MIAMI-DADE COUNTY
BUILDING CODE COMPLIANCE OFFICE (BCCO)
PRODUCT CONTROL DIVISION

MIAMI-DADE COUNTY, FLORIDA
METRO-DADE FLAGLER BUILDING
140 WEST FLAGLER STREET, SUITE 1603
MIAMI, FLORIDA 33130-1563
(305) 375-2901 FAX (305) 375-2908
www.miamidade.gov/buildingcode

NOTICE OF ACCEPTANCE (NOA)

Crawford Tracy Corporation
3301 S. W. 13th Drive
DeerField Beach, Fl. 33442

SCOPE:
This NOA is being issued under the applicable rules and regulations governing the use of construction materials. The documentation submitted has been reviewed by Miami-Dade County Product Control Division and accepted by the Board of Rules and Appeals (BORA) to be used in Miami Dade County and other areas where allowed by the Authority Having Jurisdiction (AHJ).

This NOA shall not be valid after the expiration date stated below. The Miami-Dade County Product Control Division (In Miami Dade County) and/or the AHJ (in areas other than Miami Dade County) reserve the right to have this product or material tested for quality assurance purposes. If this product or material fails to perform in the accepted manner, the manufacturer will incur the expense of such testing and the AHJ may immediately revoke, modify, or suspend the use of such product or material within their jurisdiction. BORA reserves the right to revoke this acceptance, if it is determined by Miami-Dade County Product Control Division that this product or material fails to meet the requirements of the applicable building code.

This product is approved as described herein, and has been designed to comply with the Florida Building Code, including the High Velocity Hurricane Zone of the Florida Building Code.

DESCRIPTION: Series "Pro-Tech 7SG " Aluminum Glazed Curtain Wall System-Non Impact

APPROVAL DOCUMENT: Drawing No. **W04-105**, titled "Pro-Tech 7SG Alum Curtain Wall System (NI)", sheets 1 through 5, 5.1 and 6 through 17 of 17, dated 12/29/04 and last revised on Sep 10, 2008, prepared by Al-Farooq Corporation, signed and sealed by Dr. Humayoun Farooq, P. E., bearing the Miami-Dade County Product Control Revision stamp with the Notice of Acceptance number and expiration date by the Miami-Dade County Product Control Division.

MISSILE IMPACT RATING: None: Hurricane Protection System, complying with FBC is required.

1. Installation to steel structure is limited to approved in NOA. Embedded steel stud not a part of this approval.
2. Min ¼" metal thickness is required for installation into Metal substrate.

LABELING: Each unit shall bear a permanent label with the manufacturer's name or logo, city, state and following statement: "Miami-Dade County Product Control Approved", unless otherwise noted herein.

RENEWAL of this NOA shall be considered after a renewal application has been filed and there has been no change in the applicable building code negatively affecting the performance of this product.

TERMINATION of this NOA will occur after the expiration date or if there has been a revision or change in the materials, use, and/or manufacture of the product or process. Misuse of this NOA as an endorsement of any product, for sales, advertising or any other purposes shall automatically terminate this NOA. Failure to comply with any section of this NOA shall be cause for termination and removal of NOA.

ADVERTISEMENT: The NOA number preceded by the words Miami-Dade County, Florida, and followed by the expiration date may be displayed in advertising literature. If any portion of the NOA is displayed, then it shall be done in its entirety.

INSPECTION: A copy of this entire NOA shall be provided to the user by the manufacturer or its distributors and shall be available for inspection at the job site at the request of the Building Official.

This NOA **revises** NOA # **05-0301.01** consists of this page 1 and evidence page E-1, as well as approval document mentioned above.

The submitted documentation was reviewed by **Ishaq I. Chanda, P.E.**

MIAMI-DADE COUNTY APPROVED

11/12/18

Crawford Tracy Corporation

NOTICE OF ACCEPTANCE: EVIDENCE SUBMITTED

A. DRAWINGS

1. Manufacturer's die drawings and sections.
2. Drawing No. **W04-105**, titled "Pro-Tech 7SG Alum Curtain Wall System (NI)" sheets 1 through 5, 5.1 and 6 through 17 of 17, dated 12/29/04 and last revised on Sep 10, 2008, prepared by AL-Farooq Corporation, signed and sealed by Humayoun Farooq, P. E.

B. TESTS

1. Test reports on 1) Air Infiltration Test, per TAS 202-94
   2) Uniform Static Air Pressure Test, Loading per TAS 202-94
   3) Water Resistance Test, per TAS 202-94
   Along with installation diagram of aluminum glazed curtain wall system marked-up by American Test Lab of South Florida. Test Report No. **ATL 0726.01-04**, dated 08-23-04 and last revised on 03/10/2006, signed and sealed by William R. Mehner, P.E.
2. Test reports on 1) Uniform Static Air Pressure Test, Loading per TAS 202-94 Along with installation diagram of aluminum glazed curtain wall system marked-up by American Test Lab of South Florida, Test Report No. **ATL 0419.02-04**, dated 08-19-04 signed & sealed by William R. Mehner, P.E.
3. Test reports on 1) Uniform Static Air Pressure Test, Loading per TAS 202-94 Along with installation diagram of aluminum glazed curtain wall system marked-up by American Test Lab of South Florida, Test Report No. **ATL 1129.01-04**, dated 01-05-05 signed & sealed by William R. Mehner, P.E.
4. Additional Test report **ATL-1130.01-07** dated 01/29/08 for insulated glazed C.W. Sys per TAS 201, 202 & 203, issued by American Test Lab, signed & sealed by William R. Mehner, P.E. & Henry Hatem, P. E.

C. CALCULATIONS

1. Anchor calculations and structural analysis, dated 03-17-08 and revised on 09/08/2008, prepared by Al-Farooq Corporation, signed and sealed by Humayoun Farooq, P. E.
2. Glazing complies w/ ASTME-1300-02 &-2004

D. QUALITY ASSURANCE BY:

1. Miami-Dade County Code Compliance Office (BCCO)

E. MATERIAL CERTIFICATIONS

1. None

F. STATEMENTS

1. Statement letter of conformance to FBC& "No financial interest", both dated 03-06-08, signed by Dr. Humayoun Farooq, P. E.
2. Letters of compliance, (statements of compliance stated in above test reports)

G. OTHER

1. This NOA **revises** NOA # **05-0301.01,** expiring September 14, 2011.
2. Test proposals dated 11/06/2003 & 08/27/07, approved by BCCO.
3. Other associated NOA(s) with this file are NOA(s) # 08-0415.04 & # 08-0415.06.

Ishaq I. Chanda

Ishaq I. Chanda, P.E.
Product Control Examiner
NOA No 08-0415.04
Expiration Date: September 14, 2011
Approval Date: November 27, 2008

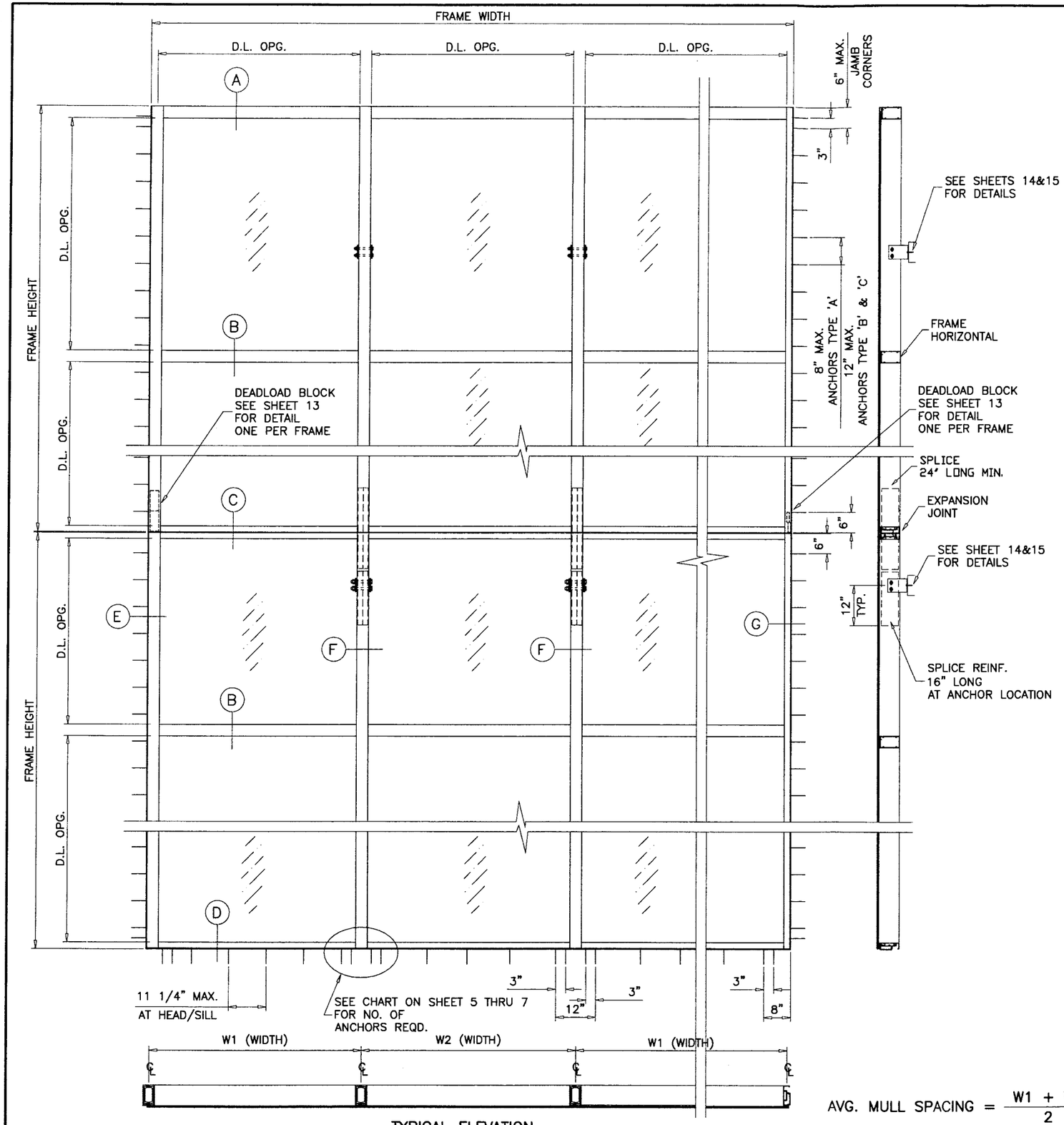

TYPICAL ELEVATION

AVG. MULL SPACING = $\frac{W1 + W2}{2}$

PRO-TECH 7SG ALUM CURTAIN WALL SYSTEM

THIS SYSTEM IS NOT RATED FOR IMPACT.

MIAMI-DADE COUNTY APPROVED IMPACT RESISTANT SHUTTERS ARE REQUIRED.

SEE SHEETS 2 THRU 7 FOR DESIGN LOAD RATING.

CODE REQUIREMENTS FOR SAFEGUARDS MUST BE OBSERVED.

THIS PRODUCT HAS BEEN DESIGNED AND TESTED TO COMPLY WITH THE REQUIREMENTS OF THE FLORIDA BUILDING CODE 2004/2007 EDITION INCLUDING HIGH VELOCITY HURRICANE ZONE (HVHZ).

WOOD BUCKS BY OTHERS, MUST BE ANCHORED PROPERLY TO TRANSFER LOADS TO THE STRUCTURE.

ANCHORS SHALL BE AS LISTED, SPACED AS SHOWN ON DETAILS, ANCHORS EMBEDMENT TO BASE MATERIAL SHALL BE BEYOND WALL DRESSING OR STUCCO.

ANCHORING OR LOADING CONDITIONS NOT SHOWN IN THESE DETAILS ARE NOT PART OF THIS APPROVAL.

A LOAD DURATION INCREASE IN ALLOWABLE STRESS IS USED IN DESIGN OF ANCHORS INTO WOOD ONLY.

MATERIALS INCLUDING BUT NOT LIMITED TO STEEL/METAL SCREWS, THAT COME INTO CONTACT WITH OTHER DISSIMILAR MATERIALS SHALL MEET THE REQUIREMENTS OF 2004/2007 FLORIDA BLDG. CODE SECTION 2003.8.4.

INSTRUCTIONS:

USE CHARTS AS FOLLOWS.

STEP 1 DETERMINE DESIGN WIND LOAD REQUIREMENT BASED ON WIND VELOCITY, BLDG. HEIGHT, WIND ZONE USING APPLICABLE ASCE 7 STANDARD.

STEP 2 CHECK MULLION CAPACITY FOR A GIVEN SPACING AND HEIGHT USING CHARTS ON SHEET 2 FOR SINGLE SPANS, AND CHARTS ON SHEET 3 FOR EQUAL MULTIPLE SPANS.

STEP 3 SEE CHART ON SHEET 4 FOR DESIGN LOAD CAPACITY OF DESIRED GLASS SIZE.

STEP 4 USING CHART ON SHEET 5 THRU 7 SELECT ANCHOR OPTION WITH DESIGN RATING MORE THAN DESIGN LOAD SPECIFIED IN STEP 1 ABOVE.

STEP 5 FOR CURTAIN WALL INTERMEDIATE ANCHOR CAPACITY SEE SHEETS 14 AND 15.

STEP 6 THE LOWEST VALUE RESULTING FROM STEPS 2, 3, 4 AND 5 SHALL APPLY TO ENTIRE SYSTEM.

MONOLITHIC GLASS
MONOLITHIC INSULATING GLASS
NON- IMPACT

Engr: DR. HUMAYOUN FAROOQ
STRUCTURES
FLA. PE # 16557
C.A.N. 3538

SEP 10 2008

PRODUCT REVISED
as complying with the Florida Building Code
Acceptance No 08-0415.04
Expiration Date Sep 14, 2011
By Ishaq I. Chanda
Miami Dade Product Control Division

AL-FAROOQ CORPORATION
ENGINEERS & PRODUCT DEVELOPMENT
1235 S.W. 87 AVE
MIAMI, FLORIDA 33174
TEL. (305) 264-8100 FAX. (305) 262-6978

STORE\W04-105CTC

PRO-TECH 7SG ALUM CURTAIN WALL SYSTEM (N.I.)

CRAWFORD TRACEY CORPORATION
3301 SW 13TH DRIVE
DEERFIELD BEACH, FL. 33442-8101
TEL. (954) 698-6888 FAX. (954) 698-6889

revisions:

no	date	by	description
A	09.16.05		UPDATED FOR 2004 FBC
B	02.08.06		REV. PER BCCO COMMENTS
C	02.28.08		NOTES REV.
D	06.19.08		REV. PER BCCO COMMENTS
E	08.19.08		NO CHANGE THIS SHEET

date: 12-30-04
scale: 3/8"=1'-0"
dr. by: HAMID
chk. by:

drawing no.
W04-105

MULLION LOAD CAPACITY - PSF
SINGLE SPANS (WITH OR WITHOUT INTERMEDIATE HORIZONTALS)

NOMINAL DIMS.		UNREINFORCED	ALUM REINF.	STEEL REINF.
WIDTH (W)	FRAME HEIGHT	EXT.(+) & INT.(−)	EXT.(+) & INT.(−)	EXT.(+) & INT.(−)
36"	120"	166.4	200.0	200.0
39"		153.6	200.0	200.0
42"		142.7	200.0	200.0
45"		133.1	200.0	200.0
48"		124.8	200.0	200.0
51"		117.5	197.4	200.0
54"		111.0	186.4	200.0
57"		105.1	176.6	198.3
60"		99.9	167.8	188.4
63"		–	159.8	179.4
66"		–	152.5	171.2
69"		–	145.9	163.8
72"		–	139.8	157.0
36"	126"	–	200.0	200.0
39"		–	200.0	200.0
42"		–	200.0	200.0
45"		–	193.2	200.0
48"		–	181.2	200.0
51"		–	170.5	200.0
54"		–	161.0	189.8
57"		–	152.6	179.8
60"		–	144.9	170.8
63"		–	138.0	162.7
66"		–	131.8	155.3
69"		–	126.0	148.6
72"		–	120.8	142.4
36"	132"	–	200.0	200.0
39"		–	193.9	200.0
42"		–	180.1	200.0
45"		–	168.1	200.0
48"		–	157.6	194.6
51"		–	148.3	183.1
54"		–	140.1	173.0
57"		–	132.7	163.9
60"		–	126.0	155.7
63"		–	120.0	148.3
66"		–	114.6	141.5
69"		–	109.6	135.4
72"		–	105.0	129.7
36"	138"	–	183.9	200.0
39"		–	169.7	200.0
42"		–	157.6	200.0
45"		–	147.1	189.9
48"		–	137.9	178.0
51"		–	129.8	167.6
54"		–	122.6	158.3
57"		–	116.1	149.9
60"		–	110.3	142.4
63"		–	105.1	135.6
66"		–	100.3	129.5
69"		–	95.9	123.9
72"		–	91.9	118.7

MULLION LOAD CAPACITY - PSF
SINGLE SPANS (WITH OR WITHOUT INTERMEDIATE HORIZONTALS)

NOMINAL DIMS.		UNREINFORCED	ALUM REINF.	STEEL REINF.
WIDTH (W)	FRAME HEIGHT	EXT.(+) & INT.(−)	EXT.(+) & INT.(−)	EXT.(+) & INT.(−)
36"	144"	–	161.8	200.0
39"		–	149.4	200.0
42"		–	138.7	186.9
45"		–	129.5	174.4
48"		–	121.4	163.5
51"		–	114.2	153.9
54"		–	107.9	145.3
57"		–	102.2	137.7
60"		–	97.1	130.8
63"		–	92.5	124.6
66"		–	88.3	118.9
69"		–	84.4	113.7
36"	150"	–	143.2	200.0
39"		–	132.2	185.5
42"		–	122.7	172.2
45"		–	114.5	160.7
48"		–	107.4	150.7
51"		–	101.1	141.8
54"		–	95.4	133.9
57"		–	90.4	126.9
60"		–	85.9	120.6
63"		–	81.8	114.8
66"		–	78.1	109.6
36"	156"	–	127.3	185.8
39"		–	117.5	171.5
42"		–	109.1	159.2
45"		–	101.8	148.6
48"		–	95.5	139.3
51"		–	89.8	131.1
54"		–	84.8	123.8
57"		–	80.4	117.3
60"		–	76.4	111.5
63"		–	72.7	106.1
36"	162"	–	113.6	172.3
39"		–	104.9	159.0
42"		–	97.4	147.6
45"		–	90.9	137.8
48"		–	85.2	129.2
51"		–	80.2	121.6
54"		–	75.8	114.8
57"		–	71.8	108.8
60"		–	68.2	103.4
36"	168"	–	101.9	160.2
39"		–	94.1	147.9
42"		–	87.3	137.3
45"		–	81.5	128.1
48"		–	76.4	120.1
51"		–	71.9	113.1
54"		–	67.9	106.8
57"		–	64.4	101.2
60"		–	61.1	96.1

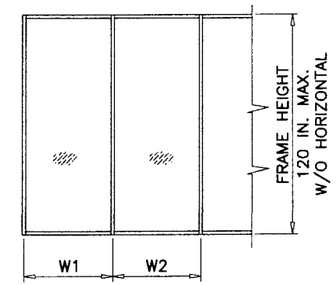

WIDTH (W) = W1
AT FRAME JAMB

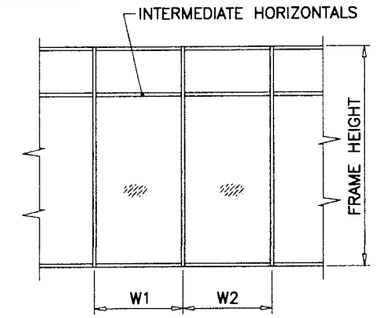

WIDTH (W) = $\frac{W1 + W2}{2}$
AT FRAME MULLION

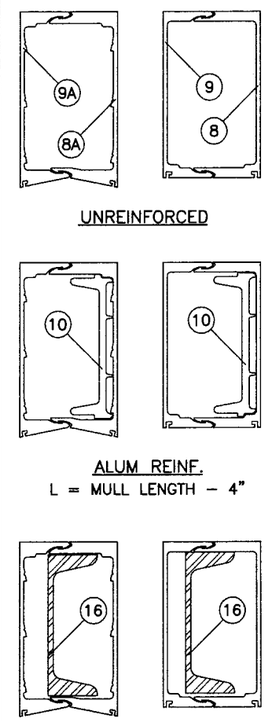

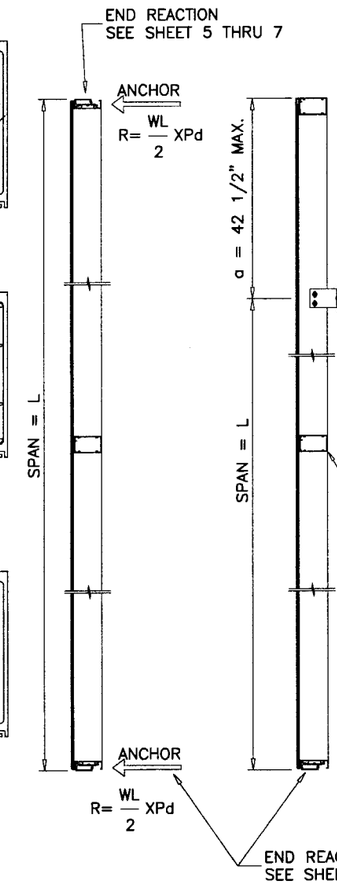

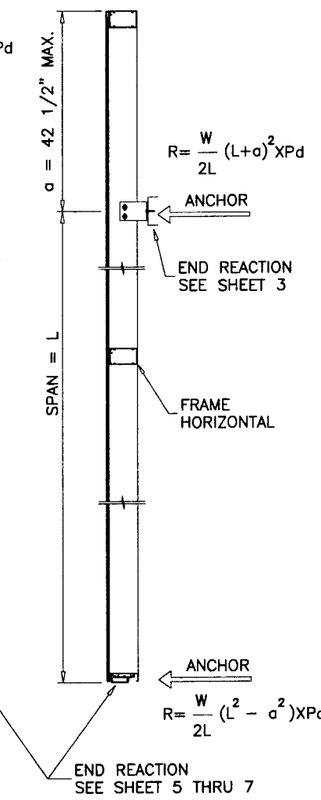

Engr: DR. HUMAYOUN FAROOQ
STRUCTURES
FLA. PE # 16557
C.A.N. 3538

SEP 10 2008

PRODUCT REVISED
as complying with the Florida Building Code
Acceptance No 06-0415.04
Expiration Date SEP 14, 2011
By Shaq I. Chunda
Miami Dade Product Control Division

AL-FAROOQ CORPORATION
ENGINEERS & PRODUCT DEVELOPMENT
1235 S.W. 87 AVE
MIAMI, FLORIDA 33174
TEL. (305) 264-8100 FAX. (305) 262-6978

STORE\W04-105CTC

PRO-TECH 7SG ALUM CURTAIN WALL SYSTEM (N.I.)

CRAWFORD TRACEY CORPORATION
3301 SW 13TH DRIVE
DEERFIELD BEACH, FL. 33442-8101
TEL. (954) 698-6888 FAX. (954) 698-6889

revisions:

no	date	by	description
A	09.16.05		REV. PER BCCO COMMENTS
B	02.08.06		REV. PER BCCO COMMENTS
C	02.28.08		NO CHANGE THIS SHEET
D	06.19.08		REV. PER BCCO COMMENTS
E	08.19.08		NO CHANGE THIS SHEET

date: 12-30-04
scale: 3/8"=1'-0"
dr. by: HAMID
chk. by:

drawing no.
W04-105

MULLION LOAD CAPACITY - PSF
MULTIPLE SPANS

AVG. MULL SPACING	SPAN = L	UNREINFORCED EXT.(+)/INT.(−)	ALUM REINF. EXT.(+)/INT.(−)
36"	120"	194.5	200.0
42"		166.7	192.0
48"		145.8	168.0
54"		129.6	149.0
60"		116.7	134.0
66"		106.1	122.0
72"		97.2	112.0
36"	126"	183.5	200.0
42"		157.3	183.0
48"		137.6	160.0
54"		122.3	142.0
60"		110.1	128.0
66"		100.1	116.0
72"		91.7	107.0
36"	132"	174.0	200.0
42"		149.1	175.0
48"		130.5	153.0
54"		116.0	136.0
60"		104.4	122.0
66"		94.9	111.0
72"		87.0	102.0
36"	138"	165.5	195.0
42"		141.9	167.0
48"		124.1	146.0
54"		110.3	130.0
60"		99.3	117.0
66"		90.3	106.0
72"		82.8	97.0
36"	144"	157.8	187.0
42"		135.3	160.0
48"		118.4	140.0
54"		105.2	124.0
60"		94.7	112.0
66"		86.1	102.0
36"	150"	150.9	179.0
42"		129.3	154.0
48"		113.2	134.0
54"		100.6	119.0
60"		90.5	108.0
66"		82.3	98.0
36"	156"	144.5	172.0
42"		123.9	148.0
48"		108.4	129.0
54"		96.3	115.0
60"		86.7	103.0
36"	162"	138.7	166.0
42"		118.9	142.0
48"		104.0	124.0
54"		92.5	111.0
60"		83.2	100.0
36"	168"	132.5	160.0
42"		113.6	137.0
48"		99.4	120.0
54"		88.4	107.0
60"		79.5	96.0

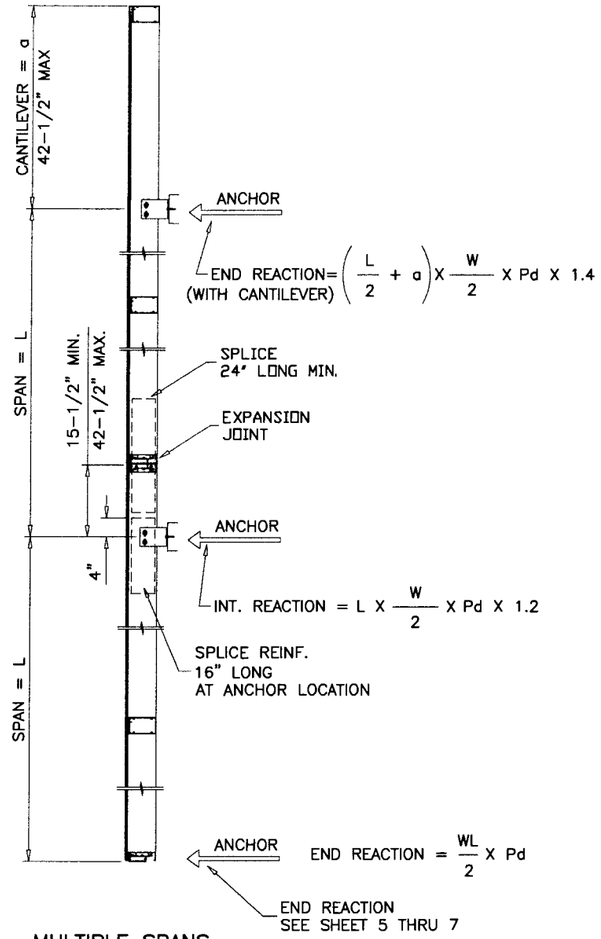

MULTIPLE SPANS

MULTIPLE SPANS WITH OR WITHOUT CANTILEVER
USE TABLE ON THIS SHEET.

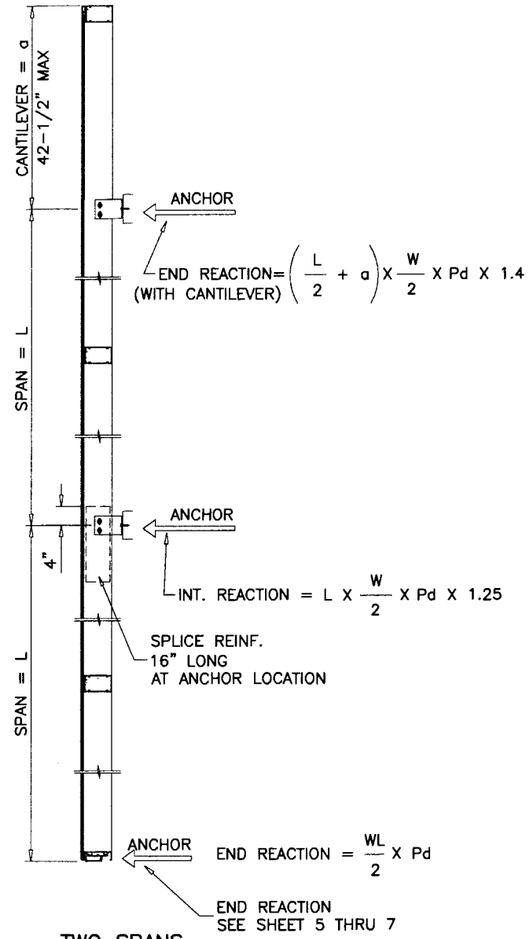

TWO SPANS

TWO SPANS WITH CANTILEVER
AND WITHOUT SPLICE/EXPANSION JOINT
USE TABLE ON THIS SHEET.

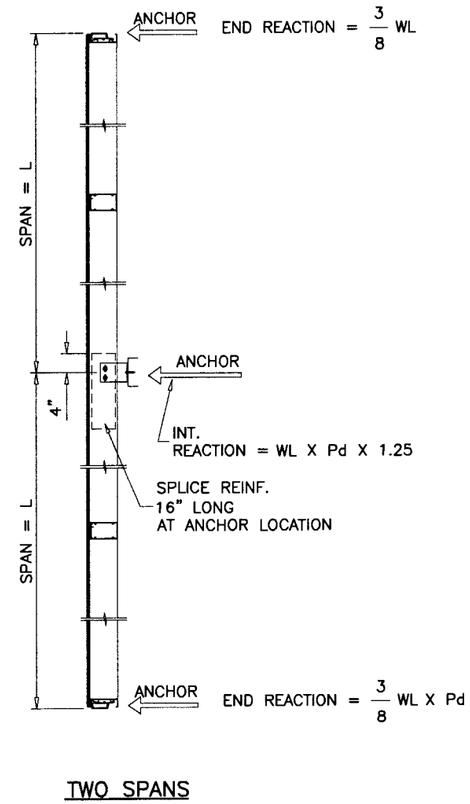

TWO SPANS

TWO SPANS WITHOUT CANTILEVER
AND WITHOUT SPLICE/EXPANSION JOINT
USE TABLE ON THIS SHEET.

UNEQUAL SPANS TO BE CHECKED ON JOB TO JOB BASIS

END REACTIONS MAY CHANGE WITH LOCATION OF
EXPANSION JOINT AND LENGTH OF CANTILEVER
WORST CONDITION SHOWN.

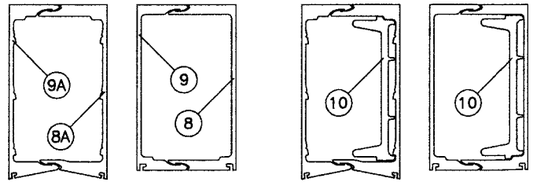

UNREINFORCED

ALUM REINF.
L = MULL LENGTH − 4"

NOTE:
TWO SPANS CONTINUOUS MULLION WITHOUT
OVERHANG CAN BE INSTALLED.
FOR EACH SPAN USE TABLE ON THIS SHEET.

Engr: DR. HUMAYOUN FAROOQ
STRUCTURES
FLA. PE # 16557
C.A.N. 3538

SEP 10 2008

PRODUCT REVISED
as complying with the Florida Building Code
Acceptance No 08-0415.04
Expiration Date SEP 14 2011
By Ishwar J. Chandra
Miami Dade Product Control Division

AL-FAROOQ CORPORATION
ENGINEERS & PRODUCT DEVELOPMENT
1235 S.W. 87 AVE
MIAMI, FLORIDA 33174
TEL. (305) 264-8100 FAX. (305) 262-6978

STORE\W04-105CTC

PRO-TECH 7SG ALUM CURTAIN WALL SYSTEM (N.I.)

CRAWFORD TRACEY CORPORATION
3301 SW 13TH DRIVE
DEERFIELD BEACH, FL. 33442-8101
TEL. (954) 698-6888 FAX. (954) 698-6889

revisions:

no	date	by	description
A	09.16.05		REV. PER BCCO COMMENTS
B	02.08.06		REV. PER BCCO COMMENTS
C	02.28.08		NO CHANGE THIS SHEET
D	06.19.08		REV. PER BCCO COMMENTS
E	08.19.08		NO CHANGE THIS SHEET

date: 12-30-04
scale: 3/8"=1'-0"
dr. by: HAMID
chk. by:

drawing no.
W04-105

GLASS LOAD CAPACITY – PSF					
NOMINAL DIMS.		GLASS TYPE 'A'		GLASS TYPE 'A1'	
D.L.O. WIDTH	D.L.O. HEIGHT	EXT.(+)	INT.(–)	EXT.(+)	INT.(–)
42"	54"	120.0	200.0	120.0	200.0
45"		120.0	200.0	120.0	200.0
48"		120.0	200.0	120.0	200.0
51"		120.0	200.0	120.0	200.0
54"		120.0	193.5	120.0	200.0
57"		120.0	188.4	120.0	200.0
60"		120.0	182.3	120.0	200.0
63"		120.0	176.1	120.0	200.0
66"		120.0	170.0	120.0	200.0
69"		120.0	163.3	120.0	200.0
72"		120.0	156.7	120.0	200.0
42"	60"	120.0	200.0	120.0	200.0
45"		120.0	200.0	120.0	200.0
48"		120.0	199.2	120.0	200.0
51"		120.0	191.0	120.0	200.0
54"		120.0	182.3	120.0	200.0
57"		120.0	174.1	120.0	200.0
60"		120.0	165.4	120.0	200.0
63"		120.0	161.3	120.0	200.0
66"		120.0	156.7	120.0	200.0
69"		120.0	152.1	120.0	200.0
72"		120.0	147.5	120.0	200.0
42"	66"	120.0	191.0	120.0	200.0
45"		120.0	186.4	120.0	200.0
48"		120.0	181.2	120.0	200.0
51"		120.0	175.6	120.0	200.0
54"		120.0	170.0	120.0	200.0
57"		120.0	163.3	120.0	200.0
60"		120.0	156.7	120.0	200.0
63"		120.0	150.0	120.0	200.0
66"		120.0	143.4	120.0	200.0
69"		120.0	140.3	120.0	200.0
72"		120.0	136.7	120.0	200.0
42"	72"	120.0	170.5	120.0	200.0
45"		120.0	167.4	120.0	200.0
48"		120.0	164.4	120.0	200.0
51"		120.0	160.8	120.0	200.0
54"		120.0	156.7	120.0	200.0
57"		120.0	152.1	120.0	200.0
60"		120.0	147.5	120.0	200.0
63"		120.0	141.8	120.0	200.0
66"		120.0	136.7	120.0	200.0
69"		120.0	131.6	120.0	200.0
72"		120.0	126.0	120.0	200.0

GLASS LOAD CAPACITY – PSF					
NOMINAL DIMS.		GLASS TYPE 'A'		GLASS TYPE 'A1'	
D.L.O. WIDTH	D.L.O. HEIGHT	EXT.(+)	INT.(–)	EXT.(+)	INT.(–)
42"	78"	120.0	153.1	120.0	200.0
45"		120.0	150.5	120.0	200.0
48"		120.0	148.5	120.0	200.0
51"		120.0	146.4	120.0	200.0
54"		120.0	143.9	120.0	200.0
57"		120.0	140.8	120.0	200.0
60"		120.0	137.2	120.0	200.0
63"		120.0	133.1	120.0	200.0
66"		120.0	129.0	120.0	200.0
69"		120.0	124.9	120.0	200.0
72"		120.0	120.3	120.0	200.0
42"	84"	120.0	138.8	120.0	200.0
45"		120.0	136.2	120.0	200.0
48"		120.0	134.7	120.0	200.0
51"		120.0	133.6	120.0	200.0
54"		120.0	132.1	120.0	200.0
57"		120.0	130.0	120.0	200.0
60"		120.0	127.5	120.0	200.0
63"		120.0	124.4	120.0	200.0
66"		120.0	121.3	120.0	200.0
69"		117.8	117.8	120.0	200.0
72"		114.2	114.2	120.0	200.0
42"	90"	120.0	127.0	120.0	200.0
45"		120.0	124.4	120.0	200.0
48"		120.0	122.9	120.0	200.0
51"		120.0	121.9	120.0	200.0
54"		120.0	120.8	120.0	200.0
57"		119.8	119.8	120.0	200.0
60"		117.8	117.8	120.0	200.0
63"		115.7	115.7	120.0	200.0
66"		113.7	113.7	120.0	200.0
69"		110.6	110.6	120.0	200.0
72"		108.0	108.0	120.0	198.0
42"	96"	117.8	117.8	120.0	200.0
45"		114.2	114.2	120.0	200.0
48"		112.6	112.6	120.0	200.0
51"		111.6	111.6	120.0	200.0
54"		111.1	111.1	120.0	200.0
57"		110.1	110.1	120.0	200.0
60"		109.1	109.1	120.0	200.0
63"		108.0	108.0	120.0	200.0
66"		106.0	106.0	120.0	199.0
42"	102"	110.6	110.6	120.0	200.0
45"		106.0	106.0	120.0	196.0
48"		103.9	103.9	120.0	196.0
51"		102.9	102.9	120.0	196.0
54"		102.4	102.4	120.0	196.0
57"		101.9	101.9	120.0	196.0
60"		101.4	101.4	120.0	194.0
63"		100.4	100.4	120.0	190.0

GLASS LOAD CAPACITY – PSF					
NOMINAL DIMS.		GLASS TYPE 'A'		GLASS TYPE 'A1'	
D.L.O. WIDTH	D.L.O. HEIGHT	EXT.(+)	INT.(–)	EXT.(+)	INT.(–)
42"	108"	104.4	104.4	120.0	189.0
45"		99.3	99.3	120.0	183.0
48"		96.8	96.8	120.0	181.0
51"		95.2	95.2	120.0	181.0
54"		94.7	94.7	120.0	181.0
57"		94.2	94.2	120.0	181.0
60"		94.2	94.2	120.0	181.0
42"	114"	100.4	100.4	120.0	180.0
45"		94.2	94.2	120.0	172.0
48"		90.6	90.6	120.0	169.0
51"		88.6	88.6	120.0	169.0
54"		88.1	88.1	120.0	169.0
57"		87.6	87.6	120.0	169.0
42"	120"	96.8	96.8	120.0	173.0
45"		90.1	90.1	120.0	163.0
48"		86.0	86.0	120.0	156.0
51"		83.5	83.5	120.0	156.0
54"		82.4	82.4	120.0	156.0
42"	126"	94.2	94.2	120.0	166.0
45"		86.5	86.5	120.0	154.0
48"		81.9	81.9	120.0	148.0
51"		78.8	78.8	120.0	146.0
42"	132"	91.6	91.6	120.0	161.0
45"		84.0	84.0	120.0	148.0
48"		78.8	78.8	120.0	141.0
42"	138"	89.6	89.6	120.0	155.0
45"		81.9	81.9	120.0	143.0
42"	144"	88.1	88.1	120.0	151.0
45"		79.9	79.9	120.0	139.0
42"	150"	86.5	86.5	120.0	148.0
56–1/2"	116"	85.5	85.5	120.0	166.0

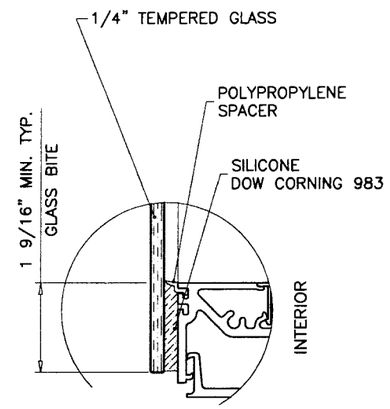

GLASS TYPE 'A'
1/4" MONOLITHIC GLASS

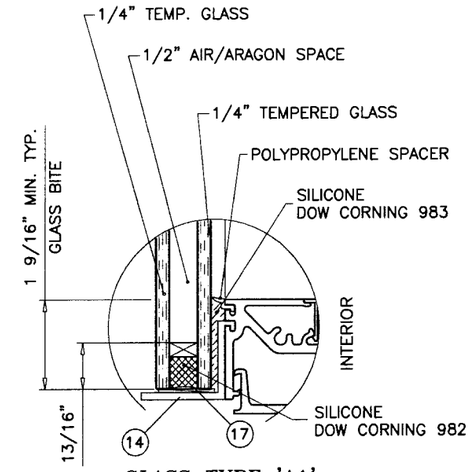

GLASS TYPE 'A1'
1" OVERALL INSUL. GLASS

GLAZING OPTIONS

NOTE:
OPTION OF .019" CERAMIC FRIT ON ROOM SIDE SURFACE OF INNER PANE GLASS.
MAX. GLASS AREA LIMITED TO 22.2 SQ. FT. WITH ASPECT RATIO EQUAL OR LESS THAN 5.

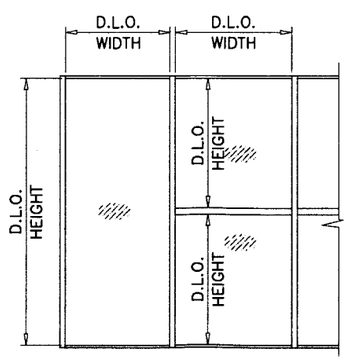

NOTE:
GLASS CAPACITIES ON THIS SHEET ARE BASED ON ASTM E1300–02/04 (3 SEC. GUSTS).

PRODUCT REVISED
as complying with the Florida Buiding Code
Acceptance No. 08-0415.04
Expiration Date SEP 14, 2011
By Ishaq I. Chand
Miami Dade Product Control Division

Engr: DR. HUMAYOUN FAROOQ
STRUCTURES
FLA. PE # 16557
C.A.N. 3538

SEP 10 2008

AL-FAROOQ CORPORATION
ENGINEERS & PRODUCT DEVELOPMENT
1235 S.W. 87 AVE
MIAMI, FLORIDA 33174
TEL. (305) 264-8100 FAX. (305) 262-6978

STORE\W04–105CTC

PRO–TECH 7SG ALUM CURTAIN WALL SYSTEM (N.I.)

CRAWFORD TRACEY CORPORATION
3301 SW 13TH DRIVE
DEERFIELD BEACH, FL. 33442–8101
TEL. (954) 698–6888 FAX. (954) 698–6889

revisions:

no	date	by	description
A	09.16.05		REV. PER BCCO COMMENTS
B	02.08.06		REV. PER BCCO COMMENTS
C	02.28.08		INSUL. GLASS ADDED
D	06.19.08		REV. PER BCCO COMMENTS
E	08.19.08		REV. PER BCCO COMMENTS

date: 12–30–04
scale: 3/8" = 1"
dr. by: HAMID
chk. by:

drawing no.
W04–105

ANCHOR LOAD CAPACITY - PSF
EXT.(+) & INT.(-)

WIDTH (W)	FRAME HEIGHT	A2	A3	A4	A5	B2	B3	B4	B5
NOMINAL DIMS.		ANCHORS TYPE 'A'				ANCHORS TYPE 'B'			
36"		83.2	124.8	166.4	200.0	96.0	144.0	192.0	200.0
39"		76.8	115.2	153.6	192.0	88.6	132.9	177.2	200.0
42"		71.3	107.0	142.6	178.3	82.3	123.4	164.6	200.0
45"		66.6	99.8	133.1	166.4	76.8	115.2	153.6	192.0
48"		62.4	93.6	124.8	156.0	72.0	108.0	144.0	180.0
51"		58.7	88.1	117.5	146.8	67.8	101.6	135.5	169.4
54"	120"	55.5	83.2	110.9	138.7	64.0	96.0	128.0	160.0
57"		52.5	78.8	105.1	131.4	60.6	90.9	121.3	151.6
60"		49.9	74.9	99.8	124.8	57.6	86.4	115.2	144.0
63"		47.5	71.3	95.1	118.9	54.9	82.3	109.7	137.1
66"		45.4	68.1	90.8	113.5	52.4	78.5	104.7	130.9
69"		43.4	65.1	86.8	108.5	50.1	75.1	100.2	125.2
72"		41.6	62.4	83.2	104.0	48.0	72.0	96.0	120.0
36"		79.2	118.9	158.5	198.1	91.4	137.1	182.9	200.0
39"		73.1	109.7	146.3	182.9	84.4	126.6	168.8	200.0
42"		67.9	101.9	135.8	169.8	78.4	117.6	156.7	195.9
45"		63.4	95.1	126.8	158.5	73.1	109.7	146.3	182.9
48"		59.4	89.1	118.9	148.6	68.6	102.9	137.1	171.4
51"		55.9	83.9	111.9	139.8	64.5	96.8	129.1	161.3
54"	126"	52.8	79.2	105.7	132.1	61.0	91.4	121.9	152.4
57"		50.0	75.1	100.1	125.1	57.7	86.6	115.5	144.4
60"		47.5	71.3	95.1	118.9	54.9	82.3	109.7	137.1
63"		45.3	67.9	90.6	113.2	52.2	78.4	104.5	130.6
66"		43.2	64.8	86.4	108.1	49.9	74.8	99.7	124.7
69"		41.3	62.0	82.7	103.4	47.7	71.6	95.4	119.3
72"		39.6	59.4	79.2	99.0	45.7	68.6	91.4	114.3
36"		75.6	113.5	151.3	189.1	87.3	130.9	174.5	200.0
39"		69.8	104.7	139.6	174.5	80.6	120.8	161.1	200.0
42"		64.8	97.2	129.7	162.1	74.8	112.2	149.6	187.0
45"		60.5	90.8	121.0	151.3	69.8	104.7	139.6	174.5
48"		56.7	85.1	113.5	141.8	65.5	98.2	130.9	163.6
51"		53.4	80.1	106.8	133.5	61.6	92.4	123.2	154.0
54"	132"	50.4	75.6	100.8	126.1	58.2	87.3	116.4	145.5
57"		47.8	71.7	95.5	119.4	55.1	82.7	110.2	137.8
60"		45.4	68.1	90.8	113.5	52.4	78.5	104.7	130.9
63"		43.2	64.8	86.4	108.1	49.9	74.8	99.7	124.7
66"		41.3	61.9	82.5	103.1	47.6	71.4	95.2	119.0
69"		39.5	59.2	78.9	98.7	45.5	68.3	91.1	113.8
72"		37.8	56.7	75.6	94.5	43.6	65.5	87.3	109.1
36"		72.3	108.5	144.7	180.9	83.5	125.2	167.0	200.0
39"		66.8	100.2	133.6	167.0	77.1	115.6	154.1	192.6
42"		62.0	93.0	124.0	155.0	71.6	107.3	143.1	178.9
45"		57.9	86.8	115.8	144.7	66.8	100.2	133.6	167.0
48"		54.3	81.4	108.5	135.7	62.6	93.9	125.2	156.5
51"		51.1	76.6	102.1	127.7	58.9	88.4	117.9	147.3
54"	138"	48.2	72.3	96.5	120.6	55.7	83.5	111.3	139.1
57"		45.7	68.5	91.4	114.2	52.7	79.1	105.4	131.8
60"		43.4	65.1	86.8	108.5	50.1	75.1	100.2	125.2
63"		41.3	62.0	82.7	103.4	47.7	71.6	95.4	119.3
66"		39.5	59.2	78.9	98.7	45.5	68.3	91.1	113.8
69"		37.7	56.6	75.5	94.4	43.6	65.3	87.1	108.9
72"		36.2	54.3	72.3	90.4	41.7	62.6	83.5	104.3

ANCHOR LOAD CAPACITY - PSF
EXT.(+) & INT.(-)

WIDTH (W)	FRAME HEIGHT	A2	A3	A4	A5	B2	B3	B4	B5
NOMINAL DIMS.		ANCHORS TYPE 'A'				ANCHORS TYPE 'B'			
36"		69.3	104.0	138.7	173.3	80.0	120.0	160.0	200.0
39"		64.0	96.0	128.0	160.0	73.8	110.8	147.7	184.6
42"		59.4	89.1	118.9	148.6	68.6	102.9	137.1	171.4
45"		55.5	83.2	110.9	138.7	64.0	96.0	128.0	160.0
48"		52.0	78.0	104.0	130.0	60.0	90.0	120.0	150.0
51"		48.9	73.4	97.9	122.4	56.5	84.7	112.9	141.2
54"	144"	46.2	69.3	92.4	115.6	53.3	80.0	106.7	133.3
57"		43.8	65.7	87.6	109.5	50.5	75.8	101.1	126.3
60"		41.6	62.4	83.2	104.0	48.0	72.0	96.0	120.0
63"		39.6	59.4	79.2	99.0	45.7	68.6	91.4	114.3
66"		37.8	56.7	75.6	94.5	43.6	65.5	87.3	109.1
69"		36.2	54.3	72.3	90.4	41.7	62.6	83.5	104.3
36"		66.6	99.8	133.1	166.4	76.8	115.2	153.6	192.0
39"		61.4	92.2	122.9	153.6	70.9	106.3	141.8	177.2
42"		57.1	85.6	114.1	142.6	65.8	98.7	131.7	164.6
45"		53.2	79.9	106.5	133.1	61.4	92.2	122.9	153.6
48"		49.9	74.9	99.8	124.8	57.6	86.4	115.2	144.0
51"	150"	47.0	70.5	94.0	117.5	54.2	81.3	108.4	135.5
54"		44.4	66.6	88.7	110.9	51.2	76.8	102.4	128.0
57"		42.0	63.1	84.1	105.1	48.5	72.8	97.0	121.3
60"		39.9	59.9	79.9	99.8	46.1	69.1	92.2	115.2
63"		38.0	57.1	76.1	95.1	43.9	65.8	87.8	109.7
66"		36.3	54.5	72.6	90.8	41.9	62.8	83.8	104.7
36"		64.0	96.0	128.0	160.0	73.8	110.8	147.7	184.6
39"		59.1	88.6	118.2	147.7	68.2	102.2	136.3	170.4
42"		54.9	82.3	109.7	137.1	63.3	94.9	126.6	158.2
45"		51.2	76.8	102.4	128.0	59.1	88.6	118.2	147.7
48"	156"	48.0	72.0	96.0	120.0	55.4	83.1	110.8	138.5
51"		45.2	67.8	90.4	112.9	52.1	78.2	104.3	130.3
54"		42.7	64.0	85.3	106.7	49.2	73.8	98.5	123.1
57"		40.4	60.6	80.8	101.1	46.6	70.0	93.3	116.6
60"		38.4	57.6	76.8	96.0	44.3	66.5	88.6	110.8
63"		36.6	54.9	73.1	91.4	42.2	63.3	84.4	105.5
36"		61.6	92.4	123.3	154.1	71.1	106.7	142.2	177.8
39"		56.9	85.3	113.8	142.2	65.6	98.5	131.3	164.1
42"		52.8	79.2	105.7	132.1	61.0	91.4	121.9	152.4
45"		49.3	74.0	98.6	123.3	56.9	85.3	113.8	142.2
48"	162"	46.2	69.3	92.4	115.6	53.3	80.0	106.7	133.3
51"		43.5	65.3	87.0	108.8	50.2	75.3	100.4	125.5
54"		41.1	61.6	82.2	102.7	47.4	71.1	94.8	118.5
57"		38.9	58.4	77.8	97.3	44.9	67.4	89.8	112.3
60"		37.0	55.5	74.0	92.4	42.7	64.0	85.3	106.7
36"		59.4	89.1	118.9	148.6	68.6	102.9	137.1	171.4
39"		54.9	82.3	109.7	137.1	63.3	94.9	126.6	158.2
42"		50.9	76.4	101.9	127.3	58.8	88.2	117.6	146.9
45"		47.5	71.3	95.1	118.9	54.9	82.3	109.7	137.1
48"	168"	44.6	66.9	89.1	111.4	51.4	77.1	102.9	128.6
51"		41.9	62.9	83.9	104.9	48.4	72.6	96.8	121.0
54"		39.6	59.4	79.2	99.0	45.7	68.6	91.4	114.3
57"		37.5	56.3	75.1	93.8	43.3	65.0	86.6	108.3
60"		35.7	53.5	71.3	89.1	41.1	61.7	82.3	102.9

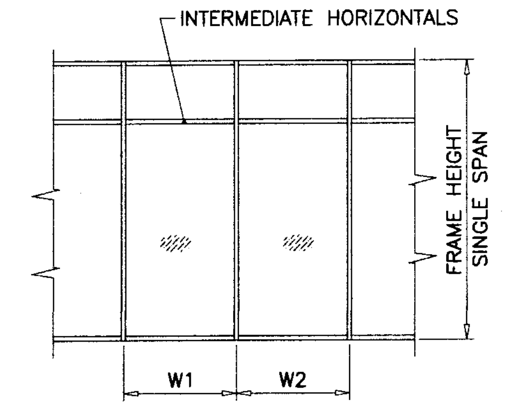

$$\text{WIDTH (W)} = \frac{W1 + W2}{2}$$

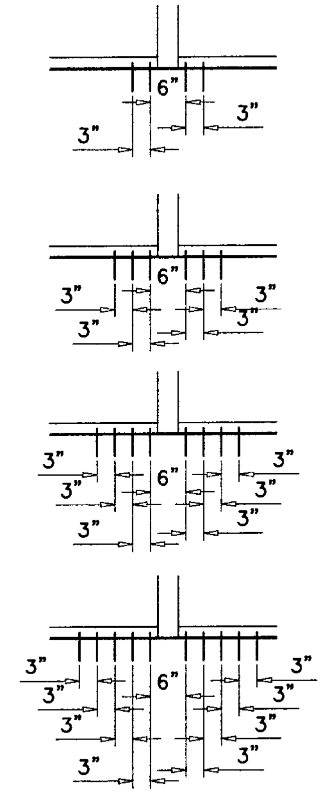

ANCHORS TYPES: SEE SHEET 9 FOR DESCRIPTION

A2 = (2) ANCHORS TYPE 'A' AT EACH SIDE OF MULLION
A3 = (3) ANCHORS TYPE 'A' AT EACH SIDE OF MULLION
A4 = (4) ANCHORS TYPE 'A' AT EACH SIDE OF MULLION
A5 = (5) ANCHORS TYPE 'A' AT EACH SIDE OF MULLION

B2 = (2) ANCHORS TYPE 'B' AT EACH SIDE OF MULLION
B3 = (3) ANCHORS TYPE 'B' AT EACH SIDE OF MULLION
B4 = (4) ANCHORS TYPE 'B' AT EACH SIDE OF MULLION
B5 = (5) ANCHORS TYPE 'B' AT EACH SIDE OF MULLION

ALL OTHER ANCHORS TO BE SPACED AS PER ELEVATION.

Engr: DR. HUMAYOUN FAROOQ
STRUCTURES
FLA. PE # 16557
C.A.N. 3538

SEP 10 2008

PRODUCT REVISED
as complying with the Florida Building Code
Acceptance No 08-0415.04
Expiration Date Sep 14, 2011
By [signature]
Miami Dade Product Control Division

AL-FAROOQ CORPORATION
ENGINEERS & PRODUCT DEVELOPMENT
1235 S.W. 87 AVE
MIAMI, FLORIDA 33174
TEL. (305) 264-8100 FAX. (305) 262-6978

STORE\W04-105CTC

PRO-TECH 7SG ALUM CURTAIN WALL SYSTEM (N.I.)

CRAWFORD TRACEY CORPORATION
3301 SW 13TH DRIVE
DEERFIELD BEACH, FL. 33442-8101
TEL. (954) 698-6888 FAX. (954) 698-6889

revisions:

no	date	by	description
A	09.16.05		REV. PER BCCO COMMENTS
B	02.08.06		REV. PER BCCO COMMENTS
C	02.28.08		NO CHANGE THIS SHEET
D	06.19.08		REV. PER BCCO COMMENTS
E	08.19.08		NO CHANGE THIS SHEET

date: 12-30-04
scale: 3/8"=1'-0"
dr. by: HAMID
chk. by:

drawing no.
W04-105

ANCHOR LOAD CAPACITY - PSF EXT.(+) & INT.(-)					
NOMINAL DIMS.		ANCHORS TYPE 'A'			
WIDTH (W)	FRAME HEIGHT	A33	A45	A66	A78
36"	120"	83.2	124.8	166.4	200.0
39"		76.8	115.2	153.6	192.0
42"		71.3	107.0	142.6	178.3
45"		66.6	99.8	133.1	166.4
48"		62.4	93.6	124.8	156.0
51"		58.7	88.1	117.5	146.8
54"		55.5	83.2	110.9	138.7
57"		52.5	78.8	105.1	131.4
60"		49.9	74.9	99.8	124.8
63"		47.5	71.3	95.1	118.9
66"		45.4	68.1	90.8	113.5
69"		43.4	65.1	86.8	108.5
72"		41.6	62.4	83.2	104.0
36"	126"	79.2	118.9	158.5	198.1
39"		73.1	109.7	146.3	182.9
42"		67.9	101.9	135.8	169.8
45"		63.4	95.1	126.8	158.5
48"		59.4	89.1	118.9	148.6
51"		55.9	83.9	111.9	139.8
54"		52.8	79.2	105.7	132.1
57"		50.0	75.1	100.1	125.1
60"		47.5	71.3	95.1	118.9
63"		45.3	67.9	90.6	113.2
66"		43.2	64.8	86.4	108.1
69"		41.3	62.0	82.7	103.4
72"		39.6	59.4	79.2	99.0
36"	132"	75.6	113.5	151.3	189.1
39"		69.8	104.7	139.6	174.5
42"		64.8	97.2	129.7	162.1
45"		60.5	90.8	121.0	151.3
48"		56.7	85.1	113.5	141.8
51"		53.4	80.1	106.8	133.5
54"		50.4	75.6	100.8	126.1
57"		47.8	71.7	95.5	119.4
60"		45.4	68.1	90.8	113.5
63"		43.2	64.8	86.4	108.1
66"		41.3	61.9	82.5	103.1
69"		39.5	59.2	78.9	98.7
72"		37.8	56.7	75.6	94.5
36"	138"	72.3	108.5	144.7	180.9
39"		66.8	100.2	133.6	167.0
42"		62.0	93.0	124.0	155.0
45"		57.9	86.8	115.8	144.7
48"		54.3	81.4	108.5	135.7
51"		51.1	76.6	102.1	127.7
54"		48.2	72.3	96.5	120.6
57"		45.7	68.5	91.4	114.2
60"		43.4	65.1	86.8	108.5
63"		41.3	62.0	82.7	103.4
66"		39.5	59.2	78.9	98.7
69"		37.7	56.6	75.5	94.4
72"		36.2	54.3	72.3	90.4

ANCHOR LOAD CAPACITY - PSF EXT.(+) & INT.(-)					
NOMINAL DIMS.		ANCHORS TYPE 'A'			
WIDTH (W)	FRAME HEIGHT	A33	A45	A66	A78
36"	144"	69.3	104.0	138.7	173.3
39"		64.0	96.0	128.0	160.0
42"		59.4	89.1	118.9	148.6
45"		55.5	83.2	110.9	138.7
48"		52.0	78.0	104.0	130.0
51"		48.9	73.4	97.9	122.4
54"		46.2	69.3	92.4	115.6
57"		43.8	65.7	87.6	109.5
60"		41.6	62.4	83.2	104.0
63"		39.6	59.4	79.2	99.0
66"		37.8	56.7	75.6	94.5
69"		36.2	54.3	72.3	90.4
36"	150"	66.6	99.8	133.1	166.4
39"		61.4	92.2	122.9	153.6
42"		57.1	85.6	114.1	142.6
45"		53.2	79.9	106.5	133.1
48"		49.9	74.9	99.8	124.8
51"		47.0	70.5	94.0	117.5
54"		44.4	66.6	88.7	110.9
57"		42.0	63.1	84.1	105.1
60"		39.9	59.9	79.9	99.8
63"		38.0	57.1	76.1	95.1
66"		36.3	54.5	72.6	90.8
36"	156"	64.0	96.0	128.0	160.0
39"		59.1	88.6	118.2	147.7
42"		54.9	82.3	109.7	137.1
45"		51.2	76.8	102.4	128.0
48"		48.0	72.0	96.0	120.0
51"		45.2	67.8	90.4	112.9
54"		42.7	64.0	85.3	106.7
57"		40.4	60.6	80.8	101.1
60"		38.4	57.6	76.8	96.0
63"		36.6	54.9	73.1	91.4
36"	162"	61.6	92.4	123.3	154.1
39"		56.9	85.3	113.8	142.2
42"		52.8	79.2	105.7	132.1
45"		49.3	74.0	98.6	123.3
48"		46.2	69.3	92.4	115.6
51"		43.5	65.3	87.0	108.8
54"		41.1	61.6	82.2	102.7
57"		38.9	58.4	77.8	97.3
60"		37.0	55.5	74.0	92.4
36"	168"	59.4	89.1	118.9	148.6
39"		54.9	82.3	109.7	137.1
42"		50.9	76.4	101.9	127.3
45"		47.5	71.3	95.1	118.9
48"		44.6	66.9	89.1	111.4
51"		41.9	62.9	83.9	104.9
54"		39.6	59.4	79.2	99.0
57"		37.5	56.3	75.1	93.8
60"		35.7	53.5	71.3	89.1

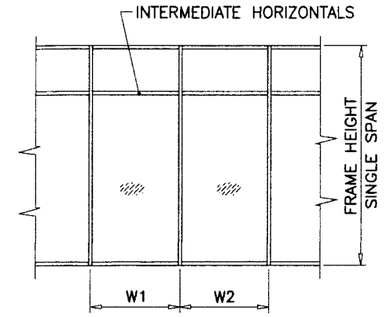

$$\text{WIDTH (W)} = \frac{W1 + W2}{2}$$

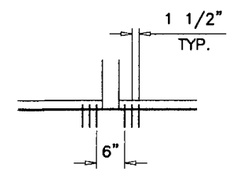

AA33

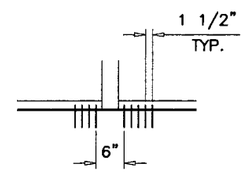

A45

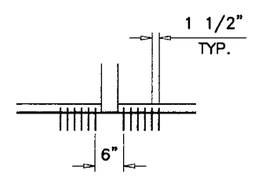

AA66

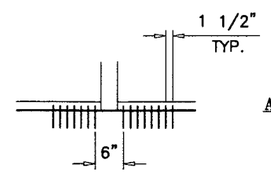

AA78

ANCHORS TYPES: SEE SHEET 9 FOR DESCRIPTION

AA33= (6) ANCHORS TYPE 'AA' AT MULLION ENDS
AA45= (9) ANCHORS TYPE 'AA' AT MULLION ENDS
AA66= (12) ANCHORS TYPE 'AA' AT MULLION ENDS
AA78= (15) ANCHORS TYPE 'AA' AT MULLION ENDS

ALL OTHER ANCHORS TO BE SPACED AS PER ELEVATION.

Engr: DR. HUMAYOUN FAROOQ
STRUCTURES
FLA. PE # 16557
C.A.N. 3538

SEP 10 2008

PRODUCT REVISED
as complying with the Florida Buiding Code
Acceptance No. 08-0415.04
Expiration Date SEP 14, 2011
By Ishaq I. Chanda
Miami Dade Product Control Division

AL-FAROOQ CORPORATION
ENGINEERS & PROJECT DEVELOPMENT
1235 S.W. 87 AVE
MIAMI, FLORIDA 33174
TEL. (305) 264-8100 FAX. (305) 262-6978

STORE\W04-105CTC

PRO-TECH 7SG ALUM CURTAIN WALL SYSTEM (N.I.)

CRAWFORD TRACEY CORPORATION
3301 SW 13TH DRIVE
DEERFIELD BEACH, FL. 33442-8101
TEL. (954) 698-6888 FAX. (954) 698-6889

revisions:			
no	date	by	description
E	08.19.08		REV. PER BCCO COMMENTS

date: 12-30-04
scale: 3/8"=1'-0"
dr. by: HAMID
chk. by:

drawing no.
W04-105

ANCHOR LOAD CAPACITY - PSF EXT.(+) & INT.(-)					
NOMINAL DIMS.		ANCHORS TYPE 'C'			
WIDTH (W)	FRAME HEIGHT	C2	C3	C4	C5
36"	120"	105.3	158.0	200.0	200.0
39"		97.2	145.8	194.5	200.0
42"		90.3	135.4	180.6	200.0
45"		84.3	126.4	168.5	200.0
48"		79.0	118.5	158.0	197.5
51"		74.4	111.5	148.7	185.9
54"		70.2	105.3	140.4	175.6
57"		66.5	99.8	133.1	166.3
60"		63.2	94.8	126.4	158.0
63"		60.2	90.3	120.4	150.5
66"		57.5	86.2	114.9	143.6
69"		55.0	82.4	109.9	137.4
72"		52.7	79.0	105.3	131.7
36"	126"	100.3	150.5	200.0	200.0
39"		92.6	138.9	185.2	200.0
42"		86.0	129.0	172.0	200.0
45"		80.3	120.4	160.5	200.0
48"		75.2	112.9	150.5	188.1
51"		70.8	106.2	141.6	177.0
54"		66.9	100.3	133.8	167.2
57"		63.4	95.0	126.7	158.4
60"		60.2	90.3	120.4	150.5
63"		57.3	86.0	114.6	143.3
66"		54.7	82.1	109.4	136.8
69"		52.3	78.5	104.7	130.8
72"		50.2	75.2	100.3	125.4
36"	132"	95.8	143.6	191.5	200.0
39"		88.4	132.6	176.8	200.0
42"		82.1	123.1	164.2	200.0
45"		76.6	114.9	153.2	191.5
48"		71.8	107.7	143.6	179.5
51"		67.6	101.4	135.2	169.0
54"		63.8	95.8	127.7	159.6
57"		60.5	90.7	121.0	151.2
60"		57.5	86.2	114.9	143.6
63"		54.7	82.1	109.4	136.8
66"		52.2	78.3	104.5	130.6
69"		50.0	74.9	99.9	124.9
72"		47.9	71.8	95.8	119.7
36"	138"	91.6	137.4	183.2	200.0
39"		84.5	126.8	169.1	200.0
42"		78.5	117.8	157.0	196.3
45"		73.3	109.9	146.6	183.2
48"		68.7	103.0	137.4	171.7
51"		64.7	97.0	129.3	161.6
54"		61.1	91.6	122.1	152.7
57"		57.8	86.8	115.7	144.6
60"		55.0	82.4	109.9	137.4
63"		52.3	78.5	104.7	130.8
66"		50.0	74.9	99.9	124.9
69"		47.8	71.7	95.6	119.5
72"		45.8	68.7	91.6	114.5

ANCHOR LOAD CAPACITY - PSF EXT.(+) & INT.(-)					
NOMINAL DIMS.		ANCHORS TYPE 'C'			
WIDTH (W)	FRAME HEIGHT	C2	C3	C4	C5
36"	144"	87.8	131.7	175.6	200.0
39"		81.0	121.5	162.1	200.0
42"		75.2	112.9	150.5	188.1
45"		70.2	105.3	140.4	175.6
48"		65.8	98.8	131.7	164.6
51"		62.0	92.9	123.9	154.9
54"		58.5	87.8	117.0	146.3
57"		55.4	83.2	110.9	138.6
60"		52.7	79.0	105.3	131.7
63"		50.2	75.2	100.3	125.4
66"		47.9	71.8	95.8	119.7
69"		45.8	68.7	91.6	114.5
36"	150"	84.3	126.4	168.5	200.0
39"		77.8	116.7	155.6	194.5
42"		72.2	108.3	144.5	180.6
45"		67.4	101.1	134.8	168.5
48"		63.2	94.8	126.4	158.0
51"		59.5	89.2	119.0	148.7
54"		56.2	84.3	112.4	140.4
57"		53.2	79.8	106.4	133.1
60"		50.6	75.8	101.1	126.4
63"		48.2	72.2	96.3	120.4
66"		46.0	68.9	91.9	114.9
36"	156"	81.0	121.5	162.1	200.0
39"		74.8	112.2	149.6	187.0
42"		69.5	104.2	138.9	173.6
45"		64.8	97.2	129.6	162.1
48"		60.8	91.2	121.5	151.9
51"		57.2	85.8	114.4	143.0
54"		54.0	81.0	108.0	135.0
57"		51.2	76.8	102.3	127.9
60"		48.6	72.9	97.2	121.5
63"		46.3	69.5	92.6	115.8
36"	162"	78.0	117.0	156.0	195.1
39"		72.0	108.0	144.0	180.1
42"		66.9	100.3	133.8	167.2
45"		62.4	93.6	124.8	156.0
48"		58.5	87.8	117.0	146.3
51"		55.1	82.6	110.2	137.7
54"		52.0	78.0	104.0	130.0
57"		49.3	73.9	98.6	123.2
60"		46.8	70.2	93.6	117.0
36"	168"	75.2	112.9	150.5	188.1
39"		69.5	104.2	138.9	173.6
42"		64.5	96.7	129.0	161.2
45"		60.2	90.3	120.4	150.5
48"		56.4	84.6	112.9	141.1
51"		53.1	79.7	106.2	132.8
54"		50.2	75.2	100.3	125.4
57"		47.5	71.3	95.0	118.8
60"		45.1	67.7	90.3	112.9

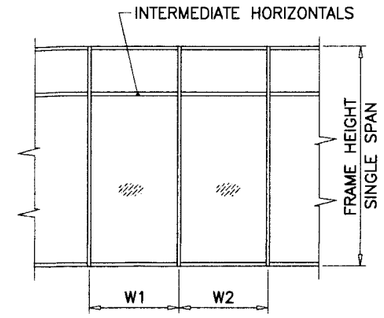

$$\text{WIDTH (W)} = \frac{W1 + W2}{2}$$

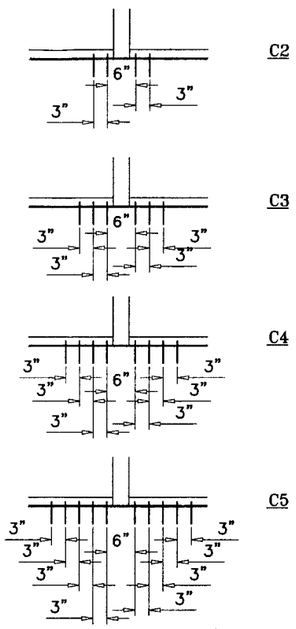

ANCHORS TYPES: SEE SHEET 9 FOR DESCRIPTION

C2 = (2) ANCHORS TYPE 'A' AT EACH SIDE OF MULLION
C3 = (3) ANCHORS TYPE 'A' AT EACH SIDE OF MULLION
C4 = (4) ANCHORS TYPE 'A' AT EACH SIDE OF MULLION
C5 = (5) ANCHORS TYPE 'A' AT EACH SIDE OF MULLION

ALL OTHER ANCHORS TO BE SPACED AS PER ELEVATION.

PRODUCT REVISED
as complying with the Florida Building Code
Acceptance No. 06-0415.04
Expiration Date SEP 14 2011
By Ishaq I. Chanda
Miami Dade Product Control Division

Engr: DR. HUMAYOUN FAROOQ
STRUCTURES
FLA. PE # 16557
C.A.N. 3538

SEP 10 2008

AL-FAROOQ CORPORATION
ENGINEERS & PRODUCT DEVELOPMENT
1235 S.W. 87 AVE
MIAMI, FLORIDA 33174
TEL. (305) 264-8100 FAX. (305) 262-6978

STORE\W04-105CTC

PRO-TECH 7SG ALUM CURTAIN WALL SYSTEM (N.I.)

CRAWFORD TRACEY CORPORATION
3301 SW 13TH DRIVE
DEERFIELD BEACH, FL. 33442-8101
TEL. (954) 698-6888 FAX. (954) 698-6889

revisions:

no	date	by	description
D	06.19.08		REV. PER BCCO COMMENTS
E	08.19.08		NO CHANGE THIS SHEET

date: 12-30-04
scale: 3/8"=1'-0"
dr. by: HAMID
chk. by:

drawing no.
W04-105

ANCHOR LOAD CAPACITY – PSF EXT.(+) & INT.(–)					
NOMINAL DIMS.		4 ANCHORS PER PLATE TYPE 'D'		6 ANCHORS PER PLATE TYPE 'D'	
WIDTH (W)	FRAME HEIGHT	2–1/4" EDGE DIST.	3–1/4" EDGE DIST.	2–1/4" EDGE DIST.	3–1/4" EDGE DIST.
36"	120"	108.7	171.8	163.0	200.0
39"		100.3	158.6	150.5	200.0
42"		93.1	147.3	139.7	200.0
45"		86.9	137.4	130.4	200.0
48"		81.5	128.9	122.3	193.3
51"		76.7	121.3	115.1	181.9
54"		72.4	114.5	108.7	171.8
57"		68.6	108.5	102.9	162.8
60"		65.2	103.1	97.8	154.6
63"		62.1	98.2	93.1	147.3
66"		59.3	93.7	88.9	140.6
69"		56.7	89.6	85.0	134.5
72"		54.3	85.9	81.5	128.9
36"	126"	103.5	163.6	155.2	200.0
39"		95.5	151.0	143.3	200.0
42"		88.7	140.2	133.1	200.0
45"		82.8	130.9	124.2	196.4
48"		77.6	122.7	116.4	184.1
51"		73.1	115.5	109.6	173.3
54"		69.0	109.1	103.5	163.6
57"		65.4	103.3	98.0	155.0
60"		62.1	98.2	93.1	147.3
63"		59.1	93.5	88.7	140.3
66"		56.5	89.2	84.7	133.9
69"		54.0	85.4	81.0	128.1
72"		51.7	81.8	77.6	122.7
36"	132"	98.8	156.2	148.2	200.0
39"		91.2	144.2	136.8	200.0
42"		84.7	133.9	127.0	200.0
45"		79.0	124.9	118.5	187.4
48"		74.1	117.1	111.1	175.7
51"		69.7	110.2	104.6	165.4
54"		65.9	104.1	98.8	156.2
57"		62.4	98.6	93.6	148.0
60"		59.3	93.7	88.9	140.6
63"		56.5	89.2	84.7	133.9
66"		53.9	85.2	80.8	127.8
69"		51.5	81.5	77.3	122.2
72"		49.4	78.1	74.1	117.2
36"	138"	94.5	149.4	141.7	200.0
39"		87.2	137.9	130.8	200.0
42"		81.0	128.0	121.5	192.1
45"		75.6	119.5	113.4	179.3
48"		70.9	112.0	106.3	168.1
51"		66.7	105.5	100.1	158.2
54"		63.0	99.6	94.5	149.4
57"		59.7	94.4	89.5	141.5
60"		56.7	89.6	85.0	134.5
63"		54.0	85.4	81.0	128.1
66"		51.5	81.5	77.3	122.2
69"		49.3	77.9	74.0	116.9
72"		47.2	74.7	70.9	112.1

ANCHOR LOAD CAPACITY – PSF EXT.(+) & INT.(–)					
NOMINAL DIMS.		4 ANCHORS PER PLATE TYPE 'D'		6 ANCHORS PER PLATE TYPE 'D'	
WIDTH (W)	FRAME HEIGHT	2–1/4" EDGE DIST.	3–1/4" EDGE DIST.	2–1/4" EDGE DIST.	3–1/4" EDGE DIST.
36"	144"	90.6	143.2	135.8	200.0
39"		83.6	132.2	125.4	198.3
42"		77.6	122.7	116.4	184.1
45"		72.4	114.5	108.7	171.8
48"		67.9	107.4	101.9	161.1
51"		63.9	101.1	95.9	151.6
54"		60.4	95.4	90.6	143.2
57"		57.2	90.4	85.8	135.6
60"		54.3	85.9	81.5	128.9
63"		51.7	81.8	77.6	122.7
66"		49.4	78.1	74.1	117.2
69"		47.2	74.7	70.9	112.1
36"	150"	86.9	137.4	130.4	200.0
39"		80.2	126.9	120.4	190.3
42"		74.5	117.8	111.8	176.7
45"		69.5	110.0	104.3	164.9
48"		65.2	103.1	97.8	154.6
51"		61.4	97.0	92.0	145.5
54"		58.0	91.6	86.9	137.5
57"		54.9	86.8	82.4	130.2
60"		52.2	82.5	78.2	123.7
63"		49.7	78.5	74.5	117.8
66"		47.4	75.0	71.1	112.5
36"	156"	83.6	132.2	125.4	198.3
39"		77.2	122.0	115.7	183.0
42"		71.6	113.3	107.5	169.9
45"		66.9	105.7	100.3	158.6
48"		62.7	99.1	94.0	148.7
51"		59.0	93.3	88.5	139.9
54"		55.7	88.1	83.6	132.2
57"		52.8	83.5	79.2	125.2
60"		50.2	79.3	75.2	119.0
63"		47.8	75.5	71.6	113.3
36"	162"	80.5	127.3	120.7	190.9
39"		74.3	117.5	111.5	176.2
42"		69.0	109.1	103.5	163.6
45"		64.4	101.8	96.6	152.7
48"		60.4	95.4	90.6	143.2
51"		56.8	89.8	85.2	134.8
54"		53.7	84.8	80.5	127.3
57"		50.8	80.4	76.3	120.6
60"		48.3	76.4	72.4	114.5
36"	168"	77.6	122.7	116.4	184.1
39"		71.6	113.3	107.5	169.9
42"		66.5	105.2	99.8	157.8
45"		62.1	98.2	93.1	147.3
48"		58.2	92.0	87.3	138.1
51"		54.8	86.6	82.2	129.9
54"		51.7	81.8	77.6	122.7
57"		49.0	77.5	73.5	116.3
60"		46.6	73.6	69.9	110.5

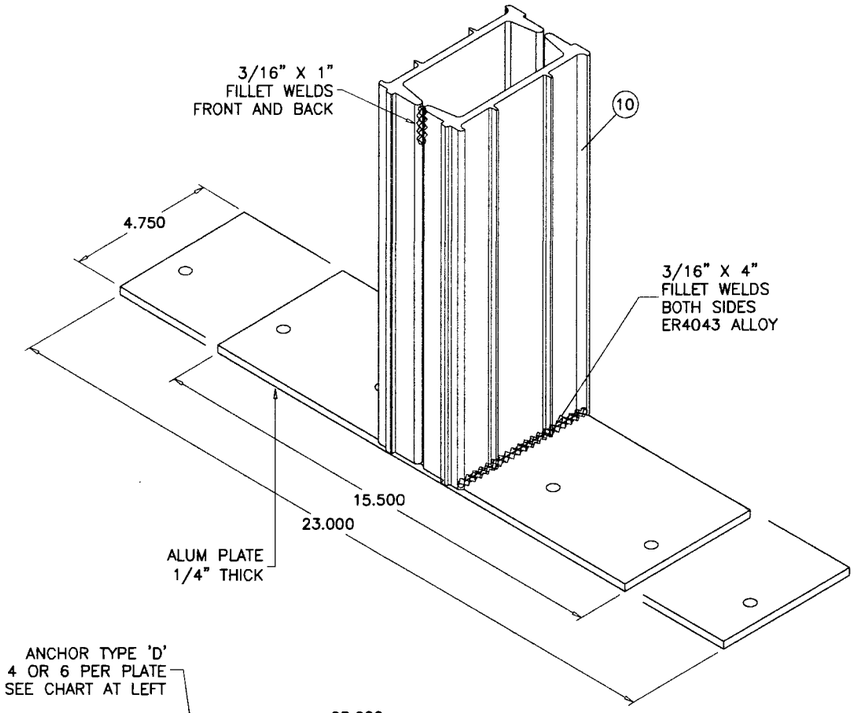

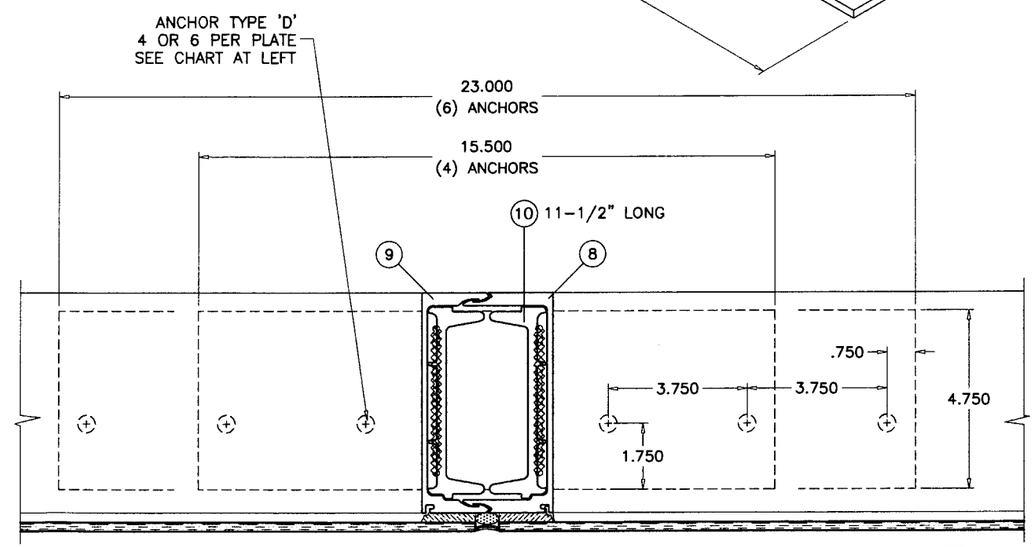

TYPICAL ANCHORS:

TYPE 'D'– 3/8" DIA. POWERS WEDGE–BOLT ANCHOR
DIRECTLY INTO CONCRETE
1–1/2" MIN. EMBED INTO CONC. (3000 PSI MIN.)
EDGE DIST. (SEE CHARTS)

PRODUCT REVISED
as complying with the Florida
Buiding Code
Acceptance No 08-0415.04
Expiration Date Sep 14, 2011
By Ishaq I. Chand
Miami Dade Product Control
Division

Engr: DR. HUMAYOUN FAROOQ
STRUCTURES
FLA. PE # 16557
C.A.N. 3536

SEP 1 0 2008

AL-FAROOQ CORPORATION
ENGINEERS & PRODUCT DEVELOPMENT
1235 S.W. 87 AVE
MIAMI, FLORIDA 33174
TEL. (305) 264-8100 FAX. (305) 262-6978

STORE\W04-105CTC

PRO-TECH 7SG ALUM CURTAIN WALL SYSTEM (N.I.)

CRAWFORD TRACEY CORPORATION
3301 SW 13TH DRIVE
DEERFIELD BEACH, FL. 33442-8101
TEL. (954) 698-6888 FAX. (954) 698-6889

revisions:

no	date	by	description
A	09.16.05		REV. PER BCCO COMMENTS
B	02.08.06		REV. PER BCCO COMMENTS
C	02.28.08		NO CHANGE THIS SHEET
D	06.19.08		REV. PER BCCO COMMENTS
E	08.19.08		NO CHANGE THIS SHEET

date: 12-30-04
scale: 1/4" = 1"
dr. by: HAMID
chk. by:

drawing no.
W04-105

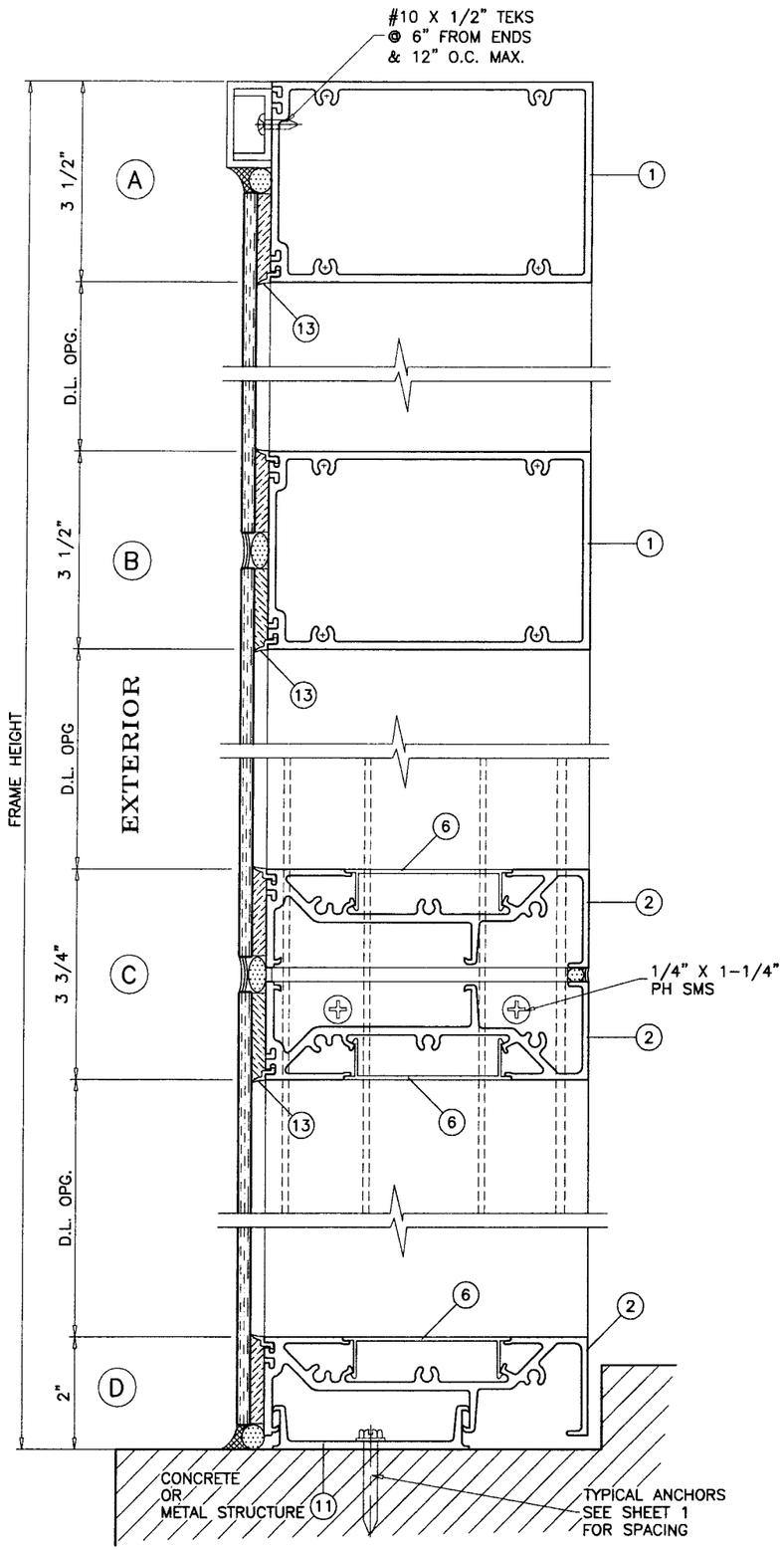

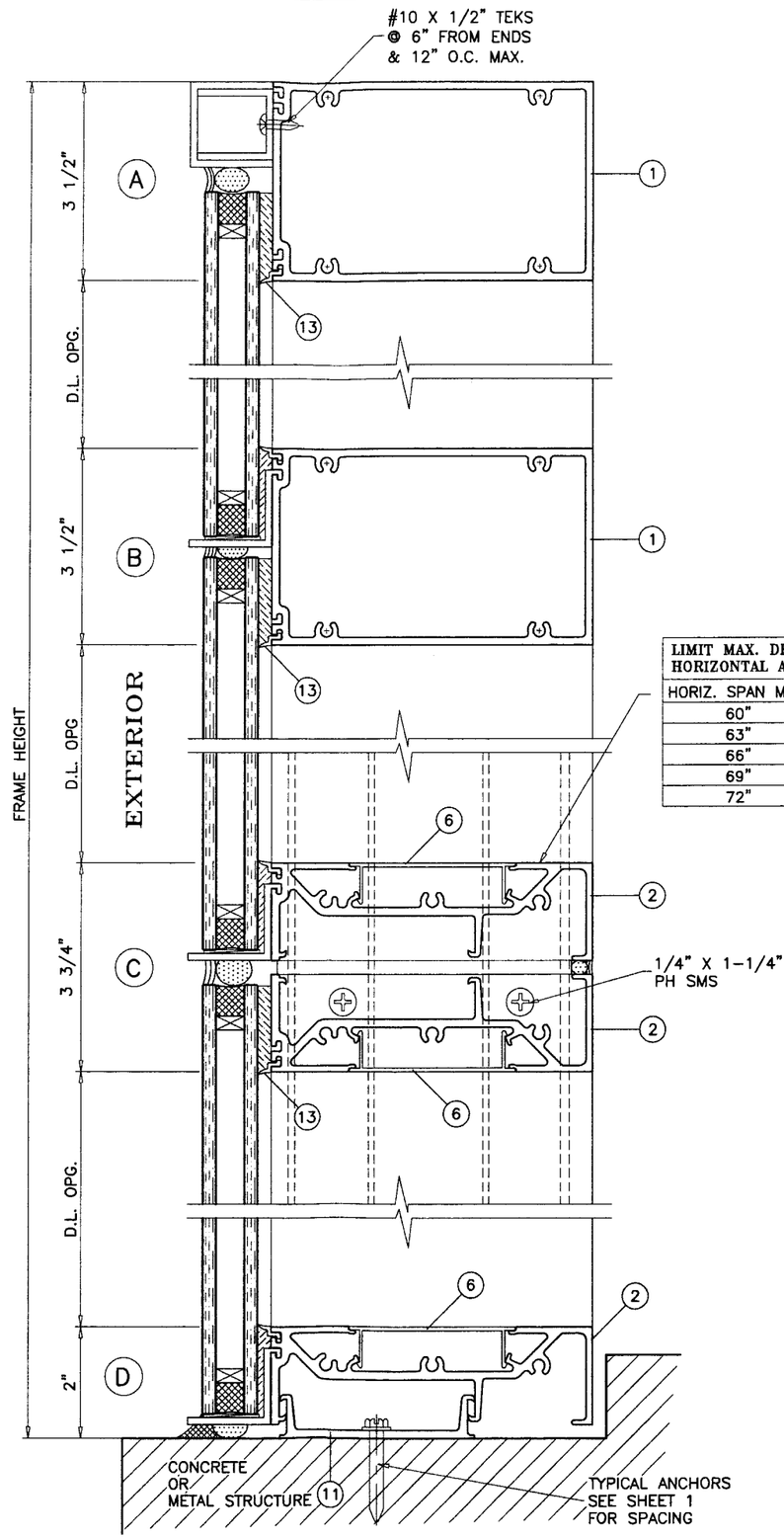

LIMIT MAX. DESIGN LOADS FOR THIS HORIZONTAL AS FOLLOWS	
HORIZ. SPAN MAX.	DESIGN LOADS
60"	200 PSF
63"	150 PSF
66"	115 PSF
69"	89 PSF
72"	70 PSF

PRODUCT REVISED
as complying with the Florida Buiding Code
Acceptance No PE-0415-04
Expiration Date SEP 14 2011
By Ishaq L. Chan Jr.
Miami Dade Product Control Division

Engr: DR. HUMAYOUN FAROOQ
STRUCTURES
FLA. PE # 16557
C.A.N. 3538

SEP 10 2008

AL-FAROOQ CORPORATION
ENGINEERS & PRODUCT DEVELOPMENT
1235 S.W. 87 AVE
MIAMI, FLORIDA 33174
TEL. (305) 264-8100 FAX. (305) 262-6978

STORE\W04-105CTC

PRO-TECH 7SG ALUM CURTAIN WALL SYSTEM (N.I.)

CRAWFORD TRACEY CORPORATION
3301 SW 13TH DRIVE
DEERFIELD BEACH, FL. 33442-8101
TEL. (954) 698-6888 FAX. (954) 698-6889

revisions:

no	date	by	description
A	09.16.05		REV. PER BCCO COMMENTS
B	02.08.06		REV. PER BCCO COMMENTS
C	02.28.08		HORIZONTALS REV.
D	06.19.08		REV. PER BCCO COMMENTS
E	08.19.08		REV. PER BCCO COMMENTS

date: 12-30-04
scale: 3/8" = 1"
dr. by: HAMID
chk. by:

drawing no.
W04-105

sheet 8 of 17

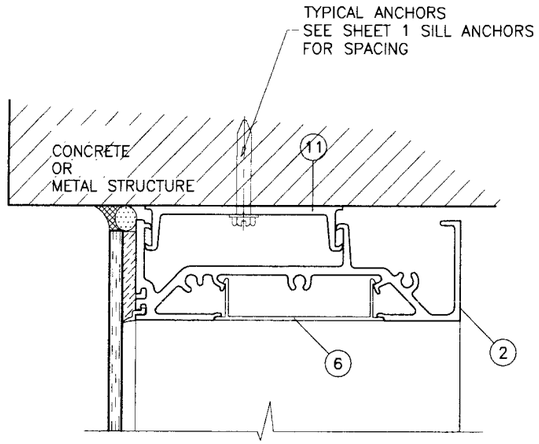

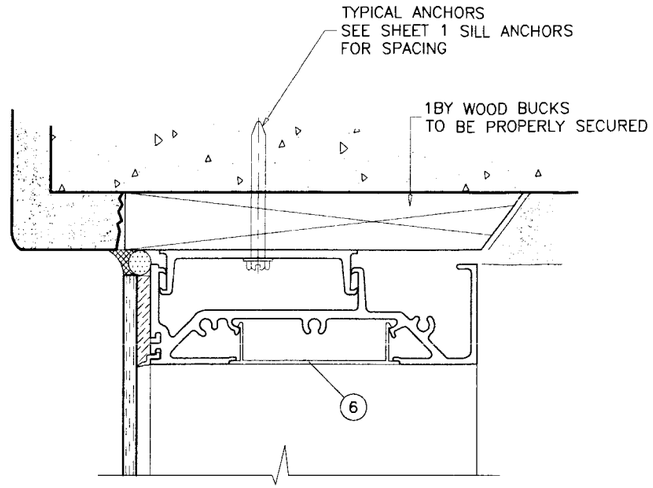

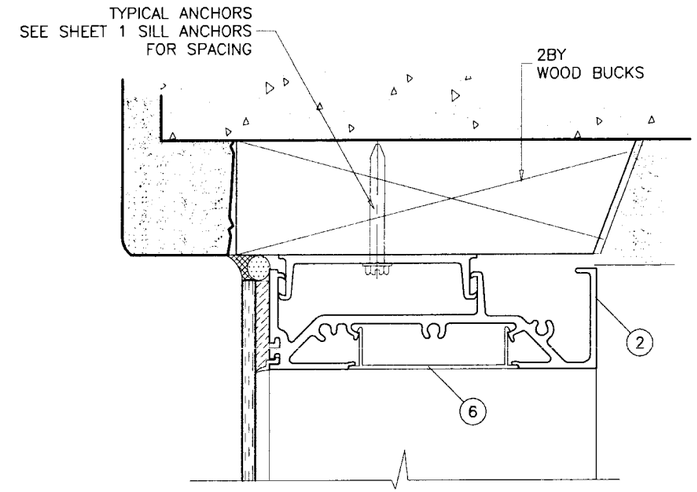

WOOD/METAL STRUCTURES NOT BY CRAWFORD TRACEY, MUST SUPPORT LOADS IMPOSED BY GLAZING SYSTEM AND TRANSFER THEM TO THE BUILDING STRUCTURE.

TYPICAL ANCHORS: SEE ELEV. FOR SPACING

TYPE 'AA'– 1/4" DIA. ULTRACON BY 'ELCO' (Fu=177 KSI, Fy=155 KSI)
INTO 2BY WOOD BUCKS OR WOOD STRUCTURES
1–1/2" MIN. PENETRATION INTO WOOD

TYPE 'A'– 1/4" DIA. ULTRACON BY 'ELCO' (Fu=177 KSI, Fy=155 KSI)
THRU 1BY BUCKS INTO CONC. OR MASONRY
1–1/4" MIN. EMBED INTO CONC. OR MASONRY

TYPE 'B'– 1/4" DIA. ULTRACON BY 'ELCO' (Fu=177 KSI, Fy=155 KSI)
DIRECTLY INTO CONC. OR MASONRY
1–1/4" MIN. EMBED INTO CONC. OR MASONRY

TYPE 'C'– 1/4" DIA KWIK–FLEX SELF DRILLING SCREWS (GRADE 5 CRS)
INTO METAL STRUCTURES
STEEL : 1/4" THK. MIN. (Fy = 36 KSI MIN.)
ALUMINUM : 1/4" THK. MIN. (6063–T5 MIN.)
(STEEL IN CONTACT WITH ALUMINUM TO BE PLATED OR PAINTED)

TYPICAL EDGE DISTANCE
INTO CONCRETE AND MASONRY = 2–1/2" MIN.
INTO WOOD STRUCTURE = 1" MIN.
INTO METAL STRUCTURE = 3/4" MIN.

CONCRETE f'c = 3000 PSI MIN. (EXCEPT AS NOTED)
MASONRY f'm = 1500 PSI MIN.

TYPE 'D'– SEE SHEET 7

Engr: DR. HUMAYOUN FAROOQ
STRUCTURES
FLA. PE # 18557
C.A.N. 3538

SEP 10 2008

PRODUCT REVISED
as complying with the Florida Buiding Code
Acceptance No 08-0415.04
Expiration Date Sep 14, 2011
By Ishaq I. Chanda
Miami Dade Product Control Division

AL-FAROOQ CORPORATION
ENGINEERS & PRODUCT DEVELOPMENT
1235 S.W. 87 AVE
MIAMI, FLORIDA 33174
TEL. (305) 264-8100 FAX. (305) 262-6978

STORE\W04–105CTC

PRO–TECH 7SG ALUM CURTAIN WALL SYSTEM (N.I.)

CRAWFORD TRACEY CORPORATION
3301 SW 13TH DRIVE
DEERFIELD BEACH, FL. 33442–8101
TEL. (954) 698–6888 FAX. (954) 698–6889

revisions:

no	date	by	description
A	09.16.05		REV. PER BCCO COMMENTS
B	02.08.06		REV. PER BCCO COMMENTS
C	02.28.08		HORIZONTALS REV.
D	06.19.08		REV. PER BCCO COMMENTS
E	08.19.08		REV. PER BCCO COMMENTS

date: 12–30–04
scale: 3/8" = 1"
dr. by: HAMID
chk. by:

drawing no.
W04–105

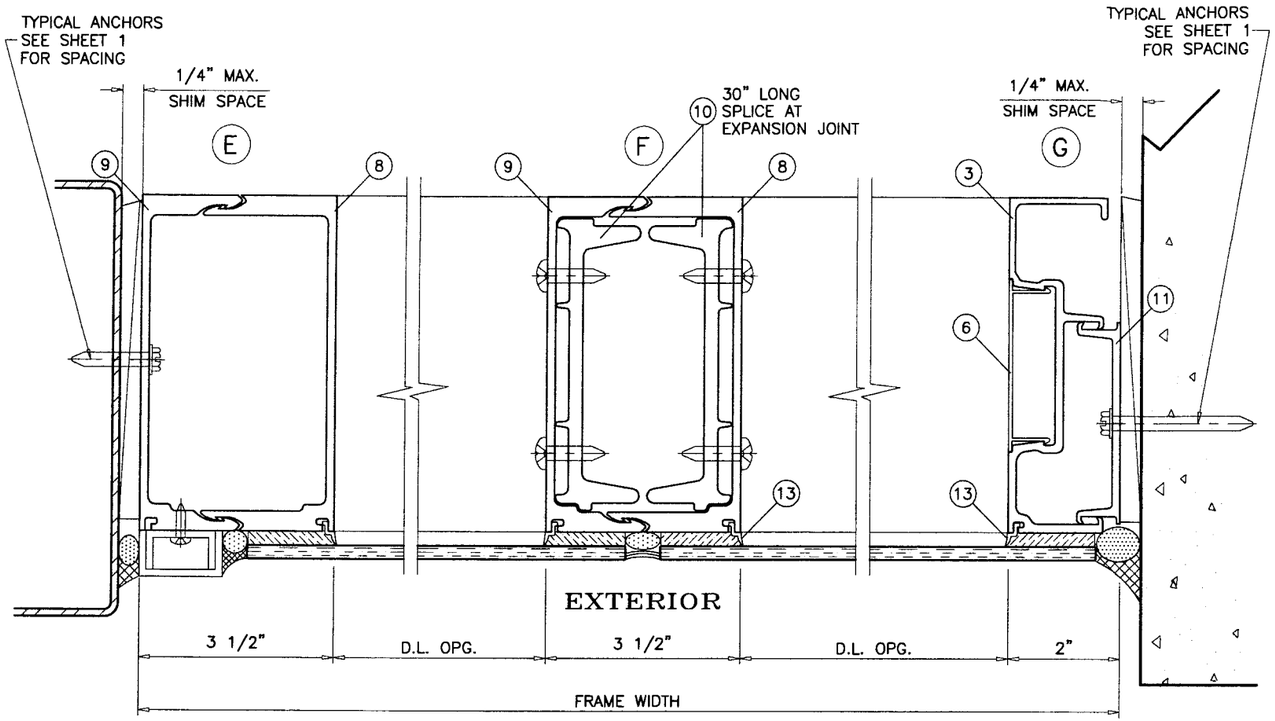

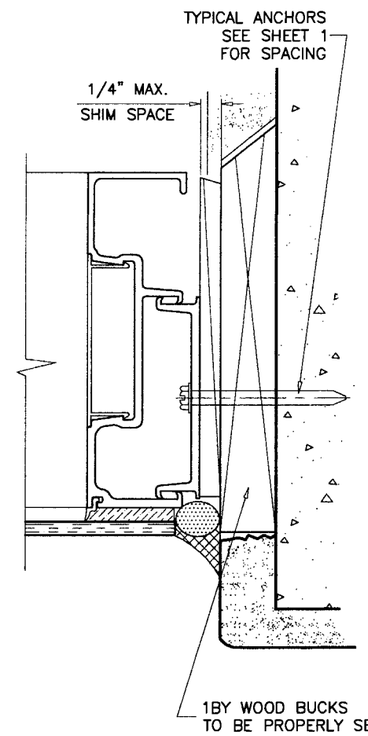

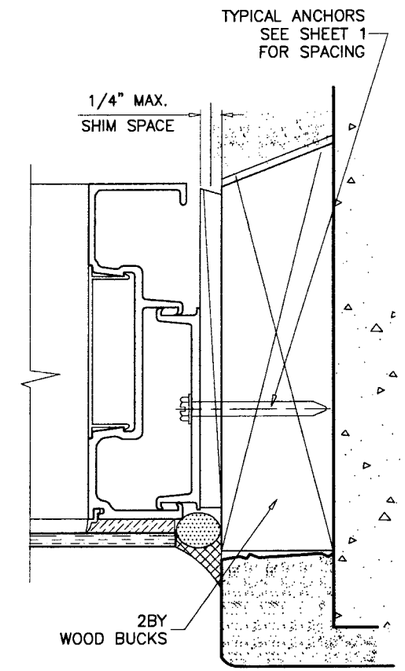

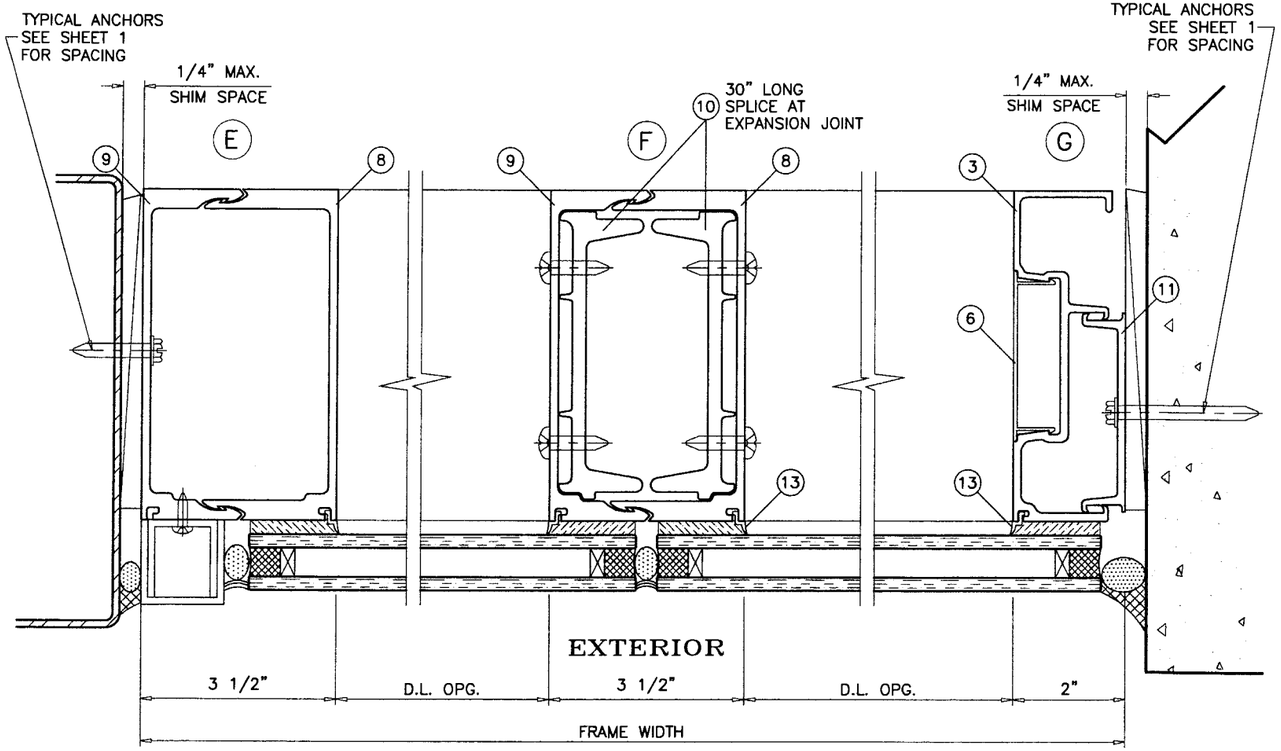

PRODUCT REVISED
as complying with the Florida
Buiding Code
Acceptance No 08-0415.04
Expiration Date SEP 14, 2011
By Ishwar V. Chauda
Miami Dade Product Control
Division

Engr: DR. HUMAYOUN FAROOQ
STRUCTURES
FLA. PE # 16557
C.A.N. 3538

SEP 10 2008

AL-FAROOQ CORPORATION
ENGINEERS & PRODUCT DEVELOPMENT
1235 S.W. 87 AVE
MIAMI, FLORIDA 33174
TEL. (305) 264-8100 FAX. (305) 262-6978

STORE\W04-105CTC

PRO-TECH 7SG ALUM CURTAIN WALL SYSTEM (N.I.)

CRAWFORD TRACEY CORPORATION
3301 SW 13TH DRIVE
DEERFIELD BEACH, FL. 33442-8101
TEL. (954) 698-6888 FAX. (954) 698-6889

revisions:

no	date	by	description
A	09.16.05		REV. PER BCCO COMMENTS
B	02.08.06		REV. PER BCCO COMMENTS
C	02.28.08		NO CHANGE THIS SHEET
D	06.19.08		REV. PER BCCO COMMENTS
E	08.19.08		REV. PER BCCO COMMENTS

date: 12-30-04
scale: 3/8" = 1"
dr. by: HAMID
chk. by:

drawing no.
W04-105

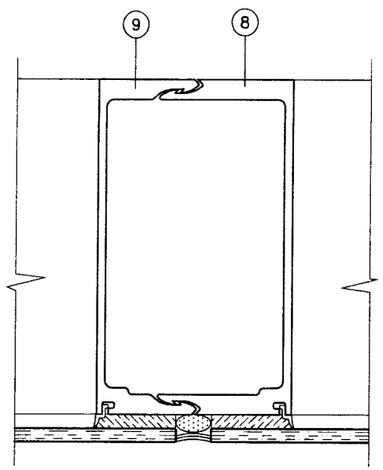

MULLION
UNREINFORCED

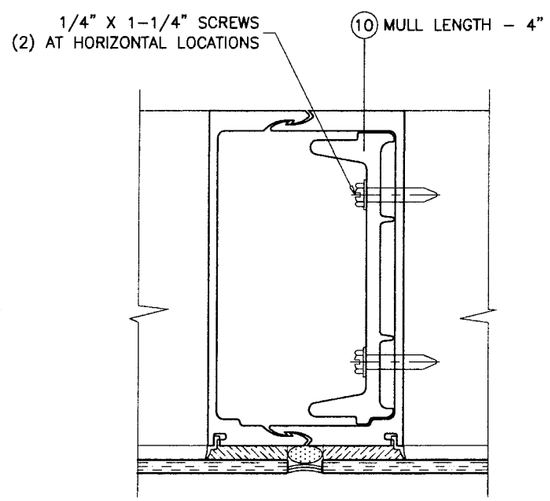

MULLION
ALUM REINFORCING

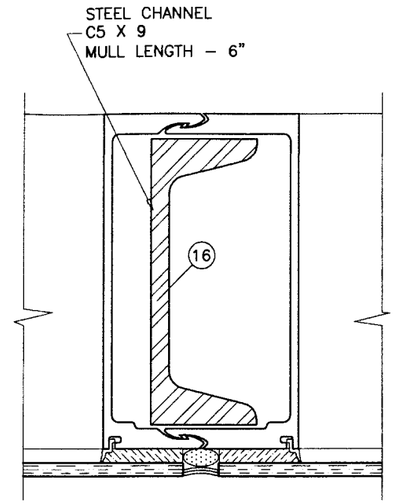

MULLION
STEEL REINFORCING

PRODUCT REVISED
as complying with the Florida
Buiding Code
Acceptance No 08-0415.04
Expiration Date SEP 14, 2011
By
Miami Dade Product Control
Division

Engr: DR. HUMAYOUN FAROOQ
STRUCTURES
FLA. PE # 16557
C.A.N. 3538

SEP 10 2008

AL-FAROOQ CORPORATION
ENGINEERS & PRODUCT DEVELOPMENT
1235 S.W. 87 AVE
MIAMI, FLORIDA 33174
TEL. (305) 264-8100 FAX. (305) 262-6978

STORE\W04-105CTC

PRO-TECH 7SG ALUM CURTAIN WALL SYSTEM (N.I.)

CRAWFORD TRACEY CORPORATION
3301 SW 13TH DRIVE
DEERFIELD BEACH, FL. 33442-8101
TEL. (954) 698-6888 FAX. (954) 698-6889

revisions:

no	date	by	description
D	06.19.08		REV. PER BCCO COMMENTS
E	08.19.08		NO CHANGE THIS SHEET

date: 12-30-04
scale: 3/8" = 1"
dr. by: HAMID
chk. by:

drawing no.
W04-105

sheet 11 of 17

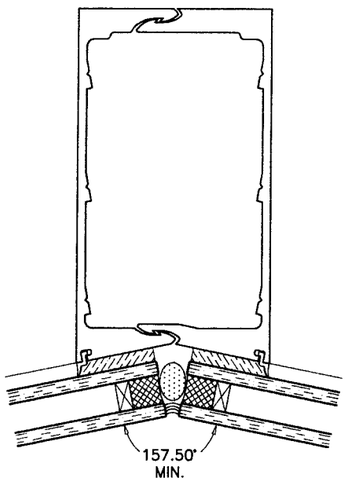

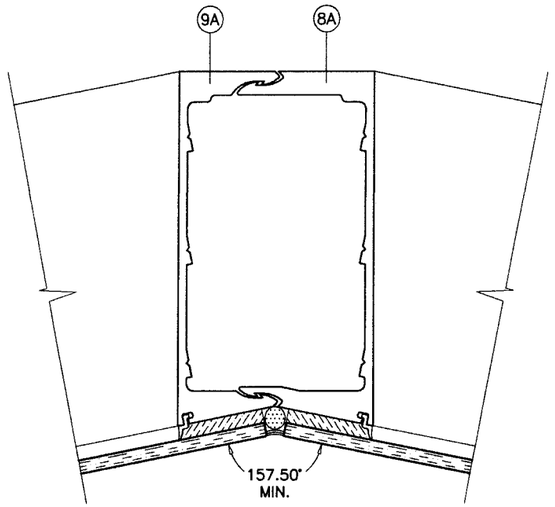

MULLION
UNREINFORCED
MAX. L = 120 IN.

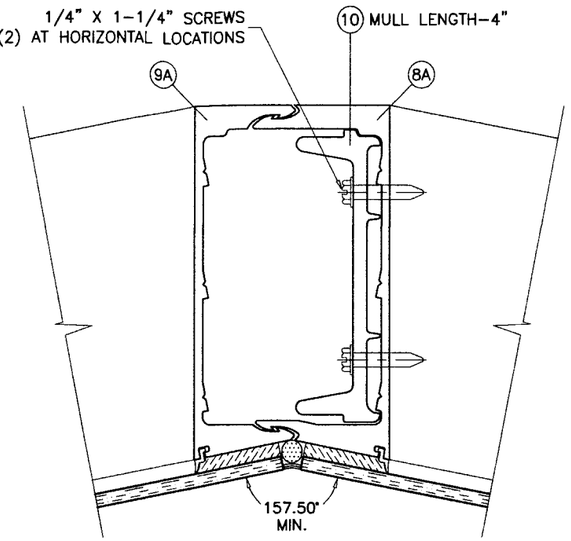

MULLION
ALUM REINFORCING

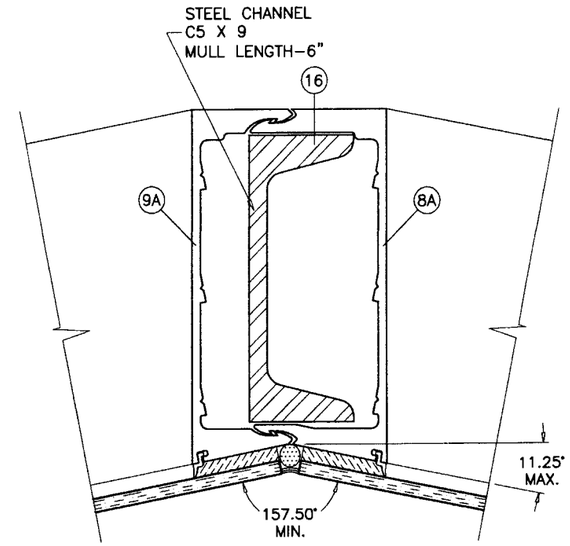

MULLION
STEEL REINFORCING

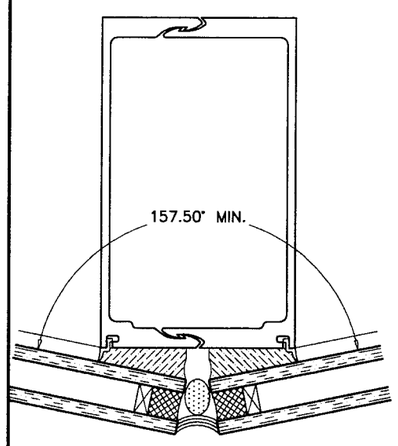

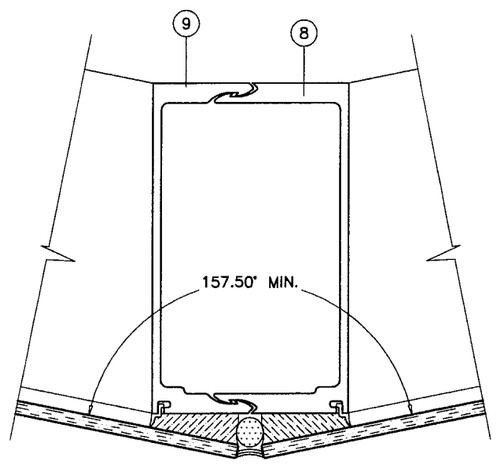

MULLION
UNREINFORCED
MAX. L = 120 IN.

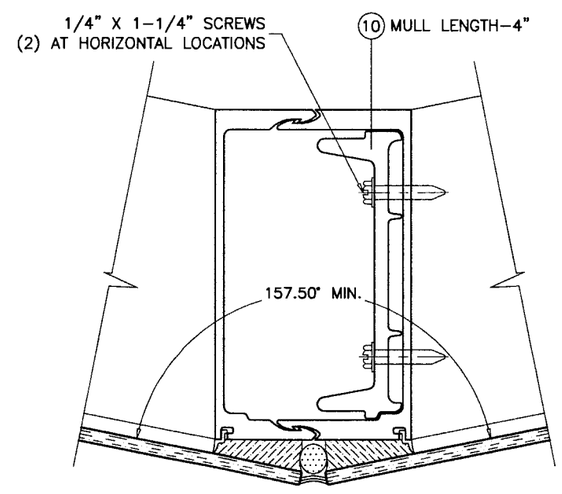

MULLION
ALUM REINFORCING

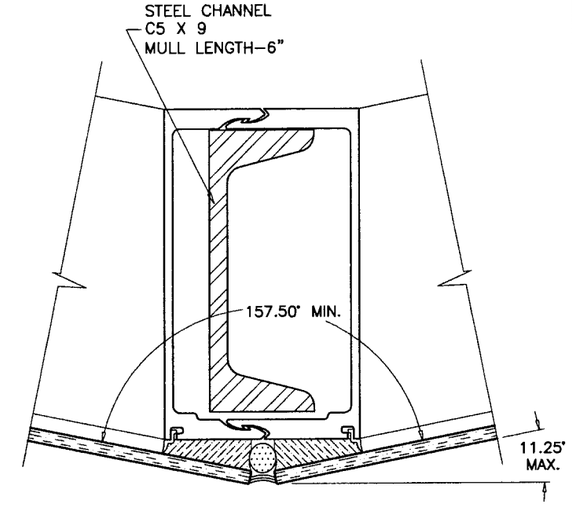

MULLION
STEEL REINFORCING

Engr: DR. HUMAYOUN FAROOQ
STRUCTURES
FLA. PE # 16557
C.A.N. 3538

SEP 10 2008

PRODUCT REVISED
as complying with the Florida Building Code
Acceptance No 08-0415.04
Expiration Date SEP 14, 2011
By Ishaq I. Chanda
Miami Dade Product Control Division

AL-FAROOQ CORPORATION
ENGINEERS & PRODUCT DEVELOPMENT
1235 S.W. 87 AVE
MIAMI, FLORIDA 33174
TEL. (305) 264-8100 FAX. (305) 262-6978

STORE\W04-105CTC

PRO-TECH 7SG ALUM CURTAIN WALL SYSTEM (N.I.)

CRAWFORD TRACEY CORPORATION
3301 SW 13TH DRIVE
DEERFIELD BEACH, FL. 33442-8101
TEL. (954) 698-6888 FAX. (954) 698-6889

revisions:

no	date	by	description
A	09.16.05		REV. PER BCCO COMMENTS
B	02.08.06		NO CHANGE THIS SHEET
C	02.28.08		NO CHANGE THIS SHEET
D	06.19.08		REV. PER BCCO COMMENTS
E	08.19.08		REV. PER BCCO COMMENTS

date: 12-30-04
scale: 3/8" = 1"
dr. by: HAMID
chk. by:

drawing no.
W04-105

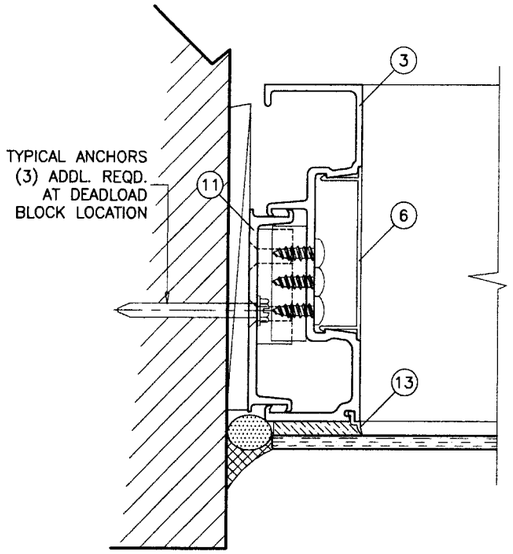

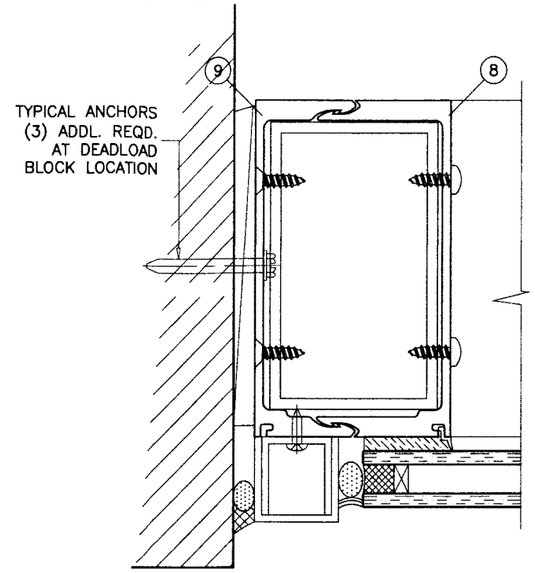

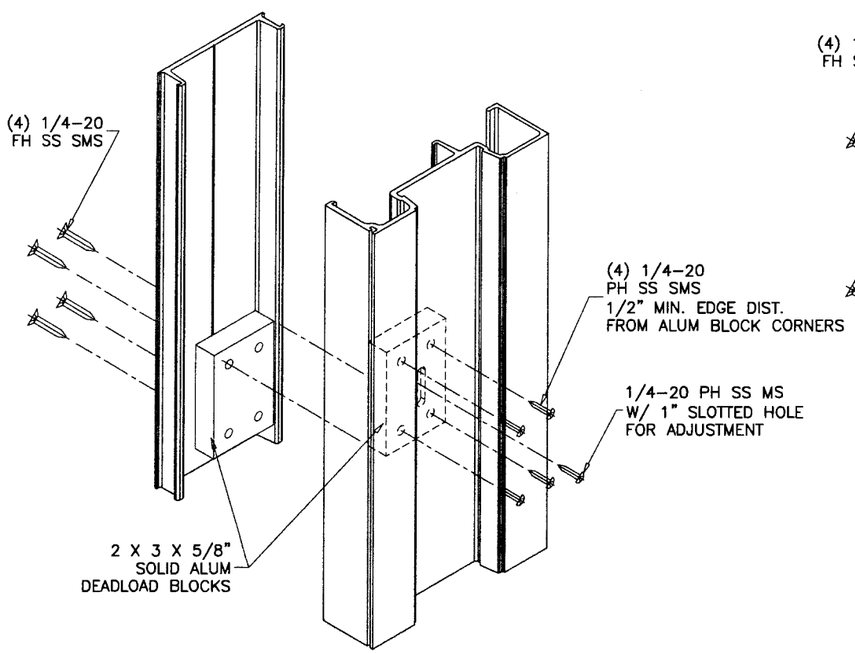

DEADLOAD BLOCKS DETAIL
TYPICAL JAMBS

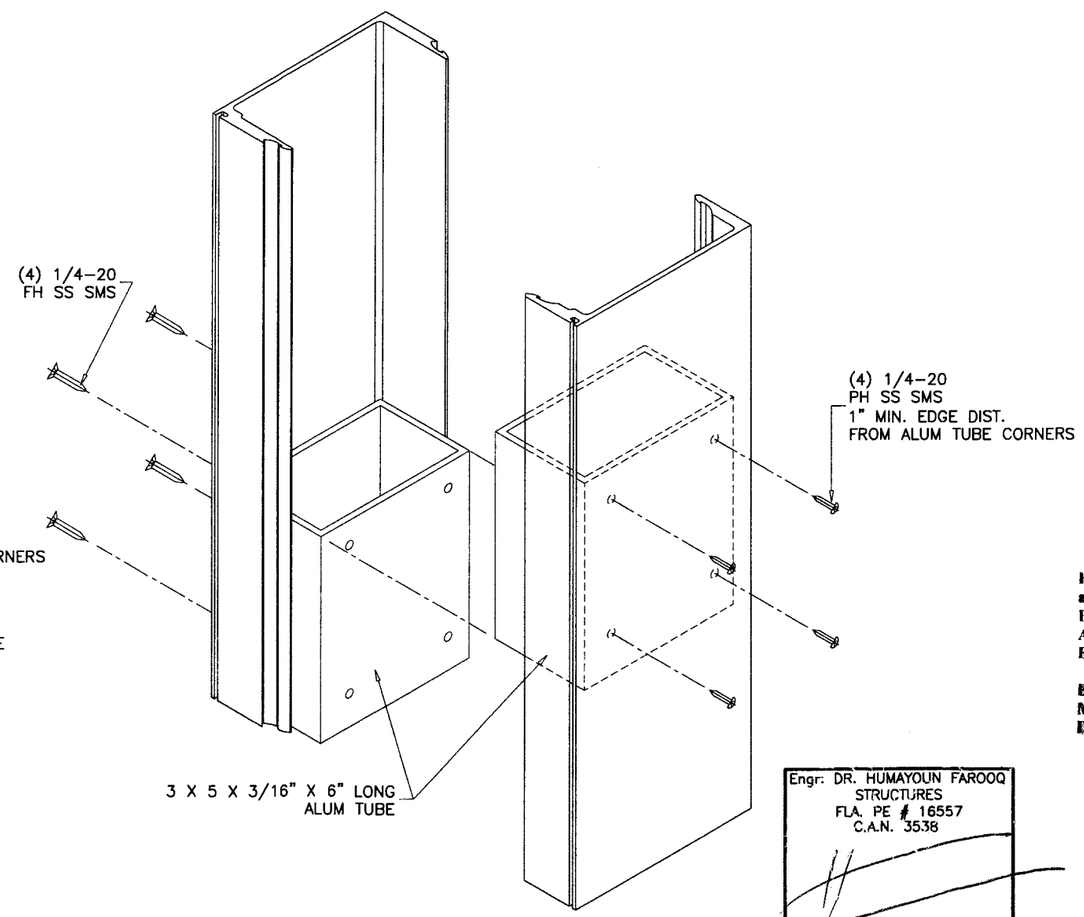

DEADLOAD BLOCKS DETAIL
ANCHORED MULLION AT JAMB

PRODUCT REVISED
as complying with the Florida Buiding Code
Acceptance No 08-0415.04
Expiration Date SEP 14, 2011
By Ishaq I. Chanda
Miami Dade Product Control Division

Engr: DR. HUMAYOUN FAROOQ
STRUCTURES
FLA. PE # 16557
C.A.N. 3538

SEP 10 2008

AL-FAROOQ CORPORATION
ENGINEERS & PRODUCT DEVELOPMENT
1235 S.W. 87 AVE
MIAMI, FLORIDA 33174
TEL. (305) 264-8100 FAX. (305) 262-6978
STORE\W04-105CTC

PRO-TECH 7SG ALUM CURTAIN WALL SYSTEM (N.I.)

CRAWFORD TRACEY CORPORATION
3301 SW 13TH DRIVE
DEERFIELD BEACH, FL. 33442-8101
TEL. (954) 698-6888 FAX. (954) 698-6889

revisions:

no	date	by	description
A	09.16.05		NO CHANGE THIS SHEET
B	02.08.06		NO CHANGE THIS SHEET
C	02.28.08		NO CHANGE THIS SHEET
D	06.19.08		REV. PER BCCO COMMENTS
E	08.19.08		REV. PER BCCO COMMENTS

date: 12-30-04
scale: 3/8" = 1"
dr. by: HAMID
chk. by:

drawing no.
W04-105

INTERMEDIATE ANCHOR TYPE ' I '

WIND LOAD ≤ 2250 LBS
DEAD LOAD ≤ 700 LBS

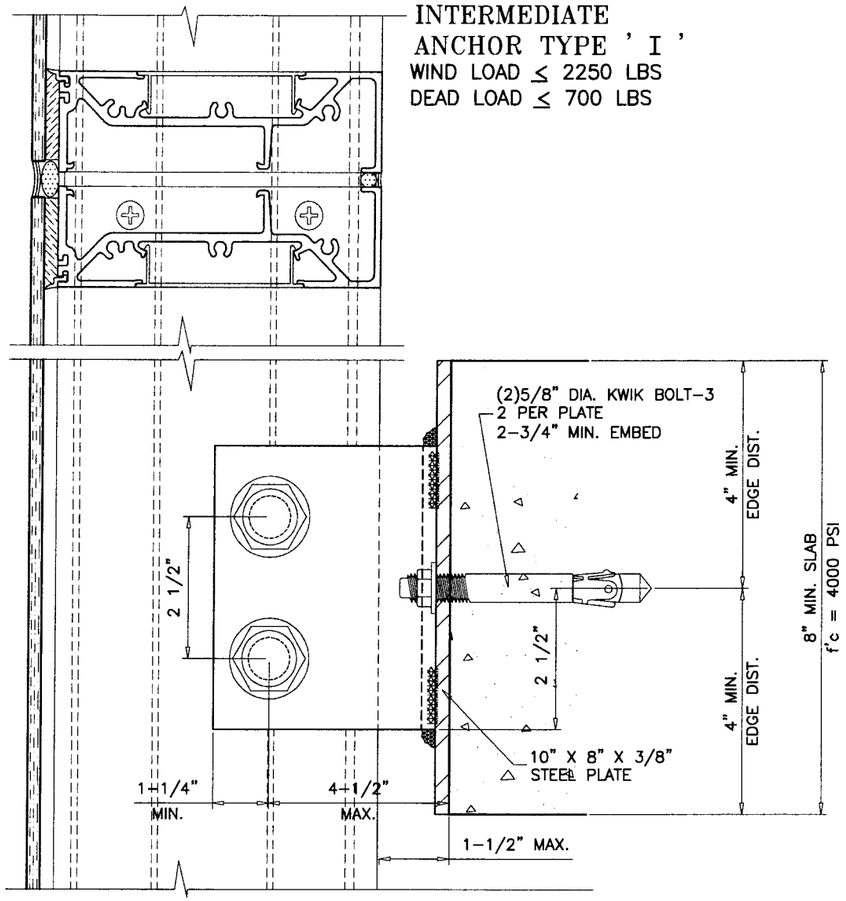

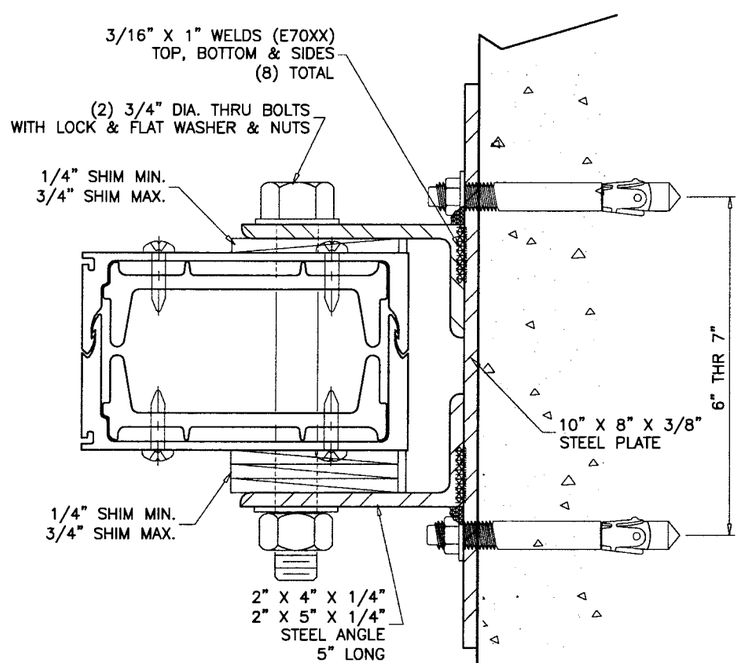

INTERMEDIATE ANCHOR TYPE ' II '

WIND LOAD ≤ 5500 LBS
DEAD LOAD ≤ 1050 LBS

INTERMEDIATE ANCHOR TYPE ' IIA '

WIND LOAD ≤ 7500 LBS
DEAD LOAD ≤ 1050 LBS

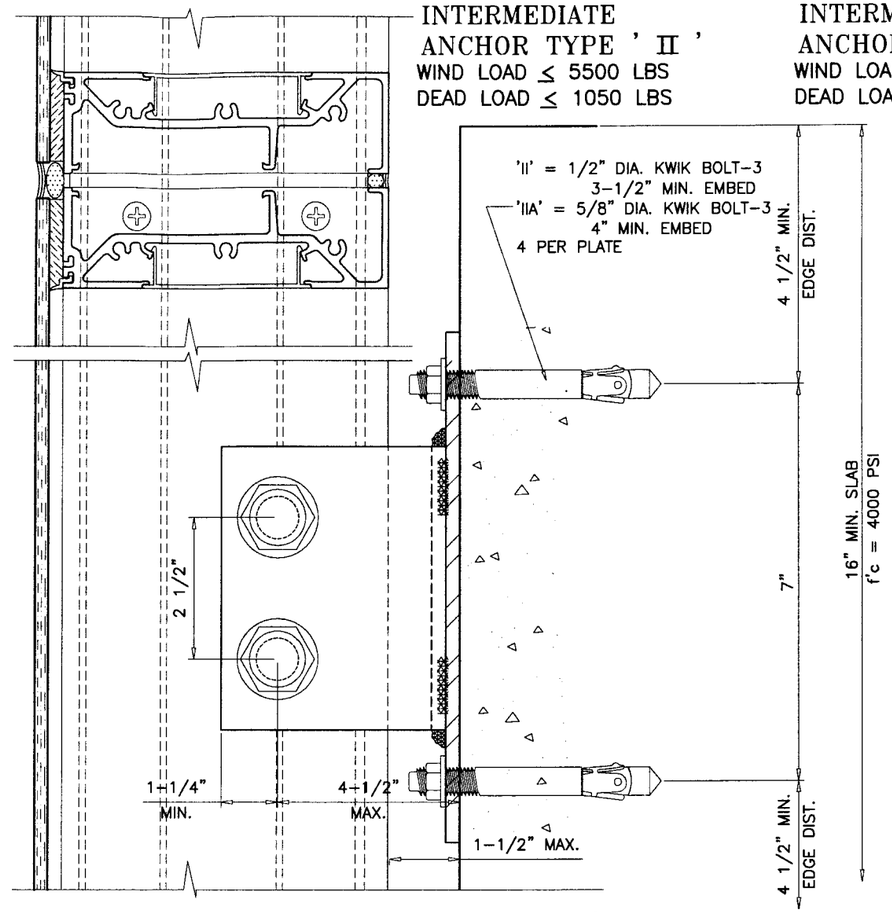

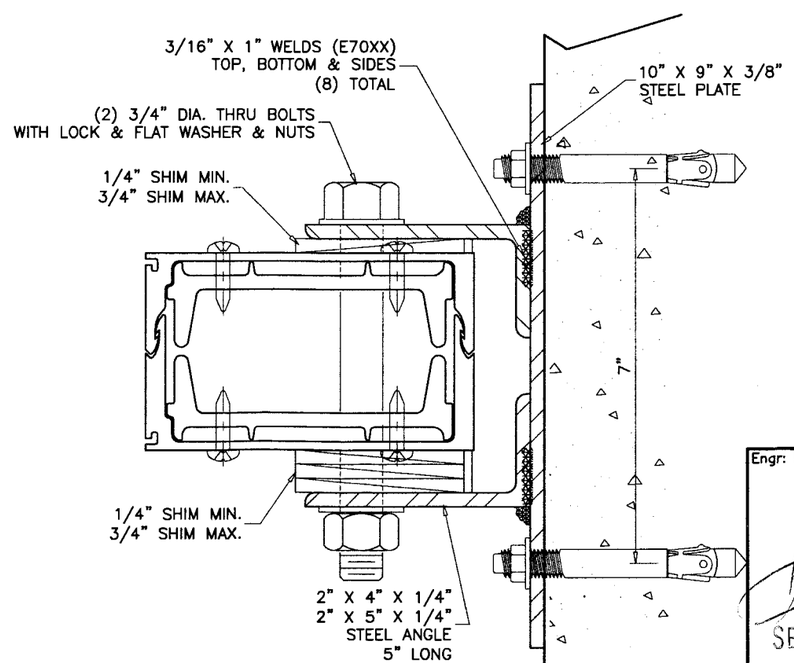

PRODUCT REVISED
as complying with the Florida Buiding Code
Acceptance No 08-0415.04
Expiration Date SEP 14, 2011
By Isaac L. Chaut
Miami Dade Product Control Division

Engr: DR. HUMAYOUN FAROOQ
STRUCTURES
FLA. PE # 16557
C.A.N. 3538

SEP 10 2008

AL-FAROOQ CORPORATION
ENGINEERS & PROJECT DEVELOPMENT
1235 S.W. 87 AVE
MIAMI, FLORIDA 33174
TEL. (305) 264-8100 FAX. (305) 262-6978

STORE\W04-105CTC

PRO-TECH 7SG ALUM CURTAIN WALL SYSTEM (N.I.)

CRAWFORD TRACEY CORPORATION
3301 SW 13TH DRIVE
DEERFIELD BEACH, FL. 33442-8101
TEL. (954) 698-6888 FAX. (954) 698-6889

revisions:

no	date	by	description
A	09.16.05		REV. PER BCCO COMMENTS
B	02.08.06		NO CHANGE THIS SHEET
C	02.28.08		HORIZONTALS REV.
D	06.19.08		REV. PER BCCO COMMENTS
E	08.19.08		NO CHANGE THIS SHEET

date: 12-30-04
scale: 3/8" = 1"
dr. by: HAMID
chk. by:

drawing no.
W04-105

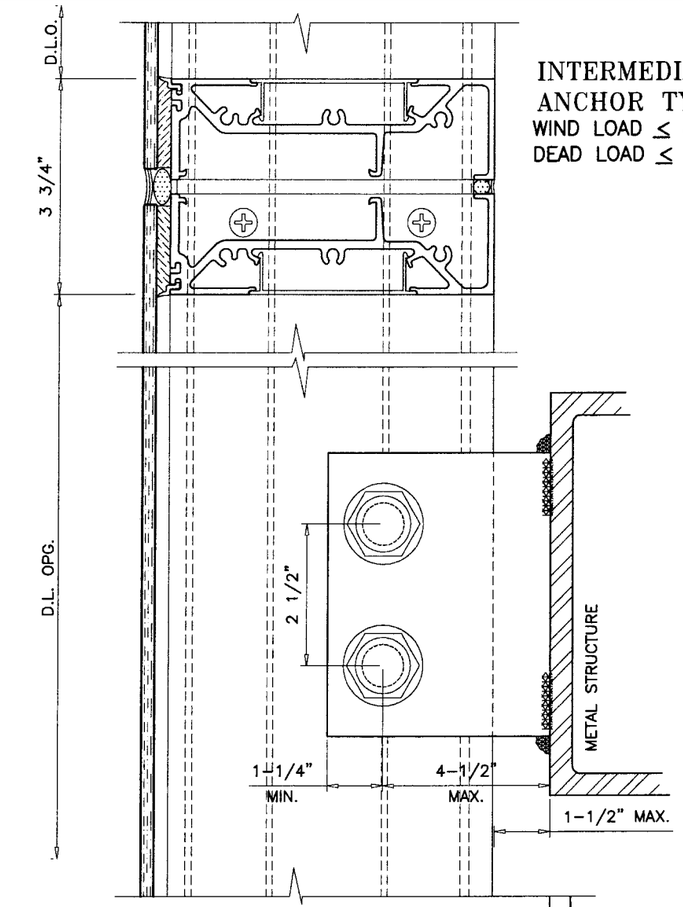

INTERMEDIATE
ANCHOR TYPE ' III '
WIND LOAD ≤ 8400 LBS
DEAD LOAD ≤ 1050 LBS

METAL STRUCTURES NOT BY CRAWFORD TRACEY, MUST SUPPORT LOADS IMPOSED BY GLAZING SYSTEM AND TRANSFER THEM TO THE BUILDING STRUCTURE.

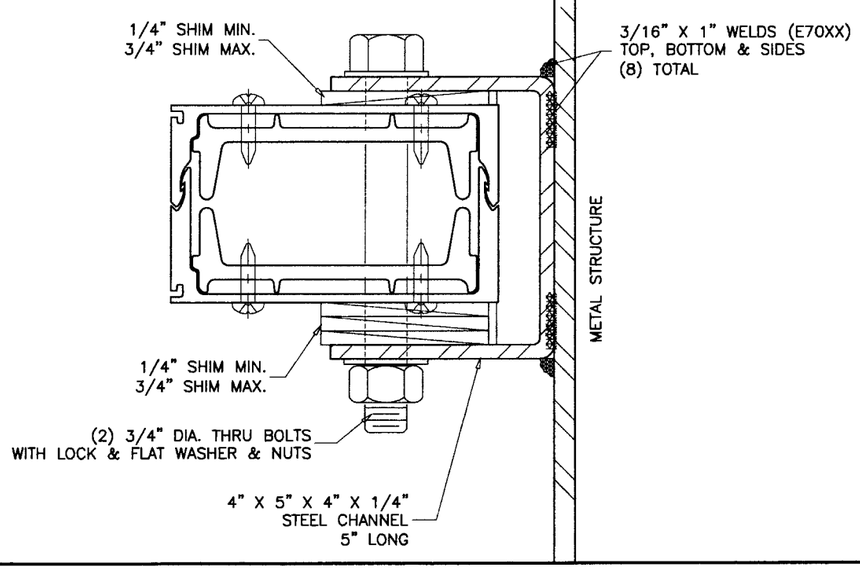

PRODUCT REVISED
as complying with the Florida
Buiding Code
Acceptance No 08-0415.04
Expiration Date SEP 14, 2011
By Ishwar I. Chande
Miami Dade Product Control
Division

Engr: DR. HUMAYOUN FAROOQ
STRUCTURES
FLA. PE # 16557
C.A.N. 3538

SEP 10 2008

AL-FAROOQ CORPORATION
ENGINEERS & PRODUCT DEVELOPMENT
1235 S.W. 87 AVE
MIAMI, FLORIDA 33174
TEL. (305) 264-8100 FAX. (305) 262-6978

STORE\W04-105CTC

PRO-TECH 7SG ALUM CURTAIN WALL SYSTEM (N.I.)

CRAWFORD TRACEY CORPORATION
3301 SW 13TH DRIVE
DEERFIELD BEACH, FL. 33442-8101
TEL. (954) 698-6888 FAX. (954) 698-6889

revisions:

no	date	by	description
A	09.16.05		REV. PER BCCO COMMENTS
B	02.08.06		REV. PER BCCO COMMENTS
C	02.28.08		HORIZONTALS REV.
D	06.19.08		REV. PER BCCO COMMENTS
E	08.19.08		REV. PER BCCO COMMENTS

date: 12-30-04
scale: 3/8" = 1"
dr. by: HAMID
chk. by:

drawing no.
W04-105

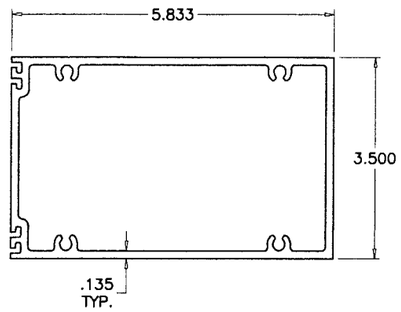

1 FRAME HEAD/HORIZONTAL

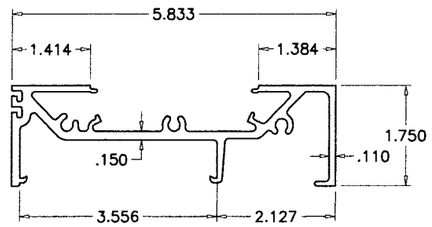

2 FRAME HEAD/SILL

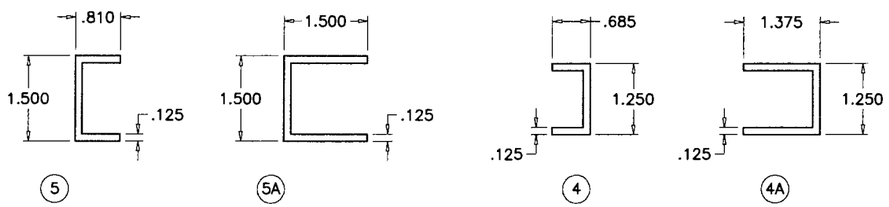

FILLER CHANNELS

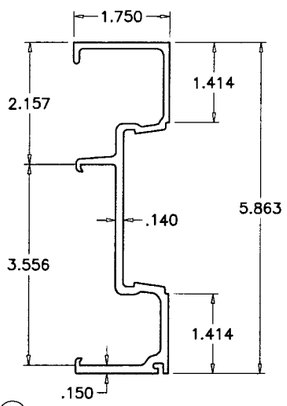

3 FRAME JAMB

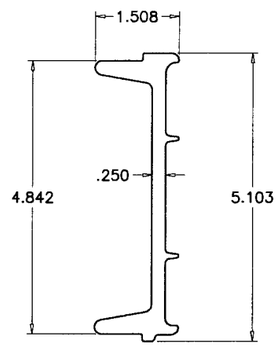

10 ALUM REINFORCING OR SPLICE

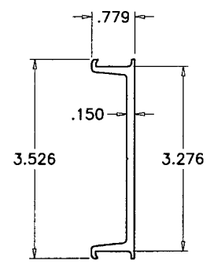

11 SUB BUCK

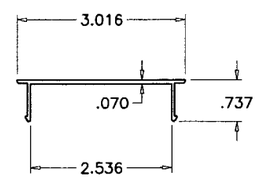

6 FRAME COVER

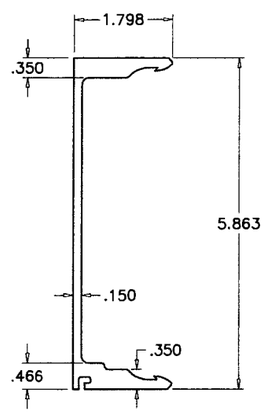

9 FEMALE JAMB/MULLION

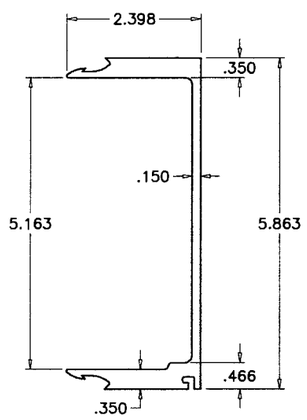

8 MALE JAMB/MULLION

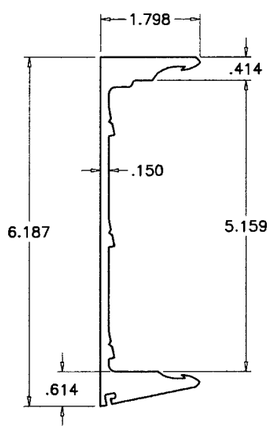

9A ALT. FEMALE MULLION

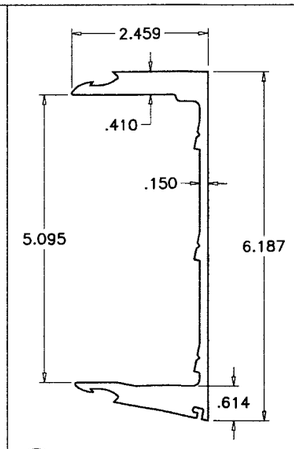

8A ALT. MALE MULLION

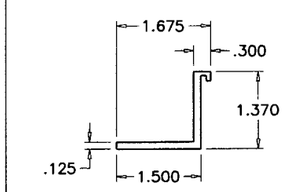

14 SETTING PIECE INSUL. GLASS

Engr: DR. HUMAYOUN FAROOQ
STRUCTURES
FLA. PE # 16557
C.A.N. 3538

SEP 10 2008

PRODUCT REVISED
as complying with the Florida Buiding Code
Acceptance No 06-0415-04
Expiration Date SEP 14, 2011
By Ishaq I. Chaudhry
Miami Dade Product Control Division

AL-FAROOQ CORPORATION
ENGINEERS & PRODUCT DEVELOPMENT
1235 S.W. 87 AVE
MIAMI, FLORIDA 33174
TEL. (305) 264-8100 FAX. (305) 262-6978

STORE\W04-105CTC

PRO-TECH 7SG ALUM CURTAIN WALL SYSTEM (N.I.)

CRAWFORD TRACEY CORPORATION
3301 SW 13TH DRIVE
DEERFIELD BEACH, FL. 33442-8101
TEL. (954) 698-6888 FAX. (954) 698-6889

revisions:

no	date	by	description
A	09.16.05		REV. PER BCCO COMMENTS
B	02.08.06		NO CHANGE THIS SHEET
C	02.28.08		HORIZONTALS REV.
D	06.19.08		REV. PER BCCO COMMENTS
E	08.19.08		NO CHANGE THIS SHEET

date: 12-30-04
scale: 3/8" = 1"
dr. by: HAMID
chk. by:

drawing no.
W04-105

ITEM NO.	PART NO.	QUANTITY	DESCRIPTION	MATERIAL	MANF./SUPPLIER/REMARKS
1	170H342	AS REQD.	FRAME HEAD/HORIZONTAL	6105-T5	–
2	170P176	AS REQD.	FRAME HEAD/SILL	6105-T5	–
3	170J176	AS REQD.	FRAME JAMB	6105-T5	–
4	–	AS REQD.	INT. FILLER CHANNEL (MONOLITHIC GLASS)	ALUMINUM	–
4A	–	AS REQD.	INT. FILLER CHANNEL (MONOLITHIC INSUL. GLASS)	ALUMINUM	–
5	–	AS REQD.	EXT. FILLER CHANNEL (MONOLITHIC GLASS)	ALUMINUM	–
5A	–	AS REQD.	EXT. FILLER CHANNEL (MONOLITHIC INSUL. GLASS)	ALUMINUM	–
6	T30U119	AS REQD.	SNAP IN COVER	6063-T6	–
8	170M113	AS REQD.	MALE JAMB/MULLION	6105-T5	–
8A	170M115	AS REQD.	ALT. MALE MULLION	6105-T5	–
9	170M114	AS REQD.	FEMALE JAMB/MULLION	6105-T5	–
9A	170M116	AS REQD.	ALT. FEMALE MULLION	6105-T5	–
10	170R140	AS REQD.	SPLICE	6063-T6	45" LONG
11	B32B070	AS REQD.	SUB-BUCK	6105-T5	–
13	#2	AS REQD.	GLAZING SPACER	POLYPROPYLENE	–
14	170-116	AS REQD.	4" LONG SETTING PIECE (INSUL. GLASS)	6105-T5	AT 1/4 POINTS
15	1/4"X1-1/4"	AS REQD.	FRAME ASSEMBLY SCREWS	ST. STEEL	PAN HEAD PHILLIPS
16	C5 X 9	AS REQD.	STEEL CHANNEL	–	–
17	–	AS REQD.	SETTING BLOCK (1/16" X 1")	NEOPRENE	AT QUARTER POINTS

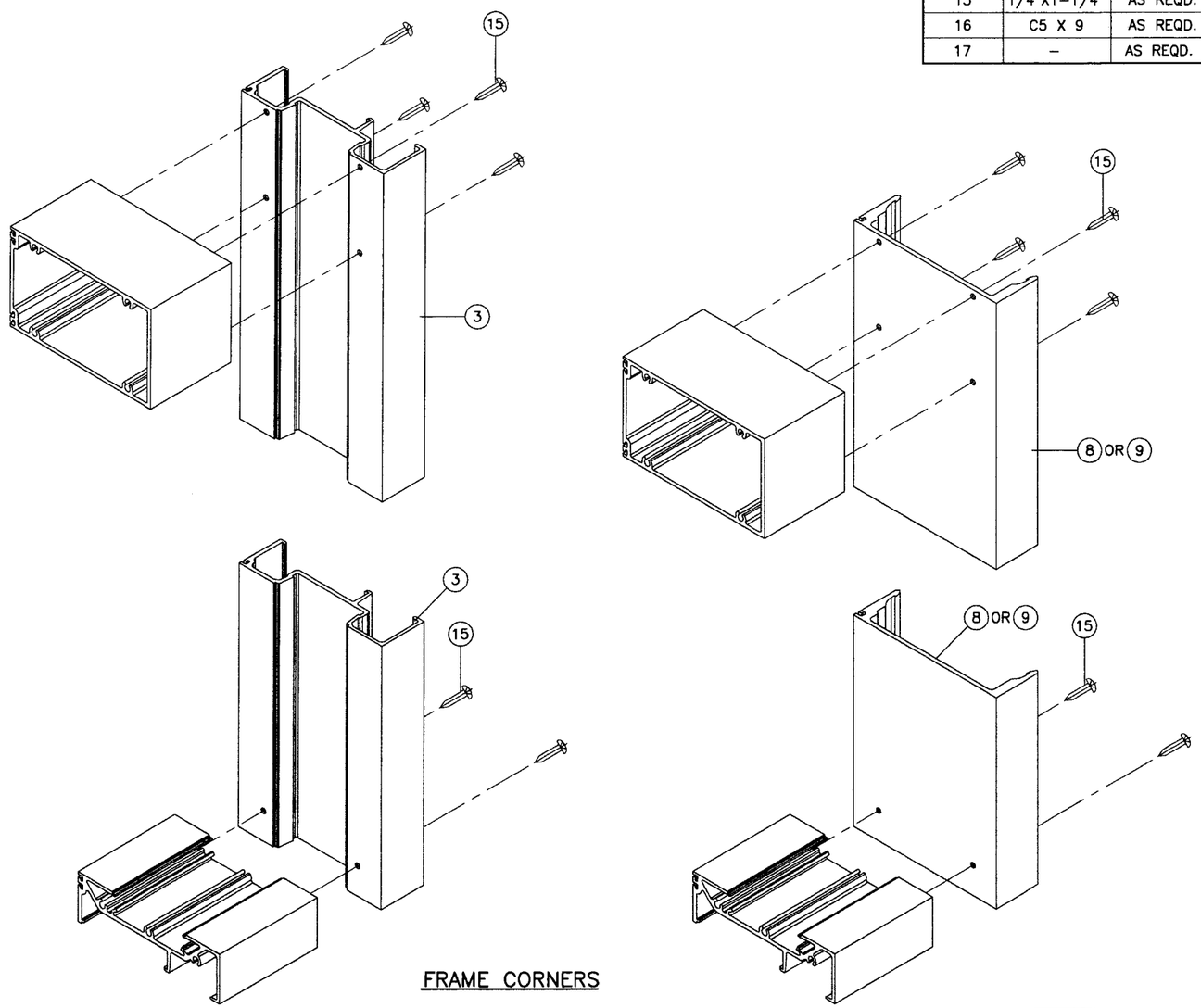

FRAME CORNERS

PRODUCT REVISED
as complying with the Florida
Buiding Code
Acceptance No 08-0415.04
Expiration Date SEP 14, 2011
By Ishwar L. Chawla
Miami Dade Product Control
Division

Engr: DR. HUMAYOUN FAROOQ
STRUCTURES
FLA. PE # 16557
C.A.N. 3538

SEP 10 2008

AL-FAROOQ CORPORATION
ENGINEERS & PRODUCT DEVELOPMENT
1235 S.W. 87 AVE
MIAMI, FLORIDA 33174
TEL. (305) 264-8100 FAX. (305) 262-6978

STORE\W04-105CTC

PRO-TECH 7SG ALUM CURTAIN WALL SYSTEM (N.I.)

CRAWFORD TRACEY CORPORATION
3301 SW 13TH DRIVE
DEERFIELD BEACH, FL. 33442-8101
TEL. (954) 698-6888 FAX. (954) 698-6889

revisions:

no	date	by	description
A	09.16.05		REV. PER BCCO COMMENTS
B	02.08.06		NO CHANGE THIS SHEET
C	02.28.08		HORIZONTALS REV.
D	06.19.08		REV. PER BCCO COMMENTS
E	08.19.08		NO CHANGE THIS SHEET

date: 12-30-04
scale: 3/8" = 1"
dr. by: HAMID
chk. by:

drawing no.
W04-105