MIAMI-DADE COUNTY
BUILDING CODE COMPLIANCE OFFICE (BCCO)
PRODUCT CONTROL DIVISION

MIAMI-DADE COUNTY, FLORIDA
METRO-DADE FLAGLER BUILDING
140 WEST FLAGLER STREET, SUITE 1603
MIAMI, FLORIDA 33130-1563
(305) 375-2901 FAX (305) 372-6339
www.maimidade.gov/buildingcode

# NOTICE OF ACCEPTANCE (NOA)

**Crawford Tracey Corporation**
**3301 SW 13th Drive**
**Deerfield Beach, FL 33442**

**SCOPE:**

This NOA is being issued under the applicable rules and regulations governing the use of construction materials. The documentation submitted has been reviewed by Miami-Dade County Product Control Division and accepted by the Board of Rules and Appeals (BORA) to be used in Miami Dade County and other areas where allowed by the Authority Having Jurisdiction (AHJ).

This NOA shall not be valid after the expiration date stated below. The Miami-Dade County Product Control Division (In Miami Dade County) and/or the AHJ (in areas other than Miami Dade County) reserve the right to have this product or material tested for quality assurance purposes. If this product or material fails to perform in the accepted manner, the manufacturer will incur the expense of such testing and the AHJ may immediately revoke, modify, or suspend the use of such product or material within their jurisdiction. BORA reserves the right to revoke this acceptance, if it is determined by Miami-Dade County Product Control Division that this product or material fails to meet the requirements of the applicable building code.

This product is approved as described herein, and has been designed to comply with the Florida Building Code, including the High Velocity Hurricane Zone.

**DESCRIPTION: Series "Pro-Tech 45SG" Aluminum Window Wall System – L.M.I.**

**APPROVAL DOCUMENT:** Drawing No. **W05-31,** titled "Pro-Tech 45SG Alum. Window Wall System (L.M.I.)", sheets 1 through 8 of 8, dated 06/24/05 with revision A dated 02/27/08, prepared by Al-Farooq Corporation, signed and sealed by Humayoun Farooq, P.E., bearing the Miami-Dade County Product Control Revision stamp with the Notice of Acceptance number and expiration date by the Miami-Dade County Product Control Division.

**MISSILE IMPACT RATING: Large and Small Missile Impact Resistant**

**LABELING:** Each unit shall bear a permanent label with the manufacturer's name or logo, city, state and following statement: "Miami-Dade County Product Control Approved", unless otherwise noted herein.

**RENEWAL** of this NOA shall be considered after a renewal application has been filed and there has been no change in the applicable building code negatively affecting the performance of this product.

**TERMINATION** of this NOA will occur after the expiration date or if there has been a revision or change in the materials, use, and/or manufacture of the product or process. Misuse of this NOA as an endorsement of any product, for sales, advertising or any other purposes shall automatically terminate this NOA. Failure to comply with any section of this NOA shall be cause for termination and removal of NOA.

**ADVERTISEMENT:** The NOA number preceded by the words Miami-Dade County, Florida, and followed by the expiration date may be displayed in advertising literature. If any portion of the NOA is displayed, then it shall be done in its entirety.

**INSPECTION:** A copy of this entire NOA shall be provided to the user by the manufacturer or its distributors and shall be available for inspection at the job site at the request of the Building Official.

This NOA **revises NOA # 06-0119.10** and consists of this page 1 and evidence pages E-1 and E-2, as well as approval document mentioned above.

The submitted documentation was reviewed by **Manuel Perez, P.E.**

MIAMI-DADE COUNTY APPROVED

**NOA No. 08-0415.08**
**Expiration Date: June 22, 2011**
**Approval Date: May 22, 2008**

**Crawford Tracey Corporation**

## NOTICE OF ACCEPTANCE: EVIDENCE SUBMITTED

**A. DRAWINGS**

1. Manufacturer's die drawings and sections.
2. Drawing No. **W05-31,** titled "Pro-Tech 45SG Alum Window Wall System (L.M.I)", sheets 1 through 8 of 8, dated 06/24/05, with revision A dated 02/27/08, prepared by Al-Farooq, signed and sealed by Humayoun Farooq, P.E.

**B. TESTS**

1. Test reports on 1) Air Infiltration Test, per FBC, TAS 202-94
   2) Uniform Static Air Pressure Test, Loading per FBC TAS 202-94
   3) Water Resistance Test, per FBC, TAS 202-94
   4) Large Missile Impact Test per FBC, TAS 201-94
   5) Small Missile Impact Test per FBC, TAS 201-94
   6) Cyclic Wind Pressure Loading per FBC, TAS 203-94

   along with marked-up drawings and installation diagram of a series 45SG aluminum window wall system, prepared by American Test Lab of South Florida, Test Report No. **ATL-1129.01-07**, dated 01/29/08, signed and sealed by Henry Hattem, P.E.
2. Test reports on 1) Air Infiltration Test, per FBC, TAS 202-94
   2) Uniform Static Air Pressure Test, Loading per FBC, TAS 202-94
   3) Water Resistance Test, per FBC, TAS 202-94
   4) Large Missile Impact Test per FBC, TAS 201-94
   5) Cyclic Wind Pressure Loading per FBC, TAS 203-94

   along with marked-up drawings and installation diagram of a Pro –Tech 45SG -LMI, aluminum window wall system, prepared by American Test Lab of South Florida, Test Report No. **ATL-0310.01-05** dates 06/01/05, signed and sealed by Henry Hattem, P.E. ***(Submitted under NOA# 06-0119.10)***

**C. CALCULATIONS**

1. Anchor verification calculations and structural analysis, complying with FBC-2004, prepared by Al-Farooq Corporation, dated 03/05/08, signed and sealed by Humayoun Farooq, P.E.
   **Complies with ASTM E1300-02**

**D. QUALITY ASSURANCE**

1. Miami Dade Building Code Compliance Office (BCCO).

**Manuel Perez, P.E.**
**Product Control Examiner**
**NOA No. 08-0415.08**
**Expiration Date: June 22, 2011**
**Approval Date: May 22, 2008**

## NOTICE OF ACCEPTANCE: EVIDENCE SUBMITTED

### E. MATERIAL CERTIFICATIONS

1. Notice of Acceptance No. **06-0216.06** issued to Solutia Inc. for their "**Saflex IIIG Clear or colored Interlayer**" dated 05/04/06, expiring on 05/21/11.
2. Notice of Acceptance No. **03-0415.13** issued to Solutia Inc. for their "**Vanceva Composites used for lamination of glass**" dated 12/11/03, expiring on 12/11/08.
3. Notice of Acceptance No. **07-1116.04** issued to E.I. DuPont DeNemours & Co., Inc. for their "**DuPont SentryGlas ® Plus**" dated 01/03/08, expiring on 01/14/12.

### F. STATEMENTS

1. Statement letter of conformance, dated March 5, 2008, signed and sealed by Humayoun Farooq, P.E.
2. Statement letter of no financial interest, dated March 5, 2008, signed and sealed by Humayoun Farooq, P.E.
3. Laboratory compliance letter for Test Report No. **ATL-1129.01-07**, issued by American Test Lab of South Florida, dated 01/29/08, signed and sealed by Henry Hattem, P.E.

### G. OTHER

1. Notice of Acceptance **No. 06-0119.10**, issued to Crawford Tracey Corporation for "Series "Pro-Tech 45SG" Aluminum Window Wall System - L.M.I.", dated 06/22/06 and expiring on 06/22/11.

**Manuel Perez, P.E.**
**Product Control Examiner**
**NOA No. 08-0415.08**
**Expiration Date: June 22, 2011**
**Approval Date: May 22, 2008**

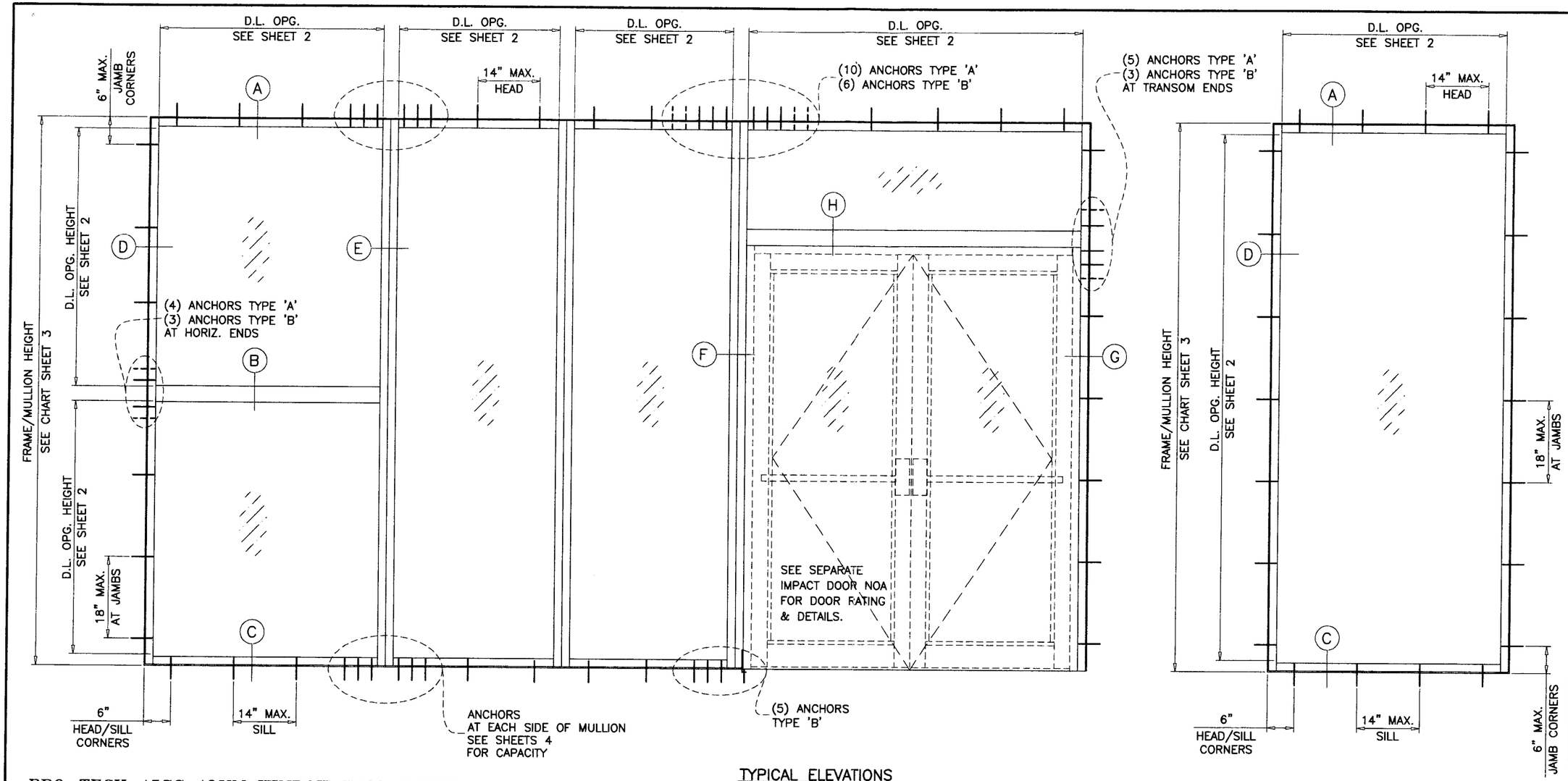


## TYPICAL ELEVATIONS

THIS SYSTEM IS RATED FOR LARGE MISSILE IMPACT.
SHUTTERS ARE NOT REQUIRED.

## PRO-TECH 45SG ALUM WINDOW WALL SYSTEM

THIS SYSTEM MAY BE USED IN CONJUNCTION WITH MIAMI-DADE COUNTY APPR'D LARGE MISSILE IMPACT RESISTANT DOORS. LOWER DESIGN PRESSURE FROM WINDOW WALL SYSTEM OR DOOR APPROVAL WILL APPLY TO ENTIRE SYSTEM.

CODE REQUIREMENTS FOR SAFEGUARDS MUST BE OBSERVED.

THIS PRODUCT HAS BEEN DESIGNED AND TESTED TO COMPLY WITH THE REQUIREMENTS OF THE FLORIDA BUILDING CODE 2004 EDITION INCLUDING HIGH VELOCITY HURRICANE ZONE (HVHZ).

WOOD BUCKS BY OTHERS, MUST BE ANCHORED PROPERLY TO TRANSFER LOADS TO THE STRUCTURE.

ANCHORS SHALL BE AS LISTED, SPACED AS SHOWN ON DETAILS, ANCHORS EMBEDMENT TO BASE MATERIAL SHALL BE BEYOND WALL DRESSING OR STUCCO.

ANCHORING OR LOADING CONDITIONS NOT SHOWN IN THESE DETAILS ARE NOT PART OF THIS APPROVAL.

A LOAD DURATION INCREASE IN ALLOWABLE STRESS IS USED IN DESIGN OF ANCHORS INTO WOOD ONLY.

MATERIALS INCLUDING BUT NOT LIMITED TO STEEL/METAL SCREWS, THAT COME INTO CONTACT WITH OTHER DISSIMILAR MATERIALS SHALL MEET THE REQUIREMENTS OF 2004 FLORIDA BLDG. CODE SECTION 2003.8.4.

## INSTRUCTIONS:

USE CHARTS AS FOLLOWS.

**STEP 1** DETERMINE DESIGN WIND LOAD REQUIREMENTS BASED ON WIND VELOCITY, BLDG. HEIGHT, WIND ZONE USING APPLICABLE ASCE 7 STANDARD.

**STEP 2** SEE CHARTS ON SHEETS 2 FOR DESIGN LOAD CAPACITY OF DESIRED GLASS SIZE.

**STEP 3** CHECK MULLION CAPACITY FOR A GIVEN SPACING AND HEIGHT USING CHARTS ON SHEET 3
THE CAPACITY SHOULD EXCEED THE DESIGN LOAD.

**STEP 4** USING CHART ON SHEETS 4 SELECT ANCHOR OPTION WITH DESIGN RATING MORE THAN DESIGN LOAD SPECIFIED IN STEP 1 ABOVE.

**STEP 5** THE LOWEST VALUE RESULTING FROM STEPS 2, 3 AND 4 SHALL APPLY TO ENTIRE SYSTEM.

LAMINATED GLASS
LARGE MISSILE IMPACT

Engr: DR. HUMAYOUN FAROOQ
STRUCTURES
FLA. PE # 16557
C.A.N. 3538

MAR 17 2008

PRODUCT REVISED
as complying with the Florida
Building Code
Acceptance No. 08-0415.08
Expiration Date 06/22/2011
By Manuel Perez
Miami-Dade Product Control
Division


AL-FAROOQ CORPORATION
ENGINEERS & PRODUCT DEVELOPMENT
1235 S.W. 87 AVE
MIAMI, FLORIDA 33174
TEL. (305) 264-8100 FAX. (305) 262-6978


STORE\W05-31CTC

PRO-TECH 45SG ALUM WINDOW WALL SYSTEM (L.M.I.)

CRAWFORD TRACEY CORPORATION
3301 SW 13TH DRIVE
DEERFIELD BEACH, FL. 33442-8101
TEL. (954) 698-6888 FAX. (954) 698-6889

revisions:

| no | date | by | description |
|---|---|---|---|
| A | 02.27.08 | | NOTES REV. |

date: 06-24-05
scale: 1/2"=1'-0"
dr. by: HAMID
chk. by:

drawing no.
W05-31

sheet 1 of 8

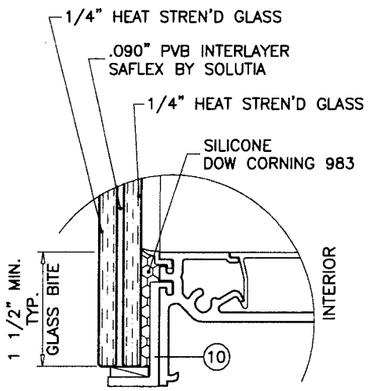


GLASS TYPE 'A'
9/16" OVERALL LAM. GLASS

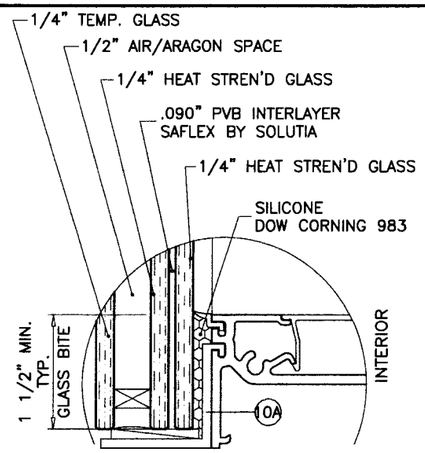


GLASS TYPE 'A1'
1-5/16" OVERALL INSUL. LAM. GLASS

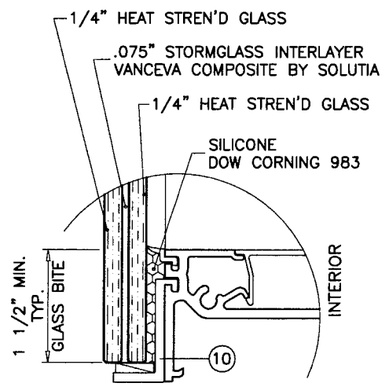


GLASS TYPE 'B'
9/16" OVERALL LAM. GLASS

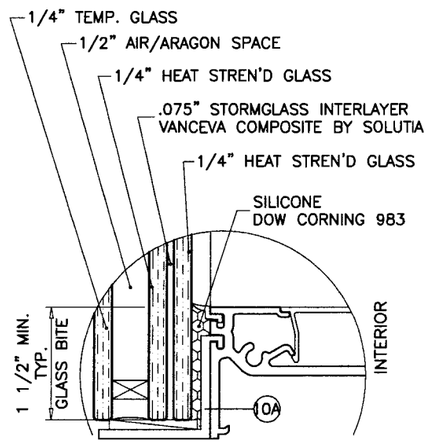


GLASS TYPE 'B1'
1-5/16" OVERALL INSUL. LAM. GLASS

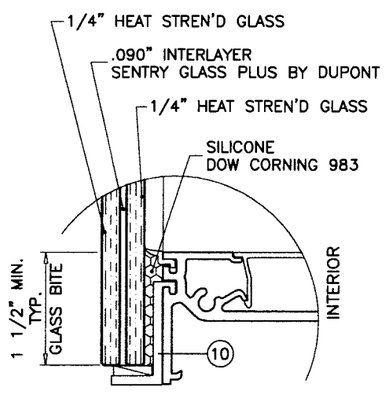


GLASS TYPE 'C'
9/16" OVERALL LAM. GLASS

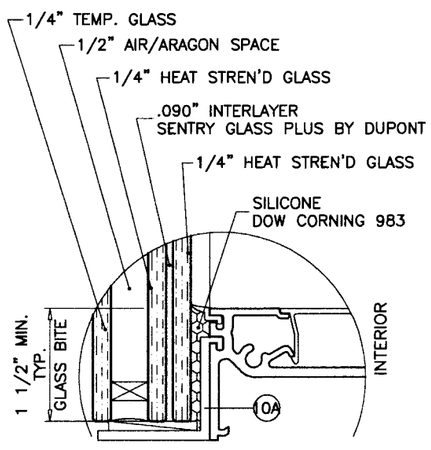


GLASS TYPE 'C1'
1-5/16" OVERALL INSUL. LAM. GLASS

GLAZING OPTIONS

| GLASS LOAD CAPACITY – PSF | | | | |
|---|---|---|---|---|
| NOMINAL DIMS. | | GLASS TYPE 'A' & 'A1' | GLASS TYPE 'B' & 'C' | GLASS TYPE 'B1' & 'C1' |
| D.L.O. WIDTH | D.L.O. HEIGHT | EXT. (+) INT. (–) | EXT. (+) INT. (–) | EXT. (+) INT. (–) |
| 24" | 54" | 80.0 | 100.0 | 100.0 |
| 30" | | 80.0 | 100.0 | 100.0 |
| 36" | | 80.0 | 100.0 | 100.0 |
| 42" | | 80.0 | 100.0 | 100.0 |
| 48" | | 80.0 | 100.0 | 100.0 |
| 54" | | 80.0 | 100.0 | 100.0 |
| 60" | | 80.0 | 100.0 | 100.0 |
| 66" | | 80.0 | 100.0 | 100.0 |
| 72" | | 80.0 | 100.0 | 100.0 |
| 24" | 60" | 80.0 | 100.0 | 100.0 |
| 30" | | 80.0 | 100.0 | 100.0 |
| 36" | | 80.0 | 100.0 | 100.0 |
| 42" | | 80.0 | 100.0 | 100.0 |
| 48" | | 80.0 | 100.0 | 100.0 |
| 54" | | 80.0 | 100.0 | 100.0 |
| 60" | | 80.0 | 100.0 | 100.0 |
| 66" | | – | 100.0 | 100.0 |
| 72" | | – | 100.0 | 100.0 |
| 24" | 66" | 80.0 | 100.0 | 100.0 |
| 30" | | 80.0 | 100.0 | 100.0 |
| 36" | | 80.0 | 100.0 | 100.0 |
| 42" | | 80.0 | 100.0 | 100.0 |
| 48" | | 80.0 | 100.0 | 100.0 |
| 54" | | 80.0 | 100.0 | 100.0 |
| 60" | | – | 100.0 | 100.0 |
| 66" | | – | 100.0 | 100.0 |
| 72" | | – | 100.0 | 100.0 |
| 24" | 72" | 80.0 | 100.0 | 100.0 |
| 30" | | 80.0 | 100.0 | 100.0 |
| 36" | | 80.0 | 100.0 | 100.0 |
| 42" | | 80.0 | 100.0 | 100.0 |
| 48" | | 80.0 | 100.0 | 100.0 |
| 54" | | 80.0 | 100.0 | 100.0 |
| 60" | | – | 100.0 | 100.0 |
| 66" | | – | 100.0 | 100.0 |
| 72" | | – | 100.0 | 100.0 |
| 24" | 78" | 80.0 | 100.0 | 100.0 |
| 30" | | 80.0 | 100.0 | 100.0 |
| 36" | | 80.0 | 100.0 | 100.0 |
| 42" | | 80.0 | 100.0 | 100.0 |
| 48" | | 80.0 | 100.0 | 100.0 |
| 54" | | – | 100.0 | 100.0 |
| 60" | | – | 100.0 | 100.0 |
| 66" | | – | 100.0 | 100.0 |
| 24" | 84" | 80.0 | 100.0 | 100.0 |
| 30" | | 80.0 | 100.0 | 100.0 |
| 36" | | 80.0 | 100.0 | 100.0 |
| 42" | | 80.0 | 100.0 | 100.0 |
| 48" | | – | 100.0 | 100.0 |
| 54" | | – | 100.0 | 100.0 |
| 60" | | – | 100.0 | 100.0 |

| GLASS LOAD CAPACITY – PSF | | | | |
|---|---|---|---|---|
| NOMINAL DIMS. | | GLASS TYPE 'A' & 'A1' | GLASS TYPE 'B' & 'C' | GLASS TYPE 'B1' & 'C1' |
| D.L.O. WIDTH | D.L.O. HEIGHT | EXT. (+) INT. (–) | EXT. (+) INT. (–) | EXT. (+) INT. (–) |
| 24" | 90" | 80.0 | 100.0 | 100.0 |
| 30" | | 80.0 | 100.0 | 100.0 |
| 36" | | 80.0 | 100.0 | 100.0 |
| 42" | | 80.0 | 100.0 | 100.0 |
| 48" | | – | 100.0 | 100.0 |
| 54" | | – | 100.0 | 100.0 |
| 24" | 96" | 80.0 | 100.0 | 100.0 |
| 30" | | 80.0 | 100.0 | 100.0 |
| 36" | | 80.0 | 100.0 | 100.0 |
| 42" | | – | 100.0 | 100.0 |
| 48" | | – | 100.0 | 100.0 |
| 54" | | – | 100.0 | 100.0 |
| 24" | 102" | 80.0 | 100.0 | 100.0 |
| 30" | | 80.0 | 100.0 | 100.0 |
| 36" | | 80.0 | 100.0 | 100.0 |
| 42" | | – | 100.0 | 100.0 |
| 48" | | – | 100.0 | 100.0 |
| 24" | 108" | 80.0 | 100.0 | 100.0 |
| 30" | | 80.0 | 100.0 | 100.0 |
| 36" | | 80.0 | 100.0 | 100.0 |
| 42" | | – | 100.0 | 100.0 |
| 48" | | – | 100.0 | 100.0 |
| 24" | 114" | 80.0 | 100.0 | 100.0 |
| 30" | | 80.0 | 100.0 | 100.0 |
| 36" | | – | 100.0 | 100.0 |
| 42" | | – | 100.0 | 100.0 |
| 24" | 120" | 80.0 | 100.0 | 100.0 |
| 30" | | 80.0 | 100.0 | 100.0 |
| 36" | | – | 100.0 | 100.0 |
| 42" | | – | 100.0 | 100.0 |
| 44-1/2" | 116-1/2" | – | 100.0 | 100.0 |
| 56-1/2" | 68-1/2" | 80.0 | 100.0 | 100.0 |
| 56-1/2" | 92-1/2" | – | 94.9 | 100.0 |

NOTE:
GLASS CAPACITIES ON THIS SHEET ARE BASED ON ASTM E1300-02 (3 SEC. GUSTS).

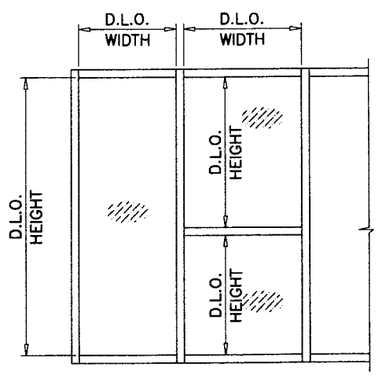


PRODUCT REVISED
as complying with the Florida Building Code
Acceptance No. 08-0415.08
Expiration Date 06/22/2011
By Miami-Dade Product Control Division

Engr: DR. HUMAYGUN FAROOQ
STRUCTURES
FLA. PE # 16557
C.A.N. 3538

MAR 17 2008


AL-FAROOQ CORPORATION
ENGINEERS & PRODUCT DEVELOPMENT
1235 S.W. 87 AVE
MIAMI, FLORIDA 33174
TEL. (305) 264-8100 FAX. (305) 262-6978


STORE\W05-31CTC

PRO-TECH 45SG ALUM WINDOW WALL SYSTEM (L.M.I.)

CRAWFORD TRACEY CORPORATION
3301 SW 13TH DRIVE
DEERFIELD BEACH, FL. 33442-8101
TEL. (954) 698-6888 FAX. (954) 698-6889

| revisions: | | | |
|---|---|---|---|
| no | date | by | description |
| A | 02.27.08 | | INSUL. GLASS ADDED |

date: 06-24-05
scale: 1/2" = 1"
dr. by: HAMID
chk. by:

drawing no.
W05-31

## MULLION LOAD CAPACITY – PSF
WITHOUT INTERMEDIATE HORIZONTALS

| NOMINAL DIMS. | | WITHOUT REINF. | LIGHT REINF. | HEAVY REINF. |
|---|---|---|---|---|
| WIDTH (W) | FRAME HEIGHT | EXT. (+) INT. (–) | EXT. (+) INT. (–) | EXT. (+) INT. (–) |
| 24" | 78" | 100.0 | 100.0 | 100.0 |
| 30" | | 100.0 | 100.0 | 100.0 |
| 36" | | 100.0 | 100.0 | 100.0 |
| 42" | | 100.0 | 100.0 | 100.0 |
| 48" | | 100.0 | 100.0 | 100.0 |
| 54" | | 100.0 | 100.0 | 100.0 |
| 60" | | 100.0 | 100.0 | 100.0 |
| 66" | | 100.0 | 100.0 | 100.0 |
| 72" | | 100.0 | 100.0 | 100.0 |
| 24" | 84" | 100.0 | 100.0 | 100.0 |
| 30" | | 100.0 | 100.0 | 100.0 |
| 36" | | 100.0 | 100.0 | 100.0 |
| 42" | | 100.0 | 100.0 | 100.0 |
| 48" | | 100.0 | 100.0 | 100.0 |
| 54" | | 94.9 | 100.0 | 100.0 |
| 60" | | 89.2 | 100.0 | 100.0 |
| 66" | | 85.2 | 100.0 | 100.0 |
| 24" | 90" | 100.0 | 100.0 | 100.0 |
| 30" | | 100.0 | 100.0 | 100.0 |
| 36" | | 100.0 | 100.0 | 100.0 |
| 42" | | 91.1 | 100.0 | 100.0 |
| 48" | | 82.0 | 100.0 | 100.0 |
| 54" | | 75.4 | 98.1 | 100.0 |
| 60" | | 70.4 | 91.3 | 100.0 |
| 24" | 96" | 100.0 | 100.0 | 100.0 |
| 30" | | 99.9 | 100.0 | 100.0 |
| 36" | | 84.8 | 100.0 | 100.0 |
| 42" | | 74.2 | 100.0 | 100.0 |
| 48" | | 66.6 | 93.1 | 100.0 |
| 54" | | 60.9 | 84.8 | 100.0 |
| 60" | | 56.7 | 78.5 | 100.0 |
| 24" | 102" | 100.0 | 100.0 | 100.0 |
| 30" | | 82.9 | 100.0 | 100.0 |
| 36" | | 70.2 | 100.0 | 100.0 |
| 42" | | 61.3 | 91.6 | 100.0 |
| 48" | | 54.8 | 81.7 | 100.0 |
| 54" | | 50.0 | 74.1 | 100.0 |
| 24" | 108" | 86.1 | 100.0 | 100.0 |
| 30" | | 69.6 | 100.0 | 100.0 |
| 36" | | 58.8 | 93.5 | 100.0 |
| 42" | | 51.2 | 81.2 | 100.0 |
| 48" | | 45.7 | 72.2 | 99.9 |
| 24" | 114" | 73.0 | 100.0 | 100.0 |
| 30" | | 59.0 | 93.8 | 100.0 |
| 36" | | 49.8 | 79.1 | 100.0 |
| 42" | | 43.3 | 68.8 | 100.0 |
| 48" | | 38.5 | 61.3 | 89.0 |
| 24" | 120" | 62.5 | 99.4 | 100.0 |
| 30" | | 50.4 | 80.2 | 100.0 |
| 36" | | 42.5 | 67.6 | 100.0 |
| 42" | | 36.9 | 58.7 | 90.1 |
| 48" | | 32.8 | 52.2 | 79.9 |

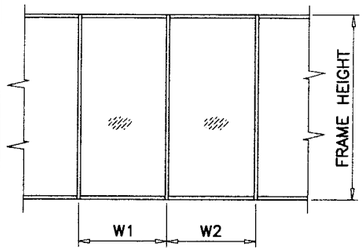


$$\text{WIDTH (W)} = \frac{W1 + W2}{2}$$

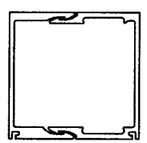

WITHOUT REINFORCING

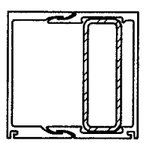

LIGHT REINFORCING

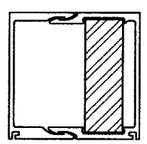

HEAVY REINFORCING

## MULLION LOAD CAPACITY – PSF
WITH INTERMEDIATE HORIZONTALS OR MULLION WITH DOORS

| NOMINAL DIMS. | | WITHOUT REINF. | LIGHT REINF. | HEAVY REINF. |
|---|---|---|---|---|
| WIDTH (W) | FRAME HEIGHT | EXT. (+) INT. (–) | EXT. (+) INT. (–) | EXT. (+) INT. (–) |
| 24" | 78" | 100.0 | 100.0 | 100.0 |
| 30" | | 100.0 | 100.0 | 100.0 |
| 36" | | 100.0 | 100.0 | 100.0 |
| 42" | | 100.0 | 100.0 | 100.0 |
| 48" | | 100.0 | 100.0 | 100.0 |
| 54" | | 99.7 | 100.0 | 100.0 |
| 60" | | 89.8 | 100.0 | 100.0 |
| 66" | | 81.6 | 94.2 | 100.0 |
| 72" | | 74.8 | 86.4 | 100.0 |
| 24" | 84" | 100.0 | 100.0 | 100.0 |
| 30" | | 100.0 | 100.0 | 100.0 |
| 36" | | 100.0 | 100.0 | 100.0 |
| 42" | | 100.0 | 100.0 | 100.0 |
| 48" | | 89.8 | 100.0 | 100.0 |
| 54" | | 79.9 | 99.3 | 100.0 |
| 60" | | 71.9 | 89.4 | 100.0 |
| 66" | | 65.3 | 81.3 | 100.0 |
| 24" | 90" | 100.0 | 100.0 | 100.0 |
| 30" | | 100.0 | 100.0 | 100.0 |
| 36" | | 97.4 | 100.0 | 100.0 |
| 42" | | 83.5 | 100.0 | 100.0 |
| 48" | | 73.0 | 97.3 | 100.0 |
| 54" | | 64.9 | 86.5 | 100.0 |
| 60" | | 58.4 | 77.9 | 100.0 |
| 24" | 96" | 100.0 | 100.0 | 100.0 |
| 30" | | 96.3 | 100.0 | 100.0 |
| 36" | | 80.2 | 100.0 | 100.0 |
| 42" | | 68.8 | 97.8 | 100.0 |
| 48" | | 60.2 | 85.5 | 100.0 |
| 54" | | 53.5 | 76.0 | 100.0 |
| 60" | | 48.1 | 68.4 | 94.7 |
| 24" | 102" | 100.0 | 100.0 | 100.0 |
| 30" | | 80.3 | 100.0 | 100.0 |
| 36" | | 66.9 | 100.0 | 100.0 |
| 42" | | 57.3 | 86.6 | 100.0 |
| 48" | | 50.2 | 75.8 | 100.0 |
| 54" | | 44.6 | 67.4 | 93.2 |
| 24" | 108" | 84.5 | 100.0 | 100.0 |
| 30" | | 67.6 | 100.0 | 100.0 |
| 36" | | 56.4 | 89.6 | 100.0 |
| 42" | | 48.3 | 76.8 | 100.0 |
| 48" | | 42.3 | 67.2 | 93.5 |
| 24" | 114" | 71.9 | 100.0 | 100.0 |
| 30" | | 57.5 | 91.4 | 100.0 |
| 36" | | 47.9 | 76.2 | 100.0 |
| 42" | | 41.1 | 65.3 | 95.9 |
| 48" | | 35.9 | 57.2 | 83.9 |
| 24" | 120" | 61.6 | 98.0 | 100.0 |
| 30" | | 49.3 | 78.4 | 100.0 |
| 36" | | 41.1 | 65.3 | 100.0 |
| 42" | | 35.2 | 56.0 | 86.6 |
| 48" | | 30.8 | 49.0 | 75.7 |

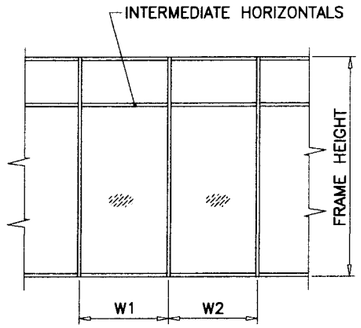


$$\text{WIDTH (W)} = \frac{W1 + W2}{2}$$

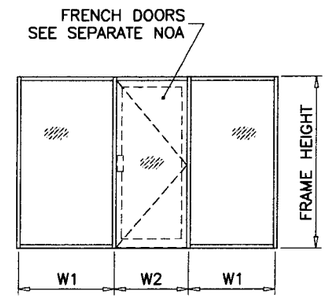


$$\text{WIDTH (W)} = \frac{W1 + W2}{2}$$

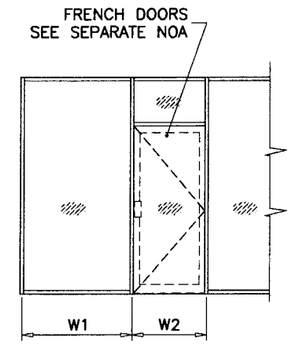


$$\text{WIDTH (W)} = \frac{W1 + W2}{2}$$

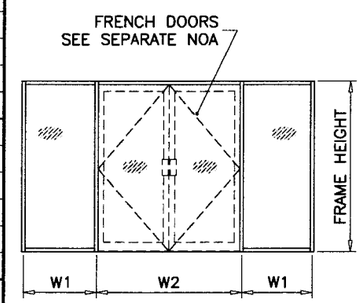


$$\text{WIDTH (W)} = \frac{W1}{2} + \frac{W2}{4}$$

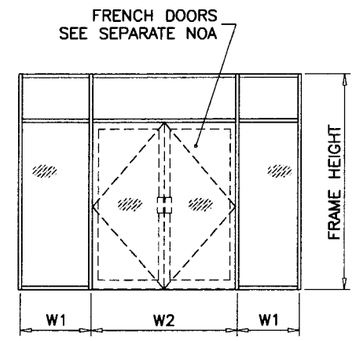


$$\text{WIDTH (W)} = \frac{W1 + W2}{2}$$

Engr: DR. HUMAYOUN FAROOQ
STRUCTURES
FLA. PE # 16557
C.A.N. 3538

MAR 17 2008

PRODUCT REVISED
as complying with the Florida Building Code
Acceptance No. 08-0415.08
Expiration Date 06/22/2011
By Manuel Perez
Miami-Dade Product Control Division


AL-FAROOQ CORPORATION
ENGINEERS & PRODUCT DEVELOPMENT
1235 S.W. 87 AVE
MIAMI, FLORIDA 33174
TEL. (305) 264-8100 FAX. (305) 262-6978


STORE\W05-31CTC

PRO-TECH 45SG ALUM WINDOW WALL SYSTEM (L.M.I.)

CRAWFORD TRACEY CORPORATION
3301 SW 13TH DRIVE
DEERFIELD BEACH, FL. 33442-8101
TEL. (954) 698-6888 FAX. (954) 698-6889

revisions:

| no | date | by | description |
|---|---|---|---|
| A | 02.27.08 | | NO CHANGE THIS SHEET |

date: 06-24-05
scale:
dr. by: HAMID
chk. by:

drawing no. W05-31

sheet 3 of 8

| ANCHOR LOAD CAPACITY – PSF EXT.(+) & INT.(–) | | | | | |
|---|---|---|---|---|---|
| NOMINAL DIMS. | | ANCHORS TYPE 'A' | | ANCHORS TYPE 'B' | |
| WIDTH (W) | FRAME HEIGHT | A2 | A3 | B1 | B2 |
| 24" | 78" | 100.0 | 100.0 | 100.0 | 100.0 |
| 30" | | 100.0 | 100.0 | 100.0 | 100.0 |
| 36" | | 100.0 | 100.0 | 100.0 | 100.0 |
| 42" | | 100.0 | 100.0 | 100.0 | 100.0 |
| 48" | | 100.0 | 100.0 | 100.0 | 100.0 |
| 54" | | 98.5 | 100.0 | 100.0 | 100.0 |
| 60" | | 98.5 | 100.0 | 100.0 | 100.0 |
| 66" | | 94.0 | 100.0 | 100.0 | 100.0 |
| 72" | | 94.0 | 100.0 | 100.0 | 100.0 |
| 24" | 84" | 100.0 | 100.0 | 100.0 | 100.0 |
| 30" | | 100.0 | 100.0 | 100.0 | 100.0 |
| 36" | | 100.0 | 100.0 | 100.0 | 100.0 |
| 42" | | 100.0 | 100.0 | 100.0 | 100.0 |
| 48" | | 100.0 | 100.0 | 100.0 | 100.0 |
| 54" | | 91.4 | 100.0 | 100.0 | 100.0 |
| 60" | | 91.4 | 100.0 | 100.0 | 100.0 |
| 66" | | 87.3 | 100.0 | 100.0 | 100.0 |
| 24" | 90" | 100.0 | 100.0 | 100.0 | 100.0 |
| 30" | | 100.0 | 100.0 | 100.0 | 100.0 |
| 36" | | 100.0 | 100.0 | 100.0 | 100.0 |
| 42" | | 100.0 | 100.0 | 100.0 | 100.0 |
| 48" | | 96.0 | 100.0 | 100.0 | 100.0 |
| 54" | | 85.3 | 100.0 | 100.0 | 100.0 |
| 60" | | 85.3 | 100.0 | 100.0 | 100.0 |
| 24" | 96" | 100.0 | 100.0 | 100.0 | 100.0 |
| 30" | | 100.0 | 100.0 | 100.0 | 100.0 |
| 36" | | 100.0 | 100.0 | 100.0 | 100.0 |
| 42" | | 100.0 | 100.0 | 100.0 | 100.0 |
| 48" | | 90.0 | 100.0 | 98.8 | 100.0 |
| 54" | | 80.0 | 100.0 | 98.8 | 100.0 |
| 60" | | 80.0 | 96.0 | 98.8 | 100.0 |
| 24" | 102" | 100.0 | 100.0 | 100.0 | 100.0 |
| 30" | | 100.0 | 100.0 | 100.0 | 100.0 |
| 36" | | 94.1 | 100.0 | 100.0 | 100.0 |
| 42" | | 94.1 | 100.0 | 100.0 | 100.0 |
| 48" | | 84.7 | 100.0 | 92.9 | 100.0 |
| 54" | | 75.3 | 100.0 | 92.9 | 100.0 |
| 24" | 108" | 100.0 | 100.0 | 100.0 | 100.0 |
| 30" | | 100.0 | 100.0 | 100.0 | 100.0 |
| 36" | | 88.9 | 100.0 | 100.0 | 100.0 |
| 42" | | 88.9 | 100.0 | 100.0 | 100.0 |
| 48" | | 80.0 | 100.0 | 87.8 | 100.0 |
| 24" | 114" | 100.0 | 100.0 | 100.0 | 100.0 |
| 30" | | 100.0 | 100.0 | 99.8 | 100.0 |
| 36" | | 84.2 | 100.0 | 99.8 | 100.0 |
| 42" | | 84.2 | 100.0 | 95.0 | 100.0 |
| 48" | | 75.8 | 100.0 | 83.2 | 100.0 |
| 24" | 120" | 96.0 | 100.0 | 100.0 | 100.0 |
| 30" | | 96.0 | 100.0 | 94.8 | 100.0 |
| 36" | | 80.0 | 100.0 | 94.8 | 100.0 |
| 42" | | 80.0 | 96.0 | 90.3 | 100.0 |
| 48" | | 72.0 | 96.0 | 79.0 | 100.0 |

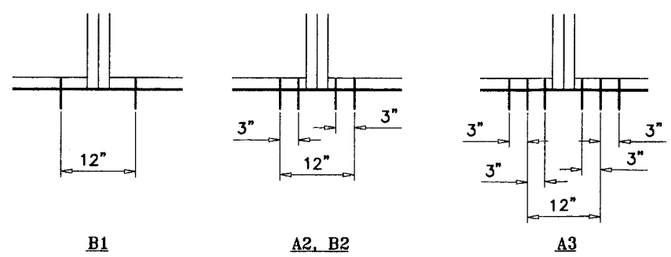


B1 A2, B2 A3

ANCHORS TYPES: SEE SHEET 5 FOR DESCRIPTION

A2 = (2) ANCHORS TYPE 'A' AT EACH SIDE OF MULLION
A3 = (3) ANCHORS TYPE 'A' AT EACH SIDE OF MULLION

B1 = (1) ANCHOR TYPE 'B' AT EACH SIDE OF MULLION
B2 = (2) ANCHORS TYPE 'B' AT EACH SIDE OF MULLION

ALL OTHER ANCHORS TO BE SPACED AS PER ELEVATION.

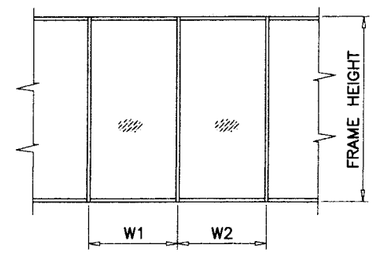


$$\text{WIDTH (W)} = \frac{W1 + W2}{2}$$

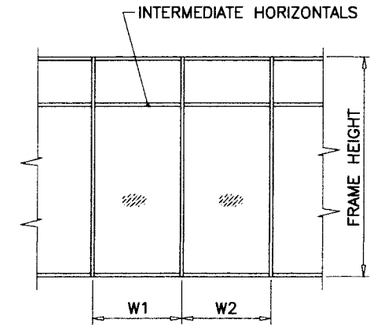


$$\text{WIDTH (W)} = \frac{W1 + W2}{2}$$

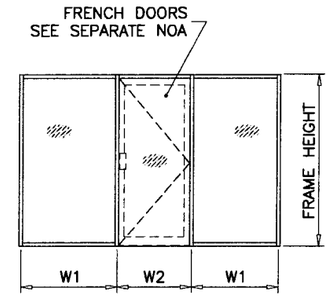


$$\text{WIDTH (W)} = \frac{W1 + W2}{2}$$

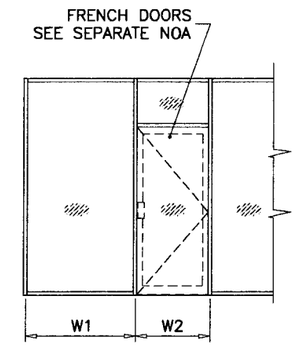


$$\text{WIDTH (W)} = \frac{W1 + W2}{2}$$

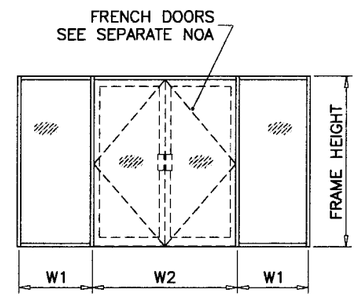


$$\text{WIDTH (W)} = \frac{W1}{2} + \frac{W2}{4}$$

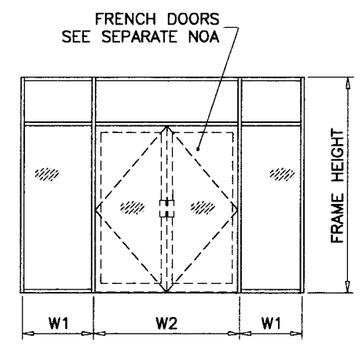


$$\text{WIDTH (W)} = \frac{W1 + W2}{2}$$

Engr: DR. HUMAYOUN FAROOQ
STRUCTURES
FLA. PE # 16557
C.A.N. 3538

MAR 17 2008

PRODUCT REVISED
as complying with the Florida Building Code
Acceptance No. 08-0415.08
Expiration Date 06/22/2011
By Manuel Perez
Miami-Dade Product Control Division


AL-FAROOQ CORPORATION
ENGINEERS & PRODUCT DEVELOPMENT
1235 S.W. 87 AVE
MIAMI, FLORIDA 33174
TEL. (305) 264-8100 FAX. (305) 262-6978


STORE\W05-31CTC

PRO-TECH 45SG ALUM WINDOW WALL SYSTEM (L.M.I.)

CRAWFORD TRACEY CORPORATION
3301 SW 13TH DRIVE
DEERFIELD BEACH, FL. 33442-8101
TEL. (954) 698-6888 FAX. (954) 698-6889

revisions:

| no | date | by | description |
|---|---|---|---|
| A | 02.27.08 | | NO CHANGE THIS SHEET |

date: 06-24-05
scale: 1/2" = 1"
dr. by: HAMID
chk. by:

drawing no.
W05-31

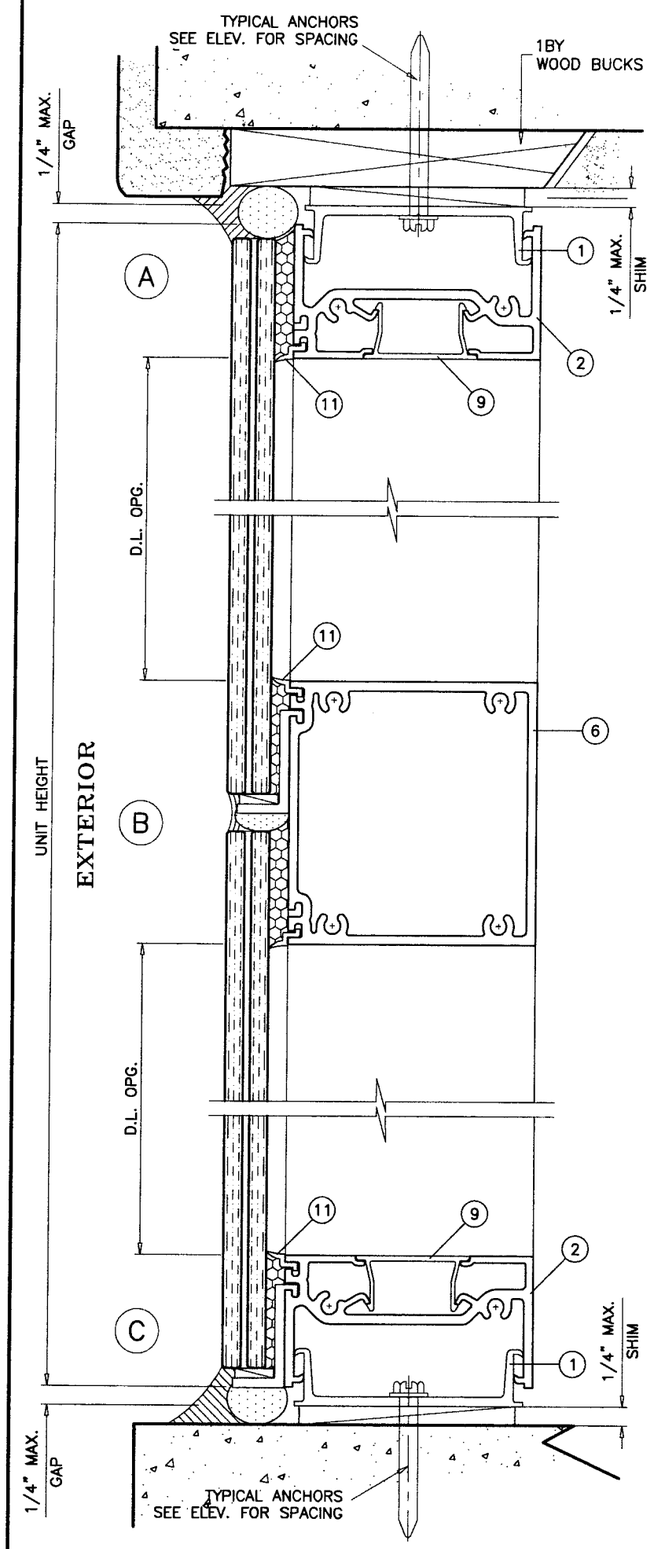


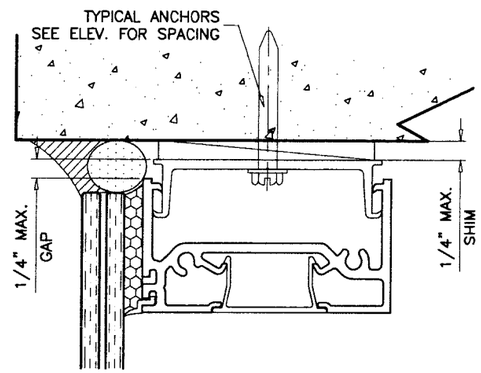


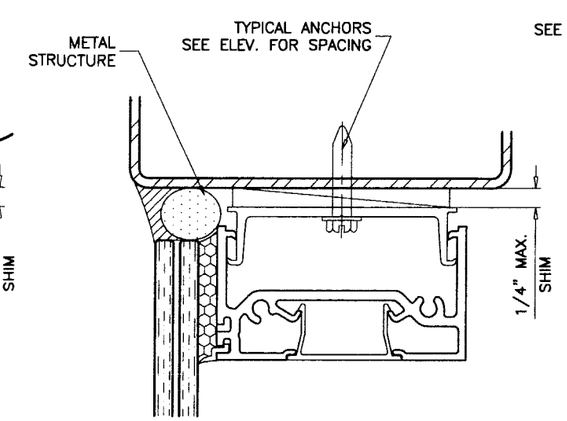


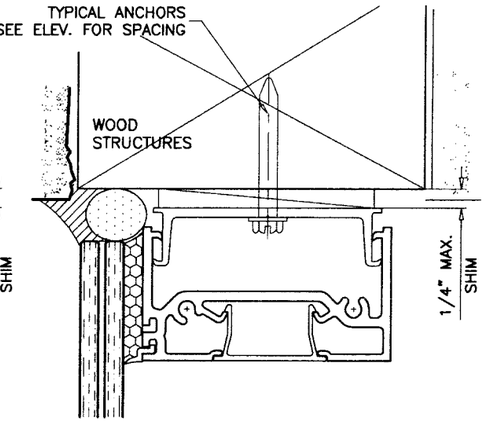


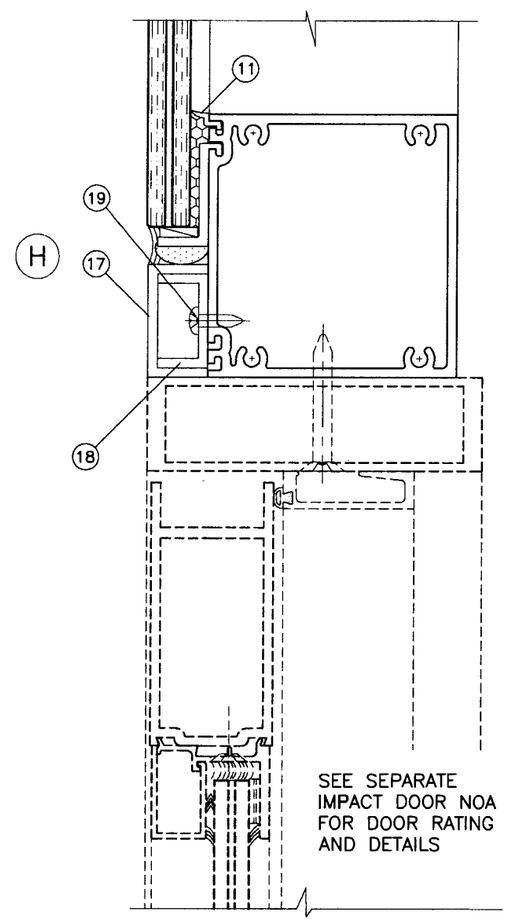


WOOD BUCKS AND METAL STRUCTURES NOT BY CRAWFORD TRACEY MUST SUPPORT LOADS IMPOSED BY GLAZING SYSTEM AND TRANSFER THEM TO THE BUILDING STRUCTURE.

## TYPICAL ANCHORS: SEE ELEV. FOR SPACING

TYPE 'A'– 1/4" TAPCONS
INTO 2BY WOOD BUCKS OR WOOD STRUCTURES
1–1/2" MIN. PENETRATION INTO WOOD

THRU 1BY WOOD BUCKS INTO
3000 PSI MIN. CONC. OR C–90 GROUT FILLED BLOCK
1–1/4" MIN. EMBED INTO CONC. OR MASONRY

TYPE 'B'– 1/4" TAPCONS
DIRECTLY INTO CONC. OR MASONRY
3000 PSI MIN. CONC. OR C–90 GROUT FILLED BLOCK
1–1/4" MIN. EMBED INTO CONC. OR MASONRY

1/4" TEKS OR SELF DRILLING SCREWS
INTO METAL STRUCTURES
STEEL : 12 GA. MIN. (Fy = 36 KSI MIN.)
ALUMINUM : 1/8" THK. MIN. (6063–T5 MIN.)
(STEEL IN CONTACT WITH ALUMINUM TO BE PLATED OR PAINTED)

TYPICAL EDGE DISTANCE
INTO CONCRETE AND MASONRY = 3" MIN.
INTO WOOD STRUCTURE = 1" MIN.
INTO METAL STRUCTURE = 3/4" MIN.

## SEALANTS:

ALL FRAME JOINTS ON EXTERIOR TO BE SEALED WITH DOW CORNING 795 SILICONE SEALANT.

Engr: DR. HUMAYOUN FAROOQ
STRUCTURES
FLA. PE # 16557
C.A.N. 3536

MAR 17 2008

PRODUCT REVISED
as complying with the Florida Building Code
Acceptance No. 08-0415.08
Expiration Date 06/22/2011
By Manuel Perez
Miami Dade Product Control Division


AL-FAROOQ CORPORATION
ENGINEERS & PRODUCT DEVELOPMENT
1235 S.W. 87 AVE
MIAMI, FLORIDA 33174
TEL. (305) 264-8100 FAX. (305) 262-6978
STORE\W05-31CTC


PRO-TECH 455G ALUM WINDOW WALL SYSTEM (L.M.I.)


CRAWFORD TRACEY CORPORATION
3301 SW 13TH DRIVE
DEERFIELD BEACH, FL. 33442-8101
TEL. (954) 698-6888 FAX. (954) 698-6889


revisions:

| no | date | by | description |
|---|---|---|---|
| A | 02.27.08 | | NO CHANGE THIS SHEET |

date: 06-24-05
scale: 1/2" = 1"
dr. by: HAMID
chk. by:

drawing no.
W05-31

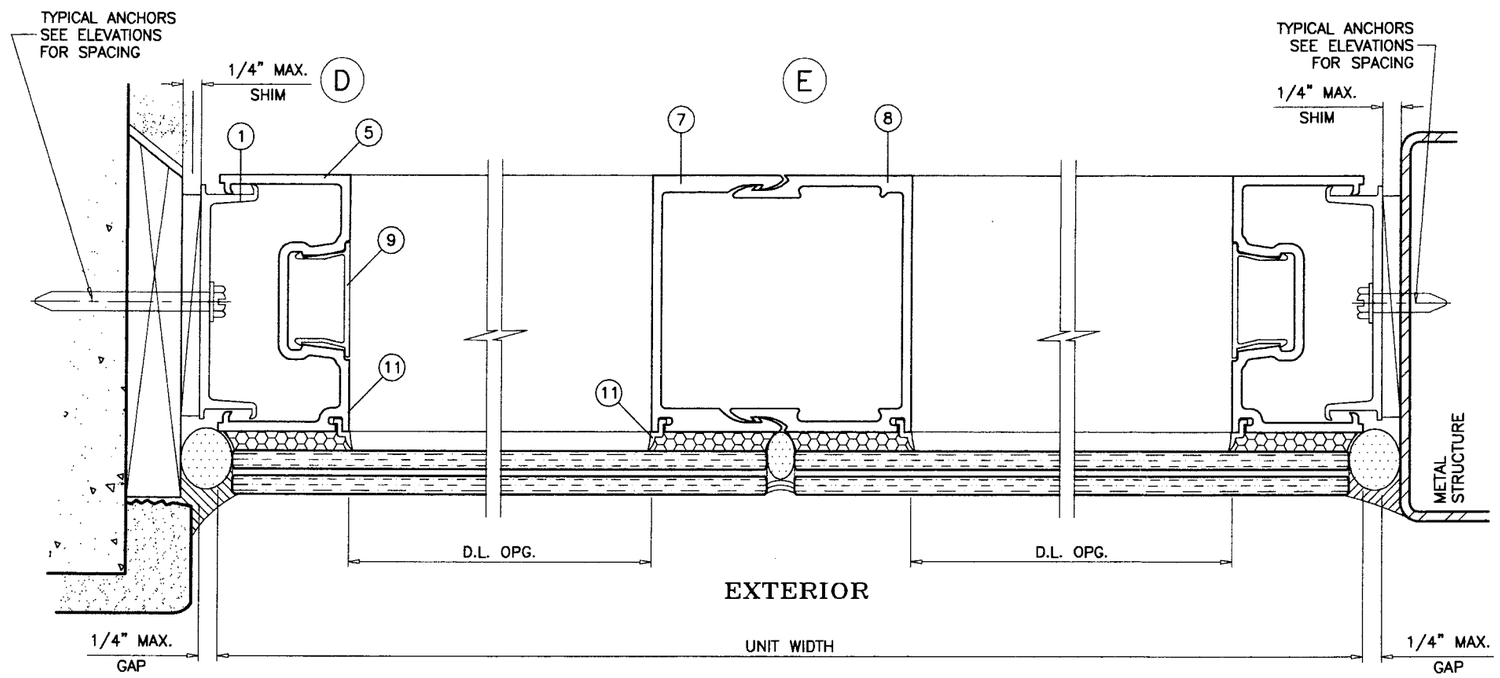


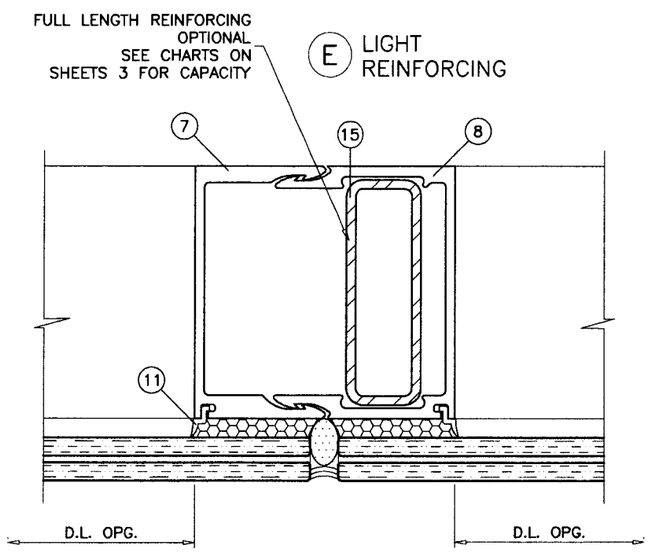


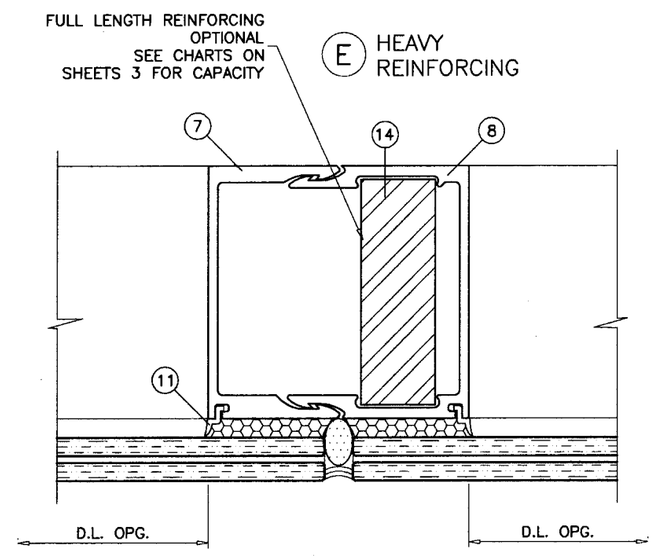


Engr: DR. HUMAYOUN FAROOQ
STRUCTURES
FLA. PE # 16557
C.A.N. 3538

MAR 17 2008

PRODUCT REVISED
as complying with the Florida
Building Code
Acceptance No. 08-0415.08
Expiration Date 06/22/2011
By Manuel Perez
Miami-Dade Product Control
Division

**AL-FAROOQ CORPORATION**
ENGINEERS & PRODUCT DEVELOPMENT
1235 S.W. 87 AVE
MIAMI, FLORIDA 33174
TEL. (305) 264-8100 FAX. (305) 262-6978

STORE\W05-31CTC

PRO-TECH 455G ALUM WINDOW WALL SYSTEM (L.M.I.)

**CRAWFORD TRACEY CORPORATION**
3301 SW 13TH DRIVE
DEERFIELD BEACH, FL. 33442-8101
TEL. (954) 698-6888 FAX. (954) 698-6889

revisions:

| no | date | by | description |
|---|---|---|---|
| A | 02.27.08 | | NO CHANGE THIS SHEET |

date: 06-24-05
scale: 1/2" = 1"
dr. by: HAMID
chk. by:

drawing no.
W05-31

sheet 6 of 8

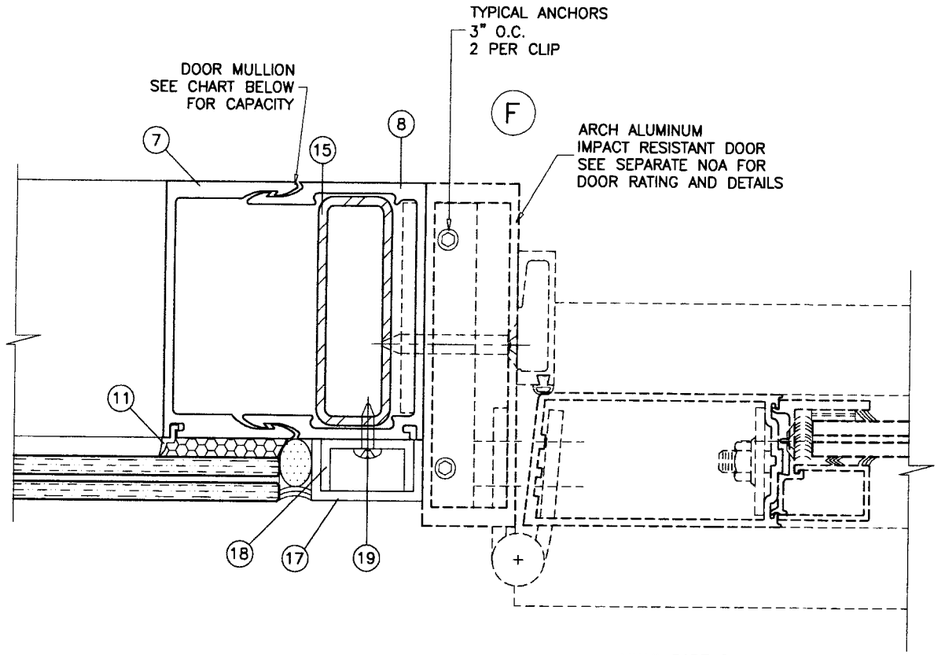


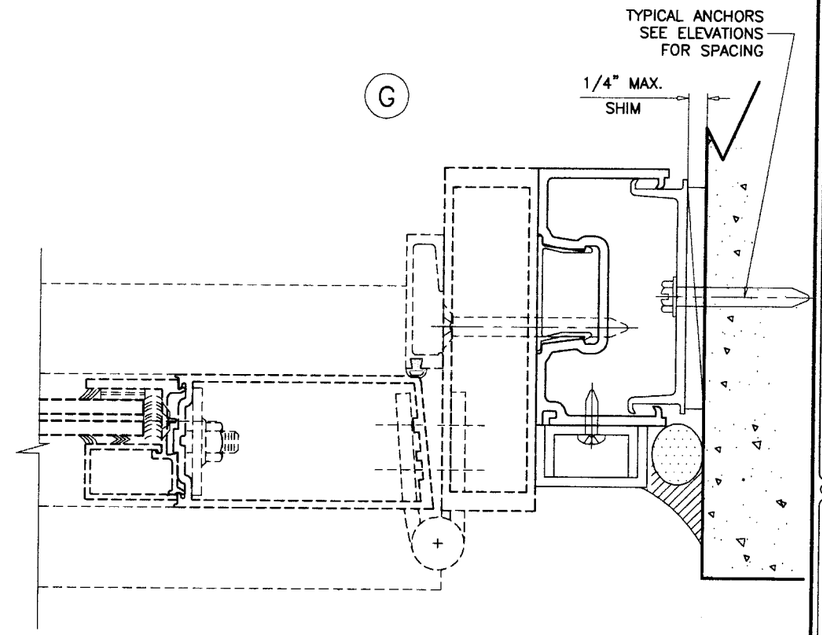


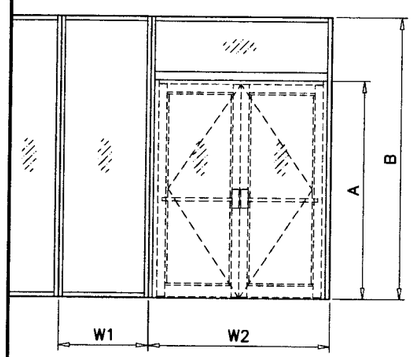


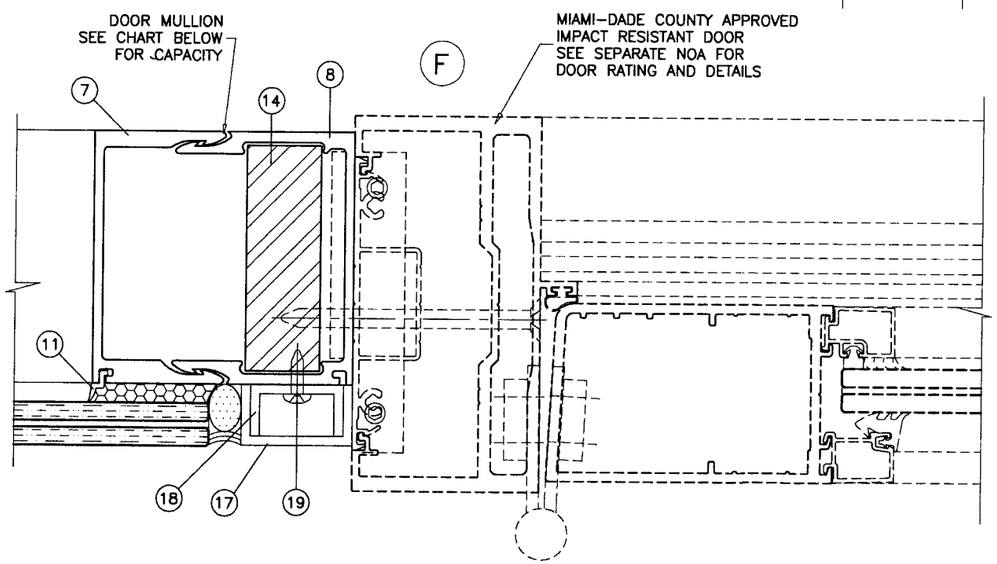


| DOOR MULLION DESIGN LOAD CAPACITY - PSF | | | | |
|---|---|---|---|---|
| FRAME HEIGHT-B INCHES MAX. | DOOR HEIGHT-A INCHES MAX. | WIDTH-W1 INCHES MAX. | WIDTH-W2 INCHES MAX. | EXT. (+) INT. (-) |
| 120 | 96 | 36 | 72 | 70.1 |
| | 90 | | | 66.1 |
| | 84 | | | 62.0 |
| | 80 | | | 59.4 |
| 114 | 96 | 42 | 72 | 80.0 |
| | 90 | | | 68.5 |
| 108 | 96 | 48 | 72 | 80.0 |
| | 90 | | | 80.0 |
| 102 | 96 | 54 | 72 | 80.0 |
| | 90 | | | 80.0 |

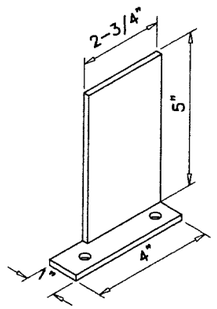


DOOR MULLION INSTALLATION CLIP
1 X 5 X 3/16" ALUM ANGLE

Engr: DR. HUMAYOUN FAROOQ
STRUCTURES
FLA. PE # 16557
C.A.N. 3538

MAR 17 2008

PRODUCT REVISED
as complying with the Florida
Building Code
Acceptance No. 08-0415.08
Expiration Date 06/22/2011
By Manuel Perez
Miami-Dade Product Control
Division


AL-FAROOQ CORPORATION
ENGINEERS & PRODUCT DEVELOPMENT
1235 S.W. 87 AVE
MIAMI, FLORIDA 33174
TEL. (305) 264-8100 FAX. (305) 262-6978
STORE\W05-31CTC


PRO-TECH 455G ALUM WINDOW WALL SYSTEM (L.M.I.)

CRAWFORD TRACEY CORPORATION
3301 SW 13TH DRIVE
DEERFIELD BEACH, FL. 33442-8101
TEL. (954) 698-6888 FAX. (954) 698-6889

revisions:

| no | date | by | description |
|---|---|---|---|
| A | 02.27.08 | | NO CHANGE THIS SHEET |

date: 06-24-05
scale: 1/2" = 1"
dr. by: HAMID
chk. by:

drawing no.
W05-31

sheet 7 of 8

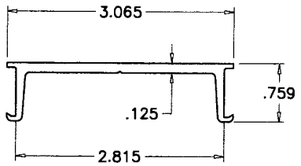


(1) SUB BUCK

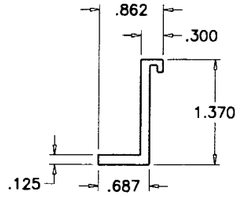


(10) SETTING PIECE LAM. GLASS

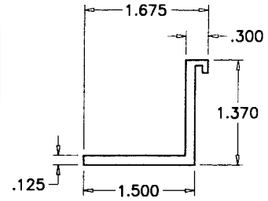


(10A) SETTING PIECE INSUL. LAM. GLASS

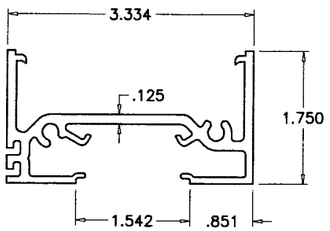


(2) FRAME HEAD/SILL

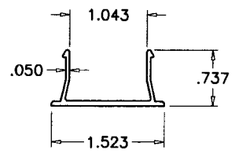


(9) SNAP-IN COVER

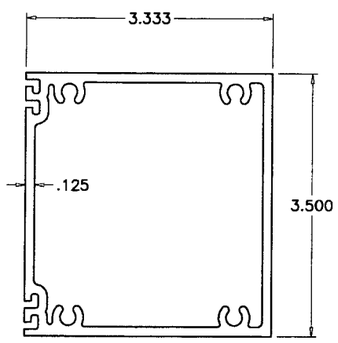


(6) FRAME HORIZONTAL

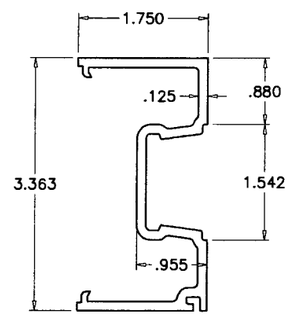


(5) FRAME JAMB

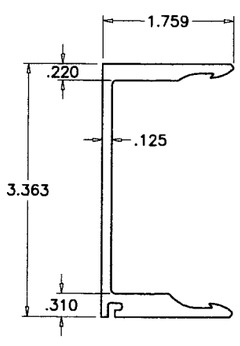


(7) FEMALE MULLION

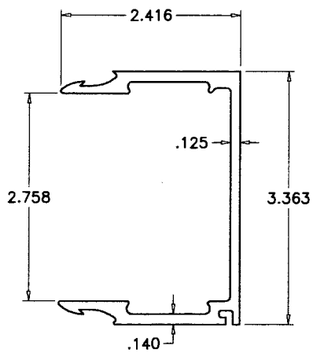


(8) MALE MULLION

| ITEM NO. | PART NUMBER | QUANTITY | DESCRIPTION | MATERIAL | MANF./SUPPLIER/REMARKS |
|---|---|---|---|---|---|
| 1 | B44B001 | AS REQD. | SUB BUCK | 6105-T5 | – |
| 2 | 144P176 | AS REQD. | FRAME HEAD/SILL | 6063-T6 | – |
| 5 | 144J176 | AS REQD. | FRAME JAMB | 6063-T6 | – |
| 6 | 144H342 | AS REQD. | HORIZONTAL | 6063-T6 | – |
| 7 | 144M114 | AS REQD. | FEMALE MULLION | 6063-T6 | – |
| 8 | 144M113 | AS REQD. | MALE MULLION | 6063-T6 | – |
| 9 | T44U119 | AS REQD. | SNAP-IN COVER | 6063-T6 | – |
| 10 | 170X115 | AS REQD. | 4" LONG SETTING PIECE (LAM. GLASS) | 6105-T5 | AT 1/4 POINTS |
| 10A | 170-116 | AS REQD. | 4" LONG SETTING PIECE (INSUL. LAM. GLASS) | 6105-T5 | AT 1/4 POINTS |
| 11 | #2 | AS REQD. | INTERIOR GLAZING GASKET | POLYPROPYLENE | – |
| 13 | 983 | – | GLAZING COMPOUND | SILICONE | DOW CORNING |
| 14 | – | AS REQD. | STEEL BAR, FULL LENGTH | STEEL | 1" X 3" |
| 15 | – | AS REQD. | REINFORCING TUBE, FULL LENGTH | STEEL | 1 X 3 X 11 GA. |
| 16 | #14 X 1-1/4" | AS REQD. | FRAME ASSEMBLY SCREWS | ST. STEEL | P.H. SMS |
| 17 | – | AS REQD. | FILLER CHANNEL | ALUMINUM | 13/16 X 1-1/2 X 13/16 X 1/8" |
| 18 | – | AS REQD. | FILLER CHANNEL | ALUMINUM | 11/16 X 1-1/4 X 11/16 X 1/8" |
| 19 | #10 X 1" | AS REQD. | FILLER CHANNEL SCREWS | AT. STEEL | AT 14" O.C. |

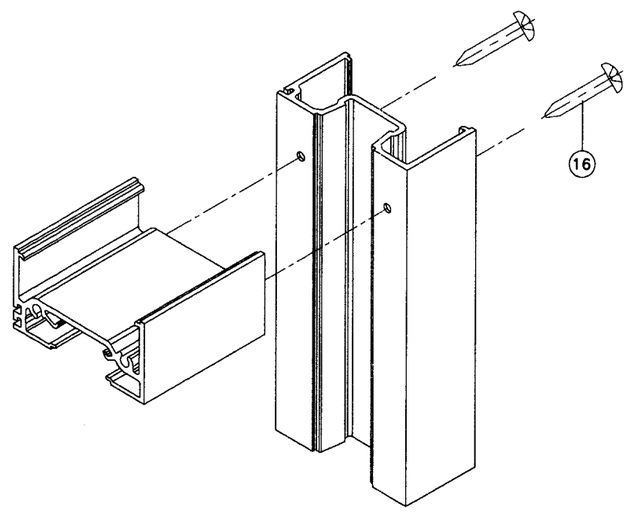


FRAME TOP/BOTTOM CORNER

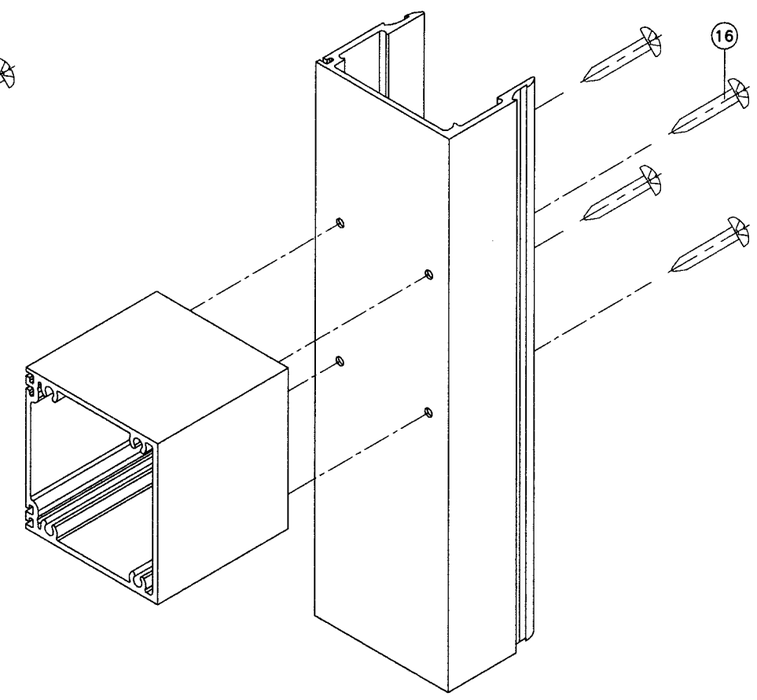


FRAME HORIZONTAL CORNER

Engr: DR. HUMAYOUN FAROOQ
STRUCTURES
FLA. PE # 16557
C.A.N. 3538

MAR 1 2 2008

PRODUCT REVISED
as complying with the Florida
Building Code
Acceptance No. 08-0415.08
Expiration Date 06/22/2011
By Manuel Perez
Miami Dade Product Control
Division


AL-FAROOQ CORPORATION
ENGINEERS & PRODUCT DEVELOPMENT
1235 S.W. 87 AVE
MIAMI, FLORIDA 33174
TEL. (305) 264-8100 FAX. (305) 262-6978


STORE\W05-31CTC

PRO-TECH 45SG ALUM WINDOW WALL SYSTEM (L.M.I.)


CRAWFORD TRACEY CORPORATION
3301 SW 13TH DRIVE
DEERFIELD BEACH, FL. 33442-8101
TEL. (954) 698-6888 FAX. (954) 698-6889


revisions:

| no | date | by | description |
|---|---|---|---|
| A | 02.27.08 | | SETTING PIECE ADDED |

date: 06-24-05
scale: 1/2" = 1"
dr. by: HAMID
chk. by:

drawing no.
W05-31