MIAMI-DADE COUNTY

BUILDING CODE COMPLIANCE OFFICE (BCCO)
PRODUCT CONTROL DIVISION

MIAMI-DADE COUNTY, FLORIDA
METRO-DADE FLAGLER BUILDING
140 WEST FLAGLER STREET, SUITE 1603
MIAMI, FLORIDA 33130-1563
(305) 375-2901 FAX (305) 375-2908
www.buldingcodeonline.com

NOTICE OF ACCEPTANCE (NOA)

Innovative Window Concepts, LLC
1801 Corporate Drive
Boynton Beach, FL 33426

SCOPE:

This NOA is being issued under the applicable rules and regulations governing the use of construction materials. The documentation submitted has been reviewed by Miami-Dade County Product Control Division and accepted by the Board of Rules and Appeals (BORA) to be used in Miami Dade County and other areas where allowed by the Authority Having Jurisdiction (AHJ).

This NOA shall not be valid after the expiration date stated below. The Miami-Dade County Product Control Division (In Miami Dade County) and/or the AHJ (in areas other than Miami Dade County) reserve the right to have this product or material tested for quality assurance purposes. If this product or material fails to perform in the accepted manner, the manufacturer will incur the expense of such testing and the AHJ may immediately revoke, modify, or suspend the use of such product or material within their jurisdiction. BORA reserves the right to revoke this acceptance, if it is determined by Miami-Dade County Product Control Division that this product or material fails to meet the requirements of the applicable building code.

This product is approved as described herein, and has been designed to comply with the Florida Building Code, including the High Velocity Hurricane Zone.

DESCRIPTION: Series "7040/7041/7062" Aluminum Single Hung Window – L.M.I.

APPROVAL DOCUMENT: Drawing No. **W07-97**, titled "S-7040/7041/7062 Alum. Single Hung Wdw. (L.M.I.)", sheets 1 through 6 of 6, dated 11/19/07 with revision A dated 03/26/08, prepared by Al-Farooq Corporation, signed and sealed by Humayoun Farooq, P.E., bearing the Miami-Dade County Product Control Revision stamp with the Notice of Acceptance number and expiration date by the Miami-Dade County Product Control Division.

MISSILE IMPACT RATING: Large and Small Missile Impact Resistant

LABELING: Each unit shall bear a permanent label with the manufacturer's name or logo, city, state and following statement: "Miami-Dade County Product Control Approved", unless otherwise noted herein.

RENEWAL of this NOA shall be considered after a renewal application has been filed and there has been no change in the applicable building code negatively affecting the performance of this product.

TERMINATION of this NOA will occur after the expiration date or if there has been a revision or change in the materials, use, and/or manufacture of the product or process. Misuse of this NOA as an endorsement of any product, for sales, advertising or any other purposes shall automatically terminate this NOA. Failure to comply with any section of this NOA shall be cause for termination and removal of NOA.

ADVERTISEMENT: The NOA number preceded by the words Miami-Dade County, Florida, and followed by the expiration date may be displayed in advertising literature. If any portion of the NOA is displayed, then it shall be done in its entirety.

INSPECTION: A copy of this entire NOA shall be provided to the user by the manufacturer or its distributors and shall be available for inspection at the job site at the request of the Building Official.

This NOA **revises NOA # 07-1219.05** and consists of this page 1 and evidence pages E-1 and E-2, as well as approval document mentioned above.

The submitted documentation was reviewed by **Manuel Perez, P.E.**

MIAMI-DADE COUNTY APPROVED

Innovative Window Concepts, LLC

NOTICE OF ACCEPTANCE: EVIDENCE SUBMITTED

A. DRAWINGS

1. Manufacturer's die drawings and sections.
2. Drawing No **W07-97**, Sheets 1 through 6 of 6, titled "S-7040/7041/7062 Alum. Single Hung Wdw. (L.M.I.)", dated 11/19/07 with revision A dated 03/28/08, prepared by Al-Farooq Corporation, signed and sealed by Humayoun Farooq, P.E.

B. TESTS

1. Test reports on: 1) Uniform Static Air Pressure Test, Loading per FBC TAS 202-94
   2) Large Missile Impact Test per FBC, TAS 201-94
   3) Cyclic Wind Pressure Loading per FBC, TAS 203-94

   along with marked-up drawings and installation diagram of aluminum Single Hung window, prepared by American Test Lab of South Florida, Test Report No. **ATLSF- 0214.01-08**, dated 3/12/08, signed and sealed by Henry Hattem, P.E.
2. Test reports on: 1) Uniform Static Air Pressure Test, Loading per FBC TAS 202-94
   2) Large Missile Impact Test per FBC, TAS 201-94
   3) Cyclic Wind Pressure Loading per FBC, TAS 203-94

   along with marked-up drawings and installation diagram of aluminum Single Hung window, prepared by American Test Lab of South Florida, Test Report No. **ATLSF- 0219.01-07**, dated 1/12/08, signed and sealed by Henry Hattem, P.E.
3. Test reports on: 1) Air Infiltration Test, per FBC, TAS 202-94
   2) Uniform Static Air Pressure Test, Loading per FBC TAS 202-94
   3) Water Resistance Test, per FBC, TAS 202-94
   4) Large Missile Impact Test per FBC, TAS 201-94
   5) Cyclic Wind Pressure Loading per FBC, TAS 203-94
   6) Forced Entry Test, per FBC 2411 3.2.1, TAS 202-94

   along with marked-up drawings and installation diagram of aluminum Single Hung window, prepared by American Test Lab of South Florida, Test Report No. **ATLSF-1010.01-07**, dated 10/30/07, signed and sealed by William R. Mehner, P.E. and Henry Hattem, P.E.
   (Submitted under previous NOA#07-1219.05)

C. CALCULATIONS

1. Anchor verification calculations and structural analysis, complying with FBC-2004/2007, prepared by Al-Farooq Corporation, dated 05/07/08, signed and sealed by Humayoun Farooq, P.E.
   Complies with ASTM E1300-02

Manuel Perez

Manuel Perez, P.E.
Product Control Examiner
NOA No. 08-0422.11
Expiration Date: February 14, 2013
Approval Date: June 12, 2008

NOTICE OF ACCEPTANCE: EVIDENCE SUBMITTED

D. QUALITY ASSURANCE

1. Miami Dade Building Code Compliance Office (BCCO).

E. MATERIAL CERTIFICATIONS

1. Notice of Acceptance No. **07-1116.04** issued to E.I. DuPont DeNemours & Co., Inc. for their "**DuPont SentryGlas ® Plus**" dated 01/03/08, expiring on 01/14/12.
2. Notice of Acceptance No. **05-1208.02** issued to E.I. DuPont DeNemours & Co., Inc. for their "**DuPont Butacite PVB Interlayer**" dated 01/05/06, expiring on 12/11/10.

F. STATEMENTS

1. Statement letter of conformance, dated March 26, 2008, signed and sealed by Humayoun Farooq, P.E.
2. Statement letter of no financial interest, dated March 26, 2008, signed and sealed by Humayoun Farooq, P.E.
3. Laboratory compliance letter for Test Report no. ATLSF-1214.01-08, issued by American Test Lab of South Florida, dated 03/12/08, signed and sealed by Henry Hattem, P.E.
4. Laboratory compliance letter for Test Report no. ATLSF-1219.01-07, issued by American Test Lab of South Florida, dated 01/22/08, signed and sealed by Henry Hattem, P.E.

G. OTHER

1. Notice of Acceptance No. **07-1219.05**, issued to Innovative Window Concepts, LLC for their Series 7062 Aluminum Single Hung Window – L.M.I., approved on 02/14/08 and expiring on 02/14/13.

Manuel Perez

Manuel Perez, P.E.
Product Control Examiner
NOA No. 08-0422.11
Expiration Date: February 14, 2013
Approval Date: June 12, 2008

THESE WINDOWS ARE RATED FOR LARGE MISSILE IMPACT.
SHUTTERS ARE NOT REQUIRED.

SERIES 7040/7041/7062
ALUMINUM SINGLE HUNG WINDOW

SEE SHEET 2 FOR DESIGN LOAD RATING.

APPROVAL APPLIES TO SINGLE UNITS OR SIDE BY SIDE COMBINATIONS OF S.H./S.H. OR SINGLE HUNG WITH OTHER WINDOW TYPES IN MODULES OF TWO OR MORE WINDOWS USING MIAMI-DADE COUNTY APPROVED MULLIONS IN BETWEEN. LOWER DESIGN PRESSURE FROM WINDOWS OR MULLION APPROVAL WILL APPLY TO ENTIRE SYSTEM.

CODE REQUIREMENTS FOR SAFEGUARDS MUST BE OBSERVED.

THIS PRODUCT HAS BEEN DESIGNED AND TESTED TO COMPLY WITH THE REQUIREMENTS OF THE FLORIDA BUILDING CODE 2004/2007 EDITION INCLUDING HIGH VELOCITY HURRICANE ZONE (HVHZ).

WOOD BUCKS BY OTHERS, MUST BE ANCHORED PROPERLY TO TRANSFER LOADS TO THE STRUCTURE.

ANCHORS SHALL BE AS LISTED, SPACED AS SHOWN ON DETAILS, ANCHORS EMBEDMENT TO BASE MATERIAL SHALL BE BEYOND WALL DRESSING OR STUCCO.

ANCHORING OR LOADING CONDITIONS NOT SHOWN IN THESE DETAILS ARE NOT PART OF THIS APPROVAL.

A LOAD DURATION INCREASE IN ALLOWABLE STRESS IS USED IN DESIGN OF ANCHORS INTO WOOD ONLY.

MATERIALS INCLUDING BUT NOT LIMITED TO STEEL/METAL SCREWS, THAT COME INTO CONTACT WITH OTHER DISSIMILAR MATERIALS SHALL MEET THE REQUIREMENTS OF 2004 FLORIDA BLDG. CODE SECTION 2003.8.4.

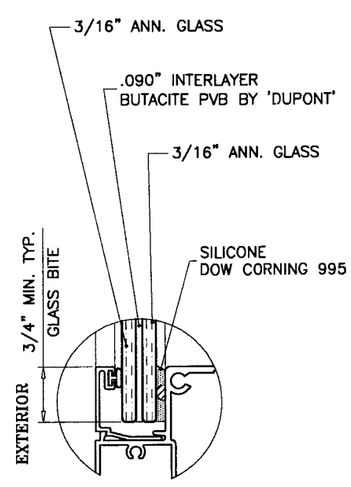

GLASS TYPE 'A'
SERIES 7040

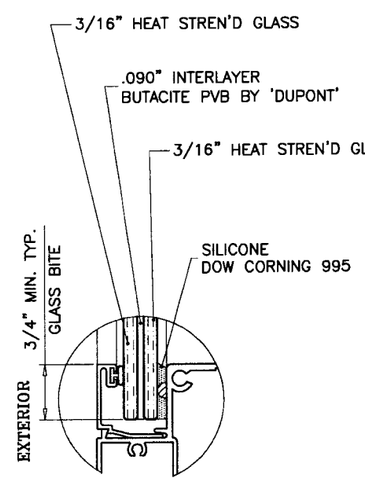

GLASS TYPE 'B'
SERIES 7041

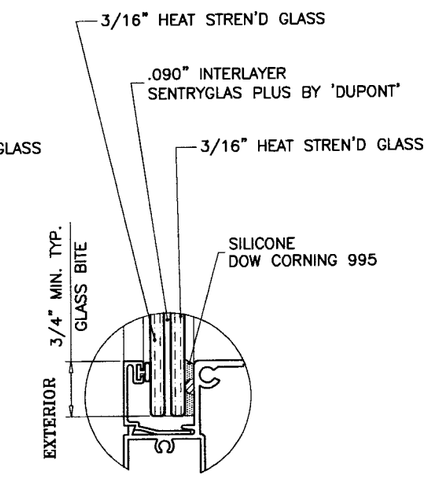

GLASS TYPE 'C'
SERIES 7062

GLAZING OPTIONS

LAMINATED GLASS
LARGE MISSILE IMPACT

Engr: DR. HUMAYOUN FAROOQ
STRUCTURES
FLA. PE # 16557
C.A.N. 3538

APR 09 2008

PRODUCT REVISED
as complying with the Florida Building Code
Acceptance No. OB-0472.11
Expiration Date FEB. 14, 2013
By: Marcel Perez
Miami Dade Product Control Division

AL-FAROOQ CORPORATION
ENGINEERS & PRODUCT DEVELOPMENT
1235 S.W. 87 AVE
MIAMI, FLORIDA 33174
TEL. (305) 264-8100 FAX. (305) 262-6978
COMP-ANL\W07-97WS

S-7040/7041/7062 ALUM SINGLE HUNG WDW. (L.M.I.)

INNOVATIVE WINDOW CONCEPTS, LLC
1801 CORPORATE DRIVE
BOYNTON BEACH, FL. 33426
TEL. (561) 493-2303 FAX. (561) 493-2302

revisions:

no	date	by	description
A	03.26.08		GLAZING OPTIONS ADDED

date: 11-19-07
scale: 1/2"=1'-0"
dr. by: HAMID
chk. by:

drawing no.
W07-97

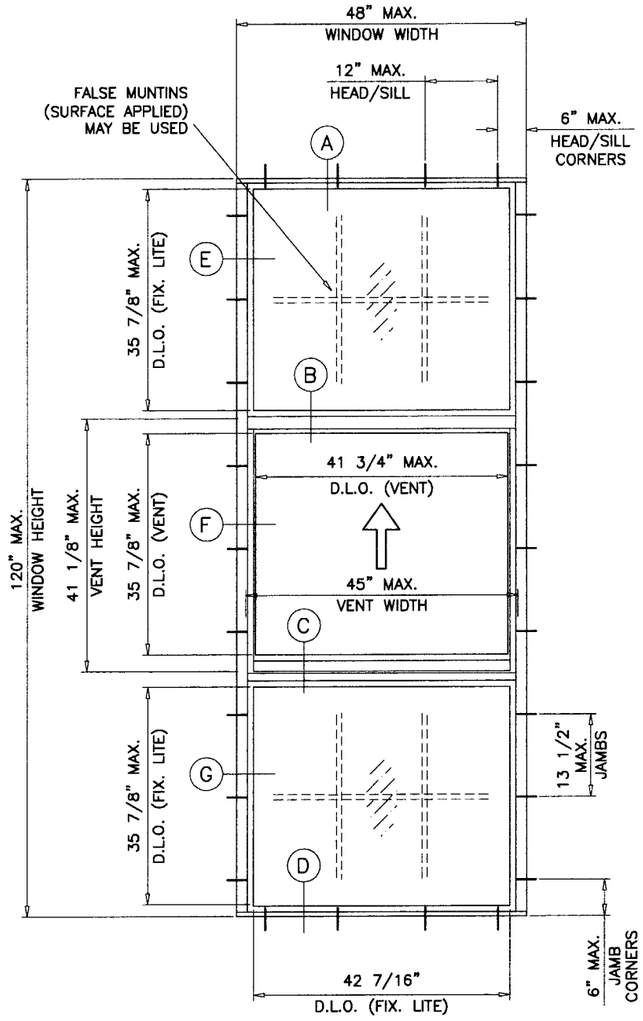

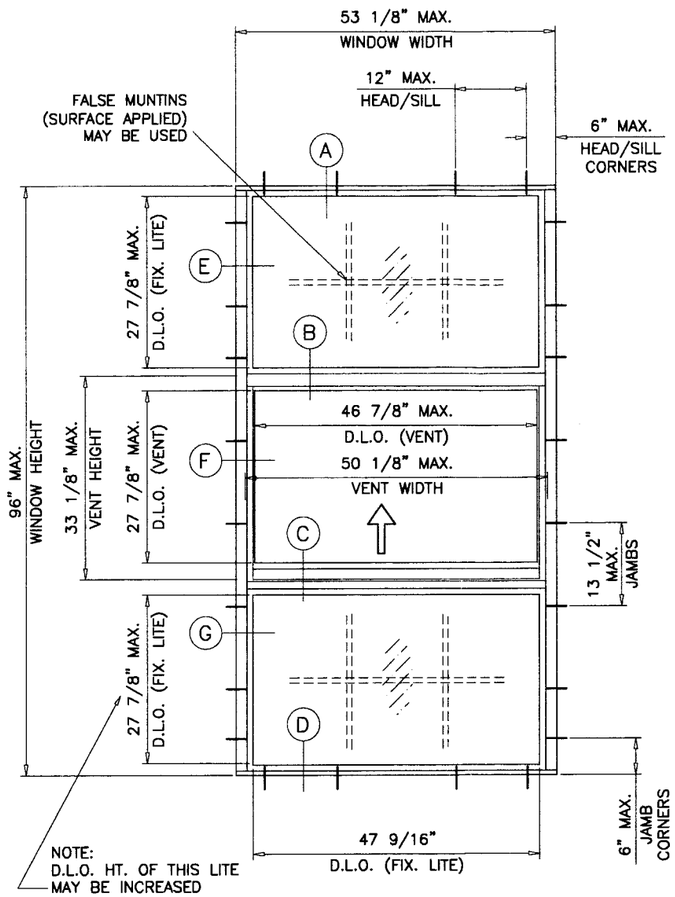

NOTE:
D.L.O. HT. OF THIS LITE
MAY BE INCREASED
UPTO 32" BY ADJUSTING
VENT & TOP FIX. LITES ABOVE

GLASS TYPE 'A'
MAXIMUM DESIGN LOAD RATING = + 75.0 PSF
(FOR SIZES SHOWN ABOVE OR SMALLER) − 75.0 PSF

GLASS TYPE 'B'
MAXIMUM DESIGN LOAD RATING = + 80.0 PSF
(FOR SIZES SHOWN ABOVE OR SMALLER) − 95.0 PSF

GLASS TYPE 'C'
MAXIMUM DESIGN LOAD RATING = + 100.0 PSF
(FOR SIZES SHOWN ABOVE OR SMALLER) − 140.0 PSF

GLASS TYPE 'A'
MAXIMUM DESIGN LOAD RATING = + 59.5 PSF
(FOR SIZES SHOWN ABOVE OR SMALLER) − 59.5 PSF

GLASS TYPE 'B'
MAXIMUM DESIGN LOAD RATING = + 63.4 PSF
(FOR SIZES SHOWN ABOVE OR SMALLER) − 75.3 PSF

GLASS TYPE 'C'
MAXIMUM DESIGN LOAD RATING = + 79.3 PSF
(FOR SIZES SHOWN ABOVE OR SMALLER) − 111.0 PSF

NOTE:
GLASS CAPACITIES ON THIS SHEET ARE
BASED ON ASTM E1300-02/04 (3 SEC. GUSTS)
AND FLORIDA BUILDING COMMISSION
DECLARATORY STATEMENT DCA05-DEC-219

Engr: DR. HUMAYOUN FAROOQ
STRUCTURES
FLA. PE # 16557
C.A.N. 3578

APR 0 9 2008

PRODUCT REVISED
as complying with the Florida
Building Code
Acceptance No 08-0422.11
Expiration Date FEB. 14, 2013
By Manuel Perez
Miami Dade Product Control
Division

AL-FAROOQ CORPORATION
ENGINEERS & PRODUCT DEVELOPMENT
1235 S.W. 87 AVE
MIAMI, FLORIDA 33174
TEL. (305) 264-8100 FAX. (305) 262-6978

COMP-ANL\W07-97IWS

S-7040/7041/7062 ALUM SINGLE HUNG WDW. (L.M.I.)

INNOVATIVE WINDOW CONCEPTS, LLC
1801 CORPORATE DRIVE
BOYNTON BEACH, FL. 33426
TEL. (561) 493-2303 FAX. (561) 493-2302

revisions:

no	date	by	description
A	03.26.08		GLAZING OPTIONS ADDED

date: 11-19-07
scale: 1/2"=1'-0"
dr. by: HAMID
chk. by:

drawing no.
W07-97

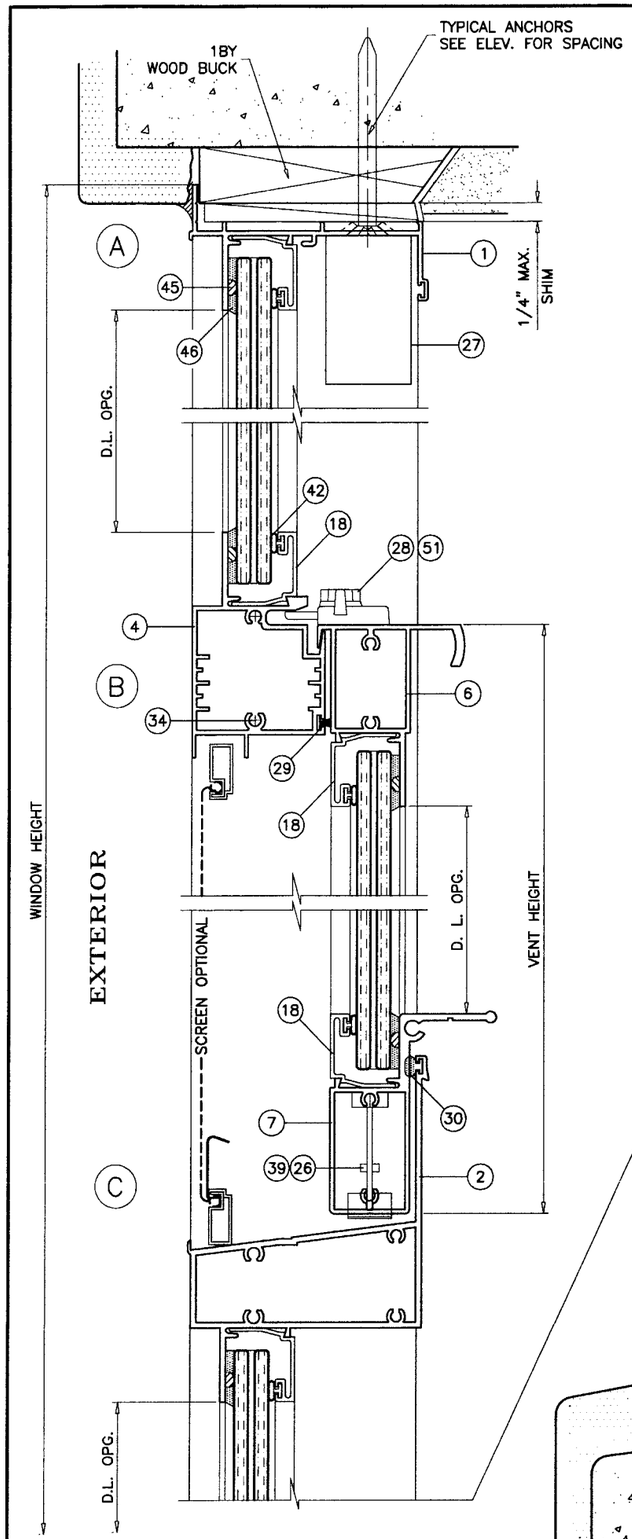

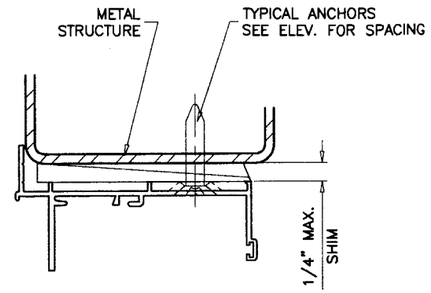

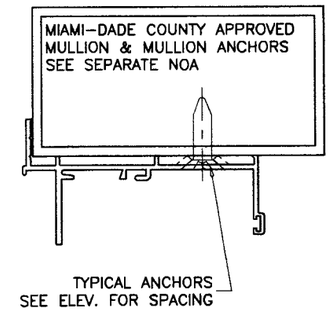

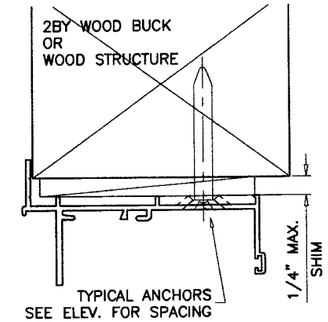

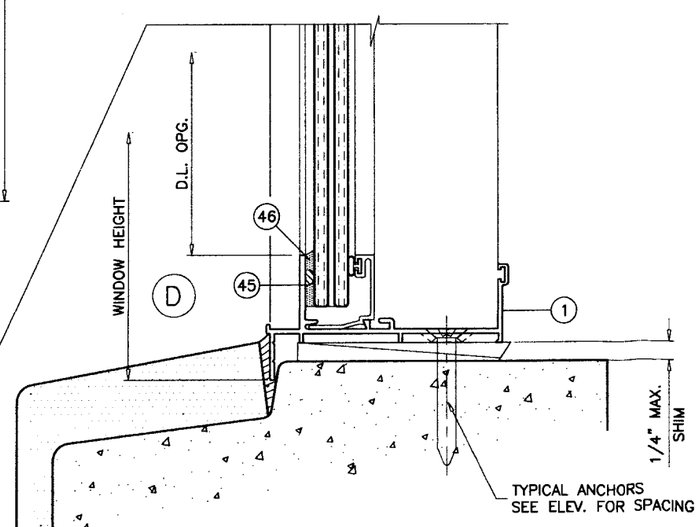

WOOD BUCKS AND METAL STRUCTURE NOT BY I.W.C. MUST SUSTAIN LOADS IMPOSED BY GLAZING SYSTEM AND TRANSFER THEM TO THE BUILDING STRUCTURE.

TYPICAL ANCHORS: SEE ELEV. FOR SPACING

1/4" TAPCONS BY 'ELCO'

INTO 2BY WOOD BUCKS OR WOOD STRUCTURES
1-3/8" MIN. PENETRATION INTO WOOD

THRU 1BY BUCKS INTO CONC. OR MASONRY
1-1/4" MIN. EMBED INTO CONC. OR MASONRY

DIRECTLY INTO CONC. OR MASONRY
1-1/4" MIN. EMBED INTO CONC. OR MASONRY

#14 SMS OR SELF DRILLING SCREWS

INTO METAL STRUCTURES

STEEL : 12 GA. MIN. (Fy = 36 KSI MIN.)
ALUMINUM : 1/8" THK. MIN. (6063-T5 MIN.)
(STEEL IN CONTACT WITH ALUMINUM TO BE PLATED OR PAINTED)

#12 SMS OR SELF DRILLING SCREWS

INTO DADE COUNTY APPROVED MULLIONS (MIN. THK. = .090")
(NO SHIM SPACE)

TYPICAL EDGE DISTANCE

INTO CONCRETE AND MASONRY = 2" MIN.
INTO WOOD STRUCTURE = 1" MIN.
INTO METAL STRUCTURE = 1/2" MIN.

SEALANT:

ALL JOINTS AND FRAME CONNECTIONS SEALED WITH SCHNEE MOREHEAD SEAM SEALER SM5504.

Engr: DR. HUMAYOUN FAROOQ
STRUCTURES
FLA. PE # 16557
C.A.N. 3538

APR 0 9 2008

PRODUCT REVISED
as complying with the Florida Building Code
Acceptance No. D8-0422.11
Expiration Date FEB. 14, 2013
By Manuel Perez
Miami-Dade Product Control Division

AL-FAROOQ CORPORATION
ENGINEERS & PRODUCT DEVELOPMENT
1235 S.W. 87 AVE
MIAMI, FLORIDA 33174
TEL. (305) 264-8100 FAX. (305) 262-6978

COMP-ANL\W07-97IWS

S-7040/7041/7062 ALUM SINGLE HUNG WDW. (L.M.I.)

INNOVATIVE WINDOW CONCEPTS, LLC
1801 CORPORATE DRIVE
BOYNTON BEACH, FL. 33426
TEL. (561) 493-2303 FAX. (561) 493-2302

revisions:

no	date	by	description
A	03.26.08		SERIES REV.

date: 11-19-07
scale: 1/2" = 1"
dr. by: HAMID
chk. by:

drawing no.
W07-97

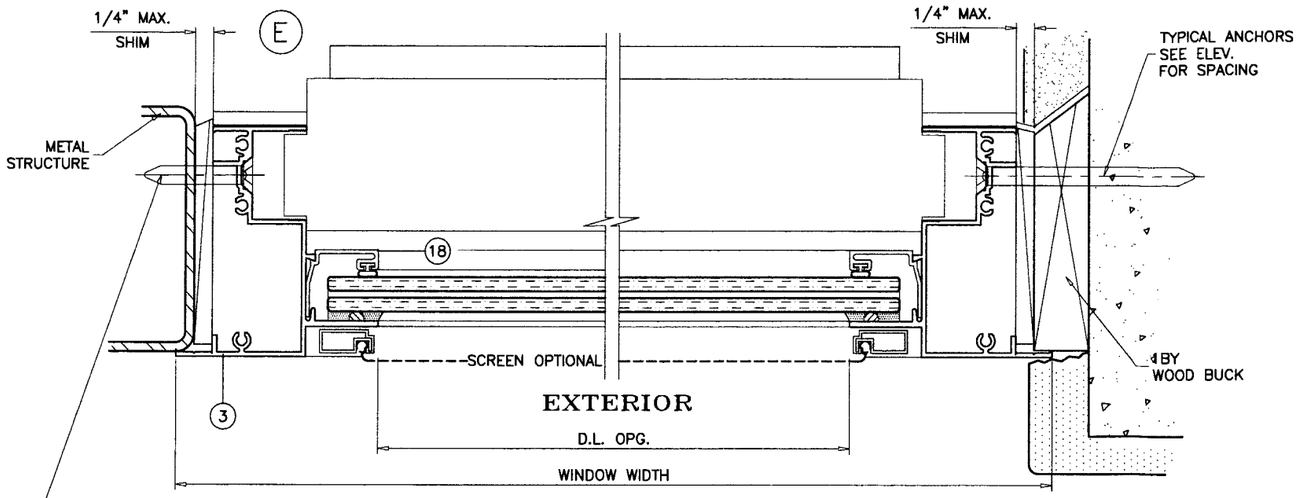

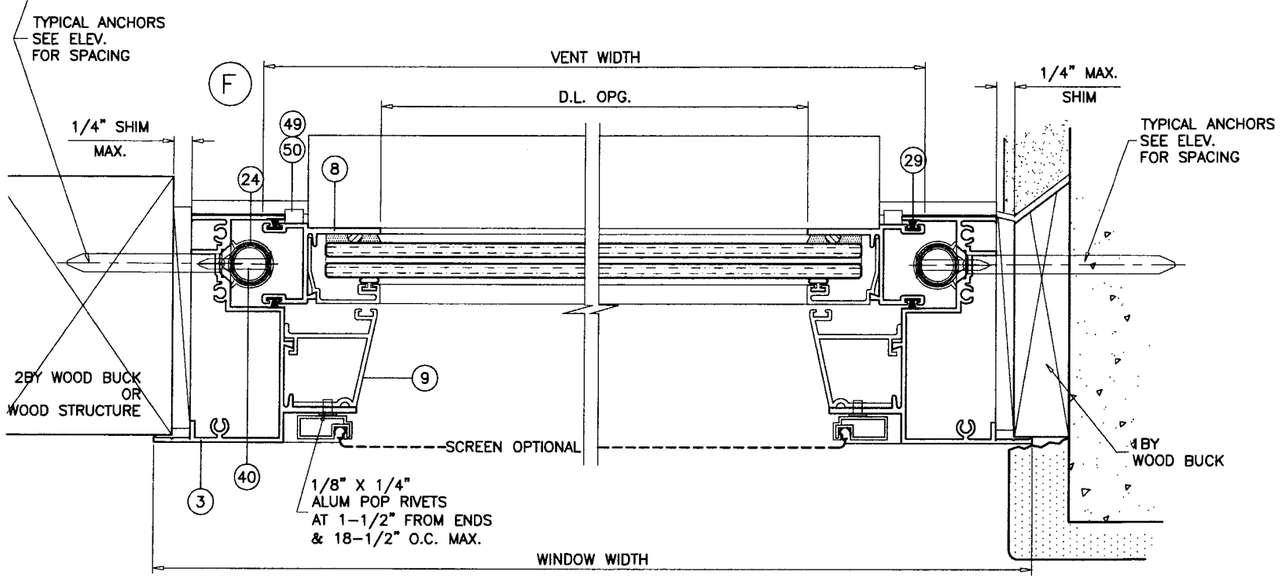

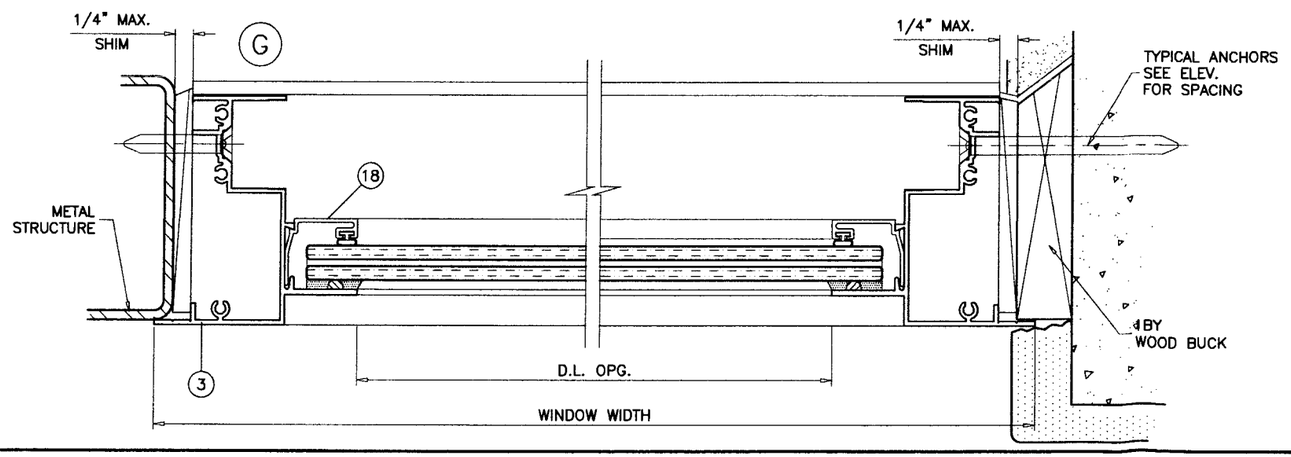

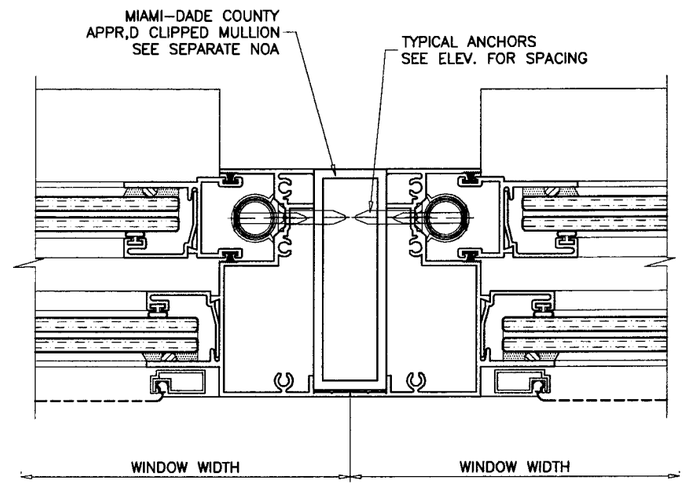

Engr: DR. HUMAYOUN FARGOO
STRUCTURES
FLA. PE # 16557
C.A.N. 3538

APR 0 9 2008

PRODUCT REVISED
as complying with the Florida Building Code
Acceptance No. 08-0422.11
Expiration Date FEB. 14, 2013
By Manuel Perez
Miami-Dade Product Control Division

AL-FAROOQ CORPORATION
ENGINEERS & PRODUCT DEVELOPMENT
1235 S.W. 87 AVE
MIAMI, FLORIDA 33174
TEL. (305) 264-8100 FAX. (305) 262-6978
COMP-ANL\W07-97IWS

S-7040/7041/7062 ALUM SINGLE HUNG WDW. (L.M.I.)

INNOVATIVE WINDOW CONCEPTS, LLC
1801 CORPORATE DRIVE
BOYNTON BEACH, FL. 33426
TEL. (561) 493-2303 FAX. (561) 493-2302

revisions:

no	date	by	description
A	03.26.08		SERIES REV.

date: 11-19-07
scale: 1/2" = 1"
dr. by: HAMID
chk. by:

drawing no.
W07-97

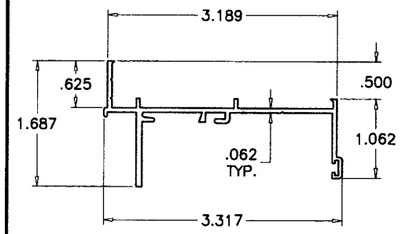

1 FRAME HEAD

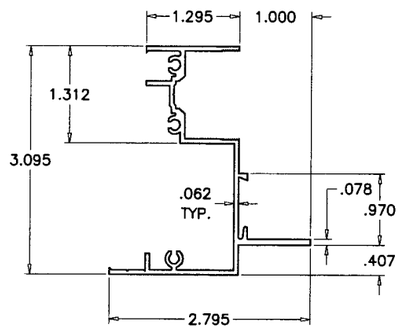

3 FRAME JAMB

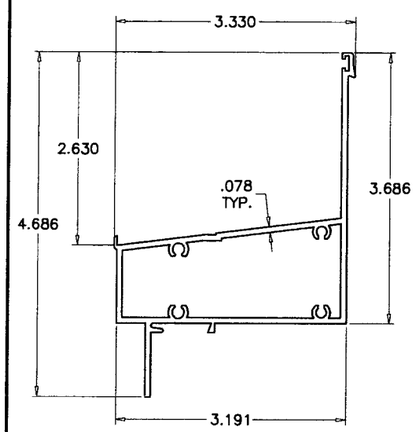

2 INTEGRAL SILL

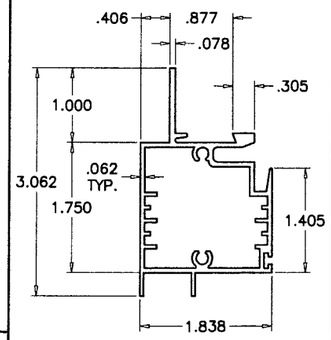

4 FIXED MEETING RAIL

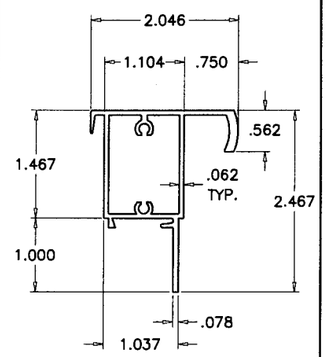

6 VENT TOP RAIL

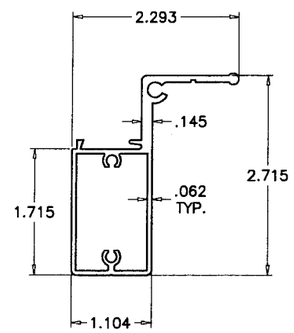

7 VENT BOTTOM RAIL

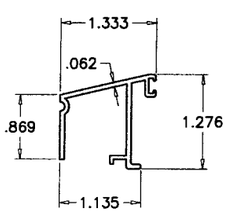

9 RETAINING CHANNEL

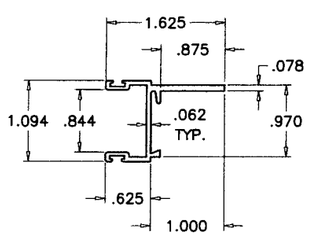

8 VENT SIDE RAIL

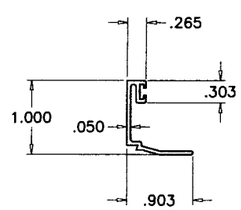

18 GLAZING BEAD

ITEM NO.	PART NO.	QUANTITY	DESCRIPTION	MATERIAL	MANF./SUPPLIER/REMARKS
1	021-006	1	FRAME HEAD	6063-T6	HAO-MEI
2	022-046	1	INTEGRAL SILL	6063-T6	HAO-MEI
3	021-005	2	FRAME JAMB	6063-T6	HAO-MEI
4	022-007	1	MTG. RAIL	6063-T5	HAO-MEI
6	022-004	1	VENT TOP RAIL	6063-T5	HAO-MEI
7	022-044	1	VENT BOTTTOM RAIL	6063-T5	HAO-MEI
8	021-003	2	VENT SIDE RAIL	6063-T5	HAO-MEI
9	021-039	AS REQD.	RETAINING CHANNEL	6063-T5	HAO-MEI
18	021-011	4/ LITE	GLAZING BEAD	6063-T5	HAO-MEI
24	025-000	2	ULTRA LIFT BALANCE		CALDWELL MFG
26	004-005	2/ WDW.	UEK BRACKET AT EACH END OF BOT. RAIL	STEEL	CALDWELL MFG
27	010-001	2/ WDW.	SASH STOP 4-1/2" LONG AT JAMBS	RIGID VINYL	MASTER TOOL
28	004-002	2/ WDW.	SWEEP LOCK @ 7" FROM ENDS	METAL	SULLIVAN & ASSOC.
29	016-001	AS REQD.	FIN SEAL	WOOL PILE	ULTRA FAB
30	023-002	AS REQD.	FILLED BULB VINYL		AMESBURY
31	016-005	2/ WDW.	FOAM (1-3/16" X 1-1/4" X 1/2") AT SILL ENDS	OPEN CELL	FRANK LOWE RUBBR
33	008-014	AS REQD.	#8X1 PHPH SMS	ST/ST	FRAME/VENT ASS'Y SCREWS
34	008-031	2/ END	#10X1 PHPH SMS	ST/ST	FIX. RAIL ASS'Y SCREWS
37	012-001	-	SEAM SEALER SM5504	ACRYLIC	SCHNEE MOREHEAD
39	008-010	2/ BRACKET	#8X1/2 UCFHPH SMS	ST/ST	UEK BRACKET SCREWS
40	008-017	-	#8X1 1/4 FHPH SMS	ST/ST	
42	015-001	AS REQD.	BULB VYNIL	VINYL	MASTER TOOL
45	015-006	-	0.150 SPACER	VINYL	FRANK LOWE RUBBR
46	012-004	-	DOW 1199	SILICONE	DOW CORNING
49	010-010	-	SASH GUIDE TOP	RIGID PVB	M & M PLASTICS
50	010-011	-	SASH GUIDE BOT	RIGID PVB	M & M PLASTICS
51	008-002	2/ LOCK	#8X3/4" FHPH SMS	ST/ST	
55	003-001	AS REQD.	ROLL FORM SCREEN FRAME	ALUMINUM	FLORIDA SCREEN

Engr: DR. HUMAYOUN FAROOQ
STRUCTURES
FLA PE # 15557
C.A.N. 3538

APR 09 2008

PRODUCT REVISED
as complying with the Florida
Building Code
Acceptance No. 08-0422.11
Expiration Date FEB. 14, 2013
By Manuel Perez
Miami-Dade Product Control
Division

AL-FAROOQ CORPORATION
ENGINEERS & PRODUCT DEVELOPMENT
1235 S.W. 87 AVE
MIAMI, FLORIDA 33174
TEL. (305) 264-8100 FAX. (305) 262-6978

COMP-ANL\W07-97IWS

S-7040/7041/7062 ALUM SINGLE HUNG WDW. (L.M.I.)

INNOVATIVE WINDOW CONCEPTS, LLC
1801 CORPORATE DRIVE
BOYNTON BEACH, FL. 33426
TEL. (561) 493-2303 FAX. (561) 493-2302

revisions:

no	date	by	description
A	03.26.08		SERIES REV.

date: 11-19-07
scale: 1/2" = 1"
dr. by: HAMID
chk. by:

drawing no.
W07-97

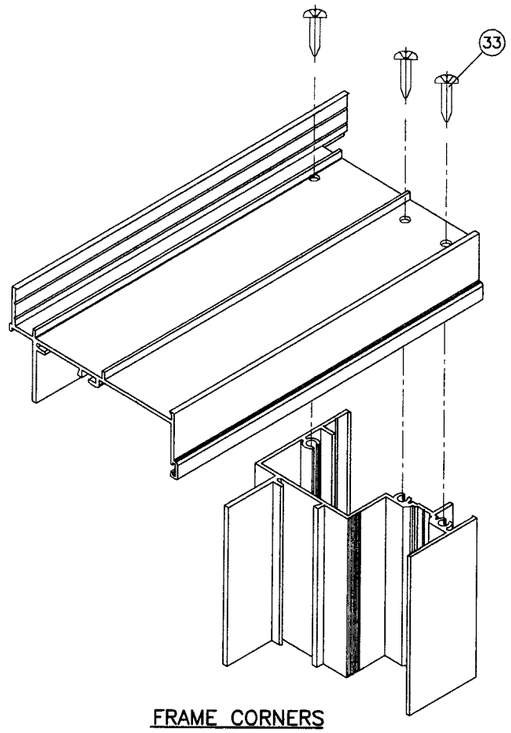

FRAME CORNERS

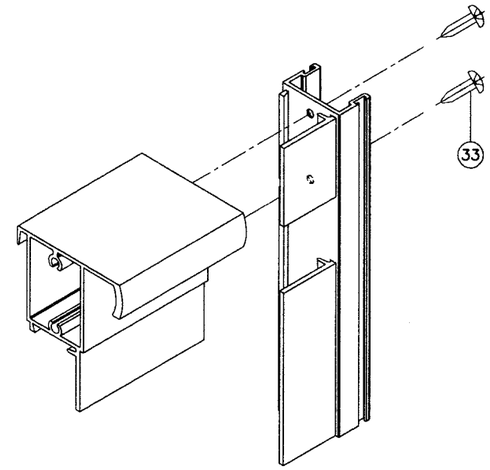

VENT TOP CORNER

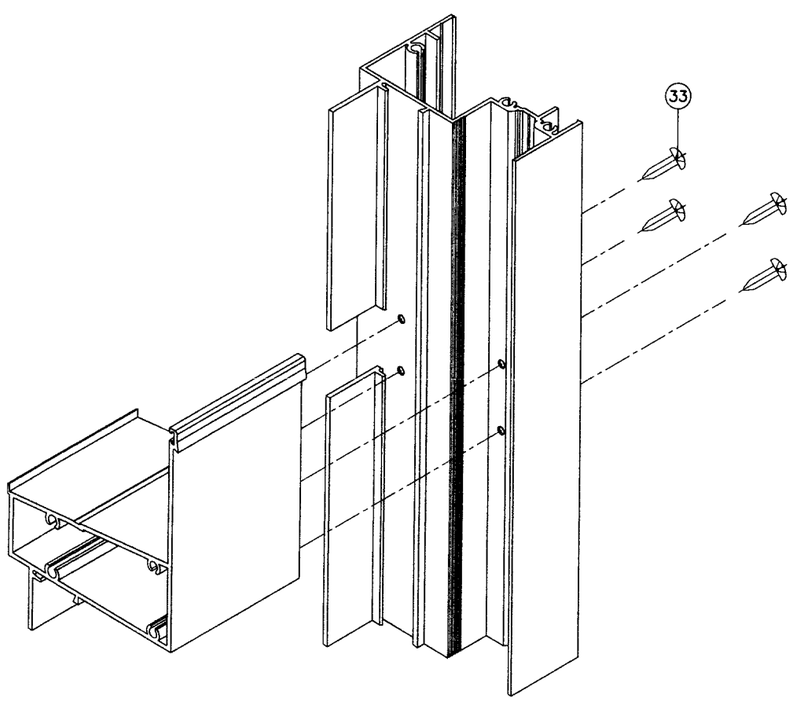

INTEGRAL SILL CORNER

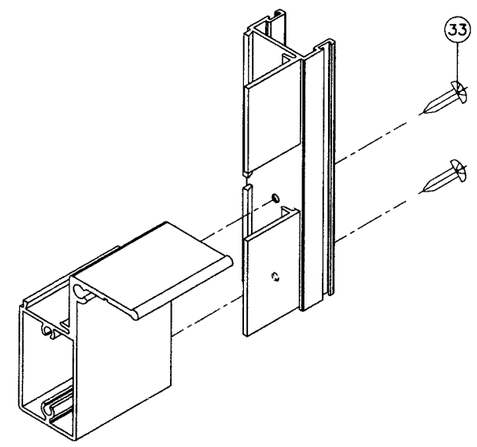

VENT BOTTOM CORNER

Engr: DR. HUMAYOUN FAROOQ
STRUCTURES
FLA. PE # 16557
C.A.N. 3538

APR 0 9 2008

PRODUCT REVISED
as complying with the Florida
Building Code
Acceptance No. 08-0422.11
Expiration Date FEB. 14, 2013
By Manuel Perez
Miami-Dade Product Control
Division

AL-FAROOQ CORPORATION
ENGINEERS & PRODUCT DEVELOPMENT
1235 S.W. 87 AVE
MIAMI, FLORIDA 33174
TEL. (305) 264-8100 FAX. (305) 262-6978
COMP-ANL\W07-97\WS

S-7040/7041/7062 ALUM. SINGLE HUNG WDW. (L.M.I.)

INNOVATIVE WINDOW CONCEPTS, LLC
1801 CORPORATE DRIVE
BOYNTON BEACH, FL. 33426
TEL. (561) 493-2303 FAX. (561) 493-2302

revisions:

no	date	by	description
A	03.26.08		SERIES REV.

date: 11-19-07
scale: 1/2" = 1"
dr. by: HAMID
chk. by:

drawing no.
W07-97

sheet 6 of 6