MIAMI-DADE COUNTY, FLORIDA
METRO-DADE FLAGLER BUILDING
140 WEST FLAGLER STREET, SUITE 1603
MIAMI, FLORIDA 33130-1563
(305) 375-2901 FAX (305) 372-6339
www.miamidade.gov/buildingcode

BUILDING CODE COMPLIANCE OFFICE (BCCO)
PRODUCT CONTROL DIVISION

NOTICE OF ACCEPTANCE (NOA)

Air Balance Incorporated
7435 Industrial Road
Florence, KY 41042

SCOPE:

This NOA is being issued under the applicable rules and regulations governing the use of construction materials. The documentation submitted has been reviewed by Miami-Dade County Product Control Division and accepted by the Board of Rules and Appeals (BORA) to be used in Miami Dade County and other areas where allowed by the Authority Having Jurisdiction (AHJ).

This NOA shall not be valid after the expiration date stated below. The Miami-Dade County Product Control Division (In Miami Dade County) and/or the AHJ (in areas other than Miami Dade County) reserve the right to have this product or material tested for quality assurance purposes. If this product or material fails to perform in the accepted manner, the manufacturer will incur the expense of such testing and the AHJ may immediately revoke, modify, or suspend the use of such product or material within their jurisdiction. BORA reserves the right to revoke this acceptance, if it is determined by Miami-Dade County Product Control Division that this product or material fails to meet the requirements of the applicable building code.

This product is approved as described herein, and has been designed to comply with the Florida Building Code, including the High Velocity Hurricane Zone.

DESCRIPTION: Model A-220 4" Aluminum Louver System

APPROVAL DOCUMENT: Drawing No. **1262**, titled "Model A-220, 4" Louver System", sheets 1 through 7 of 7, dated 11/18/03, with revision "A1", dated 04/17/08, prepared by W. W. Schaefer Engineering & Consulting, P.A., signed and sealed by Warren. W. Schaefer, P.E., bearing the Miami-Dade County Product Control Renewal stamp with the Notice of Acceptance number and expiration date by the Miami-Dade County Product Control Division.

MISSILE IMPACT RATING: Large and Small Missile Impact Resistant

LABELING: Each unit shall bear a permanent label with the manufacturer's name or logo, city, state and following statement: "Miami-Dade County Product Control Approved", unless otherwise noted herein.

RENEWAL of this NOA shall be considered after a renewal application has been filed and there has been no change in the applicable building code negatively affecting the performance of this product.

TERMINATION of this NOA will occur after the expiration date or if there has been a revision or change in the materials, use, and/or manufacture of the product or process. Misuse of this NOA as an endorsement of any product, for sales, advertising or any other purposes shall automatically terminate this NOA. Failure to comply with any section of this NOA shall be cause for termination and removal of NOA.

ADVERTISEMENT: The NOA number preceded by the words Miami-Dade County, Florida, and followed by the expiration date may be displayed in advertising literature. If any portion of the NOA is displayed, then it shall be done in its entirety.

INSPECTION: A copy of this entire NOA shall be provided to the user by the manufacturer or its distributors and shall be available for inspection at the job site at the request of the Building Official.

This NOA **renews NOA # 04-0204.02** and consists of this page 1 and evidence pages E-1 and E-2, as well as approval document mentioned above.

The submitted documentation was reviewed by **Carlos M. Utrera, P.E.**

MIAMI-DADE COUNTY APPROVED

7/2/08

NOTICE OF ACCEPTANCE: EVIDENCE SUBMITTED

A. DRAWINGS

1. Drawing No. **1262**, titled "Model A-220, 4" Louver System, sheets 1 through 7 of 7, dated 11/18/03, with revision A1" dated 04/17/08, prepared by W. W. Schaefer Engineering & Consulting, P.A. signed and sealed by Warren W. Schaefer, P.E.

B. TESTS

1. Test reports on: 1) Uniform Static Air Pressure Test, Loading per FBC TAS 202-94
   2) Large Missile Impact Test per FBC, TAS 201-94
   3) Cyclic Wind Pressure Loading per FBC, TAS 203-94

   along with marked-up drawings and installation diagram, of "A.U.I. A-220 Architectural & Non-Architectural Fixed Louver", prepared by Hurricane Test Laboratory, Inc., Report No. **0199-0518-99** and **0199-0615-99**, dated 12/06/99, signed and sealed by Vinu J. Abraham, P.E.
   "Submitted under NOA No. 04-0204.02"

C. CALCULATIONS

1. Revision calculations prepared by W.W. Schaefer Engineering & Consulting, P.A., dated 04/17/08, signed and sealed by Warren W. Schaefer, P.E.

1. Allowable Load Calculations, dated 11/10/99, pages 1 to 3 of 3, prepared by W. W. Schaefer Engineering & Consulting, P.A., signed and sealed by W. W. Schaefer. P.E.
2. Allowable Load Calculations, dated 04/14/00, pages 1 to 6 of 6, prepared by W. W. Schaefer Engineering & Consulting, P.A. signed and sealed by W. W. Schaefer. P.E.
   "Submitted under NOA No. 04-0204.02"

D. QUALITY ASSURANCE

1. Miami Dade Building Code Compliance Office (BCCO).

E. MATERIAL CERTIFICATIONS

1. Tensile Test report on 6 inch louver, prepared by Q. C. Metallurgical, Inc., No. **9LM-2586**, dated 12/27/99, signed and sealed by F. Grate P.E.
   "Submitted under NOA No. 04-0204.02"

7/2/08

Carlos M. Utrera, P.E.
Product Control Examiner
NOA No. 08-0423.04
Expiration Date: July 27, 2009
Approval Date: July 24, 2008

NOTICE OF ACCEPTANCE: EVIDENCE SUBMITTED

F. STATEMENTS

1. Code compliance letter issued by W. W. Schaefer Engineering & Consulting, P.A., dated 04/17/08, signed and sealed by Warren W. Schaefer, P.E.
2. No change letter issued by Arrow United Industries, dated 02/20/08, signed by David Willet.

1. Test compliance letter issued by Hurricane Test Laboratory, Inc. on 12/08/99, signed and sealed by V. J. Abraham, P.E.
2. No financial interest letter issued by 11/15/99, signed and sealed by W. W. Schaefer, P.E.

"Submitted under NOA No. 04-0204.02"

G. OTHER

1. Notice of Acceptance No. **04-0204.02**, issued to Air Balance Incorporated, approved on 04/22/04 and expiring on 07/27/08.

7/2/08

Carlos M. Utrera, P.E.
Product Control Examiner
NOA No. 08-0423.04
Expiration Date: July 27, 2009
Approval Date: July 24, 2008

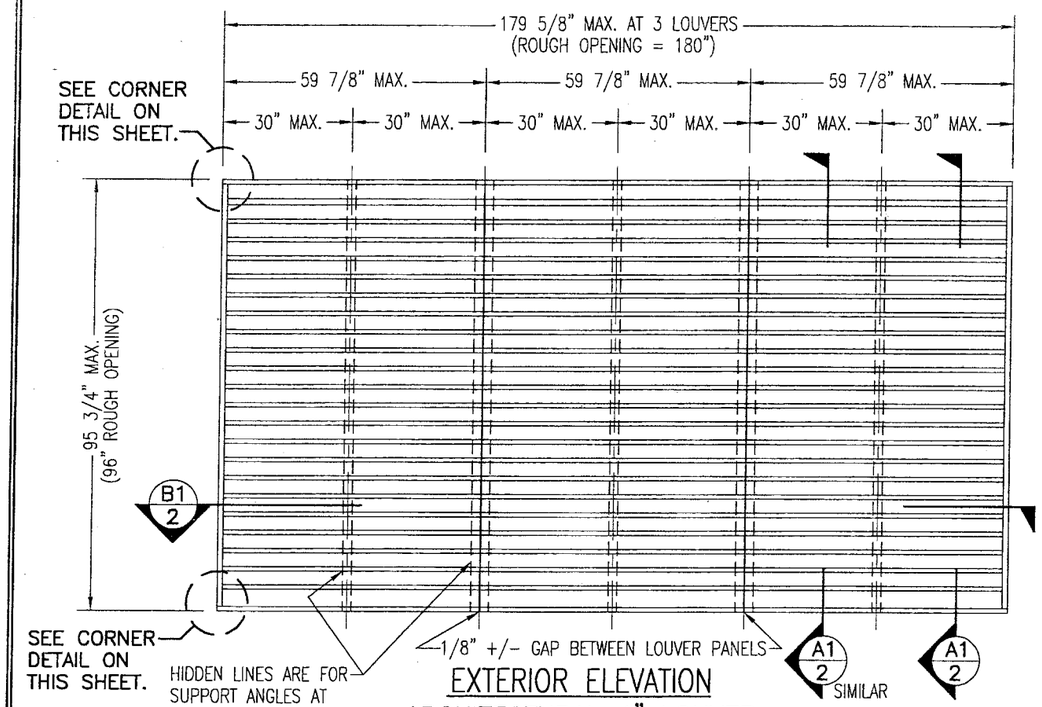

EXTERIOR ELEVATION
ARCHITECTURAL 4" LOUVER

SCALE: 3/8"=1'-0"

NOTE: THIS LOUVER SYSTEM MAY CONSIST OF AN UNLIMITED NUMBER OF SECTIONS PROVIDING EACH SECTION DOES NOT EXCEED 59 7/8" X 95 3/4" IN SIZE.

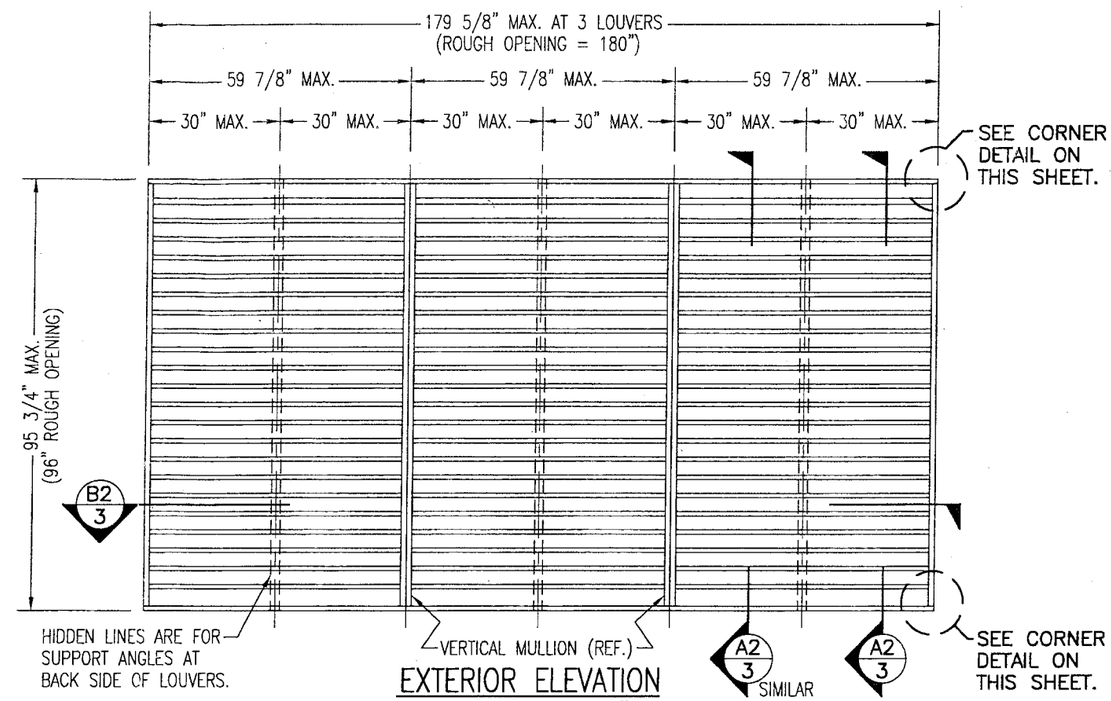

EXTERIOR ELEVATION
NON-ARCHITECTURAL 4" LOUVER

SCALE: 3/8"=1'-0"

NOTE: THIS LOUVER SYSTEM MAY CONSIST OF AN UNLIMITED NUMBER OF SECTIONS PROVIDING EACH SECTION DOES NOT EXCEED 59 7/8" X 95 3/4" IN SIZE.

GENERAL NOTES:

1. THESE LOUVER SYSTEMS HAVE BEEN TESTED, ANALYZED & APPROVED FOR DESIGN PRESSURES NOT TO EXCEED THOSE SHOWN IN THE "ALLOWABLE DESIGN PRESSURE TABLE(S).
2. OPENINGS MUST BE PROPERLY DESIGNED & CONSTRUCTED TO TRANSFER WIND LOADS TO THE STRUCTURE.
3. ALL HARDWARE & FASTENERS SHALL BE IN ACCORDANCE WITH THESE DRAWINGS & SHALL NOT VARY UNLESS SPECIFICALLY MENTIONED ON THE DRAWINGS. SPECIFIED ANCHOR EMBED TO BASE MATERIAL SHALL BE BEYOND WALL FINISH OR STUCCO.
4. THE DETAILS & SPECIFICATIONS SHOWN HEREIN REPRESENT THE PRODUCTS TESTED & PROPOSED FOR IMPACT, CYCLIC & UNIFORM STATIC AIR PRESSURE TESTING IN CONFORMANCE WITH THE FLORIDA BUILDING CODE PROTOCALS TAS-201, 202 & 203 FOR LARGE MISSILE IMPACT LOUVERS.
5. THESE LOUVER SYSTEMS HAVE BEEN DESIGNED IN ACCORDANCE WITH AND MEET THE REQUIREMENTS OF THE FLORIDA BUILDING CODE (FBC) INCLUDING HIGH VELOCITY HURRICANE ZONES (HVHZ).
6. ALL ANCHORS SECURING LOUVER FRAME TO PRESSURE TREATED BUCKS OR WOOD FRAMING SHALL BE CAPABLE OF RESISTING CORROSION CAUSED BY THE PRESSURE TREATING CHEMICALS IN THE WOOD.
7. DETERMINE THE POSITIVE & NEGATIVE DESIGN LOADS TO USE WHEN REFERENCING THESE DOCUMENTS IN ACCORDANCE WITH THE GOVERNING CODE AND GOVERNING WIND VELOCITY. FOR WIND LOAD CALCULATIONS IN ACCORDANCE WITH THE FLORIDA BUILDING CODE, A DIRECTIONALITY FACTOR OF Kd = 0.85 MAY BE APPLIED WHEN USED IN CONJUNCTION WITH LOAD COMBINATIONS SPECIFIED IN SECTION 2.0 OF THE ASCE 7 STANDARD.
8. NO INCREASE IN ALLOWABLE STRESS HAS BEEN USED IN THE CERTIFICATION OF THIS PRODUCT. WIND LOAD DURATION FACTOR Cd = 1.6 WAS USED FOR WOOD SCREW ANALYSIS ONLY.
9. MATERIALS, INCLUDING BUT NOT LIMITED TO STEEL SCREWS, THAT COME INTO CONTACT WITH OTHER DISSIMILAR MATERIALS SHALL MEET THE REQUIREMENTS OF FLORIDA BUILDING CODE CHAPTER 20.
10. MAXIMUM ALLOWABLE INDIVIDUAL PANEL SIZE = 59 7/8" X 95 3/4".
11. MAXIMUM ASSEMBLY SIZE = UNLIMITED WIDTH; UP TO 95 3/4" HEIGHT.
12. ASSEMBLIES/SECTIONS MAY BE STACKED VERTICALLY PROVIDING A STRUCTURAL SUPPORT IS DESIGNED & INSTALLED BY OTHERS TO SUPPORT ALL LOADS TRANSFERED FROM THE LOUVER ASSEMBLY.
13. MAXIMUM UNSUPPORTED BLADE LENGTH SHALL NOT EXCEED 30"
14. ALL FASTENERS SHALL BE PLATED STEEL OR 304 STAINLESS STEEL.
15. SPECIFIED SUBSTRATES REQUIREMENTS:
    CONCRETE: MIN. 3000 PSI
    MASONRY: MIN. C90 CMU
    WOOD: MIN. GRADE 2; G = 0.55
    STEEL: MIN. 1/8" THICK A36 (36 KSI)
16. THIS SYSTEM HAS NOT BEEN TESTED FOR WATER INFILTRATION RESISTANCE & IS NOT A WATER RESISTANT SYSTEM.

MAX. ALLOWABLE DESIGN WIND PRESSURE	
POSITIVE	NEGATIVE
150 PSF	150 PSF
NOTE: SEE LOAD TABLE ON SHEET 7 FOR VARIATIONS OF PRESSURES WITH RESPECT TO PANEL WIDTH & CLIP SPACING.	

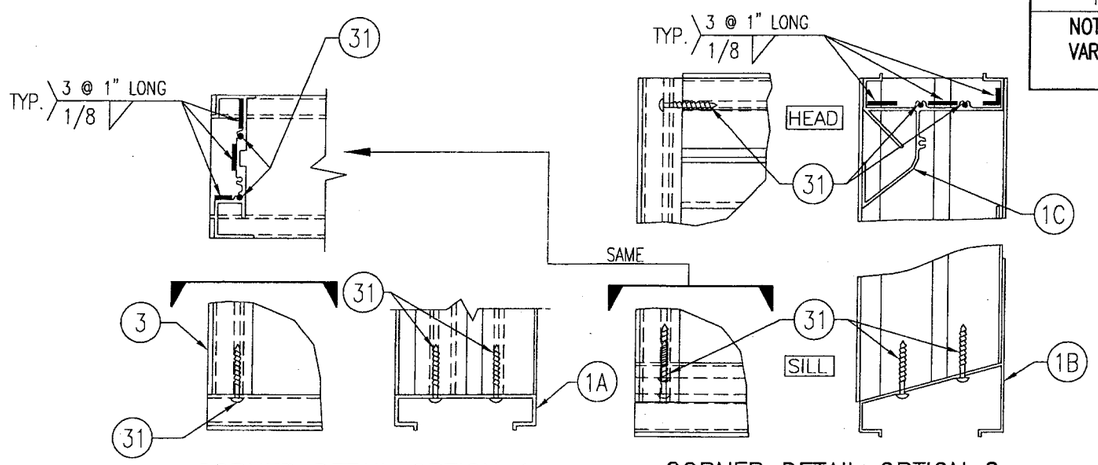

CORNER DETAIL OPTION 1
(SILL CORNER SHOWN; HEAD IS MIRRORED IMAGE)

CORNER DETAIL OPTION 2

PRODUCT RENEWED
as complying with the Florida Building Code
Acceptance No. 08-0427.04
Expiration Date 07/27/2009
By
Miami Dade Product Control Division

DRAWN BY: K.P.S.	CHECKED BY: W.W.S.
PLOT: 1=32	DATE: 11/18/03

NO.	REVISION DESCRIPTION	BY	DATE
A1	UPDATE FOR CODE COMPLIANCE	W.R.M.	04/17/08

DRAWING TITLE
MODEL A220 4" LOUVER SYSTEM

MANUFACTURER
AIR BALANCE INC.
120 SOUTH PLIN STREET
BRADNER, OH 43406
419-865-0000

CONSULTANTS
W. W. SCHAEFER ENGINEERING & CONSULTING, P.A.
8895 N. MILITARY TRAIL, SUITE C-204
PALM BEACH GARDENS, FL 33410
PHONE: 561-775-4902 FAX: 561-775-4903

CERTIFICATION
APR 18 2008
WARREN W. SCHAEFER, P.E.
P.E. NO. 44135

DRAWING NO. 1262
REV. A
SHEET NO. 1 OF 7

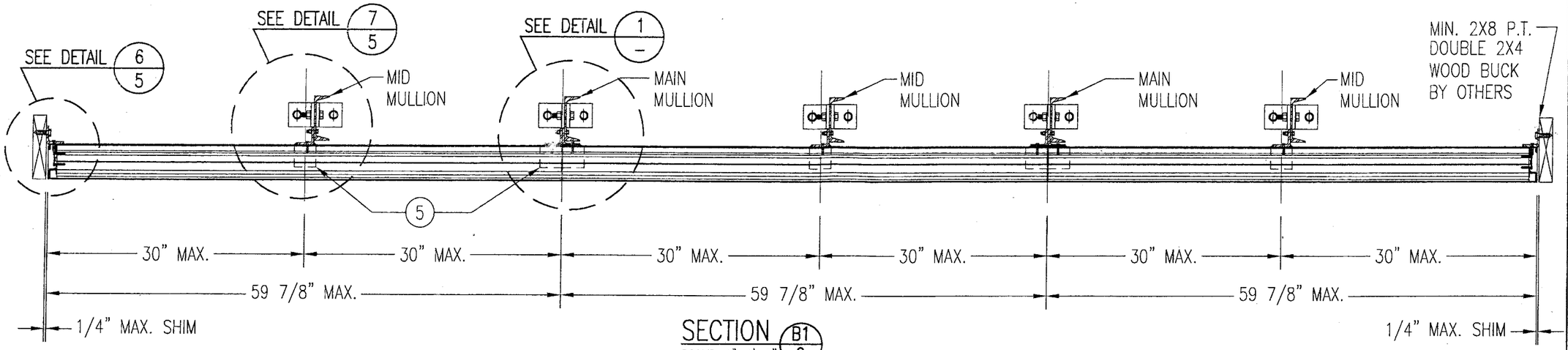

SECTION B1/2
SCALE: 1"=1'-0"
ARCHITECTURAL LOUVER

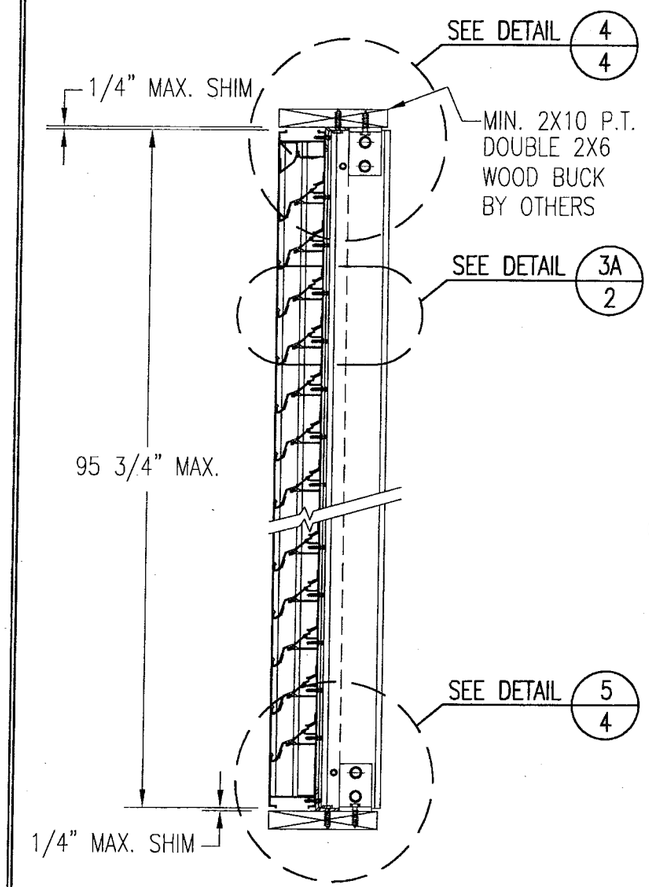

SECTION A1/2
SCALE: 1"=1'-0"
ARCHITECTURAL LOUVER

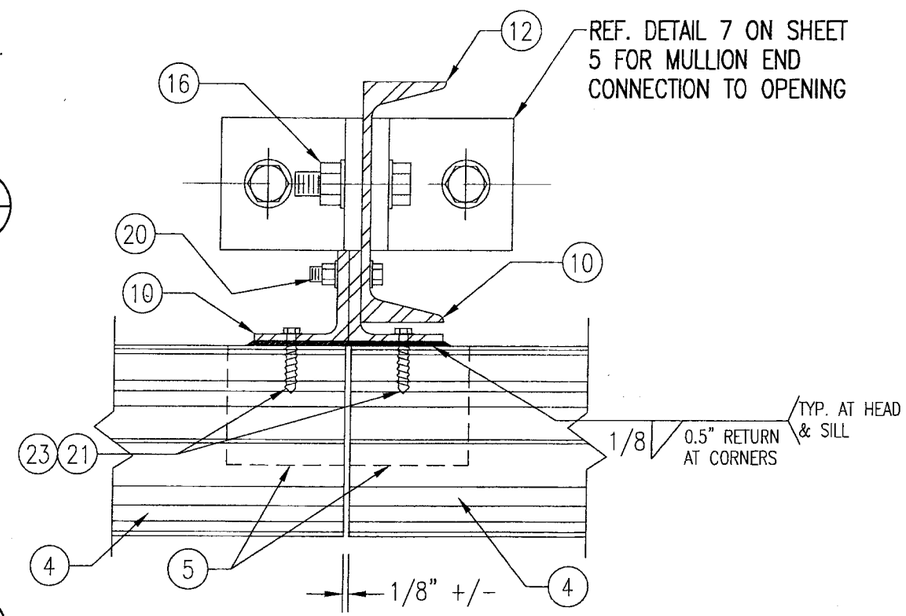

DETAIL 1/–
SCALE: 1/3 FULL
ARCHITECTURAL LOUVER

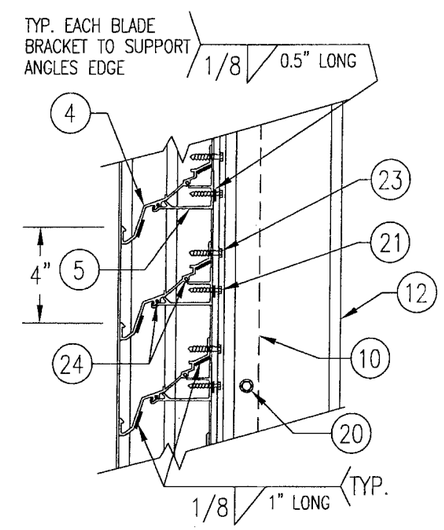

DETAIL 3A/2
SCALE: 2"=1'-0"
TYP. AT ALL MULLIONS THIS SHEET

PRODUCT RENEWED
as complying with the Florida Building Code
Acceptance No. 03-0423.04
Expiration Date 07/27/2009
By
Miami/Dade Product Control Division

DRAWN BY: K.P.S.	CHECKED BY: W.W.S.
PLOT: 1=12	DATE: 11/18/03

NO.	REVISION DESCRIPTION	BY	DATE

DRAWING TITLE: MODEL A220 4" LOUVER SYSTEM

MANUFACTURER: AIR BALANCE INC.
120 SOUTH PLIN STREET
BRADNER, OH 43406
419-865-0000

CONSULTANTS: W. W. SCHAEFER ENGINEERING & CONSULTING, P.A.
8895 N. MILITARY TRAIL; SUITE C-204
PALM BEACH GARDENS, FL 33410
PHONE: 561-775-4902 FAX: 561-775-4903

CERTIFICATION
APR 18 2008
WARREN W. SCHAEFER, P.E.
P.E. NO. 44135

DRAWING NO. 1262
REV. A
SHEET NO. 2 OF 7

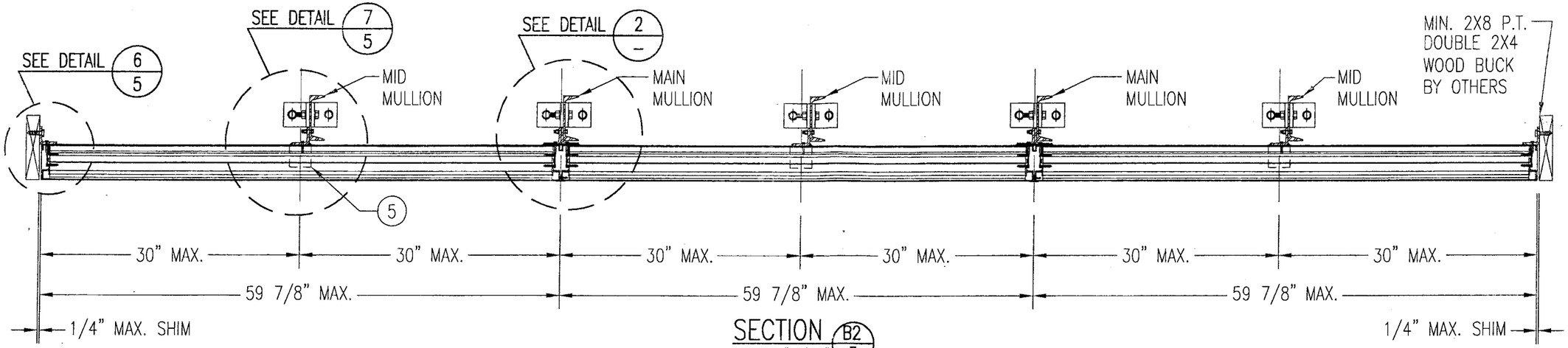

SECTION B2/3
SCALE: 1"=1'-0"
NON-ARCHITECTURAL LOUVER

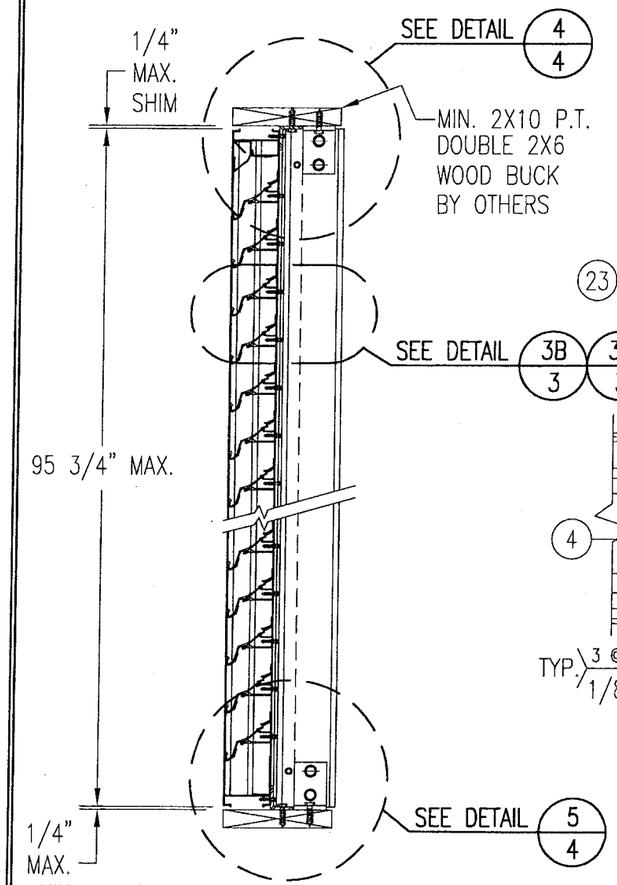

SECTION A2/3
SCALE: 1"=1'-0"
NON-ARCHITECTURAL LOUVER

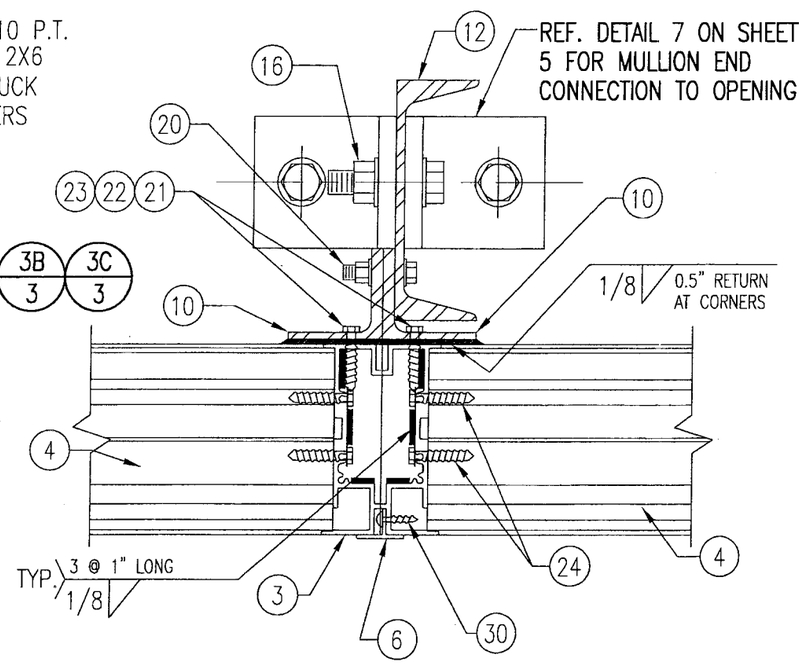

DETAIL 2/–
SCALE: 2"=1'-0"
NON-ARCHITECTURAL LOUVER

NOTE: SIDE JAMBS ARE ADDITIONALLY FASTENED TO THE SILL & HEAD WITH 2 NO. 7 X 1" SMS THROUGH SILL & INTO JAMB SPLINES.

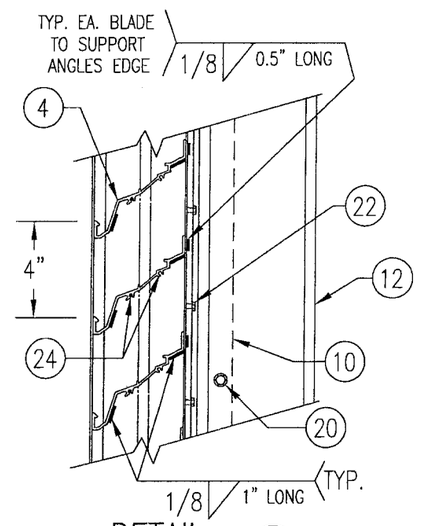

DETAIL 3B/3
SCALE: 2"=1'-0"
TYP. AT ALL MID-SPAN MULLIONS THIS SHEET

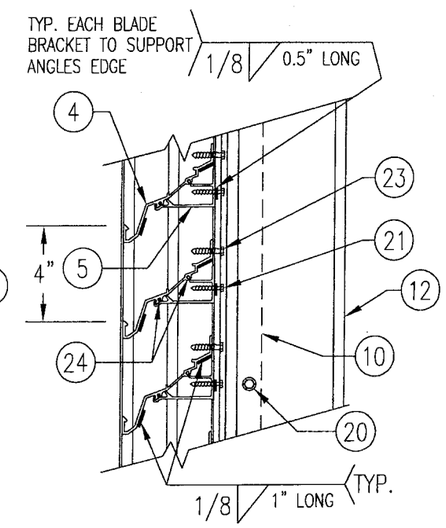

DETAIL 3C/3
SCALE: 2"=1'-0"
TYP. AT ALL MID-SPAN MULLIONS THIS SHEET

PRODUCT RENEWED
as complying with the Florida Building Code
Acceptance No 08-0423.04
Expiration Date 07/27/2009
By _____
Miami Dade Product Control Division

NO.	REVISION DESCRIPTION	BY	DATE

DRAWN BY: K.P.S. | CHECKED BY: W.W.S.
PLOT: 1=12 | DATE: 11/18/03

DRAWING TITLE: MODEL A220 4" LOUVER SYSTEM

MANUFACTURER: AIR BALANCE INC.
120 SOUTH PLIN STREET
BRADNER, OH 43406
419-865-0000

CONSULTANTS: W. W. SCHAEFER ENGINEERING & CONSULTING, P.A.
8895 N. MILITARY TRAIL; SUITE C-204
PALM BEACH GARDENS, FL 33410
PHONE: 561-775-4902 FAX: 561-775-4903

CERTIFICATION: APR 18 2008
WARREN W. SCHAEFER, P.E.
P.E. NO. 44135

DRAWING NO. 1262 | REV. A
SHEET NO. 3 OF 7

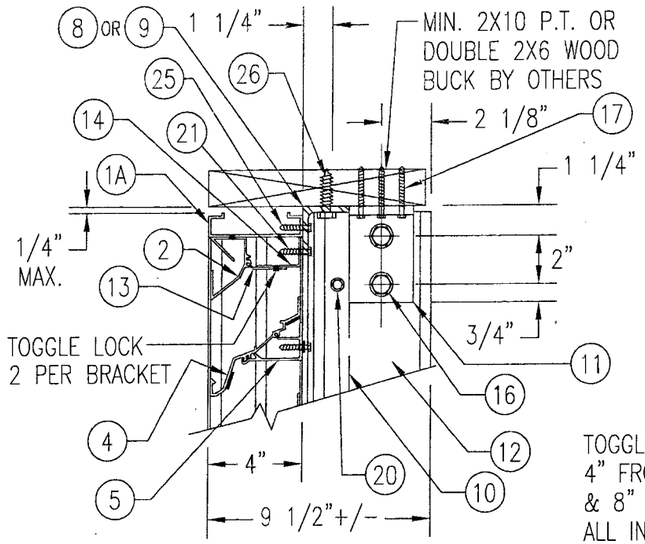

WOOD FRAMED OPENING

SEE "DETAIL 3A & 3B" FOR LOUVER BLADE DETAILS
NOTE: STANDARD HEADER (ITEMS #1A & 2) IS SHOWN IN THIS VIEW. 1-PIECE HEADER (ITEM 1C) ALSO APPLIES.

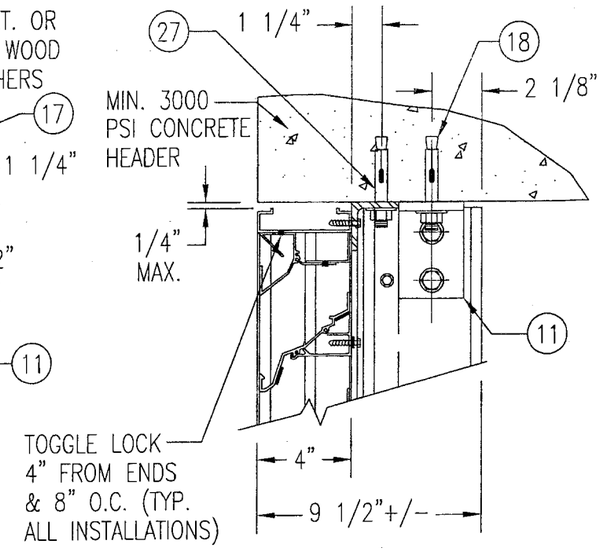

CONCRETE HEAD

SEE "WOOD OPENING" FOR DETAIL NOT SHOWN
(MASONRY ACCEPTABLE AT SIDES ONLY AND MAY NOT BE USED AT HEAD OR SILL)

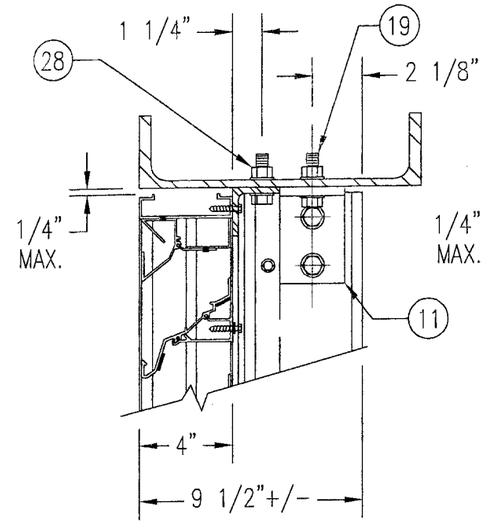

STEEL FRAME OPENING (BOLTED)

SEE "WOOD OPENING" FOR DETAIL NOT SHOWN

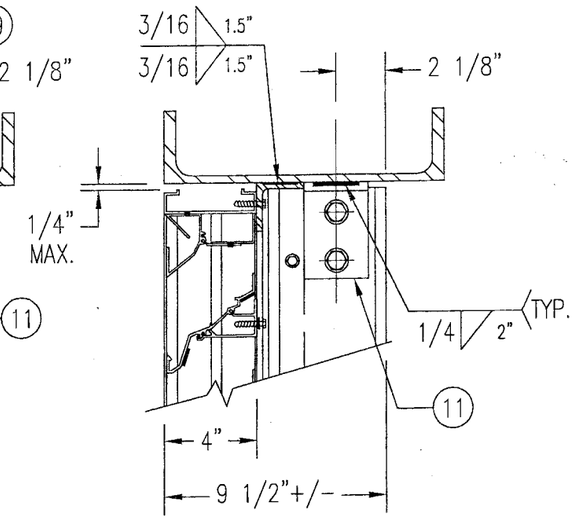

STEEL FRAME OPENING (WELDED)

SEE "WOOD OPENING" FOR DETAIL NOT SHOWN

DETAIL 4/4
SCALE: 2"=1'-0"

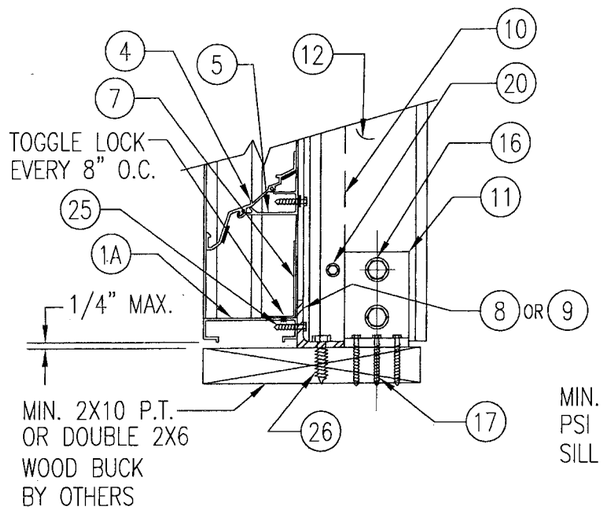

WOOD FRAMED OPENING

SEE "DETAIL 3A & 3B" FOR LOUVER BLADE DETAILS
NOTE: STANDARD SILL (ITEM #1A) IS SHOWN IN THIS VIEW. SLOPED SILL (ITEM 1B) ALSO APPLIES.

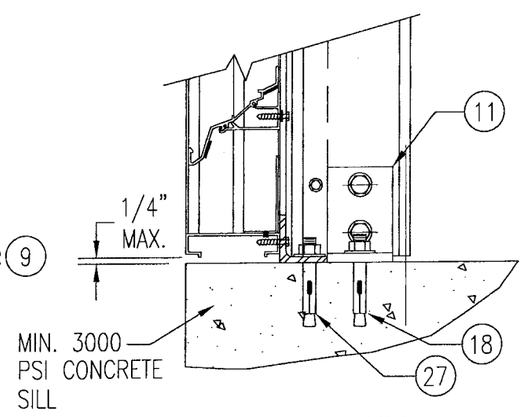

CONCRETE SILL

SEE "WOOD OPENING" FOR DETAIL NOT SHOWN
(MASONRY ACCEPTABLE AT SIDES ONLY AND MAY NOT BE USED AT HEAD OR SILL)

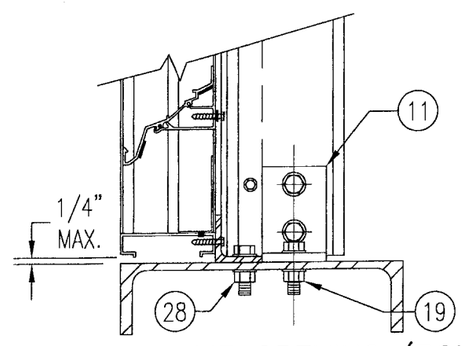

STEEL FRAME OPENING (BOLTED)

SEE "WOOD OPENING" FOR DETAIL NOT SHOWN

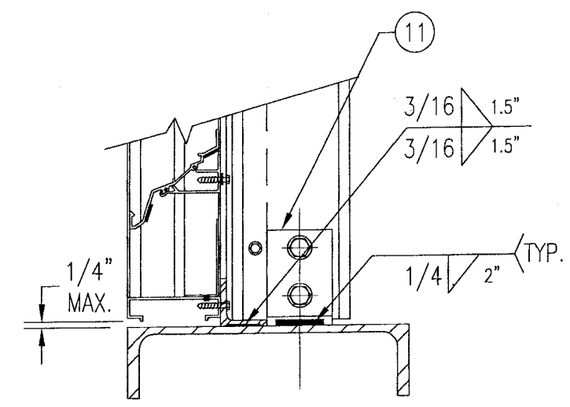

STEEL FRAME OPENING (WELDED)

SEE "WOOD OPENING" FOR DETAIL NOT SHOWN

DETAIL 5/4
SCALE: 2"=1'-0"

MASONRY MAY ONLY BE USED AT SIDES OF LOUVER PANELS & MAY NOT BE USED AT THE HEAD OR SILL.

PRODUCT RENEWED
as complying with the Florida Building Code
Acceptance No. 08-0423.04
Expiration Date 07/27/2009
By _____
Miami Dade Product Control Division

DRAWN BY: K.P.S.	CHECKED BY: W.W.S.
PLOT: 1=6	DATE: 11/18/03

NO.	REVISION DESCRIPTION	BY	DATE

DRAWING TITLE
MODEL A220 4" LOUVER SYSTEM

MANUFACTURER
AIR BALANCE INC.
120 SOUTH PLIN STREET
BRADNER, OH 43406
419-865-0000

CONSULTANTS
W. W. SCHAEFER ENGINEERING & CONSULTING, P.A.
8895 N. MILITARY TRAIL, SUITE C-204
PALM BEACH GARDENS, FL 33410
PHONE: 561-775-4902 FAX: 561-775-4903

CERTIFICATION
APR 18 2008
WARREN W. SCHAEFER, P.E.
P.E. NO. 44135

DRAWING NO. 1262
REV. A
SHEET NO. 4 OF 7

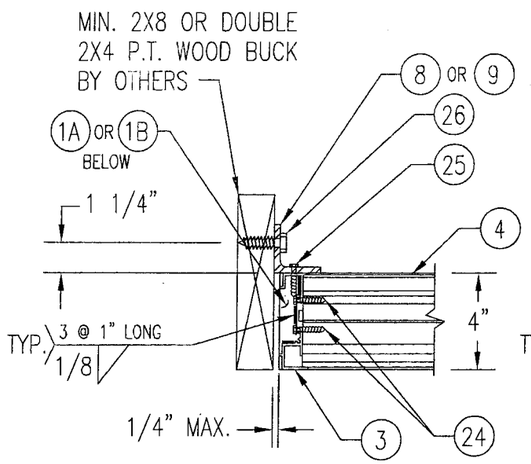

WOOD FRAMED OPENING

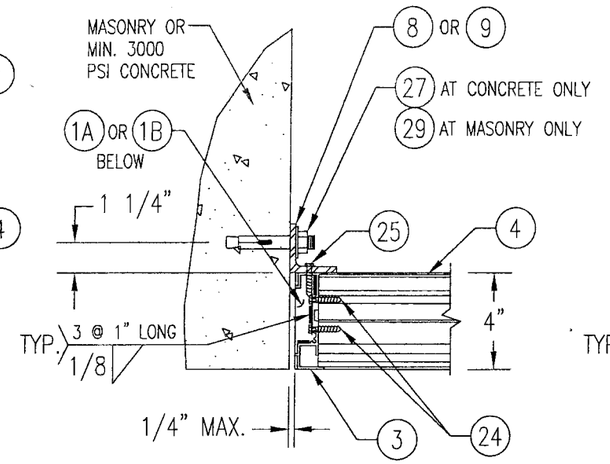

CONCRETE/MASONRY OPENING

(MASONRY ACCEPTABLE AT SIDES ONLY AND MAY NOT BE USED AT HEAD OR SILL)

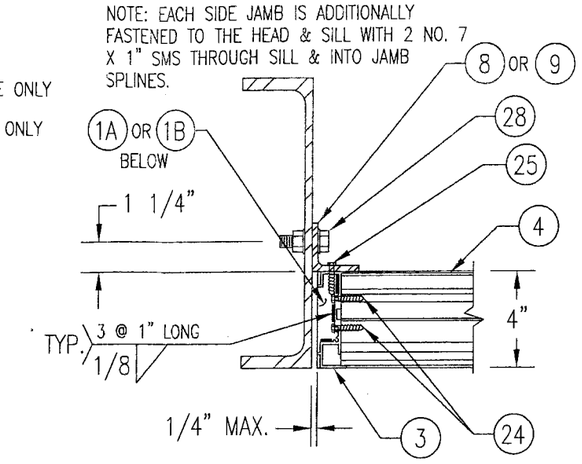

STEEL FRAME OPENING (BOLTED)

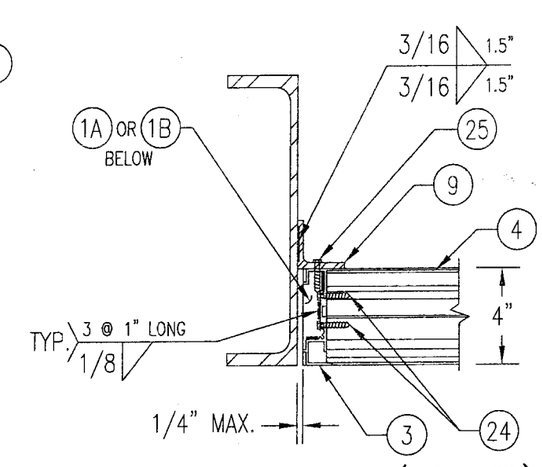

STEEL FRAME OPENING (WELDED)

DETAIL 6/5

SCALE: 2"=1'-0"

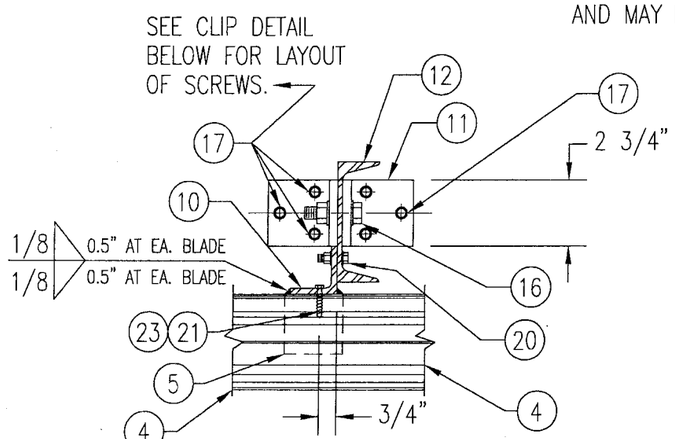

WOOD FRAMED OPENING

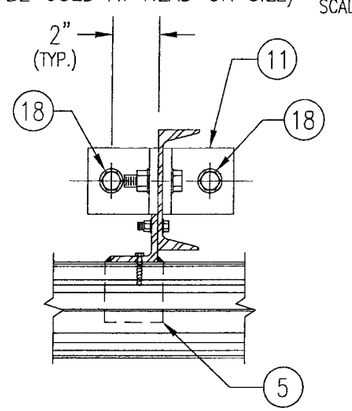

CONCRETE SILL & HEAD

SEE "WOOD OPENING" FOR DETAIL NOT SHOWN (MASONRY ACCEPTABLE AT SIDES ONLY AND MAY NOT BE USED AT HEAD OR SILL)

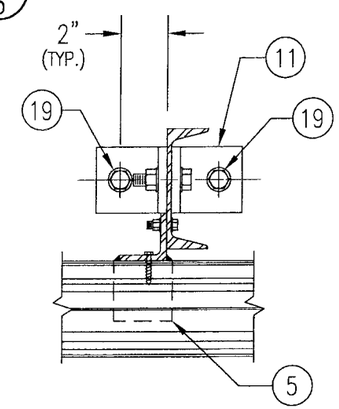

STEEL FRAME OPENING (BOLTED)

SEE "WOOD OPENING" FOR DETAIL NOT SHOWN

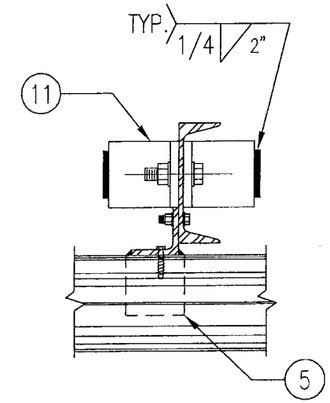

STEEL FRAME OPENING (WELDED)

SEE "WOOD OPENING" FOR DETAIL NOT SHOWN

DETAIL 7/5

SCALE: 2"=1'-0"

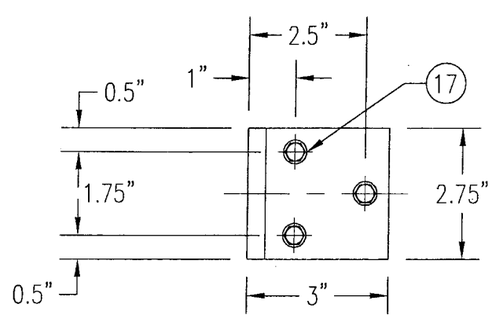

MULLION CLIP DETAIL @ WOOD INSTALLATION

MASONRY MAY ONLY BE USED AT SIDES OF LOUVER PANELS & MAY NOT BE USED AT THE HEAD OR SILL.

PRODUCT RENEWED
as complying with the Florida Building Code
Acceptance No. 08-0423.04
Expiration Date 07/27/2009
By _____
Miami Dade Product Control Division

DRAWN BY: K.P.S.	CHECKED BY: W.W.S.
PLOT: 1=6	DATE: 11/18/03

NO.	REVISION DESCRIPTION	BY	DATE

DRAWING TITLE: MODEL A220 4" LOUVER SYSTEM

MANUFACTURER: AIR BALANCE INC.
120 SOUTH PLIN STREET
BRADNER, OH 43406
419-865-0000

CONSULTANTS: W. W. SCHAEFER ENGINEERING & CONSULTING, P.A.
8895 N. MILITARY TRAIL; SUITE C-204
PALM BEACH GARDENS, FL 33410
PHONE: 561-775-4902 FAX: 561-775-4903

CERTIFICATION: APR 18 2008
WARREN W. SCHAEFER, P.E.
P.E. NO. 44135

DRAWING NO.	REV.
1262	A

SHEET NO. 5 OF 7

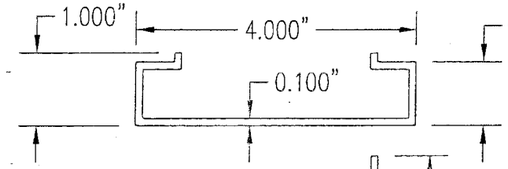

1A STANDARD HEADER & SILL JAMB
6063-T5 ALUMINUM
SCALE: 1/2 FULL

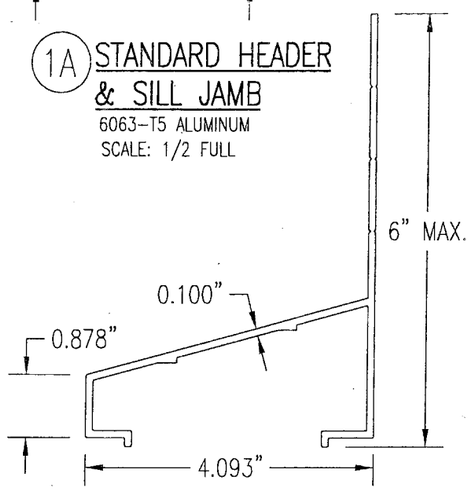

1B OPTIONAL SLOPED SILL
6063-T5 ALUMINUM
SCALE: 1/2 FULL

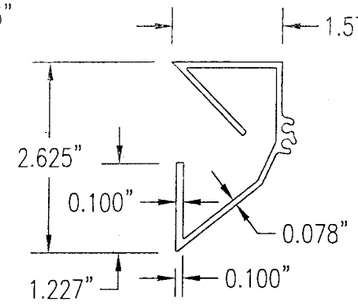

2 PARTIAL BLADE
6063-T5 ALUMINUM
SCALE: 1/2 FULL

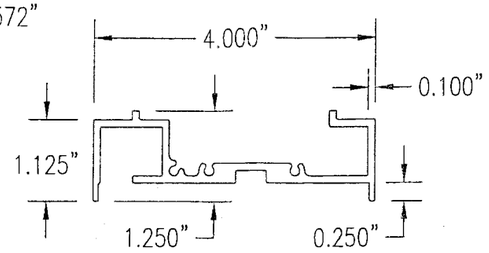

3 SIDE JAMB
6063-T5 ALUMINUM
SCALE: 1/2 FULL

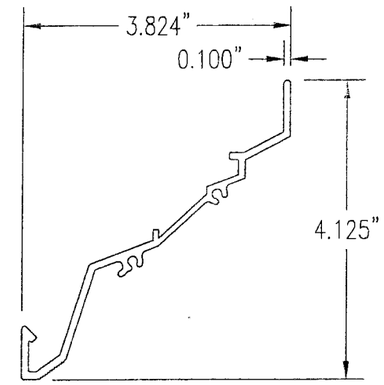

4 LOUVER BLADE
6063-T5 ALUMINUM
SCALE: 1/2 FULL

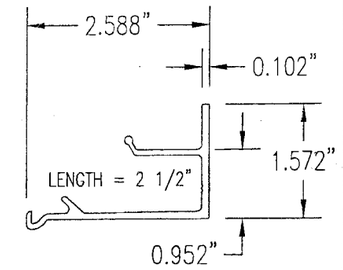

5 BLADE BRACE
6063-T5 ALUMINUM
SCALE: 1/2 FULL

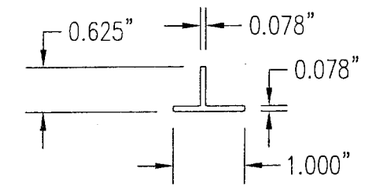

6 MULLION CAP
6063-T5 ALUMINUM
SCALE: 1/2 FULL

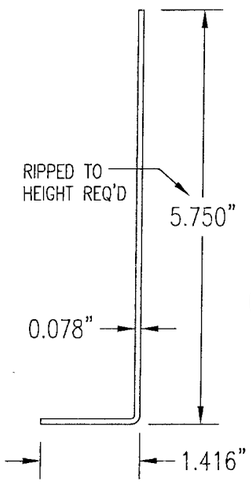

7 SILL ANGLE
6063-T5 ALUMINUM
SCALE: 1/2 FULL

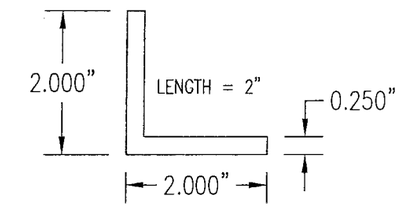

8 CONNECTION ANGLE
6063-T5 ALUMINUM
SCALE: 1/2 FULL

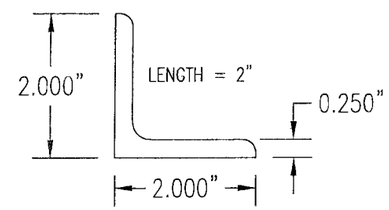

9 CONNECTION ANGLE
A36 STEEL
SCALE: 1/2 FULL

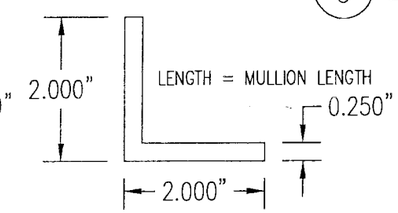

10 MULLION ANGLE
6063-T5 ALUMINUM
SCALE: 1/2 FULL

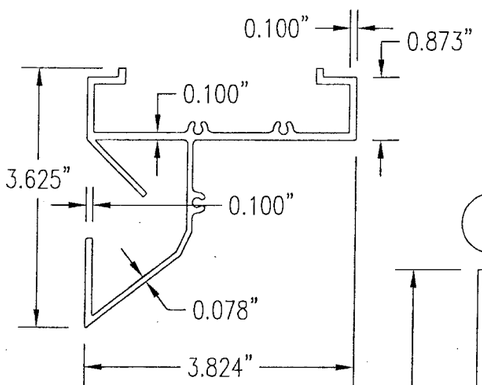

1C OPTIONAL 1-PIECE HEADER
6063-T5 ALUMINUM
SCALE: 1/2 FULL

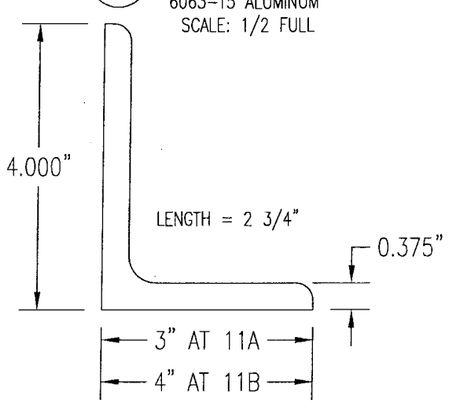

11A 11B MULLION END CONNECTION ANGLE
A36 STEEL
SCALE: 1/2 FULL

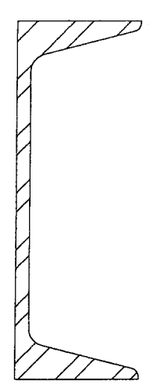

12 C5X6.7 MULLION
A36 STEEL
SCALE: 1/2 FULL

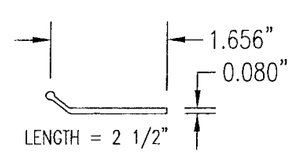

13 PARTIAL BLADE REINFORCEMENT PLATE
6063-T5 ALUMINUM
SCALE: 1/2 FULL

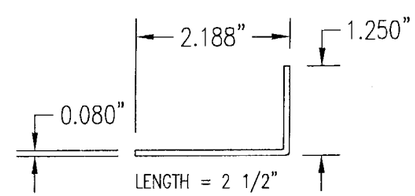

14 PARTIAL BLADE REINFORCEMENT ANGLE
6063-T5 ALUMINUM
SCALE: 1/2 FULL

PRODUCT RENEWED
as complying with the Florida Building Code
Acceptance No 08-0423.04
Expiration Date 07/27/2009
By _____
Miami Dade Product Control Division

DRAWN BY: K.P.S.	CHECKED BY: W.W.S.
PLOT: 1=2	DATE: 11/18/03

NO.	REVISION DESCRIPTION	BY	DATE

DRAWING TITLE
MODEL A220 4" LOUVER SYSTEM

MANUFACTURER
AIR BALANCE INC.
120 SOUTH PLIN STREET
BRADNER, OH 43406
419-865-0000

CONSULTANTS
W. W. SCHAEFER ENGINEERING & CONSULTING, P.A.
8895 N. MILITARY TRAIL; SUITE C-204
PALM BEACH GARDENS, FL 33410
PHONE: 561-775-4902 FAX: 561-775-4903

CERTIFICATION
APR 1 8 2008
WARREN W. SCHAEFER, P.E.
P.E. NO. 44135

DRAWING NO. 1262
REV. A
SHEET NO. 6 OF 7

ALLOWABLE WIND PRESSURE VS. JAMB CLIP SPACING AND PANEL WIDTH

PANEL WIDTH (INCHES)	CLIP SPACING (INCHES)	ALLOWABLE PRESSURE WITH MID SPAN MULLION (PSF)	ALLOWABLE PRESSURE WITHOUT MID SPAN MULLION (PSF)
16	8	150	150
	12	150	150
	16	150	140
	20	150	105
	24	150	70
20	8	150	150
	12	150	140
	16	150	112
	20	150	84
	24	150	56
24	8	150	140
	12	150	117
	16	150	93
	20	150	70
	24	125	47
28	8	150	82
	12	150	68
	16	150	54
	20	150	41
	24	107	27
30	8	150	62
	12	150	52
	16	150	41
	20	140	31
	24	93	–
36	8	150	–
	12	150	–
	16	150	–
	20	125	–
	24	83	–
42	8	150	–
	12	150	–
	16	142	–
	20	107	–
	24	71	–
48	8	150	–
	12	150	–
	16	125	–
	20	93	–
	24	62	–
54	8	150	–
	12	138	–
	16	111	–
	20	83	–
	24	55	–
60.	8	150	–
	12	125	–
	16	100	–
	20	75	–
	24	50	–

MATERIAL LIST

NO.	DESCRIPTION	NOTES/SPECIFICATIONS
		PARTS/EXTRUSIONS
1A	STANDARD HEADER & SILL JAMB	6063-T5 ALUMINUM
1B	OPTIONAL SLOPED SILL	6063-T5 ALUMINUM
1C	OPTIONAL 1-PIECE HEADER	6063-T5 ALUMINUM
2	PARTIAL BLADE & HEAD	6063-T5 ALUMINUM
3	SIDE JAMB	6063-T5 ALUMINUM
4	LOUVER BLADE	6063-T5 ALUMINUM
5	BLADE SUPPORT BRACKET (2 1/2" LONG)	6063-T5 ALUMINUM
6	MULLION CAP	6063-T5 ALUMINUM; FULL LENGTH OF MULLION JAMBS
7	SILL ANGLE	6063-T5 ALUMINUM; FULL WIDTH OF PANEL
8	L2X2X1/4 JAMB CONNECTION ANGLE 2" LONG	6063-T5 ALUMINUM; WITHIN 4" OF JAMB ENDS & SPACED PER LOAD TABLE ON SHT. 2
9	L2X2X1/4 OPTIONAL JAMB CONNECTION ANGLE 2" LONG	A36 STEEL; WITHIN 4" OF JAMB ENDS & SPACED PER LOAD TABLE ON SHT. 2
10	L2X2X1/4 CONTINUOUS MULLION CONNECTION ANGLE	6063-T5 ALUMINUM; FULL LENGTH OF CHANNEL MULLION
11	L4X3X3/8 MULLION END CONNECTION ANGLE 2 3/4" LONG	A36 STEEL; 2 PER MULLION END
12	C5X6.7 MULLION	A36 STEEL; FULL HEIGHT OF PANELS
13	PARTIAL BLADE REINFORCEMENT PLATE (2 1/2" LONG)	6063-T5 ALUMINUM
14	PARTIAL BLADE REINFORCEMENT ANGLE (2 1/2" LONG)	6063-T5 ALUMINUM
15	OPEN	
		FASTENERS
16	1/2" X 2" A307 HEX HEAD PLATED STEEL OR S/STL BOLT	WITH FLAT WASHERS, LOCK WASHER & NUT; 2 PER MULLION END
17	NO. 14 S.S. SMS SCREWS	3 PER MULLION END CLIP WITH MIN. 1 1/2" WOOD EMBED
18	5/8" X 2 1/4" SLEEVE ANCHOR WITH FLAT WASHER	USA KINGPIN ANCHOR; 1 PER CHANNEL END CONNECTION ANGLE INTO CONCRETE ONLY
19	1/2" X 2" A307 HEX HEAD PLATED STEEL OR S/STL BOLT	WITH FLAT WASHERS, LOCK WASHER & NUT; 1 PER CHANNEL END CONNECTION ANGLE INTO STEEL FRAME
20	5/16-18 UNC X 1 1/2" HEX HEAD STEEL OR S/STL BOLT	WITH FLAT WASHER, LOCK WASHER & NUT; WITHIN 4" OF MULLION ENDS & MAX. 8" O.C.
21	NO. 8 X 3/4" SMS SCREW	1 AT EACH LOUVER BLADE SUPPORT BRACKET AT ARCHITECTURAL MAIN MULLIONS & ALL MID-SPAN MULLIONS
22	NO. 14 X 1 1/4" HILTI TEK SCREW	WITHIN 3/4" OF MULLION ENDS & MAX. 4" O.C. INTO FRAME
23	NO. 14 X 1" SMS SCREW	1 AT EACH LOUVER BLADE AT ALL ARCHITECTURAL MAIN MULLIONS & ALL MID-SPAN MULLIONS
24	NO. 7 X 1" SMS SCREW	2 PER EACH LOUVER BLADE END THROUGH JAMB & INTO BLADE SPLINES
25	NO. 14 X 1 1/4" HILTI TEK SCREW	2 PER EACH HEAD, SILL & SIDE JAMB CONNECTION ANGLE
26	1/2" X 2" LAG SCREW WITH FLAT WASHER	1 PER EACH HEAD, SILL & SIDE JAMB CONNECTION ANGLE INTO WOOD FRAME
27	5/8" X 2 1/4" SLEEVE ANCHOR WITH FLAT WASHER	USA KINGPIN ANCHOR; 1 PER EACH HEAD, SILL & SIDE JAMB CONNECTION ANGLE INTO CONCRETE ONLY
28	1/2" X 2" HEX HEAD A307 PLATED STEEL OR S/STL BOLT	WITH FLAT WASHERS, LOCK WASHER & NUT; 1 PER EA. JAMB CONNECTION ANGLE INTO STEEL FRAME
29	3/8" X 1 7/8" SLEEVE ANCHOR WITH FLAT WASHER	RED HEAD DYNABOLT WITH MIN 1 1/2" BLOCK/CONCRETE EMBED (1 PER FRAME SUPPORT CLIP)
30	NO. 8 X 1/2" SMS SCREW	WITHIN 2" OF MULLION ENDS & MAX. 12" O.C. (MULLION CAP TO MULLION)
31	NO. 7 X 1" SMS SCREWS	2 PER FRAME CORNER THROUGH SILL/HEAD FRAME & INTO JAMB SPLINES

PRESSURE TABLE NOTES:

1. WHEN THE PANEL WIDTH IS 30" OR LESS, NO MID SPAN MULLION IS REQUIRED PROVIDING COMPLIANCE WITH THE TABLE.
2. ALL PRESSURES IN THIS TABLE ARE FOR BOTH POSITIVE & NEGATIVE WIND PRESSURE.

PRODUCT RENEWED
as complying with the Florida Building Code
Acceptance No. 08-0423.04
Expiration Date 07/27/2009
By
Miami Dade Product Control Division

DRAWN BY: K.P.S.	CHECKED BY: W.W.S.
PLOT: 1=1	DATE: 11/18/03

NO.	REVISION DESCRIPTION	BY	DATE

DRAWING TITLE
MODEL A220 4" LOUVER SYSTEM

MANUFACTURER
AIR BALANCE INC.
120 SOUTH PLIN STREET
BRADNER, OH 43406
419-865-0000

CONSULTANTS
W. W. SCHAEFER ENGINEERING & CONSULTING, P.A.
8895 N. MILITARY TRAIL; SUITE C-204
PALM BEACH GARDENS, FL 33410
PHONE: 561-775-4902 FAX: 561-775-4903

CERTIFICATION
APR 18 2008
WARREN W. SCHAEFER, P.E.
P.E. NO. 44135

DRAWING NO. 1262
REV. A
SHEET NO. 7 OF 7