MIAMI-DADE

BUILDING CODE COMPLIANCE OFFICE (BCCO)
PRODUCT CONTROL DIVISION

MIAMI-DADE COUNTY, FLORIDA
METRO-DADE FLAGLER BUILDING
140 WEST FLAGLER STREET, SUITE 1603
MIAMI, FLORIDA 33130-1563
(305) 375-2901 FAX (305) 375-2908

NOTICE OF ACCEPTANCE (NOA)

Hanson Roof Tile
1340 SW 34th Avenue
Deerfield Beach, FL 33442

SCOPE:
This NOA is being issued under the applicable rules and regulations governing the use of construction materials. The documentation submitted has been reviewed by Miami-Dade County Product Control Division and accepted by the Board of Rules and Appeals (BORA) to be used in Miami Dade County and other areas where allowed by the Authority Having Jurisdiction (AHJ).

This NOA shall not be valid after the expiration date stated below. The Miami-Dade County Product Control Division (In Miami Dade County) and/or the AHJ (in areas other than Miami Dade County) reserve the right to have this product or material tested for quality assurance purposes. If this product or material fails to perform in the accepted manner, the manufacturer will incur the expense of such testing and the AHJ may immediately revoke, modify, or suspend the use of such product or material within their jurisdiction. BORA reserves the right to revoke this acceptance, if it is determined by Miami-Dade County Product Control Division that this product or material fails to meet the requirements of the applicable building code.

This product is approved as described herein, and has been designed to comply with the Florida Building Code, including the High Velocity Hurricane Zone of the Florida Building Code.

DESCRIPTION: Venetian Roll Roof Tile

LABELING: Each unit shall bear a permanent label with the manufacturer's name or logo, city, state and following statement: "Miami-Dade County Product Control Approved", unless otherwise noted herein

RENEWAL of this NOA shall be considered after a renewal application has been filed and there has been no change in the applicable building code negatively affecting the performance of this product.

TERMINATION of this NOA will occur after the expiration date or if there has been a revision or change in the materials, use, and/or manufacture of the product or process. Misuse of this NOA as an endorsement of any product, for sales, advertising or any other purposes shall automatically terminate this NOA. Failure to comply with any section of this NOA shall be cause for termination and removal of NOA.

ADVERTISEMENT: The NOA number preceded by the words Miami-Dade County, Florida, and followed by the expiration date may be displayed in advertising literature. If any portion of the NOA is displayed, then it shall be done in its entirety.

INSPECTION: A copy of this entire NOA shall be provided to the user by the manufacturer or its distributors and shall be available for inspection at the job site at the request of the Building Official.

This renews NOA#04-0728.01 and consists of pages 1 through 5.
The submitted documentation was reviewed by Alex Tigera.

MIAMI-DADE COUNTY APPROVED

ROOFING ASSEMBLY APPROVAL

Category: Roofing
Sub Category: Roofing Tile
Material: Concrete

1. SCOPE

This new roofing system using **Venetian Roll Tile**, as manufactured Hanson Roof Tile as described in Section 2 of this Notice of Acceptance. For the locations where the pressure requirements, do not exceed the values listed in section 4 herein. The attachment calculations shall be done as a moment based system.

2. PRODUCT DESCRIPTION

Manufactured by Applicant	Dimensions	Test Specifications	Product Description
Venetian Roll Tile	Length: 16½" Width: 13" 1" thick	TAS 112	Low profile, interlocking, extruded concrete roof tile equipped with two nail holes. For direct deck or battened nail-on, mortar or adhesive set applications.
Trim Pieces	Length: varies Width: varies Varying thickness	TAS 112	Accessory trim, concrete roof pieces for use at hips, rakes, ridges and valley terminations. Manufactured for each tile profile.

2.1 SUBMITTED EVIDENCE:

Test Agency	Test Identifier	Test Name/Report	Date
PRI Asphalt Technologies, Inc.	CRTL-001-02-01	TAS 112 TAS 101	03/04/03
PRI Asphalt Technologies, Inc.	CRTL-001-02-02	TAS 102	01/16/03
PRI Asphalt Technologies, Inc.	CRTL-001-02-03	TAS 102	01/16/03
PRI Asphalt Technologies, Inc.	CRTL-001-02-04	TAS 100	03/03/03

3. LIMITATIONS

3.1 Fire classification is not part of this acceptance.
3.2 For mortar or adhesive set tile applications, a static field uplift test in accordance with RAS 106 may be required, refer to applicable building code.
3.3 Applicant shall retain the services of a Miami-Dade County Certified Laboratory to perform quarterly test in accordance with TAS 112, appendix 'A'. Such testing shall be submitted to the Building Code Compliance Office for review.
3.4 Minimum underlayment shall be in compliance with the applicable Roofing Applications Standards listed section 4.1 herein.

3.5 30/90 hot mopped underlayment applications may be installed perpendicular to the roof slope unless stated otherwise by the underlayment material manufacturers published literature.

3.6 This acceptance is for wood deck applications. Minimum deck requirements shall be in compliance with applicable building code.

4. INSTALLATION

4.1 Currier 'Venetian Roll' Roof Tile and its components shall be installed in strict compliance with Roofing Application Standard RAS 118, 119, & 120.

4.2 Data For Attachment Calculations

Table 1: Average Weight (W) and Dimensions (l x w)

Tile Profile	Weight-W (lbf)	Length-l (ft)	Width-w (ft)
Venetian Roll	11	1.50	1.08

Table 1: Aerodynamic Multipliers - λ (ft^3)

Tile Profile	λ (ft^3) Batten Application	λ (ft^3) Direct Deck Application
Venetian Roll	0.303	0.329

Table 2: Restoring Moments due to Gravity - M_g (ft-lbf)

Tile Profile	2": 12"		3": 12"		4": 12"		5": 12"		6": 12"		7": 12" or greater	
Venetian Roll	Battens	Direct Deck	Battens	Direct Deck	Battens	Direct Deck	Battens	Direct Deck	Battens	Direct Deck	Battens	Direct Deck
	7.41	7.42	7.34	7.35	7.22	7.23	7.06	7.08	6.89	6.91	6.69	N/A

Table 3: Attachment Resistance Expressed as a Moment - M_f (ft-lbf) For Nail-On Systems

Tile Profile	Fastener Type	Direct Deck (Min 15/32" plywood)	Battens
Venetian Roll	1 #8 Screw	28.3[1]	21.1[1]

1 Fastener placed in factory formed opening 1-¾" from the head of tile and 4-¾" from the overlap edge of tile.

Table 4: Attachment Resistance Expressed as a Moment - M_f (ft-lbf) For Single Patty Adhesive Set Systems

Tile Profile	Tile Application	Minimum Attachment Resistance
Venetian Roll	Polyfoam PolyPro™	42.3[2]

2 Medium paddy placement of 38 grams of PolyPro™.

5. LABELING

All tiles shall bear the imprint or identifiable marking of the manufacturer's name or logo as seen below, or following statement: "Miami-Dade County Product Control Approved".

Hanson
Venetian

Or

VENETIAN ROLL
CURRIER USA

6. BUILDING PERMIT REQUIREMENTS

6.1 Application for building permit shall be accompanied by copies of the following:

6.1.1 This Notice of Acceptance.

6.1.2 Any other documents required by the Building Official or applicable building code in order to properly evaluate the installation of this system.

PROFILE DRAWINGS

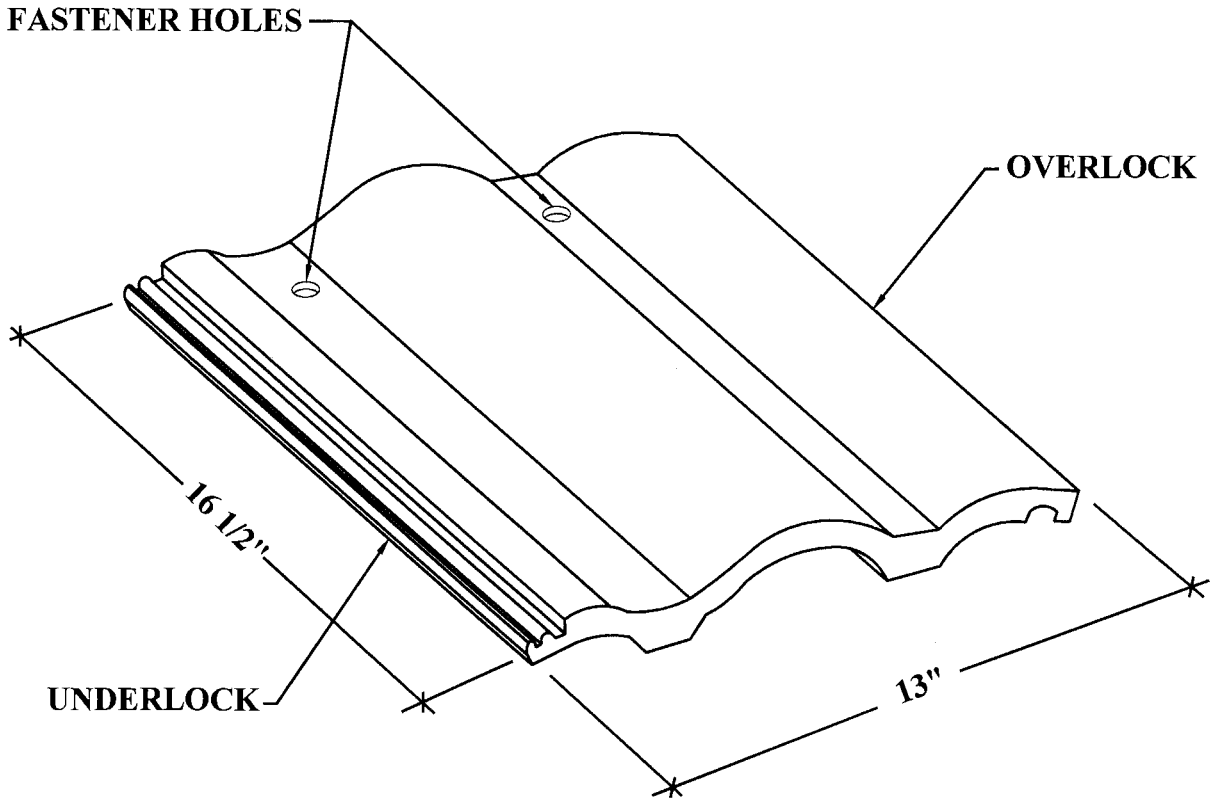

VENETIAN ROLL CONCRETE ROOF TILE

END OF THIS ACCEPTANCE