MIAMI-DADE

BUILDING CODE COMPLIANCE OFFICE (BCCO)
PRODUCT CONTROL DIVISION

MIAMI-DADE COUNTY, FLORIDA
METRO-DADE FLAGLER BUILDING
140 WEST FLAGLER STREET, SUITE 1603
MIAMI, FLORIDA 33130-1563
(305) 375-2901 FAX (305) 375-2908

NOTICE OF ACCEPTANCE (NOA)

The Dow Chemical Company
1605 Joseph Drive
200 Larkin Center
Midland, MI 48674

SCOPE:
This NOA is being issued under the applicable rules and regulations governing the use of construction materials. The documentation submitted has been reviewed by the BCCO and accepted by the Building Code and Product Review Committee to be used in Miami Dade County and other areas where allowed by the Authority Having Jurisdiction (AHJ).

This NOA shall not be valid after the expiration date stated below. The BCCO (In Miami Dade County) and/or the AHJ (in areas other than Miami Dade County) reserve the right to have this product or material tested for quality assurance purposes. If this product or material fails to perform in the accepted manner, the manufacturer will incur the expense of such testing and the AHJ may immediately revoke, modify, or suspend the use of such product or material within their jurisdiction. BCCO reserves the right to revoke this acceptance, if it is determined by BCCO that this product or material fails to meet the requirements of the applicable building code.

This product is approved as described herein, and has been designed to comply with the High Velocity Hurricane Zone of the Florida Building Code.

DESCRIPTION: Tile Bond-Roof Tile Adhesive

RENEWAL of this NOA shall be considered after a renewal application has been filed and there has been no change in the applicable building code negatively affecting the performance of this product.

TERMINATION of this NOA will occur after the expiration date or if there has been a revision or change in the materials, use, and/or manufacture of the product or process. Misuse of this NOA as an endorsement of any product, for sales, advertising or any other purposes shall automatically terminate this NOA. Failure to comply with any section of this NOA shall be cause for termination and removal of NOA.

ADVERTISEMENT: The NOA number preceded by the words Miami-Dade County, Florida, and followed by the expiration date may be displayed in advertising literature. If any portion of the NOA is displayed, then it shall be done in its entirety.

INSPECTION: A copy of this entire NOA shall be provided to the user by the manufacturer or its distributors and shall be available for inspection at the job site at the request of the Building Official.

This NOA revises NOA No. 06-0417.02 and consists of pages 1 through 9.
The submitted documentation was reviewed by Alex Tigera.

MIAMI-DADE COUNTY APPROVED

ROOFING ASSEMBLY APPROVAL

Category: Roofing
Sub Category: 07320 Roof Tile Adhesive
Material: Polyurethane

SCOPE:

This approves **TILE BOND** as manufactured by **The Dow Chemical Company,** as described in this Notice of Acceptance, designed to comply with the High Velocity Hurricane Zone of the Florida Building Code. For the locations where the pressure requirements, as determined by applicable building code, do not exceed the design pressure values; as obtained by calculations in compliance with RAS 127, using **TILE-BOND**, and where the attachment calculations shall be done as an uplift based system.

PRODUCT DESCRIPTION:

Manufactured by Applicant	Dimensions	Product Description
Tile-Bond	Factory premixed canisters	Single component polyurethane foam roof tile adhesive

COMPONENTS OR PRODUCTS MANUFACTURED BY OTHERS:

Any Miami-Dade County Product Control Accepted Roof Tile Assembly having a current NOA which list uplift resistance values with the use of TILE-BOND roof tile adhesive.

TYPICAL PHYSICAL PROPERTIES:

Property	Test	Results
Density	ASTM D 1622	1.91 lbs./ft.^{3}
Compressive Strength	ASTM D 1621	10 PSI @ 10% deflection
Tensile Strength	ASTM D 1623	17.0 lbf @ 180°F, 65% RH for 90 days, concrete to concrete
Water Absorption	ASTM D 2842	3.96% absorbed by Volume
Moisture Vapor Transmission	ASTM E 96	2.67Perm / Inch
Dimensional Stability	ASTM D 2126	1.01% Volume Change @ -40°C., 2 weeks 10.44% Volume Change @70°C., 97% Humidity, 2 weeks

LIMITATIONS:

1. Fire classification is not part of this acceptance.
2. All approved products listed herein shall be labeled and shall bear the imprint or identifiable marking of the manufacturer's name or logo and following statement: "Miami-Dade County Product Control Approved" or the Miami-Dade County Product Control Seal as shown below.

MIAMI-DADE COUNTY
APPROVED

3. TILE BOND shall solely be used with flat, low, medium, and high tile profiles.
4. Minimum underlayment shall be in compliance with the Roofing Application Standard RAS 120.
5. Roof Tile manufactures acquiring acceptance for the use of TILE-BOND roof tile adhesive with their tile assemblies shall test in accordance with RAS 101 with section 10.4 as modified herein.

6. $$F' = \frac{\left(\frac{F}{2}\right) - W}{MS}$$

INSTALLATION:

1. TILE BOND may used with any roof tile assembly having a current NOA that lists uplift resistance values with the use of TILE BOND.
2. TILE BOND shall be applied in compliance with the Component Application section and the corresponding Placement Details noted herein. The roof tile assembly's adhesive attachment with the use of TILE BOND shall provide sufficient attachment resistance, expressed as an uplift based system, to meet or exceed the uplift resistance determined in compliance with Roofing Application Standards RAS 127. The adhesive attachment data is noted in the roof tile assembly NOA
3. TILE-BOND roof tile adhesive and its components shall be installed in accordance with Roofing Application Standard RAS 120, and The Dow Chemical Company TILE BOND Operating Instruction and Maintenance Booklet.
4. Installation must be by a Factory Trained 'Qualified Applicator' approved and licensed by The Dow Chemical Company.
5. Pressure treated wood filler block shall be required on all eave course of all tile profiles, except on two piece barrel tile
6. Tiles must be adhered in freshly applied adhesive. Tile must be set within 4 minutes after TILE BOND has been dispensed.
7. TILE BOND placement and minimum patty weight shall be in accordance with the 'Placement Details' herein. Each generic tile profile requires the specific placement noted herein.

Table 1: Adhesive Placement For Each Generic Tile Profile			
Tile Profile	**Placement Detail**	**Minimum patty Weight per tile (grams)**	**Contact Area (Square inches)**
Flat / Low Profile	#1	11.1	19.5
Medium Profile	#2	11.0	19.5
High Profile (Head) High Profile (Nose)	#3	22.0 11.0	39 19.5
Two Piece Barrel	#4	11.6	20

LABELING:

All TILE BOND containers shall comply with the Standard Conditions listed herein.

BUILDING PERMIT REQUIREMENTS:

Any documentation required by the Building Official or applicable building code in order to properly evaluate the installation of this system

EVIDENCE SUBMITTED:

Test Agency	Test Identifier	Test Name/Report	Date
Center for Applied Engineering	25-7512-1	TAS 101	01/25/96
	25-7512-2	TAS 101	01/25/96
	25-7512-3	TAS 101	01/25/96
	25-77512-4	TAS 101	01/25/96
	25-7781	Physical Properties Testing	11/07/96
	257794-2	SSTD 11-93	10/03/96
South Research Institute	01.8366-014	ASTM E108-95a	February 1997
Walker Engineering, Inc.	N/A	Evaluation of Test on a Two-pad System	12/16/97
Celotex Corp. Testing Services	520111-1	TAS 101	12/28/98
	520111-2	TAS 101	12/28/98
	520111-3	TAS 101	12/28/98
	520111-4	TAS 101	12/28/98
	520111-7	TAS 101	12/28/98
	520111-8	TAS 101	12/28/98
	520111-12	TAS 101	12/28/98
	520135-3	TAS 101	02/01/99
	520135-4	TAS 101	02/01/99
	520135-5	TAS 101	02/01/99
IBA Consultants Inc.	4848-8	TAS 101	05/19/08
	4848-7	TAS 101	05/19/08
	4848-6	TAS 101	05/19/08
	4848-5	TAS 101	05/19/08
	4848-4	TAS 101	05/19/08
	4848-3	TAS 101	05/19/08
	4848-2	TAS 101	05/19/08
	4848-1	TAS 101	05/19/08

ADHESIVE PLACEMNT DETAIL

LOW (FLAT) PROFILE
DETAIL #1

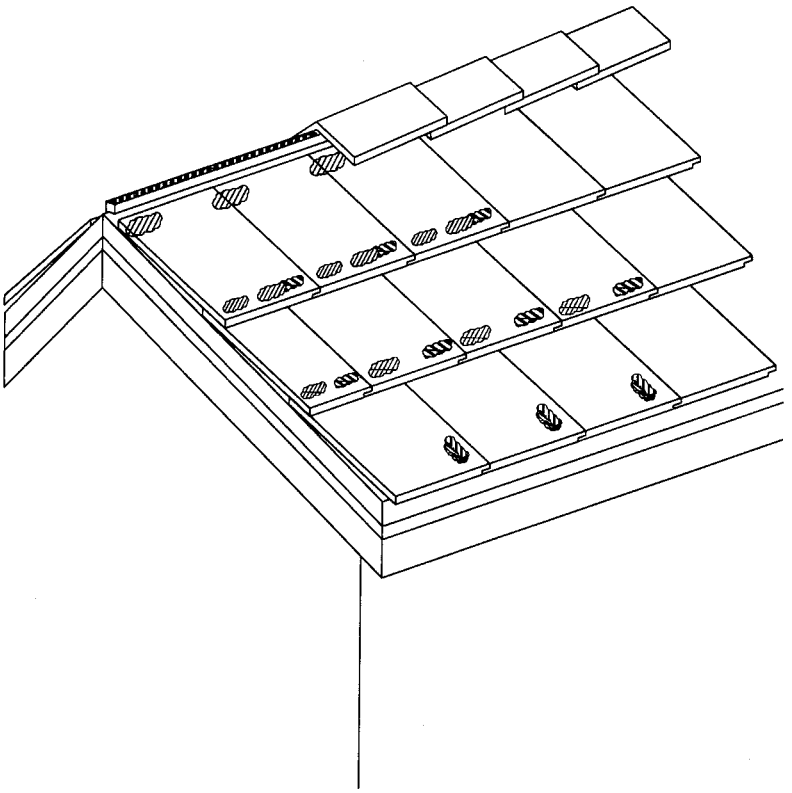

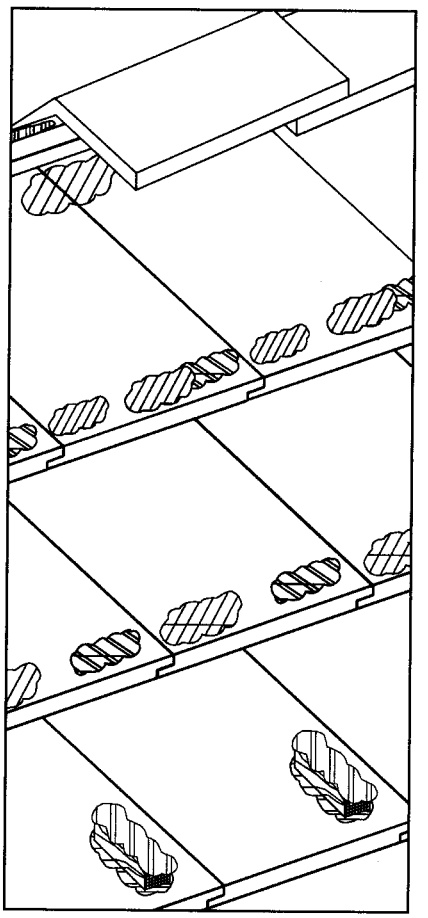

MEDIUM PROFILE
DETAIL #2

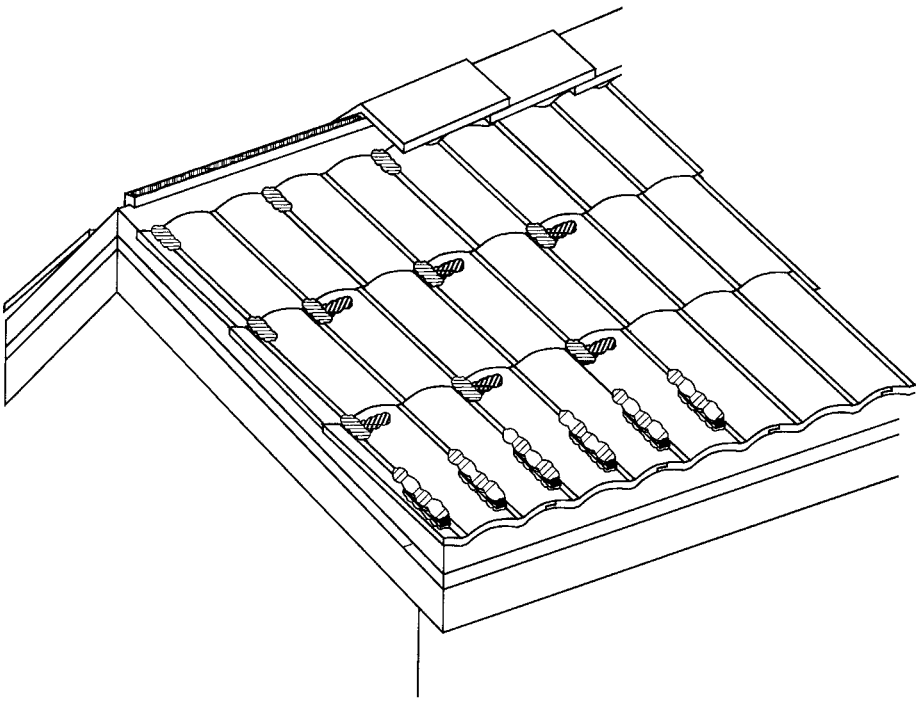

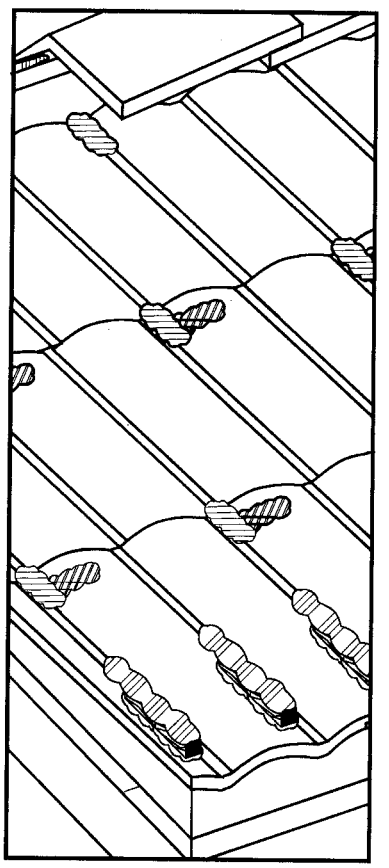

HIGH PROFILE
DETAIL #3

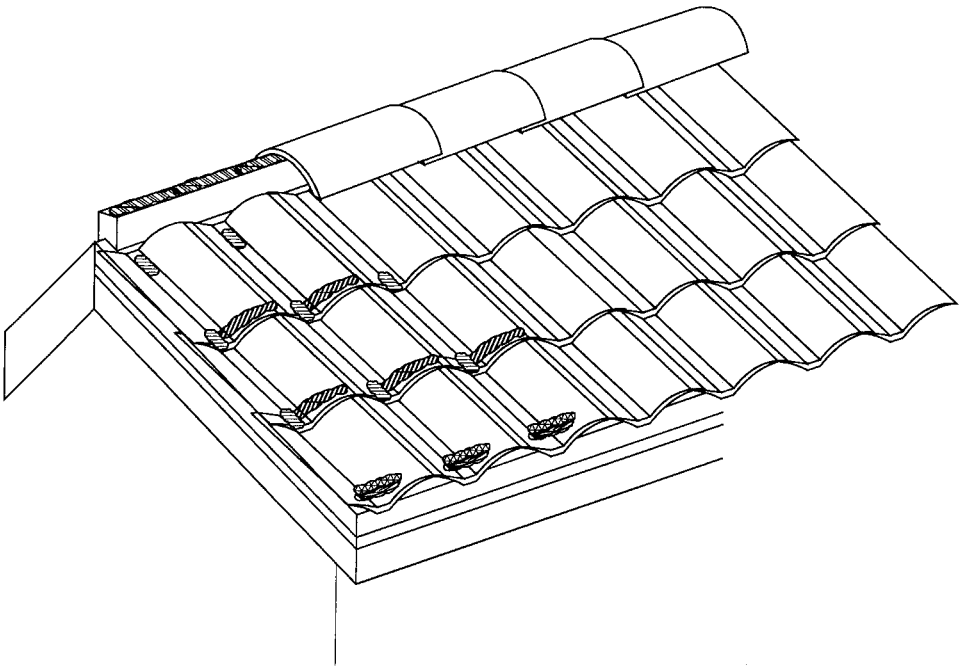

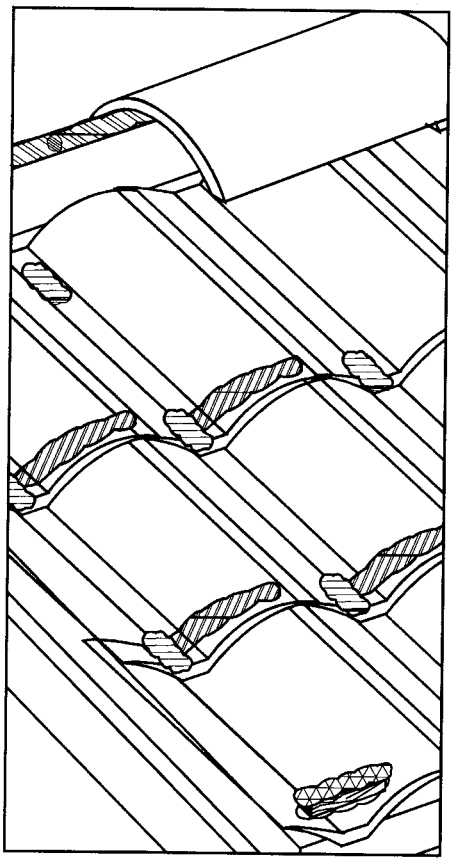

BARREL PROFILE
DETAIL #4

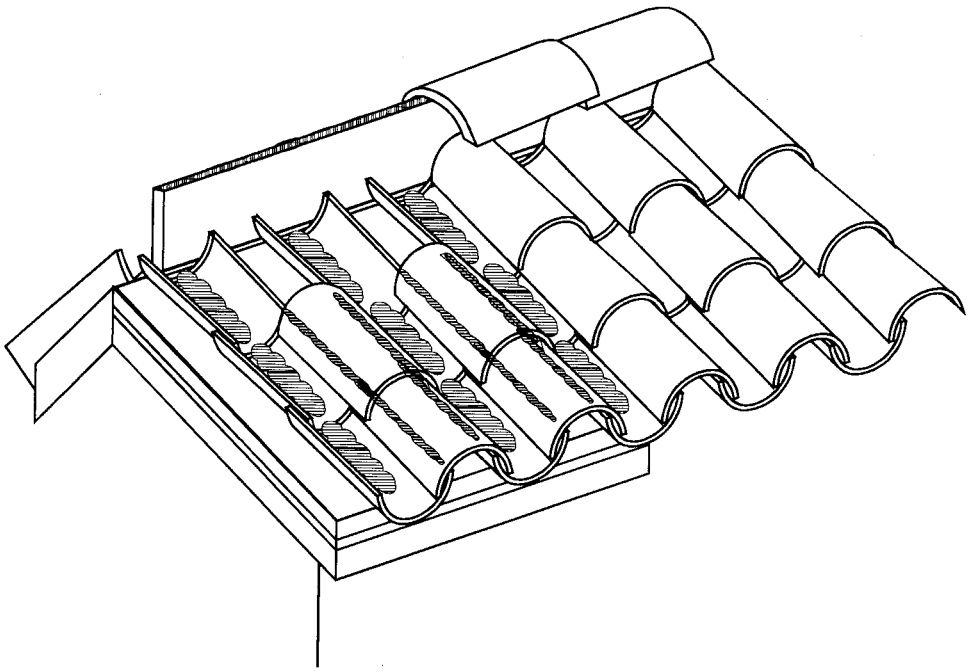

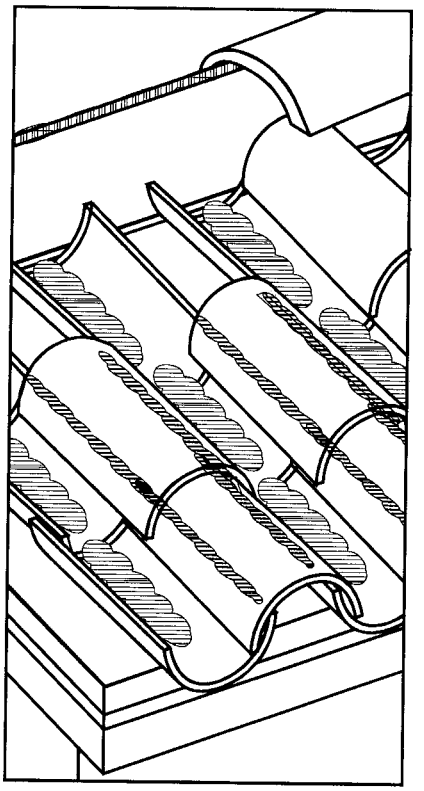

END OF THIS ACCEPTANCE