MIAMI-DADE COUNTY
BUILDING CODE COMPLIANCE OFFICE (BCCO)
PRODUCT CONTROL DIVISION

MIAMI-DADE COUNTY, FLORIDA
METRO-DADE FLAGLER BUILDING
140 WEST FLAGLER STREET, SUITE 1603
MIAMI, FLORIDA 33130-1563
(305) 375-2901 FAX (305) 375-2908
www.buldingcodeonline.com

NOTICE OF ACCEPTANCE (NOA)

ES Windows LLC
10653 NE Quaybridge Ct.
Miami, FL 33138

SCOPE:

This NOA is being issued under the applicable rules and regulations governing the use of construction materials. The documentation submitted has been reviewed by Miami-Dade County Product Control Division and accepted by the Board of Rules and Appeals (BORA) to be used in Miami Dade County and other areas where allowed by the Authority Having Jurisdiction (AHJ).

This NOA shall not be valid after the expiration date stated below. The Miami-Dade County Product Control Division (In Miami Dade County) and/or the AHJ (in areas other than Miami Dade County) reserve the right to have this product or material tested for quality assurance purposes. If this product or material fails to perform in the accepted manner, the manufacturer will incur the expense of such testing and the AHJ may immediately revoke, modify, or suspend the use of such product or material within their jurisdiction. BORA reserves the right to revoke this acceptance, if it is determined by Miami-Dade County Product Control Division that this product or material fails to meet the requirements of the applicable building code.

This product is approved as described herein, and has been designed to comply with the Florida Building Code, including the High Velocity Hurricane Zone.

DESCRIPTION: Series 1000 Aluminum Single Hung Window – L.M.I.

APPROVAL DOCUMENT: Drawing No. **W03-56**, titled "Series-1000 Alum. Single Hung Window (L.M.I.)", sheets 1 through 6 of 6, dated 07/31/03 with revision F dated 04/23/08, prepared by Al-Farooq Corporation, signed and sealed by Humayoun Farooq, P.E., bearing the Miami-Dade County Product Control Revision stamp with the Notice of Acceptance number and expiration date by the Miami-Dade County Product Control Division.

MISSILE IMPACT RATING: Large and Small Missile Impact Resistant

LABELING: Each unit shall bear a permanent label with the manufacturer's name or logo, city, state and following statement: "Miami-Dade County Product Control Approved" or the Product Control Seal, unless otherwise noted herein.

RENEWAL of this NOA shall be considered after a renewal application has been filed and there has been no change in the applicable building code negatively affecting the performance of this product.

TERMINATION of this NOA will occur after the expiration date or if there has been a revision or change in the materials, use, and/or manufacture of the product or process. Misuse of this NOA as an endorsement of any product, for sales, advertising or any other purposes shall automatically terminate this NOA. Failure to comply with any section of this NOA shall be cause for termination and removal of NOA.

ADVERTISEMENT: The NOA number preceded by the words Miami-Dade County, Florida, and followed by the expiration date may be displayed in advertising literature. If any portion of the NOA is displayed, then it shall be done in its entirety.

INSPECTION: A copy of this entire NOA shall be provided to the user by the manufacturer or its distributors and shall be available for inspection at the job site at the request of the Building Official.

This NOA **revises and renews NOA # 07-0928.14** and consists of this page 1 and evidence pages E-1 and E-2, as well as approval document mentioned above.

The submitted documentation was reviewed by **Manuel Perez, P.E.**

MIAMI-DADE COUNTY APPROVED

NOA No. 08-0527.12
Expiration Date: November 6, 2013
Approval Date: July 10, 2008

NOTICE OF ACCEPTANCE: EVIDENCE SUBMITTED

A. DRAWINGS

1. Manufacturer's die drawings and sections.
2. Drawing No **W03-56**, Sheets 1 through 6 of 6, titled "Series-1000 Alum. Single Hung Window (L.M.I.)", dated 07/31/03 with revision F dated 04/23/08, prepared by Al-Farooq Corporation, signed and sealed by Humayoun Farooq, P.E.

B. TESTS

1. Test reports on: 1) Air Infiltration Test, per FBC, TAS 202-94
   2) Uniform Static Air Pressure Test, Loading per FBC TAS 202-94
   3) Water Resistance Test, per FBC, TAS 202-94
   4) Large Missile Impact Test per FBC, TAS 201-94
   5) Cyclic Wind Pressure Loading per FBC, TAS 203-94
   6) Forced Entry Test, per FBC 2411 3.2.1, TAS 202-94

   along with marked-up drawings and installation diagram of series 1000 aluminum single hung window, prepared by Fenestration Testing Laboratory, Test Report No. **FTL-5337**, dated 01/25/08, signed and sealed by Michael Wenzel, P. E.
   (Submitted under previous NOA #07-0928.14)
2. Test reports on: 1) Large Missile Impact Test, per FBC, TAS 201-94
   2) Cyclic Wind Pressure Loading, per FBC, TAS 203-94

   along with marked-up drawings and installation diagram of an aluminum single hung window, prepared by Hurricane Engineering & Testing, Inc., Test Report No. **HETI-05-1953,** dated 04/25/05, signed and sealed by Ivonne Ghia, P.E.
   (Submitted under previous NOA #05-0720.01)
3. Test reports on: 1) Air Infiltration Test, per FBC, TAS 202-94
   2) Uniform Static Air Pressure Test, Loading per FBC, TAS 202-94
   3) Water Resistance Test, per FBC, TAS 202-94
   4) Forced Entry Test, per FBC 2411 3.2.1, TAS 202-94
   5) Large Missile Impact Test, per FBC, TAS 201-94
   6) Cyclic Wind Pressure Loading, per FBC, TAS 203-94

   along with marked-up drawings and installation diagram of an aluminum single hung window, prepared by Hurricane Engineering & Testing, Inc., Test Report No. **HETI-05-1448,** dated 04/22/05, signed and sealed by Ivonne Ghia, P.E.
   (Submitted under previous NOA #05-0720.01)
4. Test reports on: 1) Air Infiltration Test, per FBC, TAS 202-94
   2) Uniform Static Air Pressure Test, Loading per FBC, TAS 202-94
   3) Water Resistance Test, per FBC, TAS 202-94
   4) Forced Entry Test, per FBC 2411 3.2.1, TAS 202-94
   5) Large Missile Impact Test, per FBC, TAS 201-94
   6) Cyclic Wind Pressure Loading, per FBC, TAS 203-94

   along with marked-up drawings and installation diagram of an aluminum single hung windows, prepared by Fenestration Testing Laboratory, Inc., Test Report No. **FTL-3820** dated 06/09/03, signed and sealed by Joseph Chan, P.E
   (Submitted under previous NOA #03-0910.03)

Manuel Perez, P.E.
Product Control Examiner
NOA No. 08-0527.12
Expiration Date: November 6, 2013
Approval Date: July 10, 2008

NOTICE OF ACCEPTANCE: EVIDENCE SUBMITTED

5. Test reports on: 1) Air Infiltration Test, per FBC, TAS 202-94
   2) Uniform Static Air Pressure Test, Loading per FBC, TAS 202-94
   3) Water Resistance Test, per FBC, TAS 202-94
   4) Forced Entry Test, per FBC 2411 3.2.1, TAS 202-94
   5) Large Missile Impact Test, per FBC, TAS 201-94
   6) Cyclic Wind Pressure Loading, per FBC, TAS 203-94

   along with marked-up drawings and installation diagram of an aluminum single hung windows, prepared by Fenestration Testing Laboratory, Inc., Test Report No. **FTL-3806** dated 06/09/03, signed and sealed by Joseph Chan, P.E.
   (Submitted under previous NOA #03-0910.03)

C. CALCULATIONS

1. Anchor verification calculations and structural analysis, complying with FBC-2004 and 2007, prepared by Al-Farooq Corporation, dated 04/21/08, signed and sealed by Humayoun Farooq, P.E. **Complies with ASTM E1300-02/04**

D. QUALITY ASSURANCE

1. Miami Dade Building Code Compliance Office (BCCO).

E. MATERIAL CERTIFICATIONS

1. Notice of Acceptance No. **07-1116.04** issued to E.I. DuPont DeNemours & Co., Inc. for their "**DuPont SentryGlas ® Plus**" dated 01/03/08, expiring on 01/14/12.
2. Notice of Acceptance No. **05-1208.02** issued to E.I. DuPont DeNemours & Co., Inc. for their "**DuPont Butacite PVB Interlayer**" dated 01/05/06, expiring on 12/11/10.

F. STATEMENTS

1. Statement letter of conformance, dated April 18, 2008, signed and sealed by Humayoun Farooq, P.E.
2. Statement letter of no financial interest, dated April 18, 2008, signed and sealed by Humayoun Farooq, P.E.
3. Laboratory compliance letter for Test Report No. **FTL-5337**, issued by Fenestration Testing Laboratory, Inc., dated February 13, 2008, signed and sealed by Michael Wenzel, P.E.
4. Proposal #**07-3815** issued to ES Windows LLC by BCCO Product Control Division, dated 12/18/07 signed by Manuel Perez, P.E.

G. OTHER

1. Notice of Acceptance No. **07-0928.14**, issued to ES Windows LLC for their Series 1000 Aluminum Single Hung Window – L.M.I., approved on 05/08/08 and expiring on 11/06/08.

Manuel Perez, P.E.
Product Control Examiner
NOA No. 08-0527.12
Expiration Date: November 6, 2013
Approval Date: July 10, 2008

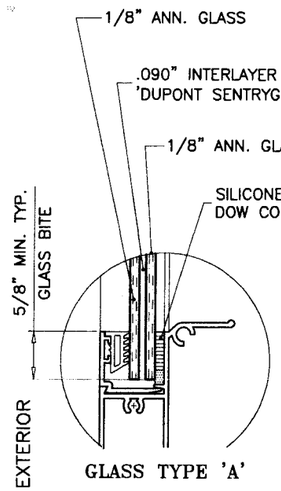

GLASS TYPE 'A'

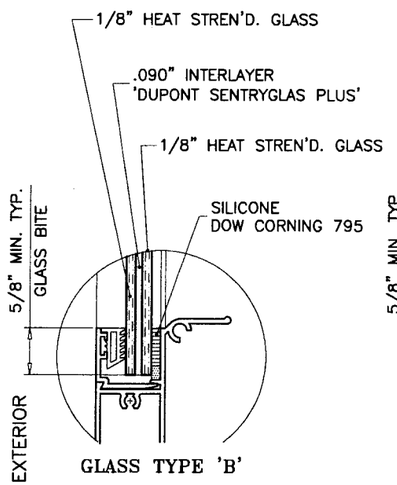

GLASS TYPE 'B'

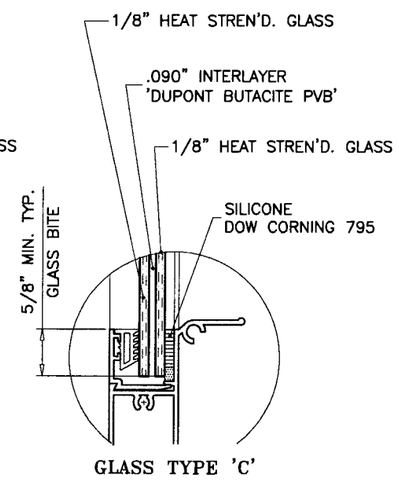

GLASS TYPE 'C'

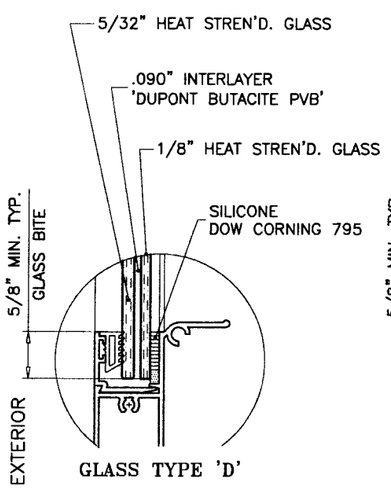

GLASS TYPE 'D'

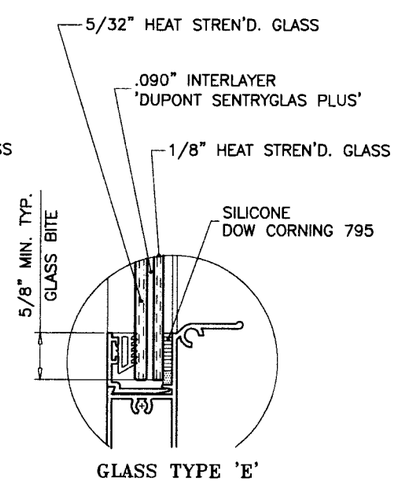

GLASS TYPE 'E'

GLAZING OPTIONS

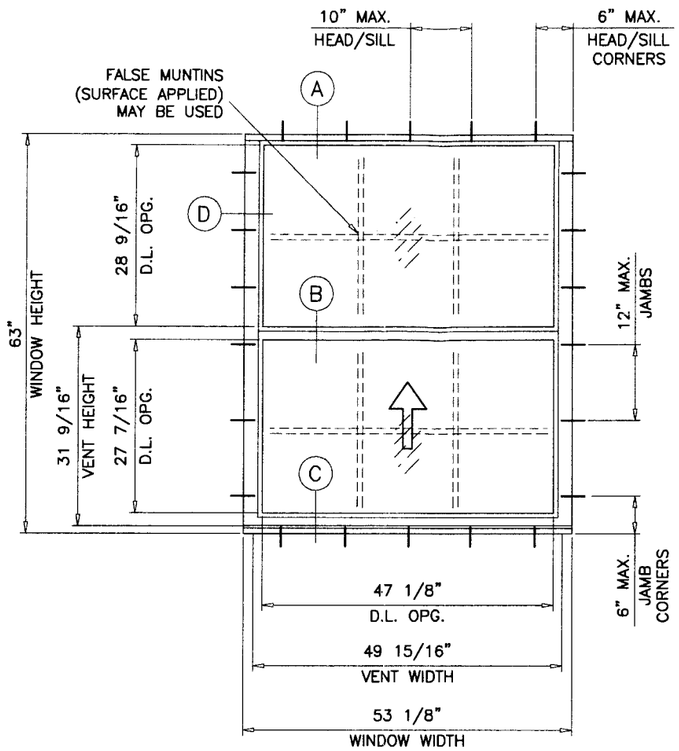

TYPICAL ELEVATION

(STD. SILL)

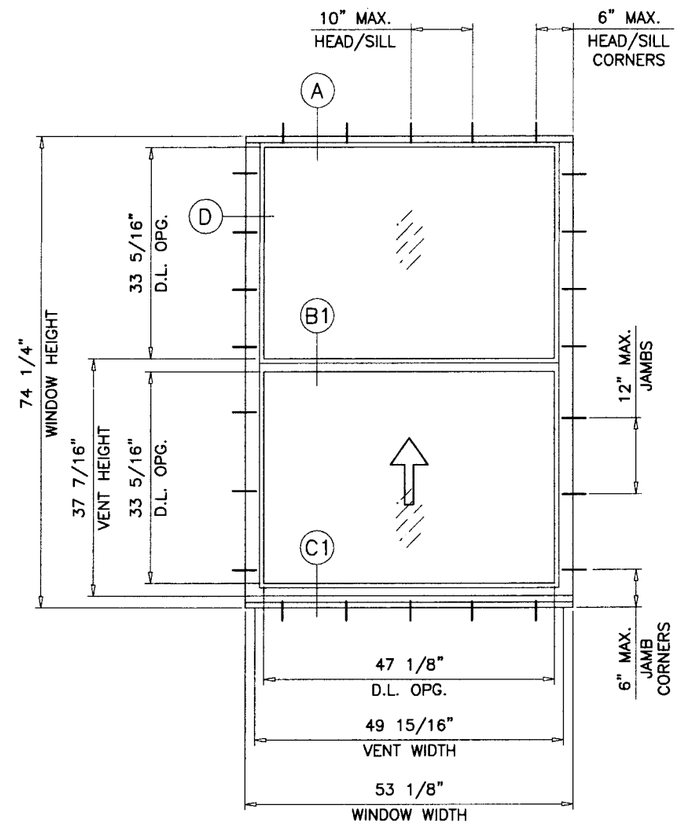

TYPICAL ELEVATION

(HI-RISE SILL)

SERIES-1000 ALUM SINGLE HUNG WINDOW

DESIGN LOAD RATINGS FOR THESE WINDOWS TO BE AS PER CHARTS SHOWN ON SHEET 2.

APPROVAL APPLIES TO SINGLE UNITS OR SIDE BY SIDE COMBINATIONS OF S.H./S.H. OR SINGLE HUNG WITH OTHER WINDOW TYPES IN MODULES OF TWO OR MORE WINDOWS USING MIAMI-DADE COUNTY APPROVED MULLIONS IN BETWEEN. LOWER DESIGN PRESSURE FROM WINDOWS OR MULLION APPROVAL WILL APPLY TO ENTIRE SYSTEM.

THIS PRODUCT HAS BEEN DESIGNED AND TESTED TO COMPLY WITH THE REQUIREMENTS OF THE FLORIDA BUILDING CODE 2004/2007 EDITION INCLUDING HIGH VELOCITY HURRICANE ZONE (HVHZ).

WOOD BUCKS BY OTHERS, MUST BE ANCHORED PROPERLY TO TRANSFER LOADS TO THE STRUCTURE.

ANCHORS SHALL BE AS LISTED, SPACED AS SHOWN ON DETAILS, ANCHORS EMBEDMENT TO BASE MATERIAL SHALL BE BEYOND WALL DRESSING OR STUCCO.

ANCHORING OR LOADING CONDITIONS NOT SHOWN IN THESE DETAILS ARE NOT PART OF THIS APPROVAL.

A LOAD DURATION INCREASE IN ALLOWABLE STRESS IS USED IN DESIGN OF ANCHORS INTO WOOD ONLY.

MATERIALS INCLUDING BUT NOT LIMITED TO STEEL/METAL SCREWS, THAT COME INTO CONTACT WITH OTHER DISSIMILAR MATERIALS SHALL MEET THE REQUIREMENTS OF 2004/2007 FLORIDA BLDG. CODE SECTION 2003.8.4.

THESE WINDOWS ARE RATED FOR LARGE MISSILE IMPACT. SHUTTERS ARE NOT REQUIRED.

Engr: DR. HUMAYOUN FAROOQ
STRUCTURES
FLA. PE # 16557
C.A.N. 3538

JUN 03 2008

PRODUCT REVISED
as complying with the Florida
Building Code
Acceptance No. 08-0527.12
Expiration Date NOV. 6, 2013
By Manuel Perez
Miami-Dade Product Control
Division

AL-FAROOQ CORPORATION
ENGINEERS & PRODUCT DEVELOPMENT
1235 S.W. 87 AVE
MIAMI, FLORIDA 33174
TEL. (305) 264-8100 FAX. (305) 262-6978
COMP-ANL\W03-56ESW

SERIES-1000 ALUM SINGLE HUNG WINDOW (L.M.I.)

E.S. WINDOWS
5220 N.W. 72 AVE. BAY #4
MIAMI, FL. 33166
TEL. (305) 640-9857 FAX. (305) 593-2074

revisions:

no	date	by	description
B	07.11.05		GENERAL REV.
C	08.03.05		REV. PER BCCO COMMENTS
D	11.10.05		UPDATED FOR 2004 FBC
E	03.03.06		NO CHANGE THIS SHEET
F	04.23.08		GENERAL REVISION

date: 07-31-03
scale: 1/2"=1'-0"
dr. by: HAMID
chk. by:

drawing no.
W03-56

EQUAL LITES WINDOWS
DESIGN LOAD CAPACITY – PSF (HI-RISE SILL)

WINDOW DIMS.		STANDARD TOP RAIL				HEAVY DUTY TOP RAIL	
		GLASS TYPE 'A'		GLASS TYPES 'B', 'C', 'D' & 'E'		GLASS TYPES 'B', 'C', 'D' & 'E'	
WIDTH	HEIGHT	EXT.(+)	1NT.(–)	EXT.(+)	1NT.(–)	EXT.(+)	1NT.(–)
19–1/8"	26" (3)	70.0	80.0	80.0	90.0	80.0	90.0
26–1/2"		70.0	80.0	80.0	90.0	80.0	90.0
37"		70.0	80.0	80.0	90.0	80.0	90.0
42"		70.0	80.0	80.0	90.0	80.0	90.0
49"		70.0	80.0	80.0	90.0	80.0	90.0
53–1/8"		70.0	80.0	80.0	90.0	80.0	90.0
19–1/8"	38–3/8" (4)	70.0	80.0	80.0	90.0	80.0	90.0
26–1/2"		70.0	80.0	80.0	90.0	80.0	90.0
37"		70.0	80.0	80.0	90.0	80.0	90.0
42"		70.0	80.0	80.0	90.0	80.0	90.0
49"		70.0	80.0	80.0	90.0	80.0	90.0
53–1/8"		70.0	80.0	80.0	90.0	80.0	90.0
19–1/8"	50–5/8" (5)	70.0	80.0	80.0	90.0	80.0	90.0
26–1/2"		70.0	80.0	80.0	90.0	80.0	90.0
37"		70.0	80.0	80.0	90.0	80.0	90.0
42"		70.0	80.0	80.0	90.0	80.0	90.0
49"		70.0	80.0	80.0	90.0	80.0	90.0
53–1/8"		70.0	80.0	80.0	90.0	80.0	90.0
19–1/8"	58" (5)	70.0	80.0	80.0	90.0	80.0	90.0
26–1/2"		70.0	80.0	80.0	90.0	80.0	90.0
37"		70.0	80.0	80.0	90.0	80.0	90.0
42"		70.0	80.0	80.0	90.0	80.0	90.0
49"		70.0	80.0	80.0	90.0	80.0	90.0
53–1/8"		70.0	80.0	80.0	90.0	80.0	90.0
19–1/8"	63" (6)	70.0	80.0	80.0	90.0	80.0	90.0
26–1/2"		70.0	80.0	80.0	90.0	80.0	90.0
37"		70.0	80.0	80.0	90.0	80.0	90.0
42"		70.0	80.0	80.0	90.0	80.0	90.0
49"		70.0	80.0	80.0	90.0	80.0	90.0
53–1/8"		70.0	80.0	80.0	90.0	80.0	90.0
19–1/8"	68" (6)	70.0	80.0	80.0	90.0	80.0	90.0
26–1/2"		70.0	80.0	80.0	90.0	80.0	90.0
37"		70.0	80.0	80.0	90.0	80.0	90.0
42"		70.0	80.0	80.0	90.0	80.0	90.0
49"		70.0	80.0	80.0	90.0	80.0	90.0
53–1/8"		–	–	–	–	80.0	90.0
19–1/8"	74–1/4" (7)	70.0	80.0	80.0	90.0	80.0	90.0
26–1/2"		70.0	80.0	80.0	90.0	80.0	90.0
37"		70.0	80.0	80.0	90.0	80.0	90.0
42"		70.0	80.0	80.0	90.0	80.0	90.0
49"		–	–	–	–	80.0	90.0
53–1/8"		–	–	–	–	80.0	90.0
19–1/8"	80" (7)	–	–	–	–	80.0	90.0
26–1/2"		–	–	–	–	80.0	90.0
37"		–	–	–	–	80.0	90.0
42"		–	–	–	–	80.0	90.0
49"		–	–	–	–	80.0	90.0

* NO. IN PARENTHESIS INDICATE NO. OF ANCHORS PER JAMB.
LIMIT EXTERIOR(+) LOADS TO 70.0 PSF FOR STD. SILL.

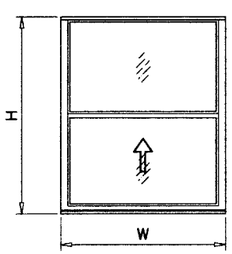

UNEQUAL LITES (ORIEL TYPES) WINDOWS
DESIGN LOAD CAPACITY – PSF (HI-RISE SILL)

WINDOW DIMS.		STANDARD TOP RAIL				HEAVY DUTY TOP RAIL	
		GLASS TYPE 'A'		GLASS TYPES 'B', 'C', 'D' & 'E'		GLASS TYPES 'B', 'C', 'D' & 'E'	
WIDTH	HEIGHT	EXT.(+)	1NT.(–)	EXT.(+)	1NT.(–)	EXT.(+)	1NT.(–)
19–1/8"	50–5/8" (5)	70.0	80.0	80.0	90.0	80.0	90.0
26–1/2"		70.0	80.0	80.0	90.0	80.0	90.0
37"		70.0	80.0	80.0	90.0	80.0	90.0
42"		70.0	80.0	80.0	90.0	80.0	90.0
49"		70.0	80.0	80.0	90.0	80.0	90.0
53–1/8"		70.0	74.0	80.0	90.0	80.0	90.0
19–1/8"	58" (5)	70.0	80.0	80.0	90.0	80.0	90.0
26–1/2"		70.0	80.0	80.0	90.0	80.0	90.0
37"		70.0	80.0	80.0	90.0	80.0	90.0
42"		70.0	80.0	80.0	90.0	80.0	90.0
49"		–	–	–	–	80.0	90.0
19–1/8"	63" (6)	70.0	80.0	80.0	90.0	80.0	90.0
26–1/2"		70.0	80.0	80.0	90.0	80.0	90.0
37"		70.0	80.0	80.0	90.0	80.0	90.0
42"		–	–	–	–	80.0	90.0
19–1/8"	68" (6)	70.0	80.0	80.0	90.0	80.0	90.0
26–1/2"		70.0	80.0	80.0	90.0	80.0	90.0
37"		–	–	–	–	80.0	90.0
19–1/8"	74–1/4" (7)	70.0	80.0	80.0	90.0	80.0	90.0
26–1/2"		70.0	80.0	80.0	90.0	80.0	90.0

* NO. IN PARENTHESIS INDICATE NO. OF ANCHORS PER JAMB.
LIMIT EXTERIOR(+) LOADS TO 70.0 PSF FOR STD. SILL.

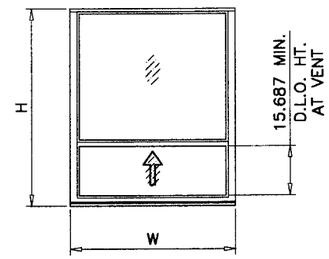

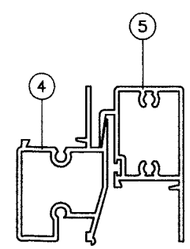

STD. TOP RAIL

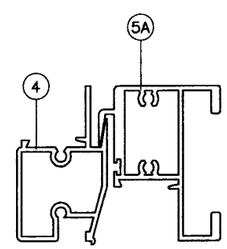

HEAVY DUTY TOP RAIL

NOTE:
GLASS CAPACITIES ON THIS SHEET ARE BASED ON ASTM E1300–02/04 (3 SEC. GUSTS) AND FLORIDA BUILDING COMMISSION DECLARATORY STATEMENT DCA05–DEC–219

Engr: DR. HUMAYOUN FAROOQ
STRUCTURES
FLA. PE # 16557
C.A.N. 3538

JUN 03 2008

PRODUCT REVISED
as complying with the Florida Building Code
Acceptance No. 08-0527.12
Expiration Date NOV. 6, 2013
By Manuel Perez
Miami-Dade Product Control Division

AL-FAROOQ CORPORATION
ENGINEERS & PRODUCT DEVELOPMENT
1235 S.W. 87 AVE
MIAMI, FLORIDA 33174
TEL. (305) 264-8100 FAX. (305) 262-6978
COMP–ANL\W03–56ESW

SERIES–1000 ALUM SINGLE HUNG WINDOW (L.M.I.)

E.S. WINDOWS
5220 N.W. 72 AVE. BAY #4
MIAMI, FL. 33166
TEL. (305) 640–9857 FAX. (305) 593–2074

revisions:

no	date	by	description
B	07.11.05		GENERAL REV.
C	08.03.05		REV. PER BCCO COMMENTS
D	11.10.05		CHART REV.
E	03.03.06		NO CHANGE THIS SHEET
F	04.23.08		GENERAL REVISION

date: 07–31–03
scale: 1/2" = 1"
dr. by: HAMID
chk. by:

drawing no. W03–56

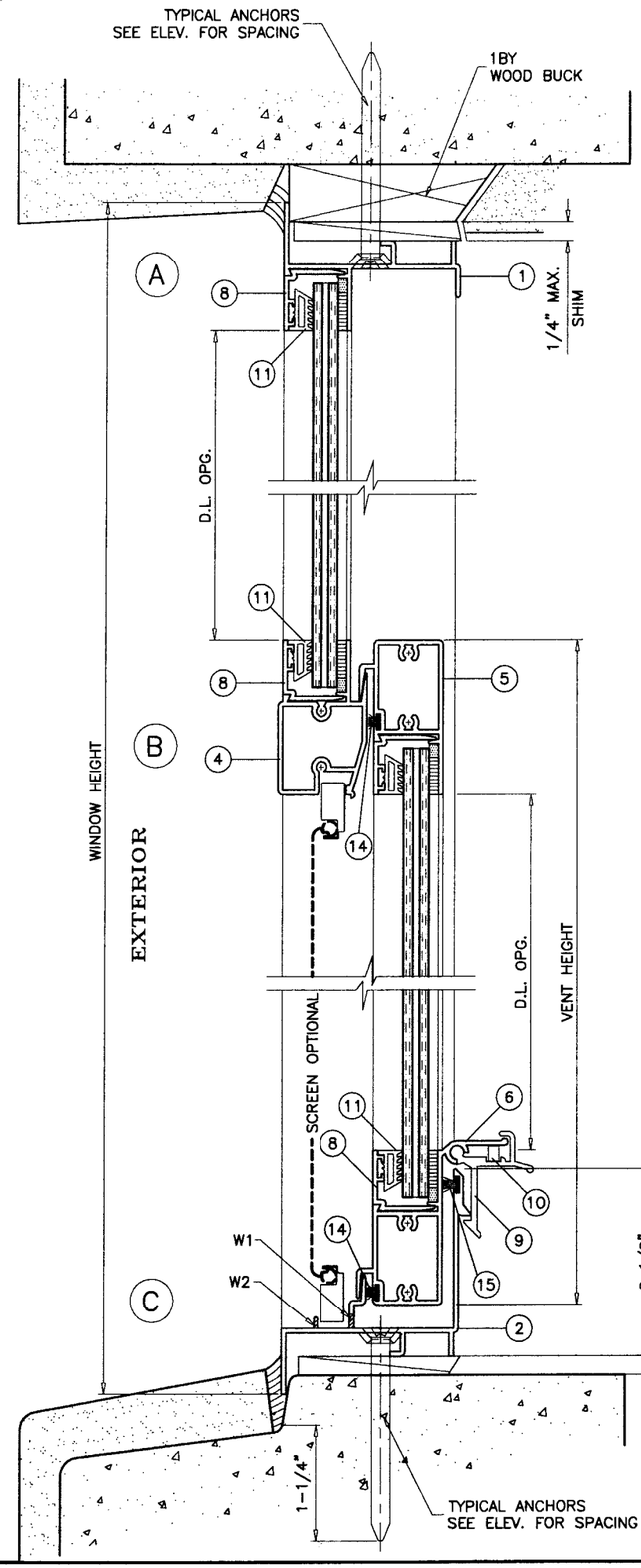

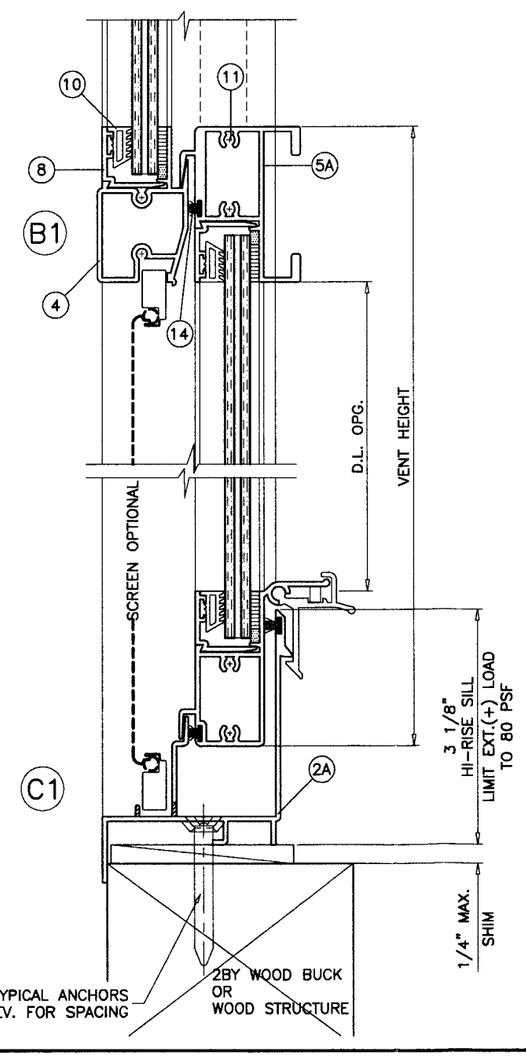

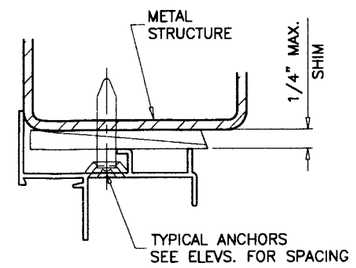

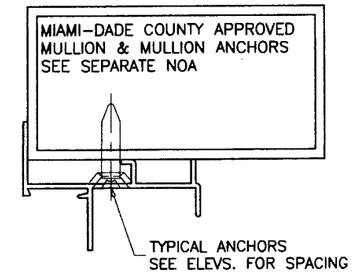

WOOD BUCKS AND METAL STRUCTURE NOT BY E.S. WINDOWS MUST SUSTAIN LOADS IMPOSED BY GLAZING SYSTEM AND TRANSFER THEM TO THE BUILDING STRUCTURE.

TYPICAL ANCHORS: SEE ELEV. FOR SPACING

1/4" TAPCONS

INTO 2BY WOOD BUCKS OR WOOD STRUCTURES
1-3/8" MIN. PENETRATION INTO WOOD

THRU 1BY BUCKS INTO CONC. OR MASONRY
1-1/4" MIN. EMBED INTO CONC. OR MASONRY

DIRECTLY INTO CONC. OR MASONRY
1-1/4" MIN. EMBED INTO CONC. OR MASONRY

#14 SMS OR SELF DRILLING SCREWS

INTO DADE COUNTY APPROVED MULLIONS (MIN. THK. = .090")
INTO METAL STRUCTURES

STEEL : 12 GA. MIN. (Fy = 36 KSI MIN.)
ALUMINUM : 1/8" THK. MIN. (6063-T5 MIN.)
(STEEL IN CONTACT WITH ALUMINUM TO BE PLATED OR PAINTED)

TYPICAL EDGE DISTANCE

INTO CONCRETE AND MASONRY = 2-1/2" MIN.
INTO WOOD STRUCTURE = 3/4" MIN.
INTO METAL STRUCTURE = 3/4" MIN.

SEALANT:

ALL JOINTS AND FRAME CONNECTIONS SEALED WITH SCHNEE MOREHEAD SEAM SEALER SM5504.

WEEPHOLES:

W1 = 1-1/2" X 3/16" WEEPHOLES AT 4" FROM EACH END
W2 = 1-5/16" NOTCH AT EACH END

Engr: DR. HUMAYOUN FAROOQ
STRUCTURES
FLA. PE # 16557
C.A.N. 3538

JUN 0 3 2008

PRODUCT REVISED
as complying with the Florida Building Code
Acceptance No. 08-0527.12
Expiration Date NOV. 6, 2013
By
Miami Dade Product Control Division

AL-FAROOQ CORPORATION
ENGINEERS & PRODUCT DEVELOPMENT
1235 S.W. 87 AVE
MIAMI, FLORIDA 33174
TEL. (305) 264-8100 FAX. (305) 262-6978

COMP-ANL\W03-56ESW

SERIES-1000 ALUM SINGLE HUNG WINDOW (L.M.I.)

E.S. WINDOWS
5220 N.W. 72 AVE. BAY #4
MIAMI, FL. 33166
TEL. (305) 640-9857 FAX. (305) 593-2074

revisions:

no	date	by	description
B	07.11.05		GENERAL REV.
C	08.03.05		REV. PER BCCO COMMENTS
D	11.10.05		CHART REV.
E	03.03.06		NO CHANGE THIS SHEET
F	04.23.08		GENERAL REVISION

date: 07-31-03
scale: 1/2" = 1"
dr. by: HAMID
chk. by:

drawing no.
W03-56

sheet 3 of 6

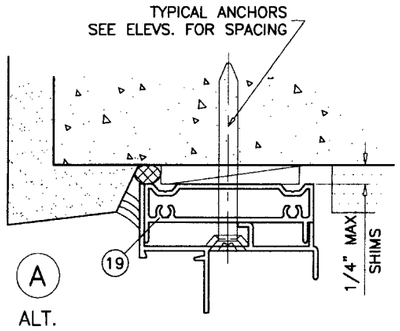

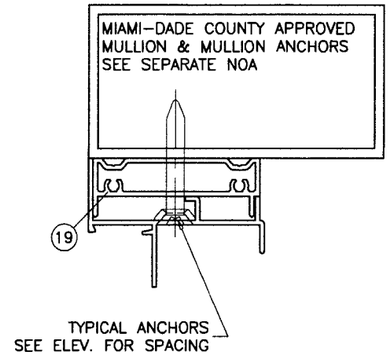

ITEM #	PART #	REQD.	DESCRIPTION	MATERIAL	MANF./SUPPLIER/REMARKS
1	ES1001-1	1	FRAME HEAD	6063-T5	-
2	ES1002-1	1	FRAME SILL (STD.)	6063-T5	-
2A	ES1101	1	FRAME SILL (HI-RISE)	6063-T5	-
3	ES1003	2	FRAME JAMB	6063-T5	-
4	ES1005-1	1	FIXED MTG. RAIL	6063-T6	-
5	ES1004-1	1	STD. VENT TOP RAIL	6063-T6	-
5A	ES2004	1	HEAVY DUTY VENT TOP RAIL	6063-T6	-
6	ES1006-1	1	VENT BOTTOM RAIL	6063-T6	-
7	ES1007-1	2	VENT SIDE RAIL	6063-T5	-
8	ES1008-1	AS RQD.	GLAZING BEAD	6063-T6	-
9	ES1009-1	2/VENT	VENT LATCH @ 6" FROM ENDS	6063-T5	-
10	ES1012	1/LATCH	LATCH SPRING	ST. STEEL	-
11	ES1010	AS REQD.	GLAZING WEDGE	SOFT PVC	-
12	#8 X 1"	20	FRAME & VENT ASSEMBLY SCREWS	CRS	PH SMS
13	ES1011	2/VENT	SASH CAM	CELCON	-
14	43620-187	AS REQD.	PILE W'STRIPPING WITH PLASTIC FIN	-	AMESBURY OR EQUIV.
15	43628-187	AS REQD.	PILE W'STRIPPING WITH PLASTIC FIN	-	AMESBURY OR EQUIV.
16	-	2/ VENT	BLOCK & TACKLE BALANCE		SERIES 120 BY BSI
17	-	2/ VENT	SPIRAL BALANCE	-	-
18	ES1013-1	2	SASH STOP	-	-
19	ES1505	-	FLUSH FRAME ADAPTER	6063-T5	OPTIONAL
20	-	1	5/16" BOX SCREEN	-	OPTIONAL

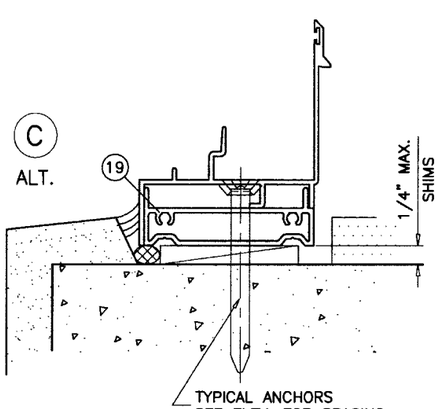

Engr: DR. HUMAYOUN FAROOQ
STRUCTURES
FLA. PE # 16557
C.A.N. 3538

JUN 0 3 2008

PRODUCT REVISED
as complying with the Florida
Building Code
Acceptance No. 08-0527.12
Expiration Date NOV. 6, 2013
By Manuel Perez
Miami-Dade Product Control
Division

AL-FAROOQ CORPORATION
ENGINEERS & PRODUCT DEVELOPMENT
1235 S.W. 87 AVE
MIAMI, FLORIDA 33174
TEL. (305) 264-8100 FAX. (305) 262-6978
COMP-ANL\W03-56ESW

SERIES-1000 ALUM SINGLE HUNG WINDOW (L.M.I.)

E.S. WINDOWS
5220 N.W. 72 AVE. BAY #4
MIAMI, FL. 33166
TEL. (305) 640-9857 FAX. (305) 593-2074

revisions:

no	date	by	description
B	07.11.05		GENERAL REV.
C	08.03.05		NO CHANGE THIS SHEET
D	11.10.05		ANCHOR EMBED REV.
E	03.03.06		FRAME ADAPTER ADDED
F	04.23.08		GENERAL REVISION

date: 07-31-03
scale: 1/2" = 1"
dr. by: HAMID
chk. by:

drawing no.
W03-56

sheet 4 of 6

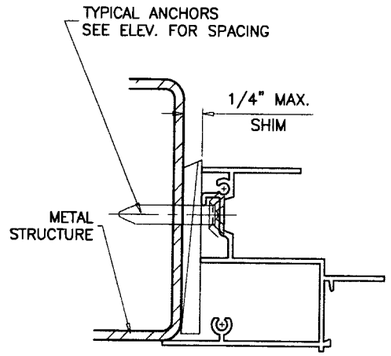

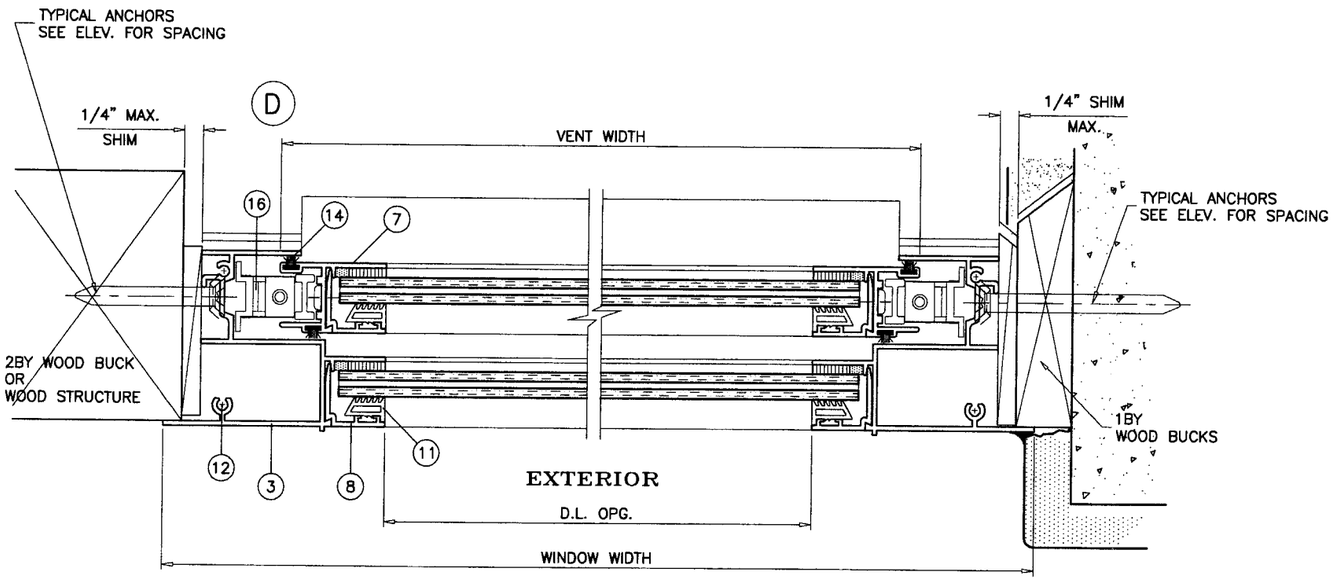

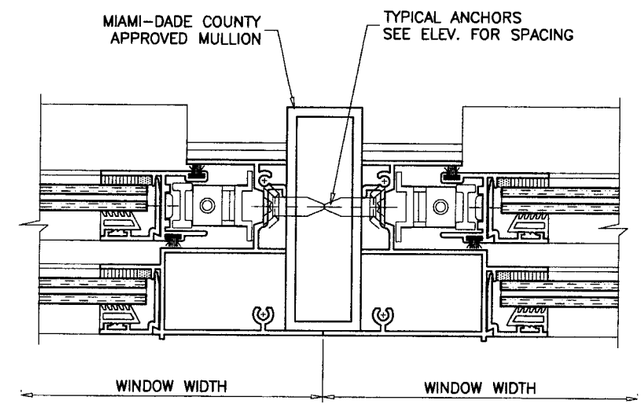

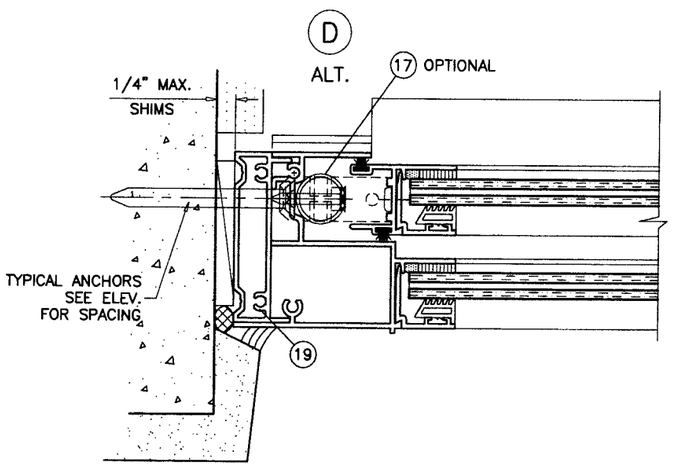

Engr: DR. HUMAYOUN FAROOQ
STRUCTURES
FLA. PE # 16557
C.A.N. 3538

JUN 0 3 2008

PRODUCT REVISED
as complying with the Florida
Building Code
Acceptance No. 08-0527.12
Expiration Date NOV. 6, 2013
By Manuel Perez
Miami-Dade Product Control
Division

AL-FAROOQ CORPORATION
ENGINEERS & PRODUCT DEVELOPMENT
1235 S.W. 87 AVE
MIAMI, FLORIDA 33174
TEL. (305) 264-8100 FAX. (305) 262-6978
COMP-ANL\W03-56ESW

SERIES-1000 ALUM SINGLE HUNG WINDOW (L.M.I.)

E.S. WINDOWS
5220 N.W. 72 AVE. BAY #4
MIAMI, FL. 33166
TEL. (305) 640-9857 FAX. (305) 593-2074

revisions:

no	date	by	description
B	07.11.05		GENERAL REV.
C	08.03.05		NO CHANGE THIS SHEET
D	11.10.05		NO CHANGE THIS SHEET
E	03.03.06		FRAME ADAPTER ADDED
F	04.23.08		GENERAL REVISION

date: 07-31-03
scale: 1/2" = 1"
dr. by: HAMID
chk. by:

drawing no.
W03-56

sheet 5 of 6

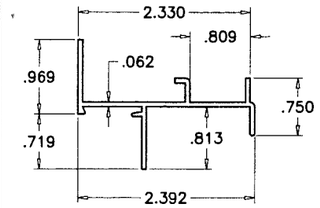

1 FRAME HEAD

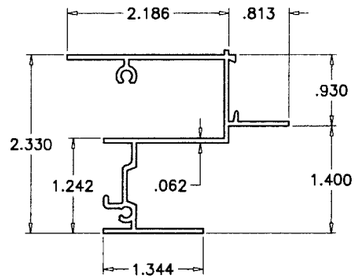

3 FRAME JAMB

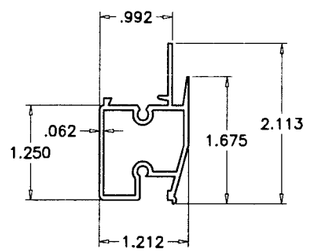

4 MEETING RAIL

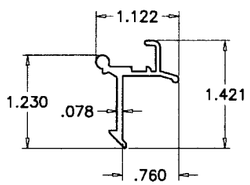

9 VENT LATCH

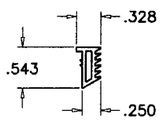

11 GLAZING WEDGE

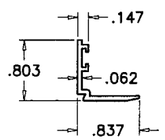

8 GLAZING BEAD

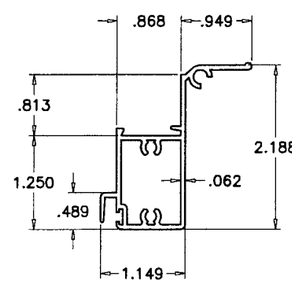

6 VENT BOTTOM RAIL

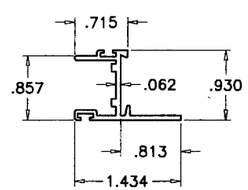

7 VENT SIDE RAIL

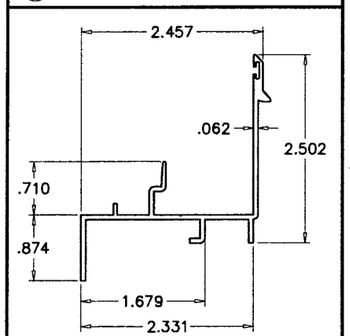

2 FRAME SILL (STD.)

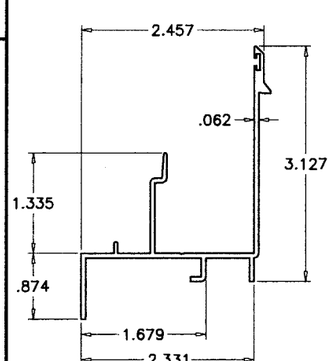

2A FRAME SILL (HI-RISE)

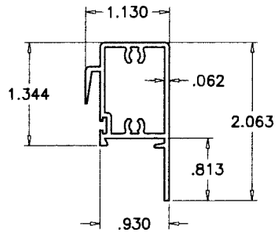

5 STD. VENT TOP RAIL

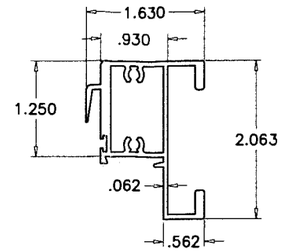

5A H.D. VENT TOP RAIL

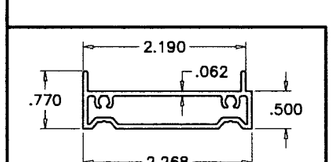

19 FLUSH FRAME ADAPTER

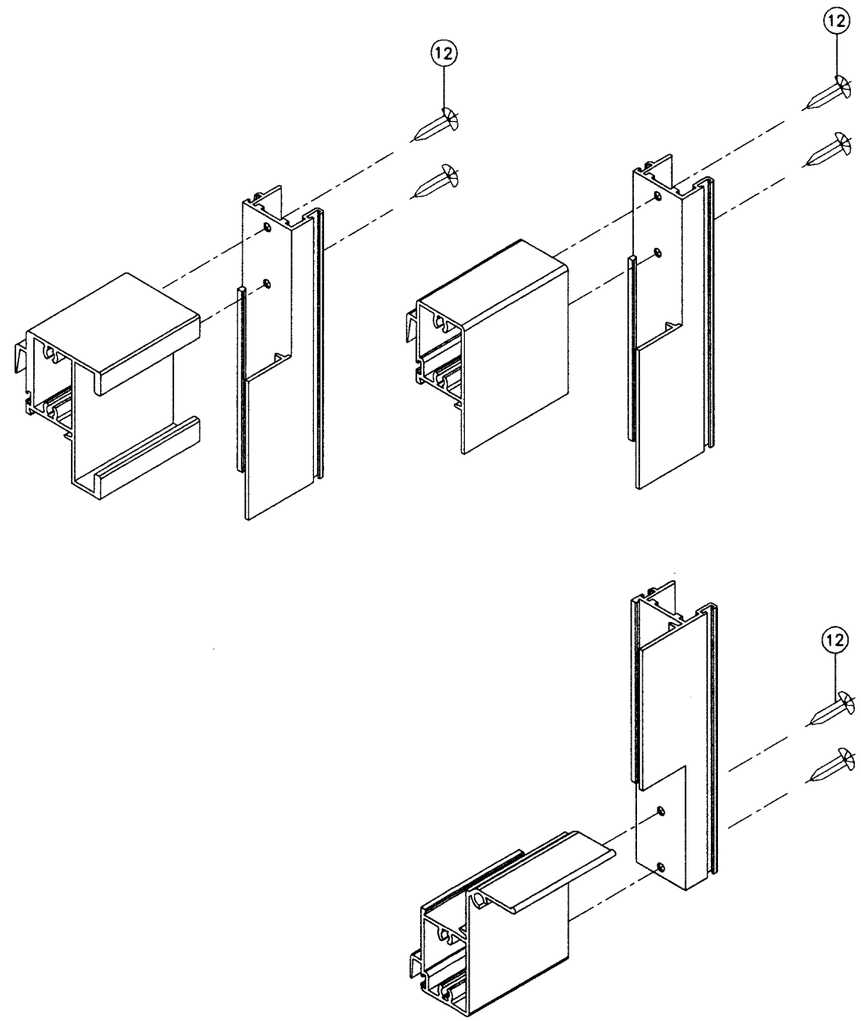

VENT CORNER DETAIL

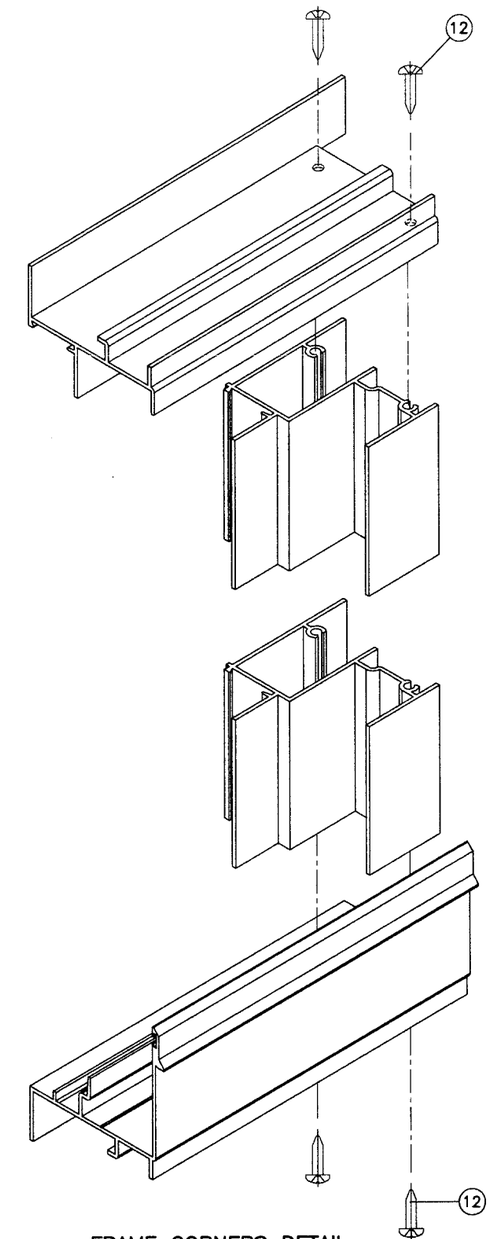

FRAME CORNERS DETAIL

Engr: DR. HUMAYOUN FAROOQ
STRUCTURES
FLA. PE # 16557
C.A.N. 3538

JUN 0 3 2008

PRODUCT REVISED
as complying with the Florida
Building Code
Acceptance No. 08-0527.12
Expiration Date NOV. 6, 2013
By Manuel Perez
Miami Dade Product Control
Division

AL-FAROOQ CORPORATION
ENGINEERS & PRODUCT DEVELOPMENT
1235 S.W. 87 AVE
MIAMI, FLORIDA 33174
TEL. (305) 264-8100 FAX. (305) 262-6978
COMP-ANL\W03-56ESW

SERIES-1000 ALUM SINGLE HUNG WINDOW (L.M.I.)

E.S. WINDOWS
5220 N.W. 72 AVE. BAY #4
MIAMI, FL. 33166
TEL. (305) 640-9857 FAX. (305) 593-2074

revisions:

no	date	by	description
B	07.11.05		GENERAL REV.
C	08.03.05		NO CHANGE THIS SHEET
D	11.10.05		NO CHANGE THIS SHEET
E	03.03.06		FRAME ADAPTER ADDED
F	04.23.08		GENERAL REVISION

date: 07-31-03
scale: 1/2" = 1"
dr. by: HAMID
chk. by:

drawing no.
W03-56

sheet 6 of 6