MIAMI-DADE COUNTY
BUILDING CODE COMPLIANCE OFFICE (BCCO)
PRODUCT CONTROL DIVISION

MIAMI-DADE COUNTY, FLORIDA
METRO-DADE FLAGLER BUILDING
140 WEST FLAGLER STREET, SUITE 1603
MIAMI, FLORIDA 33130-1563
(305) 375-2901 FAX (305) 372-6339
www.maimidade.gov/buildingcode

NOTICE OF ACCEPTANCE (NOA)

Traco Security Windows & Doors, Inc.
71 Progress Avenue
Cranberry Township, PA 16066

SCOPE:

This NOA is being issued under the applicable rules and regulations governing the use of construction materials. The documentation submitted has been reviewed by Miami-Dade County Product Control Division and accepted by the Board of Rules and Appeals (BORA) to be used in Miami Dade County and other areas where allowed by the Authority Having Jurisdiction (AHJ).

This NOA shall not be valid after the expiration date stated below. The Miami-Dade County Product Control Division (In Miami Dade County) and/or the AHJ (in areas other than Miami Dade County) reserve the right to have this product or material tested for quality assurance purposes. If this product or material fails to perform in the accepted manner, the manufacturer will incur the expense of such testing and the AHJ may immediately revoke, modify, or suspend the use of such product or material within their jurisdiction. BORA reserves the right to revoke this acceptance, if it is determined by Miami-Dade County Product Control Division that this product or material fails to meet the requirements of the applicable building code.

This product is approved as described herein, and has been designed to comply with the Florida Building Code, including the High Velocity Hurricane Zone.

DESCRIPTION: Series "2100" Aluminum Single Hung Window – N. I.

APPROVAL DOCUMENT: Drawing No. **04-113-0002**, titled "Series 2100 Aluminum Single - Hung Window Non-Impact Resistant", sheets 1 through 4 of 4, dated 04/21/2004 with latest revision 05/15/2008, prepared by Engineer Express, dated 07/17/2008, signed and sealed by Frank L. Bennardo, P.E., bearing the Miami-Dade County Product Control Revision stamp with the Notice of Acceptance number and expiration date by the Miami-Dade County Product Control Division.

MISSILE IMPACT RATING: None.

LIMITATIONS: Miami-Dade County Product Control Approved Shutters Are Required.

LABELING: Each unit shall bear a permanent label with the manufacturer's name:

TRACO	**TRACO**	**Security (TRACO)**
71 Progress Avenue	**2304 Silverdale Road**	**5100 N.W. 72nd Avenue**
Cranberry Township, PA 16066	**Johnson City, TN 37601**	**Miami, FL 33166**

and following statement: "Miami-Dade County Product Control Approved", unless otherwise noted herein.

RENEWAL of this NOA shall be considered after a renewal application has been filed and there has been no change in the applicable building code negatively affecting the performance of this product.

TERMINATION of this NOA will occur after the expiration date or if there has been a revision or change in the materials, use, and/or manufacture of the product or process. Misuse of this NOA as an endorsement of any product, for sales, advertising or any other purposes shall automatically terminate this NOA. Failure to comply with any section of this NOA shall be cause for termination and removal of NOA.

ADVERTISEMENT: The NOA number preceded by the words Miami-Dade County, Florida, and followed by the expiration date may be displayed in advertising literature. If any portion of the NOA is displayed, then it shall be done in its entirety.

INSPECTION: A copy of this entire NOA shall be provided to the user by the manufacturer or its distributors and shall be available for inspection at the job site at the request of the Building Official.

This NOA **revises and renews NOA # 07-0521.06** and consists of this page 1 and evidence pages E-1, E-2 and E-3, as well as approval document mentioned above.

The submitted documentation was reviewed by **Jaime D. Gasçon, P.E.**

MIAMI-DADE COUNTY APPROVED

JGASCON 7/30/08

NOA No. 08-0527.15
Expiration Date: July 11, 2012
Approval Date: August 21, 2008

Traco Security Windows & Doors, Inc.

NOTICE OF ACCEPTANCE: EVIDENCE SUBMITTED

A. DRAWINGS

1. Manufacturer's die drawings and sections.
2. Drawing No **04-113-0002**, titled "Series 2100 Aluminum Single - Hung Window Non-Impact Resistant", sheets 1 through 4 of 4, dated 04/21/2004 with latest revision 05/15/2008, prepared by Engineer Express, dated 07/17/2008, signed and sealed by Frank L. Bennardo, P.E.

B. TESTS

1. Test reports on: 1) Air Infiltration Test, per FBC, TAS 202-94
   2) Uniform Static Air Pressure Test, Loading per FBC TAS 202-94
   3) Water Resistance Test, per FBC, TAS 202-94
   4) Forced Entry Test, per FBC 2411 3.2.1, TAS 202-94

   Along with marked-up drawings and installation diagram of Series 2100 Aluminum Single Hung Window, prepared by Farabaugh Engineering and Testing, Inc., Test Report No. **FET T150-08**, dated 04/09/08, signed and sealed by Daniel G. Farabaugh, P.E.
2. Test reports on: 1) Air Infiltration Test, per FBC, TAS 202-94
   2) Uniform Static Air Pressure Test, Loading per FBC, TAS 202-94
   3) Water Resistance Test, per FBC, TAS 202-94

   Along with marked-up drawings and installation diagram of Series 2100 Aluminum Single Hung Window, prepared by Farabaugh Engineering and Testing, Inc., Test Report No. **FET-04002**, dated 03/15/04, signed and sealed by Daniel G. Farabaugh, P.E.

   "Submitted under NOA# 05-0729.03"
3. Test report on:
   1) Uniform Static Air Pressure Test, Loading per PA 202-94

   Along with marked-up drawings and installation diagram of Series 2100 Aluminum Single Hung Window, prepared by Fenestration Testing Laboratory, Inc., Test Report No. **FTL-1616**, dated 04/02/97, signed and sealed by Gilbert Diamond, P.E.

   "Submitted under NOA# 99-0712.05"
4. Test reports on: 1) Air Infiltration Test, per PA 202-94
   2) Uniform Static Air Pressure Test, Loading per PA 202-94
   3) Water Resistance Test, per PA 202-94
   4) Forced Entry Test, per PA 202-94

   Along with marked-up drawings and installation diagram of Series 2100 Aluminum Single Hung Window, prepared by Fenestration Testing, Inc., Test Report No. **FTL-1305**, dated 10/09/95, signed and sealed by Gilbert Diamond, P.E.

   "Submitted under NOA# 97-0924.03"

Jaime D. Gasçon, P.E.
Chief, Product Control Division
NOA No. 08-0527.15
Expiration Date: July 11, 2012
Approval Date: August 21, 2008

B. TESTS (CONTINUED)

5. Test reports on: 1) Air Infiltration Test, per PA 202-94
2) Uniform Static Air Pressure Test, Loading per PA 202-94
3) Water Resistance Test, per PA 202-94
4) Forced Entry Test, per PA 202-94

Along with marked-up drawings and installation diagram of Series 2100 Aluminum Single Hung Window, prepared by Fenestration Testing Laboratory, Test Report No. **FTL-1274**, dated 09/27/95, signed and sealed by Yamil Gerardo Kuri, P.E.
"Submitted under NOA# 97-0924.03"

C. CALCULATIONS

1. Anchor verification calculations and structural analysis, complying with FBC-2004, prepared by Engineer Express, dated 05/15/08 with latest revision 07/24/08, signed and sealed by Frank L. Bennardo, P. E.
Complies with ASTM E1300-02

D. QUALITY ASSURANCE

1. Miami Dade Building Code Compliance Office (BCCO).

E. MATERIAL CERTIFICATIONS

1. None.

F. STATEMENTS

1. Statement letter of conformance, dated May 16, 2008, signed and sealed by Frank L. Bennardo, P.E.

2. Statement letter of no financial interest, dated May 22, 2008, signed and sealed by Frank L. Bennardo, P.E.

3. Laboratory compliance letter for Test Report no. **FET T150-08**, issued by Farabaugh Engineering and Testing, Inc., dated 04/09/08, signed and sealed by Daniel G. Farabaugh, P.E.

4. Testing agreement letter, dated 10/08/2007 between Farabaugh Engineering and Testing, Inc. (FET) and Traco Security Windows & Doors, Inc., issued by FET.
"Submitted under NOA# 07-0521.06"

5. Laboratory compliance letter for Test Report no. **FET 04002**, issued by Farabaugh Engineering and Testing, Inc., dated 03/15/04, signed and sealed by Daniel G. Farabaugh, P.E.
"Submitted under NOA# 05-0729.03"

Jaime D. Gasçon, P.E.
Chief, Product Control Division
NOA No. 08-0527.15
Expiration Date: July 11, 2012
Approval Date: August 21, 2008

G. STATEMENTS (CONTINUED)

6. Laboratory compliance letter for Test Report no. **FTL-1616,** issued by Fenestration Testing Laboratory, Inc., dated 04/02/97, signed and sealed by Gilbert Diamond, P.E.
   "Submitted under NOA# 99-0712.05"
7. Laboratory compliance letter for Test Report no. **FTL-1305,** issued by Fenestration Testing Laboratory, Inc., dated 10/09/95, signed and sealed by Gilbert Diamond, P.E.
   "Submitted under NOA# 97-0924.03"
8. Laboratory compliance letter for Test Report no. **FTL-1274,** issued by Fenestration Testing Laboratory, Inc., dated 09/27/95, signed and sealed by Yamil Gerardo Kuri, P.E.
   "Submitted under NOA# 97-0924.03"

G. OTHERS

1. Notice of Acceptance No. **07-0521.06**, issued to Traco Security Windows & Doors, Inc. for their Series "**2100" Aluminum Single Hung Window – N. I.**", approved on 06/28/07 and expiring on 07/11/08.
2. One year conditional approval dated 06/28/07, subjected to successful verification test, the final approval will be balanced of total 5 years.
   "Submitted under NOA# 07-0521.06"

Jaime D. Gasçon, P.E.
Chief, Product Control Division
NOA No. 08-0527.15
Expiration Date: July 11, 2012
Approval Date: August 21, 2008

SERIES 2100 SINGLE-HUNG WINDOW (NON-IMPACT RESISTANT)

WINDOW WIDTH (in)	WINDOW HEIGHT (in)	THRU-FRAME ANCHORAGE						NAIL FIN ANCHORAGE					
		1/8" DSB Ann 3/16" TAPCONS		3/16" Ann 3/16" TAPCONS		3/16" Temp 3/16" TAPCONS		1/8" DSB Ann 3/16" TAPCONS		3/16" Ann 3/16" TAPCONS		3/16" Temp 3/16" TAPCONS	
		Pos (psf)	Neg (psf)	Pos (psf)	Neg (psf)	Pos (psf)	Neg (psf)	Pos (psf)	Neg (psf)	Pos (psf)	Neg (psf)	Pos (psf)	Neg (psf)
		6 Anchors / Jamb		6 Anchors / Jamb		6 Anchors / Jamb		5 Anchors / Jamb		5 Anchors / Jamb		5 Anchors / Jamb	
19.125	26.00	63.33	209.00	80.00	209.00	80.00	209.00	45.00	115.08	45.00	115.08	45.00	209.00
26.50		63.33	150.10	80.00	209.00	80.00	209.00	45.00	72.65	45.00	72.65	45.00	190.25
37.00		63.33	98.43	80.00	161.81	80.00	161.81	45.00	47.64	45.00	47.64	45.00	124.75
53.125		35.06	35.06	80.00	105.85	80.00	105.85	31.16	31.16	31.16	31.16	45.00	81.61
		6 Anchors / Jamb		6 Anchors / Jamb		6 Anchors / Jamb		7 Anchors / Jamb		7 Anchors / Jamb		7 Anchors / Jamb	
19.125	38.375	63.33	178.00	80.00	183.43	80.00	183.43	45.00	103.28	45.00	103.28	45.00	209.00
26.50		63.33	120.31	80.00	184.62	80.00	184.62	45.00	58.23	45.00	58.23	45.00	152.49
37.00		63.33	74.21	80.00	122.00	80.00	122.00	35.92	35.92	35.92	35.92	45.00	94.06
53.125		24.45	24.45	76.81	76.81	76.81	76.81	22.61	22.61	22.61	22.61	45.00	59.22
		8 Anchors / Jamb		8 Anchors / Jamb		8 Anchors / Jamb		7 Anchors / Jamb		7 Anchors / Jamb		7 Anchors / Jamb	
19.125	50.625	63.33	127.00	80.00	162.00	80.00	162.00	45.00	103.28	45.00	103.28	45.00	151.02
26.50		63.33	94.80	80.00	175.00	80.00	183.09	45.00	53.90	45.00	53.90	45.00	141.16
37.00		63.33	63.33	80.00	104.12	80.00	104.12	30.65	30.65	30.65	30.65	45.00	80.27
53.125		19.29	19.29	62.63	62.63	62.63	62.63	18.44	18.44	18.44	18.44	45.00	48.29
		8 Anchors / Jamb		8 Anchors / Jamb		8 Anchors / Jamb		7 Anchors / Jamb		7 Anchors / Jamb		7 Anchors / Jamb	
19.125	57.00	63.33	107.00	80.00	125.52	80.00	125.52	45.00	103.28	45.00	103.28	45.00	117.01
26.50		63.33	87.00	80.00	148.69	80.00	148.69	45.00	53.79	45.00	53.79	45.00	138.61
37.00		59.18	59.18	80.00	98.95	80.00	98.95	29.13	29.13	29.13	29.13	45.00	76.29
53.125		17.58	17.58	57.91	57.91	57.91	57.91	17.05	17.05	17.05	17.05	44.65	44.65
		8 Anchors / Jamb		8 Anchors / Jamb		8 Anchors / Jamb		9 Anchors / Jamb		9 Anchors / Jamb		9 Anchors / Jamb	
19.125	63.00	63.33	91.00	80.00	103.57	80.00	103.57	45.00	91.00	45.00	103.28	45.00	144.83
26.50		63.33	80.50	80.00	110.32	80.00	110.32	45.00	53.79	45.00	53.79	45.00	140.88
37.00		56.64	56.64	80.00	91.50	80.00	95.85	28.22	28.22	28.22	28.22	45.00	73.90
53.125		16.34	16.34	54.49	54.49	54.49	54.49	16.04	16.04	16.04	16.04	42.01	42.01
		10 Anchors / Jamb		10 Anchors / Jamb		10 Anchors / Jamb		9 Anchors / Jamb		9 Anchors / Jamb		9 Anchors / Jamb	
19.125	74.25	63.33	79.30	80.0	117.00	80.00	117.00	45.00	79.30	45.00	103.28	45.00	109.07
26.50		63.33	66.50	80.0	111.00	80.00	111.51	45.00	53.79	45.00	53.79	45.00	103.95
37.00		53.00	53.00	80.0	84.90	80.00	93.73	27.59	27.59	27.59	27.59	45.00	72.26
53.125		14.72	14.72	50.0	50.00	50.00	50.00	14.72	14.72	14.72	14.72	38.55	38.55

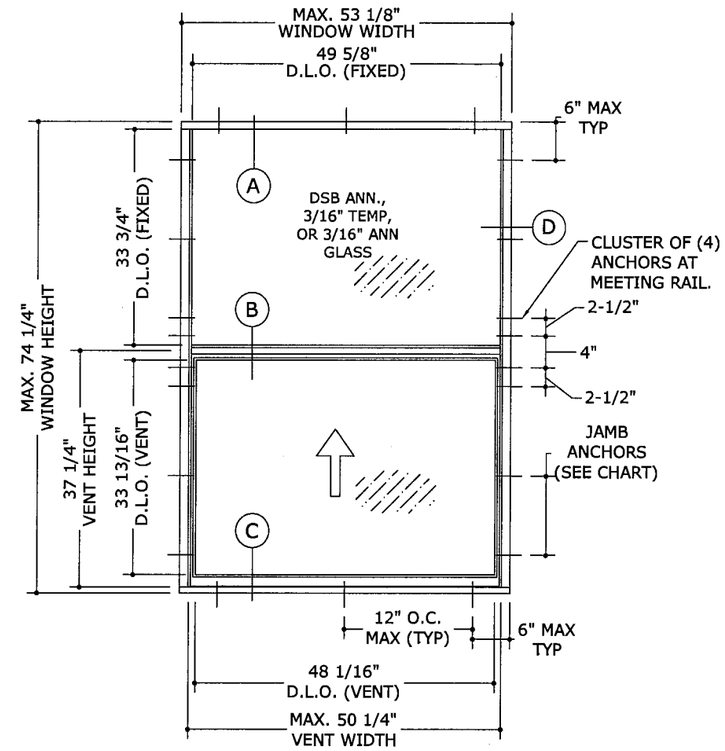

1 / 1 TYPICAL ELEVATION WITH THRU-FRAME ANCHORAGE

1/2" = 1'-0" EXTERIOR ELEV

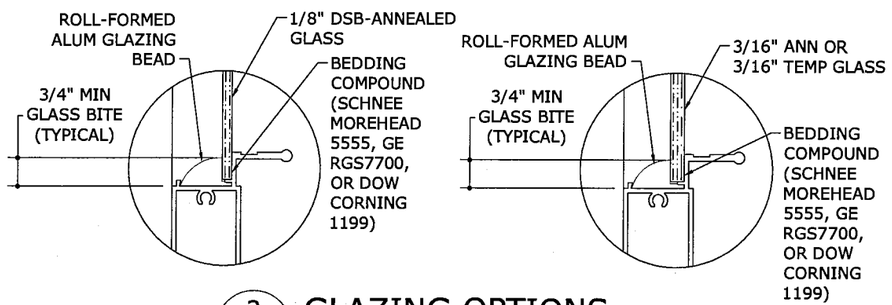

2 / 1 GLAZING OPTIONS

3" = 1'-0" VERT SECTIONS

GENERAL NOTES:

1) THE SYSTEM DESCRIBED HEREIN HAS BEEN DESIGNED AND TESTED IN COMPLIANCE WITH THE 2004 AND 2007 FLORIDA BUILDING CODES (HIGH VELOCITY HURRICANE ZONE) AND HVHZ TEST PROTOCOL TAS 202.
2) NO 33-1/3% INCREASE IN ALLOWABLE STRESS HAS BEEN USED IN THE DESIGN OF THIS SYSTEM. WIND LOAD DURATION FACTOR Cd=1.6 HAS BEEN USED FOR WOOD ANCHOR DESIGN.
3) POSITIVE AND NEGATIVE DESIGN PRESSURES CALCULATED FOR USE WITH THIS SYSTEM SHALL BE DETERMINED BY OTHERS ON A JOB-SPECIFIC BASIS IN ACCORDANCE WITH THE GOVERNING CODE.
4) MULTIPLE WINDOW UNITS MUST BE INSTALLED USING MIAMI-DADE COUNTY BCCO-APPROVED STRUCTURAL MULLIONS.
5) THE WINDOW SYSTEM DETAILED HEREIN IS GENERIC AND DOES NOT PROVIDE INFORMATION FOR A SPECIFIC SITE. FOR SITE CONDITIONS DIFFERENT FROM THE CONDITIONS DETAILED HEREIN, A LICENSED ENGINEER OR REGISTERED ARCHITECT SHALL PREPARE SITE SPECIFIC DOCUMENTS FOR USE IN CONJUNCTION WITH THIS DOCUMENT.
6) PERMIT HOLDER SHALL VERIFY THE ADEQUACY OF THE EXISTING STRUCTURE TO WITHSTAND SUPERIMPOSED LOADS.
7) ALL WINDOWS SHALL BE PROTECTED WITH MIAMI-DADE COUNTY APPROVED IMPACT RESISTANT SHUTTERS FOR ALL INSTALLATIONS.
8) ALL STEEL IN CONTACT WITH ALUMINUM SHALL BE PAINTED OR PLATED IN ACCORDANCE WITH THE BUILDING CODES SPECIFIED ABOVE.

PRODUCT REVISED
as complying with the Florida
Building Code
Acceptance No 08-0527.15
Expiration Date 07/1/2012
By
Miami-Dade Product Control
Division

FRANK L. BENNARDO, P.E.
PE0046549
07/17/2008

ENGINEERING EXPRESS®
160 SW 12th AVENUE, #106
DEERFIELD BEACH, FL 33442
PH: (954) 354-0660 FAX: (954) 354-0443
WWW.ENGEXP.COM
CERT OF AUTH #9885
A. FRANK L. BENNARDO, P.E., INC. INNOVATION

TRACO
Windows & Doors Inc.
71 Progress Avenue
Cranberry Township, PA 16166
Tel: (724) 776-7000

SERIES 2100 ALUMINUM SINGLE-HUNG WINDOW
NON-IMPACT RESISTANT

REMARKS	DRWN	CHKD	DATE
INIT ISSUE	CL	FLB	04/21/08
TABLE REVISION	DW	FLB	08/19/08
TABLE REVISION	CL	FLB	10/06/04
2004 FBC	CL	FLB	07/08/05
2007 FBC	RKB	CL	05/15/08

04-113-0002
SCALE: 01
PAGE DESCRIPTION:

1 / 4

07/17/2008 - 5:05pm dangley F:\01 Project Files\Traco (TRA)\2004 Jobs\04-113-0002 2100 Single-Hung (Non-Impact)\04-113-0002_03e Traco - 2100 Single-Hung (Non-Impact).dwg

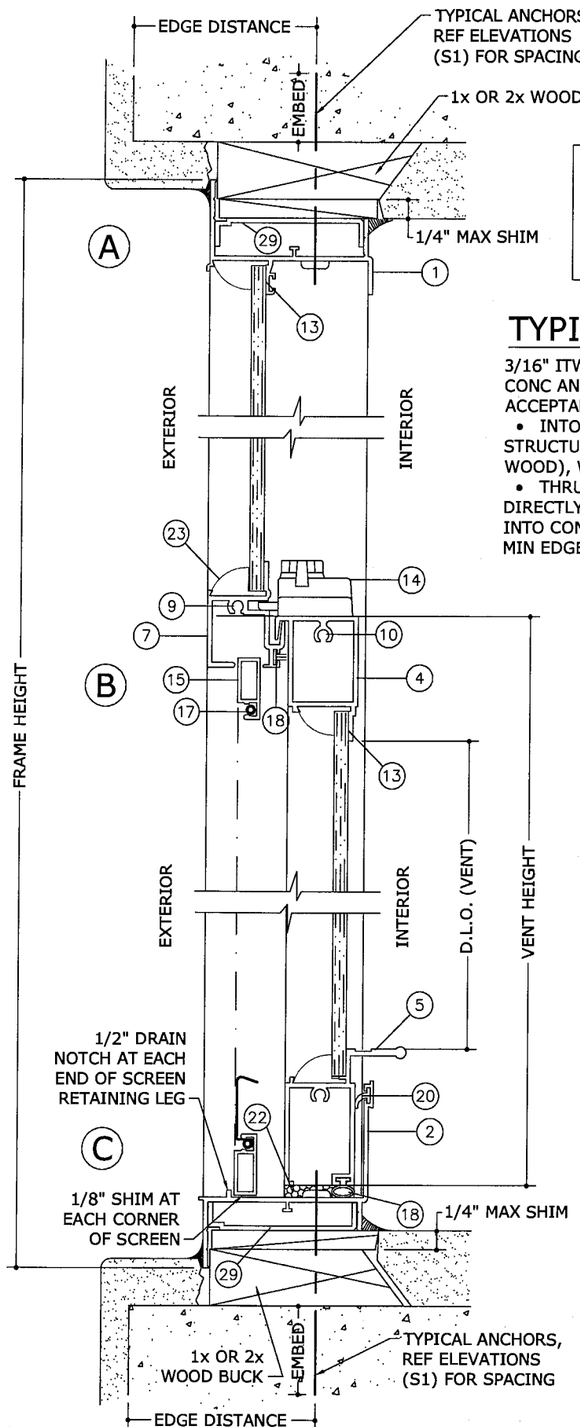

WOOD BUCKS, NOT BY TRACO, MUST SUSTAIN LOADS IMPOSED BY GLAZING SYSTEM AND TRANSFER THEM TO THE BUILDING STRUCTURE.

TYPICAL ANCHORS:

3/16" ITW TAPCONS W/ 3/16" HEAD OR EQUIV CONC ANCHOR HOLDING CURRENT NOTICE OF ACCEPTANCE.

- INTO 2x WOOD BUCKS OR WOOD STRUCTURE (1-1/2" MIN PENETRATION INTO WOOD), WITH 1/2" MIN EDGE DISTANCE
- THRU 1x WOOD BUCKS INTO MASONRY OR DIRECTLY INTO MASONRY (1-1/4" MIN EMBED INTO CONCRETE OR MASONRY), WITH 2-5/8" MIN EDGE DISTANCE.

SEALANT:

ALL FRAME AND VENT CORNERS, AND HEADS OF INSTALLATION SCREWS AT SILL TO BE SEALED WITH WHITE/ALUM COLORED SEALANT, FIXED MEETING RAIL AT ENDS SEALED WITH GE SILICONE.

ANCHOR NOTES:

1) ANCHORS SHALL BE INSTALLED IN ACCORDANCE WITH MANUFACTURERS' RECOMMENDATIONS.
2) WOOD BUCKS (NOT BY THIS MANUFACTURER) SHALL BE ANCHORED PROPERLY TO TRANSFER LOADS TO THE EXISTING STRUCTURE.
3) WOOD BUCKS AND/OR HOST STRUCTURE SHALL BE "SOUTHERN PINE" G=0.55 OR GREATER DENSITY.
4) ANCHORS SHALL BE AS LISTED, SPACED AS SHOWN HEREIN. MINIMUM EDGE DISTANCE AND EMBEDMENT TO BASE STRUCTURE EXCLUDES STUCCO, FOAM, BRICK, AND OTHER WALL FINISHES.
5) WHERE EXISTING STRUCTURE IS WOOD FRAMING, EXISTING CONDITIONS MAY VARY. FIELD VERIFY THAT FASTENERS ARE INTO ADEQUATE WOOD FRAMING MEMBERS.

1/2 SINGLE GLAZED SECTION
6" = 1'-0" VERT. SECT.

MATERIALS LIST

ITEM NO.	PART NUMBER	QUANTITY	DESCRIPTION	MATERIAL	MANF./SUPLIER/REMARKS
1	S-1104	1	HEAD	6063-T5	PROFILE EXTRUSIONS
2	S-1105	1	SILL	6063-T5	PROFILE EXTRUSIONS
3	S-1103	2	JAMB	6063-T5	PROFILE EXTRUSIONS
4	S-1113	1	VENT TOP	6063-T5	PROFILE EXTRUSIONS
5	S-1101	1	VENT BOTTOM	6063-T5	PROFILE EXTRUSIONS
6	S-1112	2	VENT SIDE	6063-T5	PROFILE EXTRUSIONS
7	S-1110	1	MEETING RAIL	6063-T5	PROFILE EXTRUSIONS
8	-	-	-	-	-
9	012-00-830	AS REQD.	FRAME/VENT ASSEMBLY SCREW	-	# 8 X 3/4" SMS
10	012-00-835	AS REQD.	VENT ASSEMBLY SCREW	-	# 8 X 1" SMS
11	047-40-012	4	WOOLPILE VENT SIDE	-	AMESBURY
12	-	-	-	-	-
13	024-00-018	AS REQD.	ACRYLIC BASED GLAZING COMPOUND	-	SCHNEE MOREHEAD 5555
14	007-10-017	2	SWEEP LOCK @ 7" FROM ENDS (WHITE)	ZAMAK	MARBOLLO INTL.
15	30-2979	AS REQD.	ROLL FORMED SCREEN FRAME (WHITE)	-	OPTIONAL
16	30-067X	AS REQD.	FIBERGLASS SCREEN MESH	-	-
17	046-16-005	AS REQD.	SCREEN SPLINE	-	-
18	046-16-010	AS REQD.	BULB WEATHERSTRIPPING	VINYL	TEAM PLASTICS
19	-	-	-	-	-
20	046-16-016	1	FLAP SILL	VINYL	TEAM PLASTICS
21	009-00-XXX-X	1/ JAMB	BLOCK AND TACKLE BALANCE	-	AMESBURY
22	005-10-041	2	CLOSED CELL FOAM PAD	-	1"X2"X1/4" AT EACH CORNER
23	006-10-009	AS REQD.	ROLL FORMED GLAZING BEAD	-	ALUMINUM
24	-	-	-	-	-
25	-	-	-	-	-
26	-	-	-	-	-
27	S-1125	OPTIONAL	APPLIED NAIL FIN	6063-T5	PROFILE EXTRUSIONS
28	S-4740	AS REQD.	JAMB PLATE	6063-T5	PROFILE EXTRUSIONS
29	S-4931	AS REQD.	HEAD AND SILL PLATE	6063-T5	PROFILE EXTRUSIONS

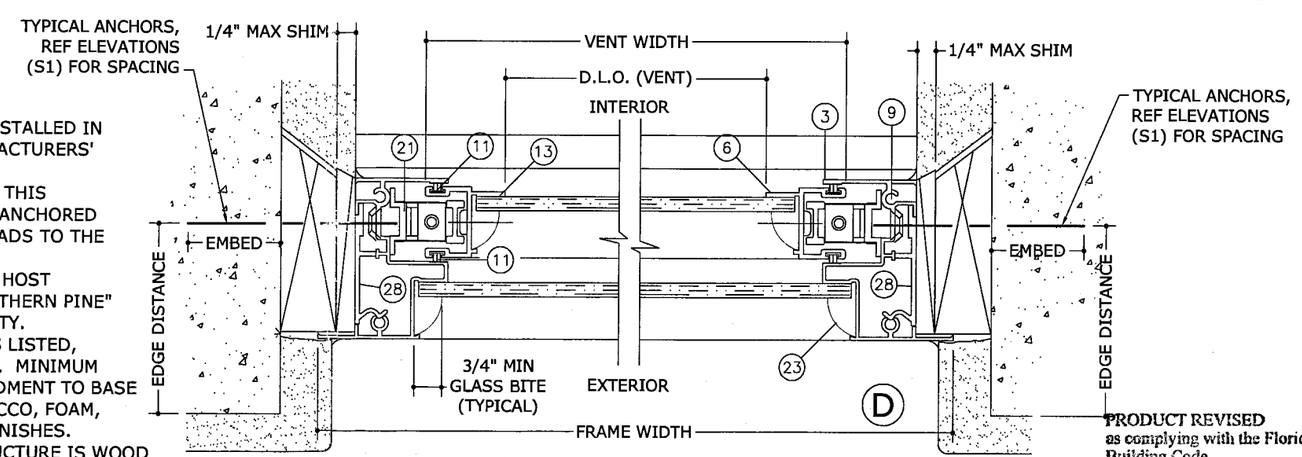

2/2 HORIZONTAL SECTION DETAIL
6" = 1'-0" HORIZ. SECT.

PRODUCT REVISED as complying with the Florida Building Code
Acceptance No 08-0527.15
Expiration Date 07/11/2012
By
Miami Dade Product Control Division

FRANK L. BENNARDO, P.E.
PE0046549
FLB
07/17/2008

ENGINEERING EXPRESS®
160 SW 12th AVENUE, #106
DEERFIELD BEACH, FL 33442
Ph: (954) 354-0660 Fax: (954) 354-0443
WWW.ENGEXP.COM
CERT OF AUTH #9885
A FRANK L. BENNARDO, P.E., INC. INNOVATION

TRACO
Windows & Doors Inc.
71 Progress Avenue
Cranberry Township, PA 16166
Tel: (724) 776-7000

SERIES 2100 ALUMINUM SINGLE-HUNG WINDOW
NON-IMPACT RESISTANT

REMARKS	DRWN	CHKD	DATE
INIT ISSUE	CL	FLB	04/21/08
TABLE REVISION	DW	FLB	08/19/08
TABLE REVISION	CL	FLB	10/06/04
2004 FBC	CL	FLB	07/08/05
2007 FBC	RKB	CL	05/15/08

04-113-0002
SCALE: 01
PAGE DESCRIPTION:
2
4

07/17/2008 - 5:05pm clangley F:\01 Project Files\Traco (TRA)\2004 Jobs\04-113-0002 2100 Single-Hung (Non-Impact)\04-113-0002_03e Traco - 2100 Single-Hung (Non-Impact).dwg

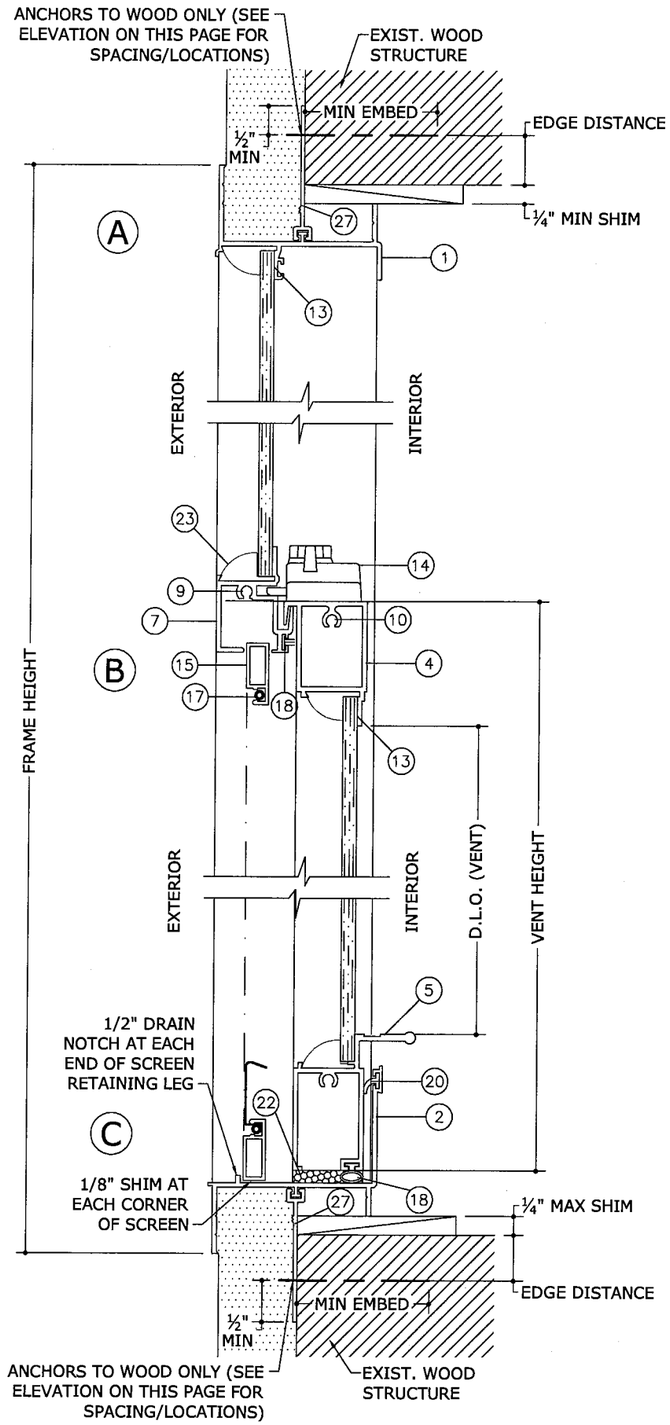

SINGLE GLAZED VERTICAL SECTION WITH NAIL FIN

1/4 — 6" = 1'-0"

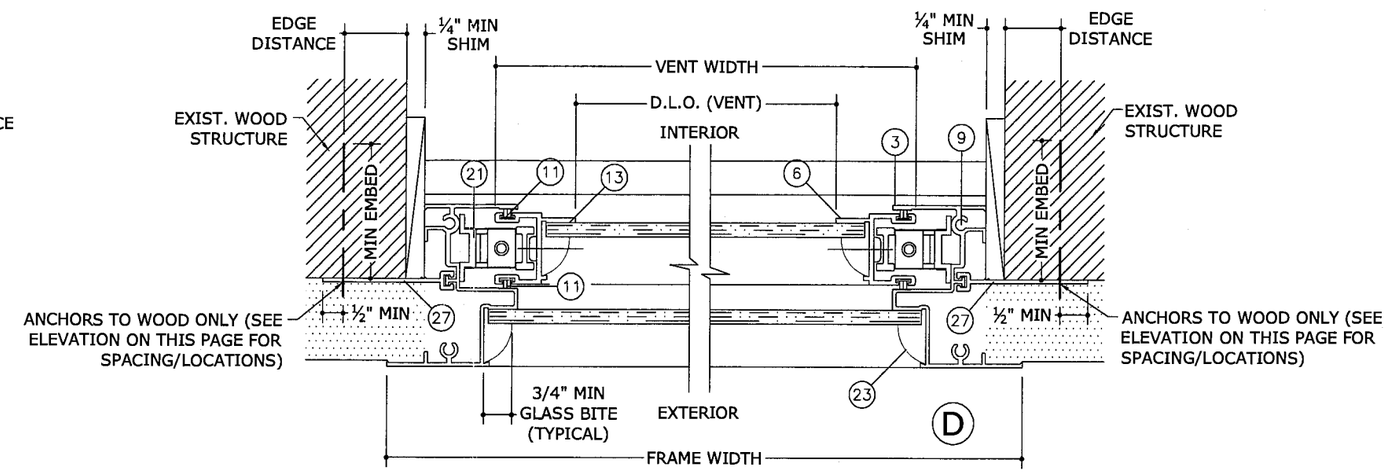

SINGLE GLAZED HORIZONTAL SECTION WITH NAIL FIN

2/4 — 6" = 1'-0"

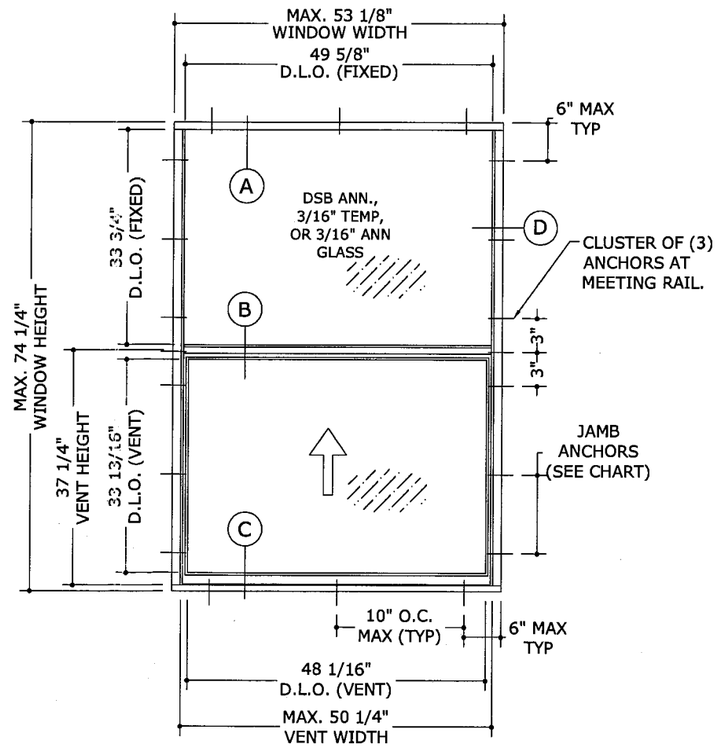

TYPICAL ELEVATION WITH NAIL FIN ANCHORAGE

3/4 — 1/2" = 1'-0" — EXTERIOR ELEV

PRODUCT REVISED
as complying with the Florida Building Code
Acceptance No 08-0527.15
Expiration Date 07/11/2012
By
Miami Dade Product Control Division

FRANK L. BENNARDO, P.E.
PE0046549
07/17/2008

ENGINEERING EXPRESS®
160 SW 12th AVENUE, #106
DEERFIELD BEACH, FL 33442
Ph: (954) 354-0660 Fax: (954) 354-0443
WWW.ENGEXP.COM
CERT OF AUTH #9885
A FRANK L. BENNARDO, P.E., INC. INNOVATION

TRACO
Windows & Doors Inc.
71 Progress Avenue
Cranberry Township, PA 16166
Tel: (724) 776-7000

SERIES 2100 ALUMINUM SINGLE-HUNG WINDOW
NON-IMPACT RESISTANT

REMARKS	DRWN	CHKD	DATE
INIT ISSUE	CL	FLB	04/21/08
TABLE REVISION	DW	FLB	08/19/08
TABLE REVISION	CL	FLB	10/06/04
2004 FBC	CL	FLB	07/08/05
2007 FBC	RKB	CL	05/15/08

04-113-0002
SCALE: 01
PAGE DESCRIPTION:

3 / 4

07/17/2008 - 5:06pm clangley F:\01 Project Files\Traco (TRA)\2004 Jobs\04-113-0002 2100 Single-Hung (Non-Impact)\04-113-0002_03e Traco - 2100 Single-Hung (Non-Impact).dwg

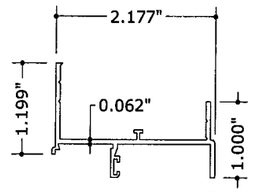

1 FRAME HEAD

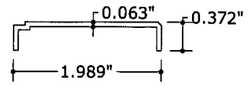

29 HEAD AND SILL PLATE

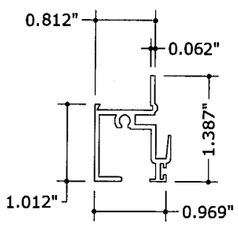

7 MEETING RAIL

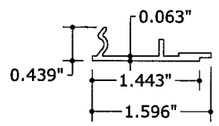

28 JAMB PLATE

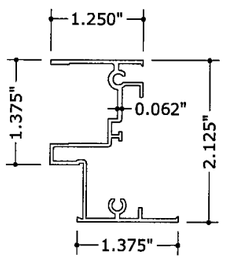

3 FRAME JAMB

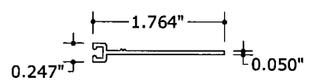

27 NAIL FIN (OPTIONAL)

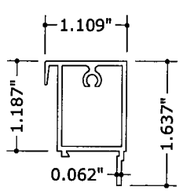

4 VENT TOP RAIL

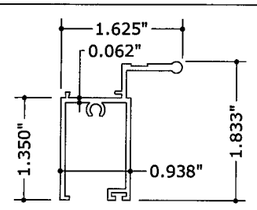

5 VENT BOTTOM RAIL

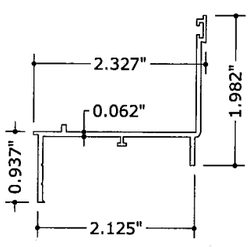

2 SILL

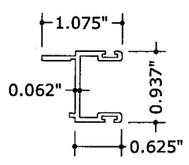

6 SASH SIDE RAIL

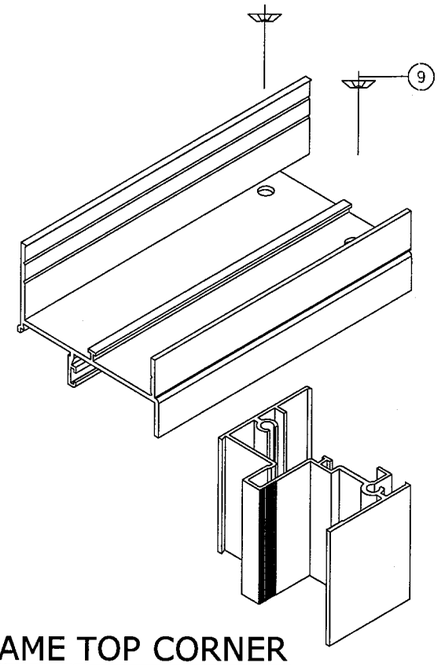

FRAME TOP CORNER

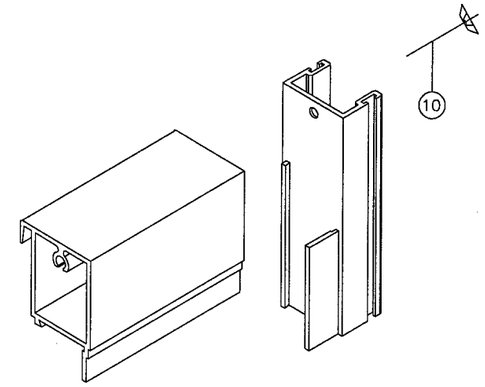

VENT TOP CORNER

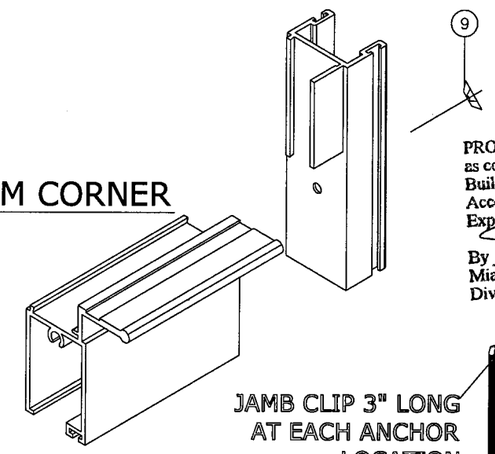

VENT BOTTOM CORNER

FRAME BOTTOM CORNER

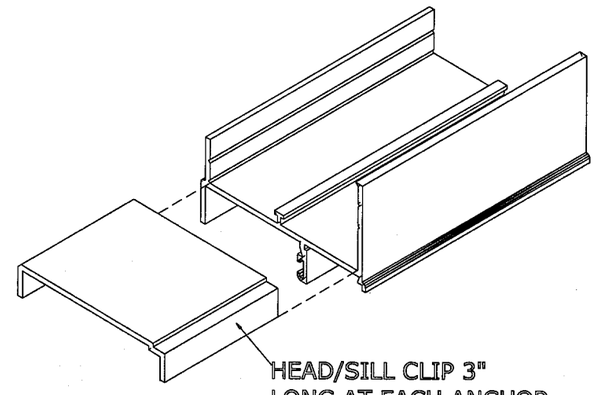

HEAD/SILL CLIP 3" LONG AT EACH ANCHOR LOCATION

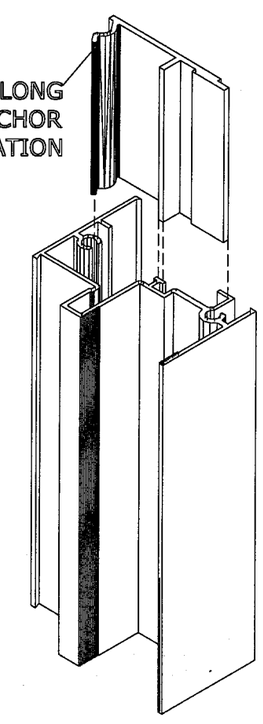

JAMB CLIP 3" LONG AT EACH ANCHOR LOCATION

PRODUCT REVISED
as complying with the Florida
Building Code
Acceptance No 08-0527.15
Expiration Date 07/11/2012
By
Miami Dade Product Control
Division

FRANK L. BENNARDO, P.E.
PE0046549

07/17/2008

ENGINEERING EXPRESS®
160 SW 12th AVENUE, #106
DEERFIELD BEACH, FL 33442
PH: (954) 354-0660 FAX: (954) 354-0443
WWW.ENGEXP.COM
CERT OF AUTH #9865
A FRANK L. BENNARDO, P.E., INC. INNOVATION

TRACO
Windows & Doors Inc.
71 Progress Avenue
Cranberry Township, PA 16166
Tel: (724) 776-7000

SERIES 2100 ALUMINUM SINGLE-HUNG WINDOW
NON-IMPACT RESISTANT

REMARKS	DRWN	CHKD	DATE
INIT ISSUE	CL	FLB	04/21/08
TABLE REVISION	DW	FLB	08/19/08
TABLE REVISION	CL	FLB	10/06/04
2004 FBC	CL	FLB	07/08/05
2007 FBC	RKB	CL	05/15/08

04-113-0002
SCALE: 01
PAGE DESCRIPTION:

4

07/17/2008 - 5:06pm clangley F:\01 Project Files\Traco (TRA)\2004 Jobs\04-113-0002 2100 Single-Hung (Non-Impact)\04-113-0002_03e Traco - 2100 Single-Hung (Non-Impact).dwg