MIAMI-DADE COUNTY
BUILDING CODE COMPLIANCE OFFICE (BCCO)
PRODUCT CONTROL DIVISION

MIAMI-DADE COUNTY, FLORIDA
METRO-DADE FLAGLER BUILDING
140 WEST FLAGLER STREET, SUITE 1603
MIAMI, FLORIDA 33130-1563
(305) 375-2901 FAX (305) 372-6339
www.maimidade.gov/buildingcode

NOTICE OF ACCEPTANCE (NOA)

K.D. Windows, Inc.
3705 Shares Place
Riviera Beach, FL 33404

SCOPE:

This NOA is being issued under the applicable rules and regulations governing the use of construction materials. The documentation submitted has been reviewed by Miami-Dade County Product Control Division and accepted by the Board of Rules and Appeals (BORA) to be used in Miami Dade County and other areas where allowed by the Authority Having Jurisdiction (AHJ).

This NOA shall not be valid after the expiration date stated below. The Miami-Dade County Product Control Division (In Miami Dade County) and/or the AHJ (in areas other than Miami Dade County) reserve the right to have this product or material tested for quality assurance purposes. If this product or material fails to perform in the accepted manner, the manufacturer will incur the expense of such testing and the AHJ may immediately revoke, modify, or suspend the use of such product or material within their jurisdiction. BORA reserves the right to revoke this acceptance, if it is determined by Miami-Dade County Product Control Division that this product or material fails to meet the requirements of the applicable building code.

This product is approved as described herein, and has been designed to comply with the Florida Building Code, including the High Velocity Hurricane Zone.

DESCRIPTION: Series Aluminum Casement Window - N.I.

APPROVAL DOCUMENT: Drawing No. **W00-12**, titled "Aluminum Casement Windows", sheets 1 through 4 of 4, dated 03/30/00 with revision "B" dated 05/28/03, prepared by Al Farooq Corporation, signed and sealed by Dr. Humayoun Farooq, P.E., bearing the Miami-Dade County Product Control Renewal stamp with the Notice of Acceptance number and expiration date by the Miami-Dade County Product Control Division.

MISSILE IMPACT RATING: None

LIMITATION: Miami-Dade County Approved Impact Resistant Hurricane Protection Devices Are Required, Complying W/ The Florida Building Code.

LABELING: Each unit shall bear a permanent label with the manufacturer's name or logo, city, state and following statement: "Miami-Dade County Product Control Approved", unless otherwise noted herein.

REVISION of this NOA shall be considered after a renewal application has been filed and there has been no change in the applicable building code negatively affecting the performance of this product.

TERMINATION of this NOA will occur after the expiration date or if there has been a revision or change in the materials, use, and/or manufacture of the product or process. Misuse of this NOA as an endorsement of any product, for sales, advertising or any other purposes shall automatically terminate this NOA. Failure to comply with any section of this NOA shall be cause for termination and removal of NOA.

ADVERTISEMENT: The NOA number preceded by the words Miami-Dade County, Florida, and followed by the expiration date may be displayed in advertising literature. If any portion of the NOA is displayed, then it shall be done in its entirety.

INSPECTION: A copy of this entire NOA shall be provided to the user by the manufacturer or its distributors and shall be available for inspection at the job site at the request of the Building Official.

This NOA **renews NOA # 03-0605.06** and consists of this page 1 and evidence pages E-1 and E-2, as well as approval document mentioned above.

The submitted documentation was reviewed by **Jaime D. Gasçon, P.E.**

MIAMI-DADE COUNTY APPROVED

J. Gascon
6/19/08

K.D. Windows, Inc.

NOTICE OF ACCEPTANCE: EVIDENCE SUBMITTED

A. DRAWINGS

1. Manufacturer's die drawings and sections.
2. Drawing No **W00-12**, titled "Aluminum Casement Windows", sheets 1 through 4 of 4, dated 03/30/00 with revision "B" dated 05/28/03, prepared by Al Farooq Corporation, signed and sealed by Dr. Humayoun Farooq, P.E.
   (Submitted under previous NOA # 03-0605.06)

B. TESTS

1. Test reports on: 1) Air Infiltration Test, per FBC, TAS 202-94
   2) Uniform Static Air Pressure Test, Loading per FBC, TAS 20294
   3) Water Resistance Test, per FBC, TAS 202-94
   4) Forced Entry Test, per FBC 2411 3.2.1 and TAS 202-94

   Along with marked-up drawings and installation diagram of an aluminum casement window, prepared by Hurricane Engineering & Testing Inc., Test Report No. **HETI-96-1075**, dated October 30, 1996, signed and sealed by Hector M. Medina, P.E.
   (Submitted under previous NOA # 01-0711.02)

C. CALCULATIONS

1. Anchor verification calculations and structural analysis, complying with FBC, prepared by Al-Farooq Corporation, dated 06/28/03, signed and sealed by Dr. Humayoun Farooq, P.E.
   Complies with ASTM E1300-98
   (Submitted under previous NOA # 03-0605.06)

D. QUALITY ASSURANCE

1. Miami Dade Building Code Compliance Office (BCCO).

E. MATERIAL CERTIFICATIONS

1. None

F. STATEMENTS

1. Statement letter of conformance and no financial interest, dated June 28, 2003, signed and sealed by Dr. Humayoun Farooq, P.E.
   (Submitted under previous NOA # 03-0605.06)
2. Asset purchase agreement dated April 13, 2001, signed by Mr. Gonzalo Montero and Mr. Robert Hoffman.
   (Submitted under previous NOA # 03-0605.06)

Jaime D. Gasçon, P.E.
Chief, Product Control Division
NOA No. 08-0529.03
Expiration Date: June 02, 2009
Approval Date: July 10, 2008

NOTICE OF ACCEPTANCE: EVIDENCE SUBMITTED

F. STATEMENTS (CONTINUED)

3. Laboratory compliance letter for Test Report no. **HETI-96-1075**, issued by Hurricane Engineering & Testing Inc., dated October 30, 1996, signed and sealed by Hector M. Medina, P.E.
(Submitted under previous NOA # 03-0605.06)

4. Testing agreement letter, dated 05/28/2008 between Fenestration Testing Laboratory (FTL) and K.D. Windows, Inc., issued by FTL.

G. OTHERS

1. Notice of Acceptance No. **03-0605.06**, issued to K.D. Windows, Inc. for their Series "**Aluminum Casement Window**", approved on 07/17/03 and expiring on 06/02/08.

2. One year conditional approval, subjected to successful verification test, the final approval will be balanced of total 5 years.

Jaime D. Gasçon, P.E.
Chief, Product Control Division
NOA No. 08-0529.03
Expiration Date: June 02, 2009
Approval Date: July 10, 2008

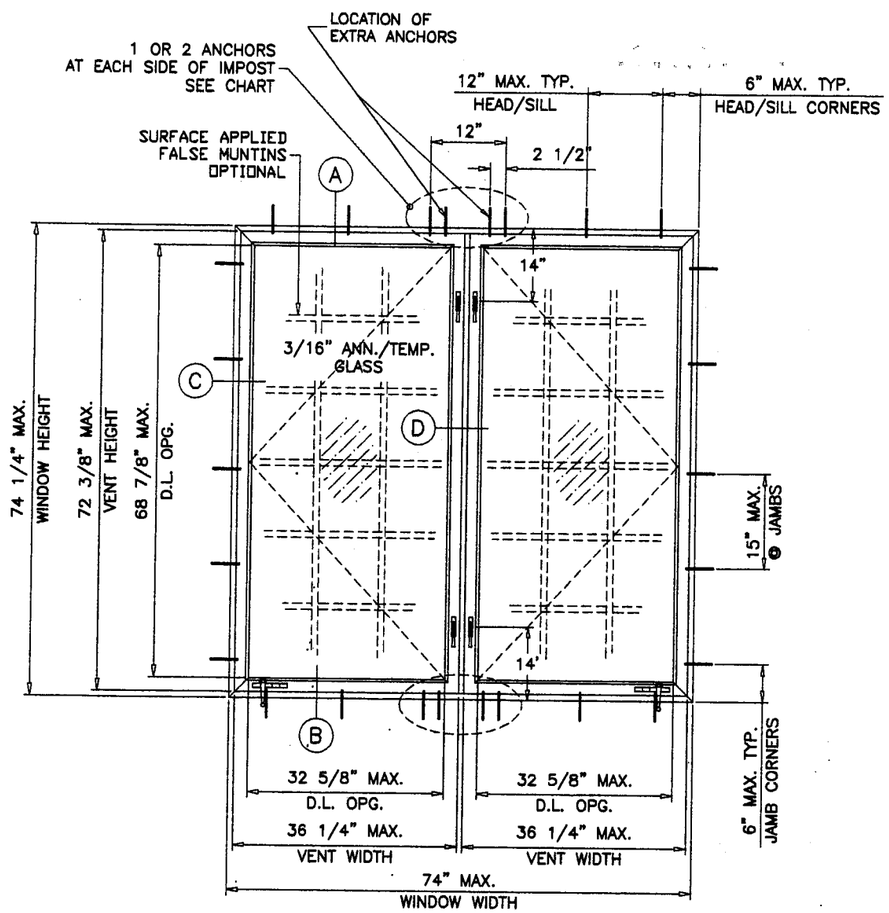

TYPICAL ELEVATION
LARGEST TESTED UNIT

NON IMPACT RESISTANT WINDOWS
MIAMI-DADE COUNTY APPROVED IMPACT RESISTANT SHUTTERS REQUIRED FOR ALL INSTALLATIONS.

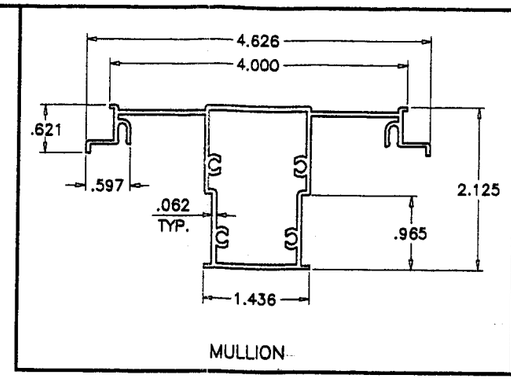

MULLION

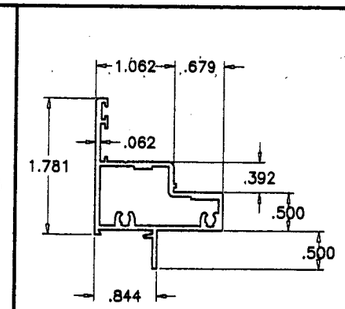

VENT

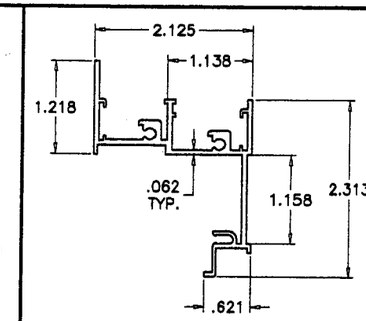

FRAME

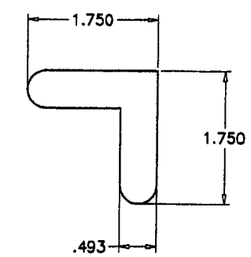

CORNER KEY
.057 THICK ST. STEEL

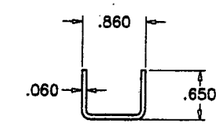

ALUM IMPOST CHANNEL
14" LONG

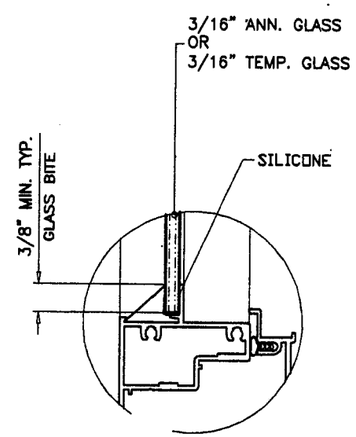

GLAZING DETAIL

NOTES:

1. THIS PRODUCT IS DESIGNED TO COMPLY WITH THE HIGH VELOCITY HURRICANE ZONE OF THE 2001 FLORIDA BUILDING CODE.
   ALSO FOR WIND LOADS AS PER ASCE 7-88. ASCE 7-93, ASCE 7-95 OR ASCE 7-98 AS REQUIRED BY PREVAILING BUILDING CODE.
2. WOOD BUCKS BY OTHERS, MUST BE ANCHORED PROPERLY TO TRANSFER LOADS TO THE STRUCTURE.
3. ANCHORS SHALL BE AS LISTED, SPACED AS SHOWN ON DETAILS. ANCHOR EMBEDMENT TO BASE MATERIAL SHALL BE BEYOND WALL DRESSING OR STUCCO.

PRODUCT RENEWED
as complying with the Florida Building Code
Acceptance No 08-0529.03
Expiration Date 06/02/2009
By
Miami Dade Product Control Division

Engr: DR. HUMAYOUN FAROOQ
STRUCTURES
FLA. PE # 16557
C.A.N. 3538
MAY 30 2003

PRODUCT RENEWED
as complying with the Florida Building Code
Acceptance No 03-0605.06
Expiration Date JUNE 2, 2008
By
Miami Dade Product Control Division

AL-FAROOQ CORPORATION
ENGINEERS, PLANNERS & PRODUCT DESIGN
1235 SW 87 AVE
MIAMI, FLORIDA 33174
TEL. (305) 264-8100 FAX. (305) 262-6978
COMP-ANL\WOO-12AW

ALUMINUM CASEMENT WINDOWS

KD WINDOWS
3705 SHARES PLACE
RIVIERA BEACH, FL. 33404
TEL.(561) 845-1401 FAX(-) -

KD Windows

revisions:

no	date	by	description
A	06.06.01		CO. NAME CHANGED
B	05.28.03		UPDATED FOR FBC

date: 03-30-00
scale: 1/2" = 1"
dr. by: HAMID
chk. by:

drawing no.
WOO-12

sheet 1 of 4

DESIGN LOAD CAPACITY – PSF FOR (X) SIZES

WINDOW DIMS.		3/16" ANN. GLASS				3/16" TEMP. GLASS			
		3/16" TAPCONS		1/4" TAPCONS		3/16" TAPCONS		1/4" TAPCONS	
WIDTH	HEIGHT	EXT. (+)	1NT. (–)	EXT. (+)	1NT. (–)	EXT. (+)	1NT. (–)	EXT. (+)	1NT. (–)
19-1/8"	26" (3)	86.7	121.4	86.7	121.4	86.7	185.9	86.7	210.0
26-1/2"		86.7	121.4	86.7	121.4	86.7	134.2	86.7	210.0
37"		86.7	96.1	86.7	105.6	86.7	96.1	86.7	171.5
19-1/8"	38-3/8" (3)	86.7	121.4	86.7	121.4	86.7	126.0	86.7	210.0
26-1/2"		86.7	90.9	86.7	98.9	86.7	90.9	86.7	162.3
37"		70.3	65.1	70.3	70.3	86.7	65.1	86.7	116.2
19-1/8"	50-5/8" (4)	86.7	121.4	86.7	121.4	86.7	127.3	86.7	210.0
26-1/2"		73.9	73.9	73.9	73.9	86.7	91.9	86.7	164.0
37"		53.7	53.7	53.7	53.7	86.7	65.8	86.7	117.5
19-1/8"	63" (5)	86.7	103.3	86.7	103.3	86.7	127.9	86.7	195.5
26-1/2"		61.6	61.6	61.6	61.6	86.7	92.3	86.7	146.1
37"		41.2	41.2	41.2	41.2	86.7	66.1	86.7	112.5
19-1/8"	74-1/4" (6)	81.2	81.2	81.2	81.2	86.7	118.2	86.7	118.2
26-1/2"		56.9	56.9	56.9	56.9	78.1	87.4	78.1	87.4
37"		32.7	32.7	32.7	32.7	–	–	–	–
18"	24" (3)	86.7	121.4	86.7	121.4	86.7	210.0	86.7	210.0
24"		86.7	121.4	86.7	121.4	86.7	160.5	86.7	210.0
30"		86.7	121.4	86.7	121.4	86.7	128.4	86.7	210.0
36"		86.7	107.0	86.7	121.4	86.7	107.0	86.7	191.0
18"	36" (3)	86.7	121.4	86.7	121.4	86.7	142.7	86.7	210.0
24"		86.7	107.0	86.7	121.4	86.7	107.0	86.7	191.0
30"		86.7	85.6	86.7	90.8	86.7	85.6	86.7	152.8
36"		76.8	71.3	76.8	76.8	86.7	71.3	86.7	127.3
18"	48" (4)	86.7	121.4	86.7	121.4	86.7	142.7	86.7	210.0
24"		86.7	91.5	86.7	91.5	86.7	107.0	86.7	191.0
30"		66.6	66.6	66.6	66.6	86.7	85.6	86.7	152.8
36"		57.8	57.8	57.8	57.8	86.7	71.3	86.7	127.3
18"	60" (5)	86.7	115.2	86.7	115.2	86.7	142.7	86.7	210.0
24"		81.6	81.6	81.6	81.6	86.7	107.0	86.7	179.0
30"		51.9	51.9	51.9	51.9	86.7	85.6	86.7	146.0
36"		44.1	44.1	44.1	44.1	86.7	71.3	86.7	121.7
18"	72" (5)	86.7	93.0	86.7	93.0	86.7	118.9	86.7	137.5
24"		70.8	70.8	70.8	70.8	86.7	89.2	86.7	105.2
30"		44.0	44.0	44.0	44.0	77.1	71.3	77.1	86.3
36"		34.7	34.7	34.7	34.7	–	–	–	–

( ) = NO. OF ANCHORS PER JAMB

DESIGN LOAD CAPACITY – PSF FOR (XX) SIZES

WINDOW DIMS.		3/16" ANN. GLASS				3/16" TEMP. GLASS			
		3/16" TAPCONS		1/4" TAPCONS		3/16" TAPCONS		1/4" TAPCONS	
WIDTH	HEIGHT	EXT. (+)	1NT. (–)	EXT. (+)	1NT. (–)	EXT. (+)	1NT. (–)	EXT. (+)	1NT. (–)
37"	26" (3)	86.7	121.4	86.7	121.4	86.7	185.9	86.7	* 210.0
53-1/8"		86.7	121.4	86.7	121.4	86.7	134.2	86.7	* 210.0
74"		86.7	96.1	86.7	105.6	86.7	96.1	86.7	* 171.5
37"	38-3/8" (3)	86.7	121.4	86.7	121.4	86.7	126.0	86.7	* 210.0
53-1/8"		86.7	90.9	86.7	98.9	86.7	90.9	86.7	* 162.3
74"		70.3	65.1	70.3	70.3	86.7	65.1	86.7	* 116.2
37"	50-5/8" (4)	86.7	* 121.4	86.7	121.4	86.7	* 127.3	86.7	* 210.0
53-1/8"		73.9	* 73.9	73.9	73.9	86.7	* 91.9	86.7	* 164.0
74"		53.7	* 53.7	53.7	53.7	86.7	* 65.8	86.7	* 117.5
37"	63" (5)	86.7	* 103.3	86.7	103.3	86.7	* 127.9	86.7	* 195.5
53-1/8"		61.6	* 61.6	61.6	61.6	86.7	* 92.3	86.7	* 146.1
74"		41.2	* 41.2	41.2	41.2	86.7	* 66.1	86.7	* 112.5
37"	74-1/4" (6)	81.2	* 81.2	81.2	81.2	86.7	* 118.2	86.7	* 118.2
53-1/8"		56.9	* 56.9	56.9	56.9	78.1	* 87.4	78.1	* 87.4
74"		32.7	* 32.7	32.7	32.7	–	–	–	–
36"	24" (3)	86.7	121.4	86.7	121.4	86.7	210.0	86.7	210.0
48"		86.7	121.4	86.7	121.4	86.7	160.5	86.7	210.0
60"		86.7	121.4	86.7	121.4	86.7	128.4	86.7	* 210.0
72"		86.7	107.0	86.7	121.4	86.7	107.0	86.7	* 191.0
36"	36" (3)	86.7	121.4	86.7	121.4	86.7	142.7	86.7	* 210.0
48"		86.7	107.0	86.7	121.4	86.7	107.0	86.7	* 191.0
60"		86.7	85.6	86.7	90.8	86.7	85.6	86.7	* 152.8
72"		76.8	71.3	76.8	76.8	86.7	71.3	86.7	* 127.3
36"	48" (4)	86.7	121.4	86.7	121.4	86.7	* 142.7	86.7	* 210.0
48"		86.7	* 91.5	86.7	91.5	86.7	* 107.0	86.7	* 191.0
60"		66.6	* 66.6	66.6	66.6	86.7	* 85.6	86.7	* 152.8
72"		57.8	* 57.8	57.8	57.8	86.7	* 71.3	86.7	* 127.3
36"	60" (5)	86.7	* 115.2	86.7	115.2	86.7	* 142.7	86.7	* 210.0
48"		81.6	* 81.6	81.6	81.6	86.7	* 107.0	86.7	* 179.0
60"		51.9	* 51.9	51.9	51.9	86.7	* 85.6	86.7	* 146.0
72"		44.1	* 44.1	44.1	44.1	86.7	* 71.3	86.7	* 121.7
36"	72" (5)	86.7	* 93.0	86.7	93.0	86.7	* 118.9	86.7	* 137.5
48"		70.8	* 70.8	70.8	70.8	86.7	* 89.2	86.7	* 105.2
60"		44.0	* 44.0	44.0	44.0	77.1	* 71.3	77.1	* 86.3
72"		34.7	* 34.7	34.7	34.7	–	–	–	–

1 ANCHOR REQD. AT EACH SIDE OF IMPOST ON ALL WINDOWS
2 ANCHORS REQD. AT EACH SIDE OF IMPOST ON (*) WINDOWS

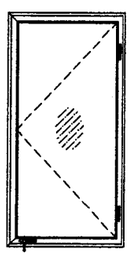

(X)
SINGLE VENT WINDOWS

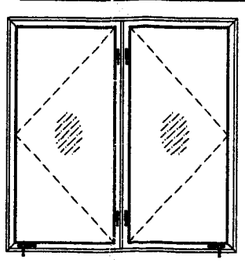

(XX)
DUAL VENT WINDOWS

APPROVED CONFIGURATIONS

PRODUCT RENEWED
as complying with the Florida
Building Code
Acceptance No 08-0529.03
Expiration Date 06/02/2009
By
Miami Dade Product Control
Division

Engr: DR. HUMAYOUN FAROOQ
STRUCTURES
FLA. PE # 16557
C.A.N. 3538

MAY 3 0 2003

PRODUCT RENEWED
as complying with the Florida
Building Code
Acceptance No 03-0605.06
Expiration Date JUNE 2, 2008
By
Miami Dade Product Control
Division

AL-FAROOQ CORPORATION
ENGINEERS, PLANNERS & PRODUCT DESIGN
1235 SW 87 AVE
MIAMI, FLORIDA 33174
TEL (305) 264-8100 FAX. (305) 262-6978

COMP-ANL\WOO-12AW

ALUMINUM CASEMENT WINDOWS

KD WINDOWS
3705 SHARES PLACE
RIVIERA BEACH, FL. 33404
TEL(561) 845-1401 FAX(-) -

KD Windows

revisions:			
no	date	by	description
B	05.28.03		CHART REV.

date: 03-30-00
scale: 1/2" = 1"
dr. by: HAMID
chk. by:

drawing no.
WOO-12

sheet 2 of 4

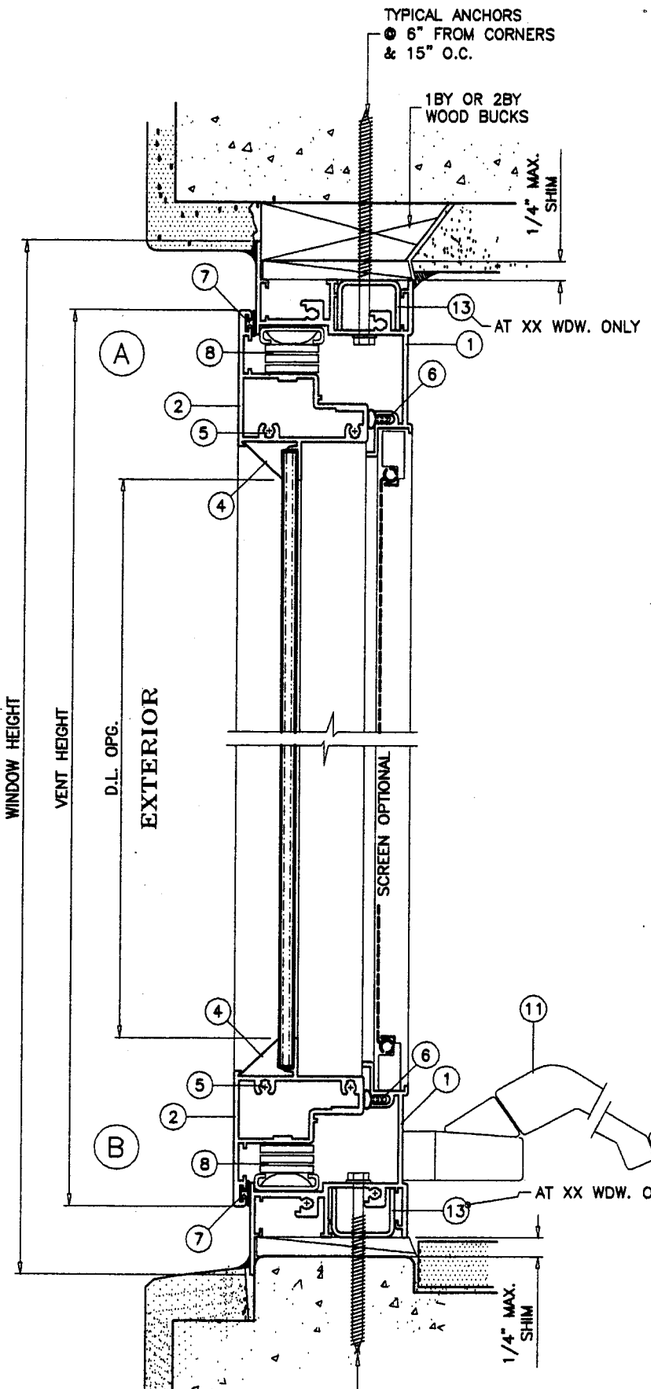

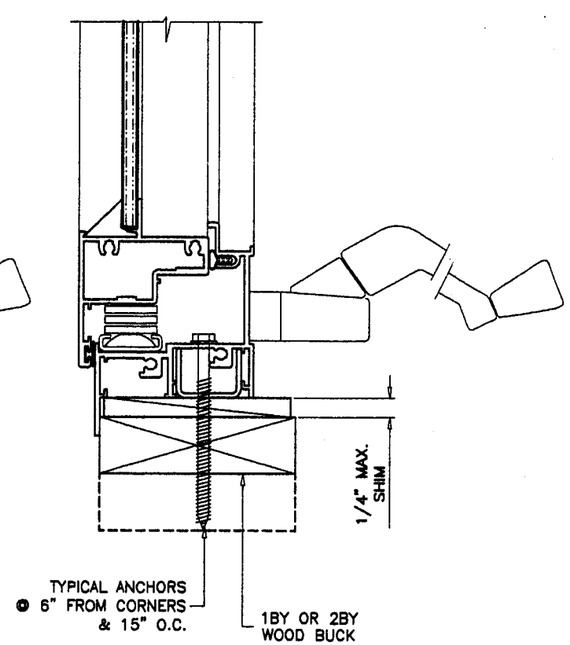

TYPICAL ANCHORS: SEE ELEV. FOR SPACING

3/16" TAPCONS

A) INTO 2BY WOOD BUCKS OR WOOD STRUCTURE
1-3/8" MIN. PENETRATION INTO WOOD

B) THRU 1 BY WOOD BUCKS INTO MASONRY OR DIRECTLY INTO MASONRY
1-1/4" MIN. EMBED INTO CONC. OR MASONRY

1/4" TAPCONS

A) INTO WOOD BUCKS OR WOOD STRUCTURE
1-3/4" MIN. PENETRATION INTO WOOD

B) THRU WOOD BUCKS INTO MASONRY OR DIRECTLY INTO MASONRY
1-1/4" MIN. EMBED INTO CONC. OR MASONRY

TAPCONS (BY ELCO) OR
EQUIV. CONC. ANCHOR HOLDING CURRENT NOTICE OF ACCEPTANCE.

WOOD BUCKS NOT BY KD WINDOWS, MUST SUSTAIN LOADS IMPOSED BY GLAZING SYSTEM AND TRANSFER THEM TO THE BUILDING STRUCTURE.

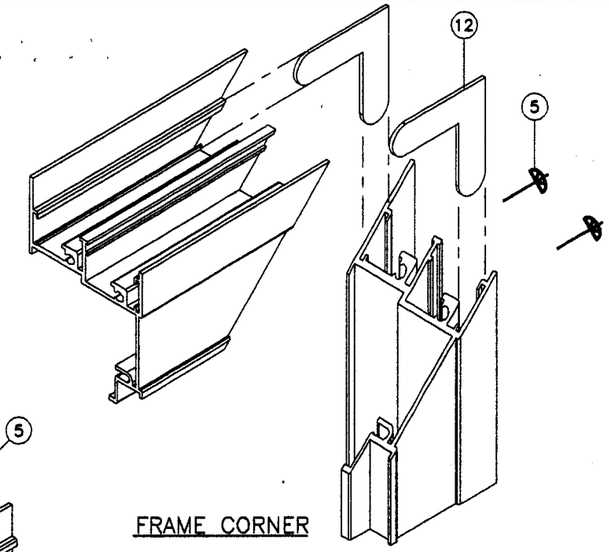

FRAME CORNER

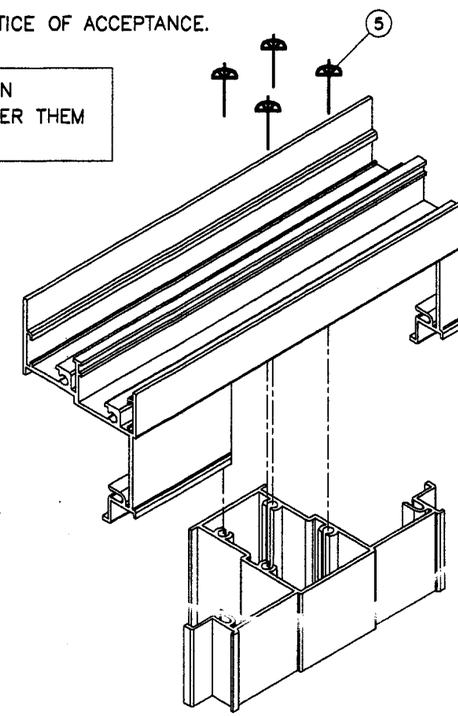

IMPOST CORNER

ALL FRAME AND VENT CORNERS TO BE SEALED WITH WHITE/ALUM COLORED SEALANT.

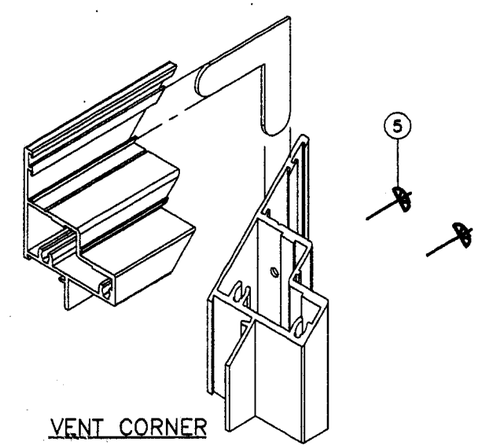

VENT CORNER

PRODUCT RENEWED
as complying with the Florida
Building Code
Acceptance No 08-0529.03
Expiration Date 06/02/2009
By
Miami Dade Product Control
Division

Engr: DR. HUMAYOUN FAROOQ
STRUCTURES
FLA. PE # 16557
C.A.N. 3538

MAY 30 2003

PRODUCT RENEWED
as complying with the Florida
Building Code
Acceptance No 03-0605.06
Expiration Date JUNE 2, 2008
By
Miami Dade Product Control
Division

AL-FAROOQ CORPORATION
ENGINEERS, PLANNERS & PRODUCT DESIGN
1235 SW 87 AVE
MIAMI, FLORIDA 33174
TEL. (305) 264-8100 FAX. (305) 262-6978

COMP-ANL\WOO-12AW

ALUMINUM CASEMENT WINDOWS

KD Windows

KD WINDOWS
3705 SHARES PLACE
RIVIERA BEACH, FL. 33404
TEL.(561) 845-1401 FAX(-) -

revisions:

no	date	by	description
B	05.28.03		NO CHANGE THIS SHEET

date: 03-30-00
scale: 1/2" = 1"
dr. by: HAMID
chk. by:

drawing no.
WOO-12

sheet 3 of 4

ITEM	PART #	QUANTITY	DESCRIPTION	MATERIAL	MANF./SUPPLIER/REMARKS
1	AW-501	4	FRAME	6063-T6	–
2	AW-502	4	VENT	6063-T6	–
3	AW-503	1	CENTER POST	6063-T6	–
4	–	AS REQD.	GLAZING BEAD	ALUMINUM	–
5	–	AS REQD.	FRAME AND VENT ASSEMBLY SCREWS	–	#8 X 1-1/4" SS SMS
6	–	AS REQD.	FRAME WEATHERSTRIPPING	VINYL	–
7	–	AS REQD.	VENT WEATHERSTRIPPING	VINYL	–
8	–	2/ VENT	4 BAR HINGE, AT TOP AND BOTTOM	STEEL	TRUTH, ATTACHED W/ (6) #8 X 3/8" SS SMS
9	–	2/ VENT	FACE MOUNT LOCK	STEEL	AT 14" FROM TOP AND BOTTOM
10	–	2/ VENT	.110 THICK LOCK KEEPER, AT FRAME JAMB FACING LOCK	STEEL	CGI, ATTACHED W/ (2) #10 X 3/8" SS SMS
11	–	1	OPERATOR HANDLE	STEEL	TRUTH, ATTACHED W/ (2) #8 X 3/8" SS SMS
12	–	–	.057 THICK CORNER KEY	ST. STEEL	–
13	–	AS REQD.	IMPOST CHANNEL 14" LONG	ALUMINUM	AT IMPOST LOCATION ON XX WINDOWS ONLY

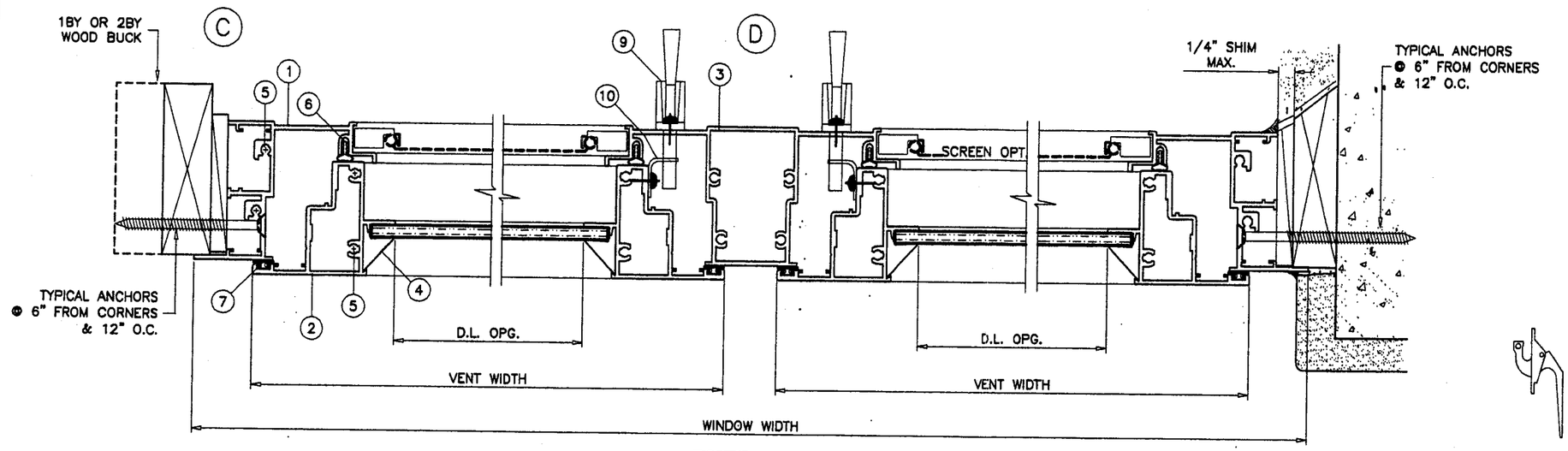

EXTERIOR
DUAL VENT WINDOWS

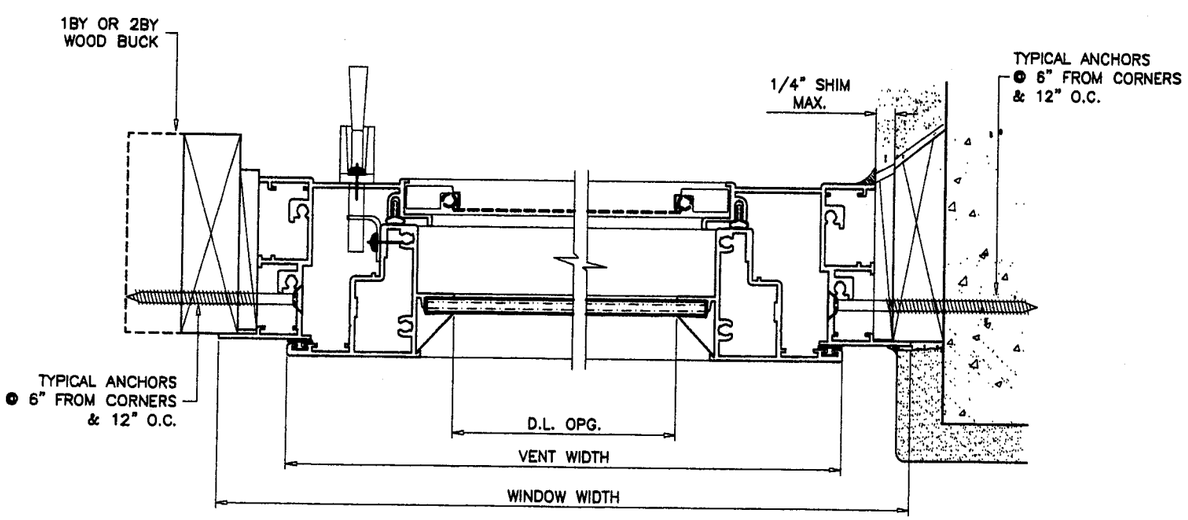

EXTERIOR
SINGLE VENT WINDOWS

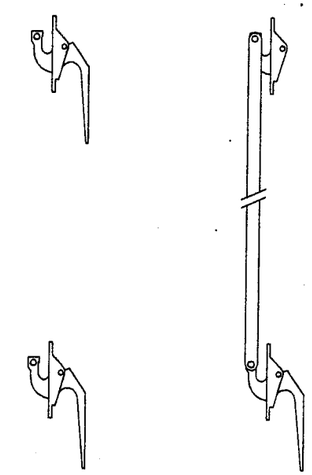

INDIVIDUAL LOCKS CONNECTED LOCKS

LOCKING OPTIONS

PRODUCT RENEWED
as complying with the Florida Building Code
Acceptance No 08-0529.03
Expiration Date 06/02/2009
By
Miami-Dade Product Control Division

Engr: DR. HUMAYOUN FAROOQ
STRUCTURES
FLA. PE # 16557
C.A.N. 3538

MAY 30 2003

PRODUCT RENEWED
as complying with the Florida Building Code
Acceptance No 03-0605.06
Expiration Date JUNE 2, 2008
By
Miami Dade Product Control Division

AL-FAROOQ CORPORATION
ENGINEERS, PLANNERS & PRODUCT DESIGN
1235 SW 87 AVE
MIAMI, FLORIDA 33174
TEL (305) 264-8100 FAX. (305) 262-6978
COMP-ANL\WOO-12AW

ALUMINUM CASEMENT WINDOWS

KD WINDOWS
3705 SHARES PLACE
RIVIERA BEACH, FL. 33404
TEL.(561) 845-1401 FAX(-) -

revisions:

no	date	by	description
B	05.28.03		NO CHANGE THIS SHEET

date: 03-30-00
scale: 1/2" = 1"
dr. by: HAMID
chk. by:

drawing no. WOO-12

sheet 4 of 4