MIAMI-DADE COUNTY
BUILDING CODE COMPLIANCE OFFICE (BCCO)
PRODUCT CONTROL DIVISION

MIAMI-DADE COUNTY, FLORIDA
METRO-DADE FLAGLER BUILDING
140 WEST FLAGLER STREET, SUITE 1603
MIAMI, FLORIDA 33130-1563
(305) 375-2901 FAX (305) 372-6339
www.maimidade.gov/buildingcode

NOTICE OF ACCEPTANCE (NOA)

YKK AP America, Inc.
332 Firetower Road
Dublin, GA 31021

SCOPE:

This NOA is being issued under the applicable rules and regulations governing the use of construction materials. The documentation submitted has been reviewed by Miami-Dade County Product Control Division and accepted by the Board of Rules and Appeals (BORA) to be used in Miami Dade County and other areas where allowed by the Authority Having Jurisdiction (AHJ).

This NOA shall not be valid after the expiration date stated below. The Miami-Dade County Product Control Division (In Miami Dade County) and/or the AHJ (in areas other than Miami Dade County) reserve the right to have this product or material tested for quality assurance purposes. If this product or material fails to perform in the accepted manner, the manufacturer will incur the expense of such testing and the AHJ may immediately revoke, modify, or suspend the use of such product or material within their jurisdiction. BORA reserves the right to revoke this acceptance, if it is determined by Miami-Dade County Product Control Division that this product or material fails to meet the requirements of the applicable building code.

This product is approved as described herein, and has been designed to comply with the Florida Building Code, including the High Velocity Hurricane Zone.

DESCRIPTION: Series "YHC-300 SSG-SS" Single Glazing Aluminum Curtain Wall System – SMI

APPROVAL DOCUMENT: Drawing No. **W08-40**, titled "YHC-300 SSG Aluminum Curtain Wall System (S.M.I.)", sheets 1, 2, 2.1, 3 through 19,19.1,19.2 and 20 through 22 of 22, dated 04/30/08 with revision C dated 09/02/08, prepared by Al-Farooq Corporation, signed and sealed by Humayoun Farooq, P.E., and bearing the Miami-Dade County Product Control Revision stamp with the Notice of Acceptance number and expiration date by the Miami-Dade County Product Control Division.

MISSILE IMPACT RATING: Small Missile Impact Resistant

LABELING: Each unit shall bear a permanent label with the manufacturer's name or logo, city, state and following statement: "Miami-Dade County Product Control Approved", unless otherwise noted herein.

RENEWAL of this NOA shall be considered after a renewal application has been filed and there has been no change in the applicable building code negatively affecting the performance of this product.

TERMINATION of this NOA will occur after the expiration date or if there has been a revision or change in the materials, use, and/or manufacture of the product or process. Misuse of this NOA as an endorsement of any product, for sales, advertising or any other purposes shall automatically terminate this NOA. Failure to comply with any section of this NOA shall be cause for termination and removal of NOA.

ADVERTISEMENT: The NOA number preceded by the words Miami-Dade County, Florida, and followed by the expiration date may be displayed in advertising literature. If any portion of the NOA is displayed, then it shall be done in its entirety.

INSPECTION: A copy of this entire NOA shall be provided to the user by the manufacturer or its distributors and shall be available for inspection at the job site at the request of the Building Official.

This NOA **revises and renews NOA # 07-0529.15** and consists of this page 1 and evidence pages E-1 and E-2, as well as approval document mentioned above.

The submitted documentation was reviewed by **Fitz A. Harris, P.E.**

Fitz A. Harris

MIAMI-DADE COUNTY APPROVED

YKK AP America, Inc.

NOTICE OF ACCEPTANCE: EVIDENCE SUBMITTED

A. DRAWINGS

1. Manufacturer's die drawings and sections.
2. Drawing No **W08-40**, Sheets 1, 2, 2.1, 3 through 19, 19.1, 19.2 and 20 through 22 of 22, titled "YHC-300 SSG Alum. Curtain Wall System (S.M.I.)", dated 04/30/08, with revision C dated 09/02/08, prepared by Al-Farooq Corporation, signed and sealed by Humayoun Farooq, P.E.

B. TESTS

1. Test reports on: 1) Air Infiltration Test, per FBC, TAS 202-94
   2) Uniform Static Air Pressure Test, Loading per FBC TAS 202-94
   3) Water Resistance Test, per FBC, TAS 202-94
   4) Small Missile Impact Test per FBC, TAS 201-94
   5) Large Missile Impact Test per FBC, TAS 201-94
   6) Cyclic Wind Pressure Loading per FBC, TAS 203-94

   along with marked-up drawings and installation diagram of YKK series YHC 300 SSG laminated glass aluminum curtain wall system, prepared by Hurricane Test Laboratory, Inc., Test Report No. **HTL- 0231-0106-08**, specimens #2, #3, #7, #8 & #9, dated 5/05/08, signed and sealed by Vinu J. Abraham, P.E.

C. CALCULATIONS

1. Anchor verification calculations and structural analysis, complying with FBC-2004 and 2007, prepared by Al-Farooq Corporation, dated 5/23/08 and 8/21/08, signed and sealed by Humayoun Farooq, P.E.
   Complies with ASTM E1300-02/04

D. QUALITY ASSURANCE

1. Miami Dade Building Code Compliance Office (BCCO).

E. MATERIAL CERTIFICATIONS

1. Notice of Acceptance No. **07-1116.04** issued to E.I. DuPont DeNemours & Co., Inc. for their "**DuPont SentryGlas ® Plus**" dated 01/03/08, expiring on 01/14/12.
2. Notice of Acceptance No. **03-0415.13** issued to Solutia Inc. for their "**Vanceva Composites used for lamination of glass**" dated 12/11/03, expiring on 12/11/08.

Fitz A. Harris

Fitz A. Harris, P.E.
Product Control Examiner
NOA No. 08-0603.03
Expiration Date: May 30, 2012
Approval Date: October 02, 2008

MIAMI-DADE COUNTY APPROVED

NOTICE OF ACCEPTANCE: EVIDENCE SUBMITTED

F. STATEMENTS

1. Statement letter of conformance, dated May 20, 2008, signed and sealed by Humayoun Farooq, P.E.
2. Statement letter of no financial interest, dated May 20, 2008, signed and sealed by Humayoun Farooq, P.E.
3. Laboratory compliance letter for Test Report No. **HTL- 0231-0106-08**, issued by Hurricane Test Laboratory, Inc., dated 5/5/08, signed and sealed by Vinu J. Abraham, P.E.

G. OTHER

1. Notice of Acceptance No. **07-0529.15**, issued to YKK AP America, Inc. for their "YHC-300 SSG Hurricane Single Glazing Aluminum Curtain Wall System – S.M.I." approved on 06/28/07 and expiring on 05/30/08.

Fitz A. Harris

Fitz A. Harris, P.E.
Product Control Examiner
NOA No. 08-0603.03
Expiration Date: May 30, 2012
Approval Date: October 02, 2008

MIAMI-DADE COUNTY APPROVED

YHC-300 SSG ALUMINUM CURTAIN WALL SYSTEM

CURTAIN WALL SYSTEM IS RATED FOR SMALL MISSILE IMPACT.
MIAMI-DADE COUNTY APPROVED IMPACT RESISTANT SHUTTERS REQUIRED FOR INSTALLATIONS UP TO 30 FT. OF GRADE.
SHUTTERS NOT REQD. FOR INSTALLATIONS ABOVE 30 FT. OF GRADE.

CODE REQUIREMENTS FOR SAFEGUARDS MUST BE OBSERVED.

THIS PRODUCT HAS BEEN DESIGNED AND TESTED TO COMPLY WITH THE REQUIREMENTS OF THE FLORIDA BUILDING CODE 2004/2007 EDITION INCLUDING HIGH VELOCITY HURRICANE ZONE (HVHZ).

ANCHORS SHALL BE AS LISTED, SPACED AS SHOWN ON DETAILS, ANCHORS EMBEDMENT TO BASE MATERIAL SHALL BE BEYOND WALL DRESSING OR STUCCO.

ANCHORING OR LOADING CONDITIONS NOT SHOWN IN THESE DETAILS ARE NOT PART OF THIS APPROVAL.

MATERIALS INCLUDING BUT NOT LIMITED TO STEEL/METAL SCREWS, THAT COME INTO CONTACT WITH OTHER DISSIMILAR MATERIALS SHALL MEET THE REQUIREMENTS OF 2004/2007 FLORIDA BLDG. CODE SECTION 2003.8.4.

INSTRUCTIONS:

USE CHARTS AS FOLLOWS.

STEP 1 DETERMINE DESIGN WIND LOAD REQUIREMENT BASED ON WIND VELOCITY, BLDG. HEIGHT, WIND ZONE USING APPLICABLE ASCE 7 STANDARD.

STEP 2 SEE CHARTS ON SHEET 3 FOR DESIGN LOAD CAPACITY OF DESIRED GLASS SIZE.

STEP 3 CHECK MULLION CAPACITY FOR A GIVEN SPACING AND HEIGHT USING CHARTS ON SHEETS 5, 6 & 8 FOR SINGLE SPANS, AND CHARTS ON SHEETS 7 & 9 FOR EQUAL MULTIPLE SPANS.

STEP 4 USING HEAD/SILL ANCHOR DETAILS ON SHEET 4 SELECT ANCHOR OPTION WITH DESIGN RATING MORE THAN DESIGN LOAD SPECIFIED IN STEP 1 ABOVE.

STEP 5 CHECK INTERMEDIATE ANCHOR CAPACITY FOR MULTIPLE SPANS USING CHARTS OR DETAILS ON SHEETS 14 THRU 19.

STEP 6 THE LOWEST VALUE RESULTING FROM STEPS 2, 3, 4 AND 5 SHALL APPLY TO ENTIRE SYSTEM.

INDEX OF DRAWING

SHEET NO.	DESCRIPTION
1	GENERAL NOTES
2	TYPICAL CURTAIN WALL ELEVATION
3	GLASS CAPACITY CHART
4	HEAD/SILL ANCHOR CAPACITY CHART
5	SINGLE SPAN MULLION CHART W/O HORIZONTALS DOOR JAMB MULLION CHART
6	SINGLE SPAN MULLION CHART WITH HORIZONTALS
7	TWIN SPAN MULLION CAPACITY
8	SINGLE SPAN CORNER MULLION
9	TWIN SPAN CORNER MULLION
10 & 11	VERTICAL AND HORIZONTAL SECTION DETAILS
12 & 13	CORNER MULLION DETAILS
14 & 15	WIND LOAD ANCHOR DETAILS
16 & 17	WIND LOAD + DEAD LOAD ANCHOR DETAILS
18 & 19	WIND LOAD + DEAD LOAD CORNER MULLION ANCHOR DETAILS
20	EXTRUSION DETAILS
21	BILL OF MATERIALS
22	CORNER CONSTRUCTION DETAILS

PRODUCT REVISED
in complying with the Florida Building Code
Acceptance No 08-0603.03
Expiration Date 5-30-12
By Miami Dade Product Control Division

LAMINATED GLASS
SMALL MISSILE IMPACT

Engr: DR. HUMAYOUN FAROOQ
STRUCTURES
FLA. PE # 16557
C.A.N. 3538
SEP 0 3 2008

AL-FAROOQ CORPORATION
ENGINEERS & PRODUCT DEVELOPMENT
1235 S.W. 87 AVE
MIAMI, FLORIDA 33174
TEL. (305) 264-8100 FAX. (305) 262-6978

COMP-ANL\W08-40YKK

YHC-300 SSG ALUM CURTAIN WALL SYSTEM (S.M.I.)

YKK AP AMERICA INC.
332 FIRETOWER ROAD
DUBLIN, GEORGIA 31021
TEL(478) 277-1955 FAX(478) 277-1978

revisions:

no	date	by	description
A	07.25.08		REV. PER BCCO COMMENTS
B	08.14.08		NO CHANGE THIS SHEET
C	09.02.08		NO CHANGE THIS SHEET

date: 04-30-08
scale: -
dr. by: HAMID
chk. by:

drawing no.
W08-40

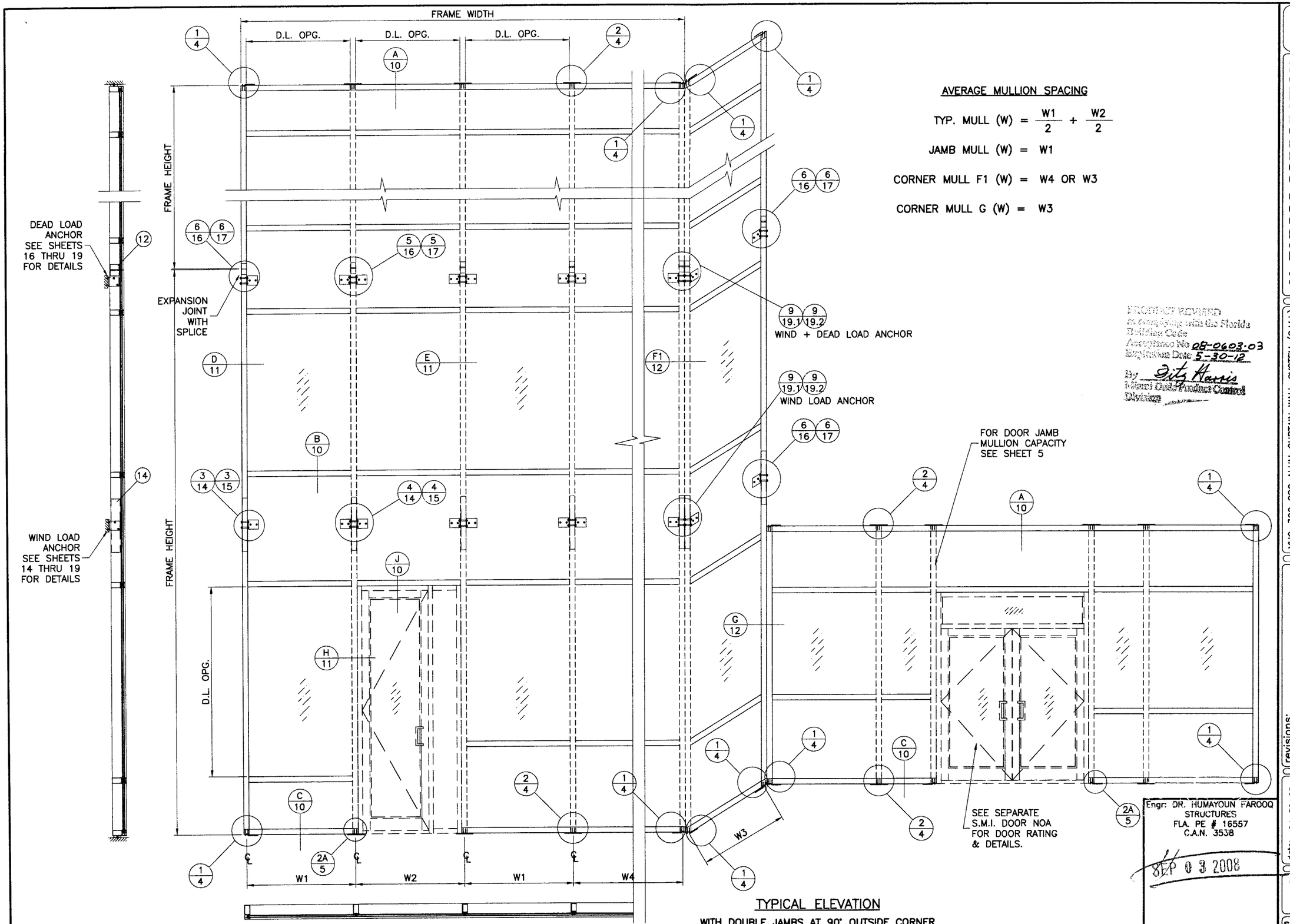

AVERAGE MULLION SPACING

TYP. MULL (W) = $\frac{W1}{2} + \frac{W2}{2}$

JAMB MULL (W) = W1

CORNER MULL F1 (W) = W4 OR W3

CORNER MULL G (W) = W3

PRODUCT REVISED
In Compliance with the Florida Building Code
Acceptance No. 08-0603.03
Expiration Date 5-30-12
By Dity Harris
Miami-Dade Product Control Division

TYPICAL ELEVATION
WITH DOUBLE JAMBS AT 90° OUTSIDE CORNER

Engr: DR. HUMAYOUN FAROOQ
STRUCTURES
FLA. PE # 16557
C.A.N. 3538

SEP 03 2008

AL-FAROOQ CORPORATION
ENGINEERS & PRODUCT DEVELOPMENT
1235 S.W. 87 AVE
MIAMI, FLORIDA 33174
TEL. (305) 264-8100 FAX. (305) 262-6978
COMP-ANL\W08-40YKK

YKK AP AMERICA INC.
332 FIRETOWER ROAD
DUBLIN, GEORGIA 31021
TEL.(478) 277-1955 FAX(478) 277-1978

YHC-300 SSG ALUM CURTAIN WALL SYSTEM (S.M.I.)

revisions:			
no	date	by	description
A	07.25.08		REV. PER BCCO COMMENTS
B	08.14.08		REV. PER BCCO COMMENTS
C	09.02.08		REV. PER BCCO COMMENTS

date: 04-30-08
scale: 1/4"=1'-0"
dr. by: HAMID
chk. by:

drawing no.
W08-40

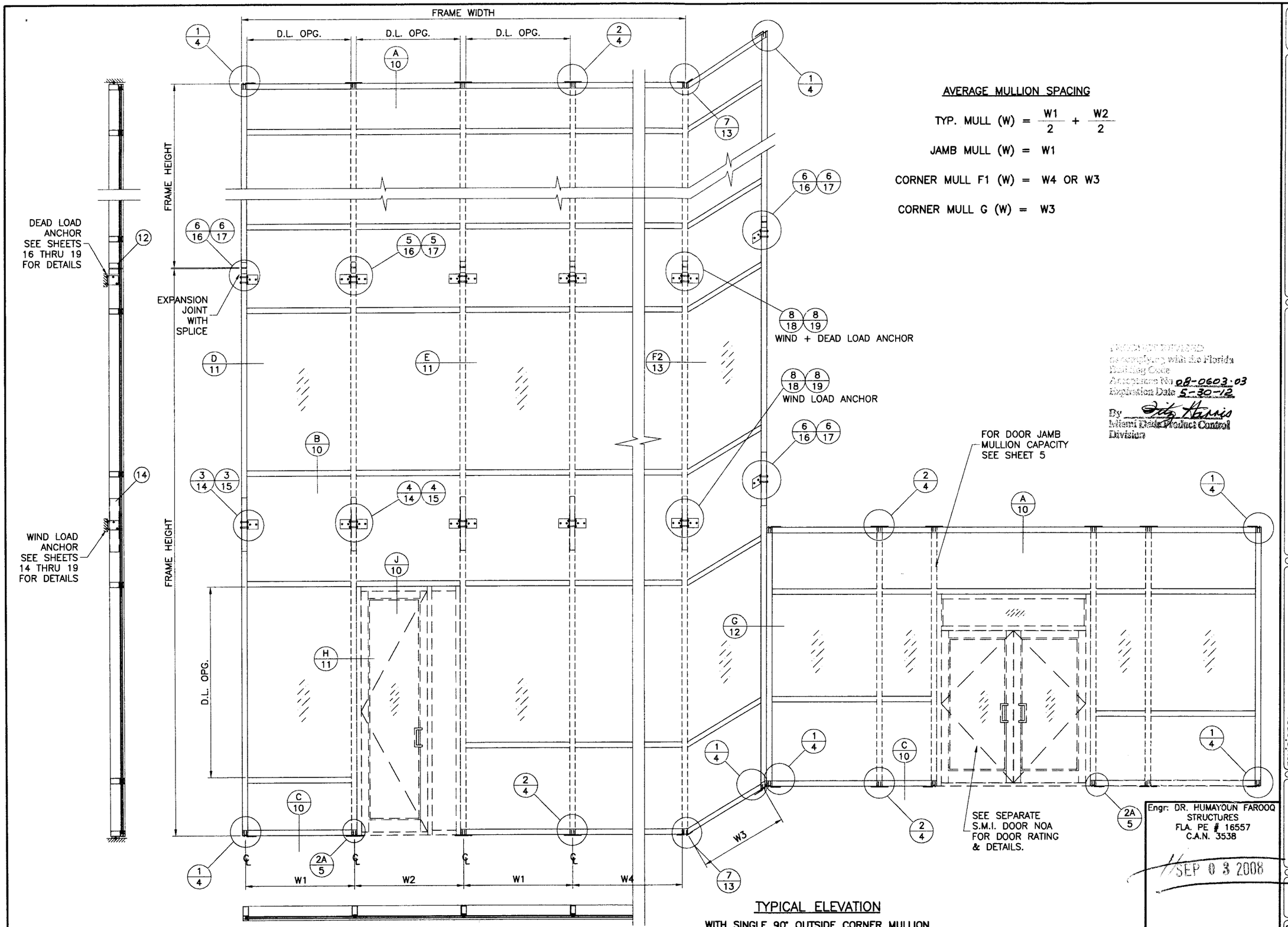

AVERAGE MULLION SPACING

TYP. MULL (W) = $\frac{W1}{2} + \frac{W2}{2}$

JAMB MULL (W) = W1

CORNER MULL F1 (W) = W4 OR W3

CORNER MULL G (W) = W3

TYPICAL ELEVATION

WITH SINGLE 90° OUTSIDE CORNER MULLION

PRODUCT DIVISION
as complying with the Florida Building Code
Acceptance No 08-0603.03
Expiration Date 5-30-12
By [signature]
Miami Dade Product Control Division

Engr: DR. HUMAYOUN FAROOQ
STRUCTURES
FLA. PE # 16557
C.A.N. 3538

SEP 0 3 2008

AL-FAROOQ CORPORATION
ENGINEERS & PRODUCT DEVELOPMENT
1235 S.W. 87 AVE
MIAMI, FLORIDA 33174
TEL. (305) 264-8100 FAX. (305) 262-6978

COMP-ANL\W08-40YKK

YHC-300 SSG ALUM CURTAIN WALL SYSTEM (S.M.I.)

YKK AP AMERICA INC.
332 FIRETOWER ROAD
DUBLIN, GEORGIA 31021
TEL.(478) 277-1955 FAX(478) 277-1978

revisions:

no	date	by	description
C	09.02.08		REV. PER BCCO COMMENTS

date: 04-30-08
scale: 1/4"=1'-0"
dr. by: HAMID
chk. by:

drawing no. W08-40

sheet 2.1 of 22

GLASS LOAD CAPACITY – PSF		
NOMINAL DIMS.		GLASS TYPES 'A' & 'B'
D.L.O. WIDTH	D.L.O. HEIGHT	EXT. (+) INT. (–)
27"	60"	90.0
33"		90.0
39"		90.0
45"		90.0
51"		90.0
57"		90.0
63"		90.0
69"		90.0
27"	66"	90.0
33"		90.0
39"		90.0
45"		90.0
51"		90.0
57"		90.0
63"		90.0
27"	72"	90.0
33"		90.0
39"		90.0
45"		90.0
51"		90.0
57"		90.0
27"	78"	90.0
33"		90.0
39"		90.0
45"		90.0
51"		90.0
27"	84"	90.0
33"		90.0
39"		90.0
45"		90.0
27"	90"	90.0
33"		90.0
39"		90.0
45"		90.0
27"	94–1/2"	90.0
33"		90.0
39"		90.0
45"		90.0
27"	102"	90.0
33"		90.0
39"		90.0
27"	106"	90.0
33"		90.0
39"		90.0

NOTE:
GLASS CAPACITIES ON THIS SHEET
ARE BASED ON
ASTM E1300–02/04 (3 SEC. GUSTS)

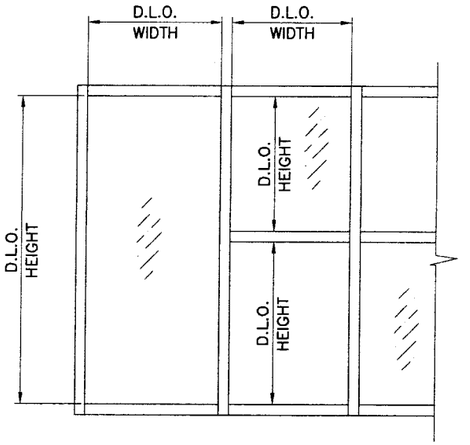

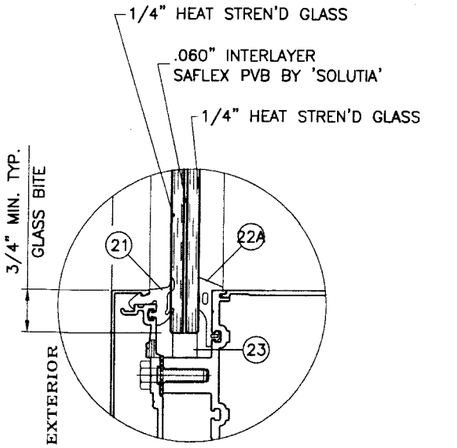

GLASS TYPE 'A'

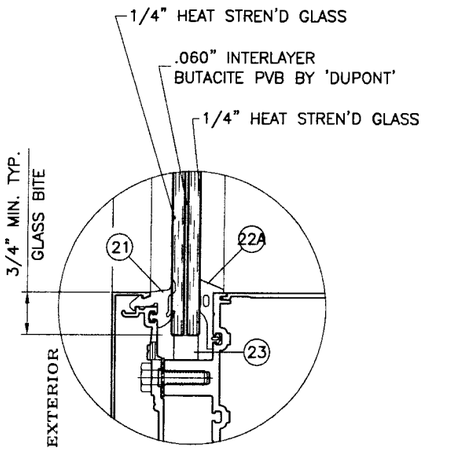

GLASS TYPE 'B'

GLAZING OPTIONS

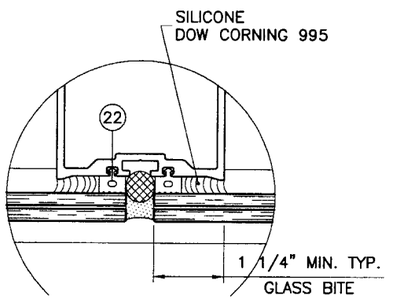

GLAZING DETAIL AT MULLION

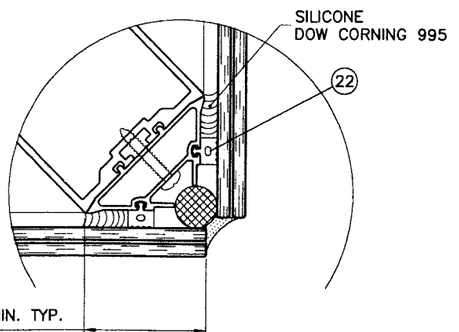

GLAZING DETAIL AT CORNER MULLION

PRODUCT REVISED
as complying with the Florida
Building Code
Acceptance No 08-0603.03
Expiration Date 5-30-12
By Gaty Harris
Miami Dade Product Control
Division

Engr: DR. HUMAYOUN FAROOQ
STRUCTURES
FLA. PE # 16557
C.A.N. 3538
SEP 0 3 2008

AL-FAROOQ CORPORATION
ENGINEERS & PRODUCT DEVELOPMENT
1235 S.W. 87 AVE
MIAMI, FLORIDA 33174
TEL. (305) 264-8100 FAX. (305) 262-6978

COMP-ANL\W08-40YKK

YHC-300 SSG ALUM CURTAIN WALL SYSTEM (S.M.I.)

YKK AP AMERICA INC.
332 FIRETOWER ROAD
DUBLIN, GEORGIA 31021
TEL(478) 277-1955 FAX(478) 277-1978

revisions:			
no	date	by	description
A	07.25.08		REV. PER BCCO COMMENTS
B	08.14.08		NO CHANGE THIS SHEET
C	09.02.08		NO CHANGE THIS SHEET

date: 04-30-08
scale: 3/8" = 1"
dr. by: HAMID
chk. by:

drawing no.
W08-40

ANCHOR 'A'
DIRECTLY INTO CONCRETE
3/8" DIA. KWIK BOLT–3 EXPANSION ANCHOR
(2) PER SIDE
WITH 2–1/2" MIN. EMBED INTO CONCRETE.
2–1/2" MIN. EDGE DIST.
3" MIN. SPACING

ANCHOR 'B'
DIRECTLY INTO CONCRETE
1/2" DIA. KWIK BOLT–3 EXPANSION ANCHOR
(1) PER SIDE
WITH 3–1/2" MIN. EMBED INTO CONCRETE.
3–3/4" MIN. EDGE DIST.
7" MIN. SPACING

ANCHOR 'C'
INTO METAL STRUCTURES (STEEL 1/4" MIN. THICKNESS)
5/16" DRIL–FLEX SELF DRILLING SCREWS
(3) PER SIDE
1/2" MIN. EDGE DIST.
3/4" MIN. SPACING

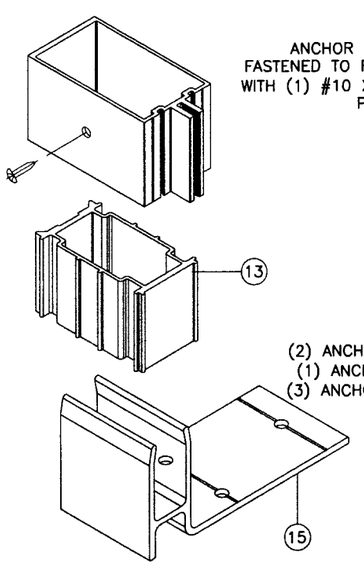

JAMB ANCHOR CLIP
DETAIL '1'

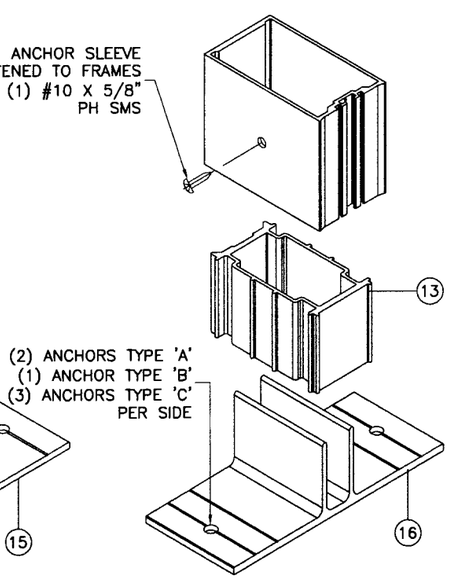

MULLION ANCHOR CLIP
DETAIL '2'

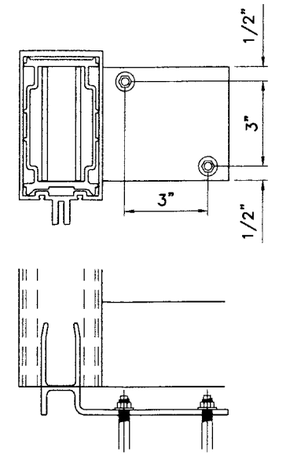

ANCHORS TYPE 'A' & 'B'
JAMB CLIP ANCHORS

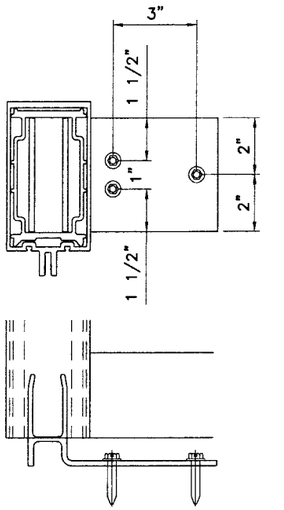

ANCHORS TYPE 'C'
JAMB CLIP ANCHORS

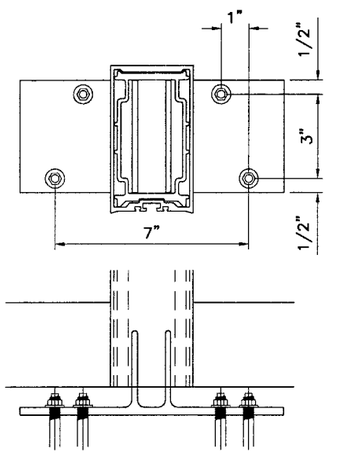

ANCHORS TYPE 'A'
MULLION CLIP ANCHORS

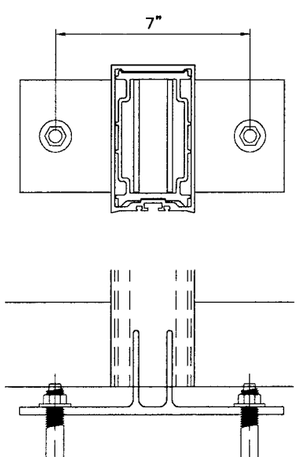

ANCHORS TYPE 'B'
MULLION CLIP ANCHORS

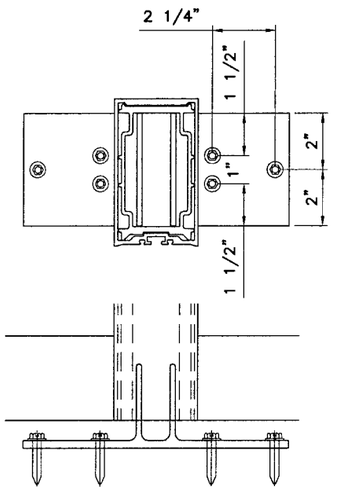

ANCHORS TYPE 'C'
MULLION CLIP ANCHORS

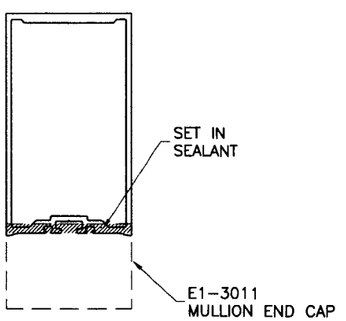

MULLION END CAP
(APPLY BEFORE MULLION ERECTION)

PRODUCT REVISED
as complying with the Florida Building Code
Acceptance No 08-0603.03
Expiration Date 5-30-12
By Pitz Harris
Miami Dade Product Control Division

Engr: DR. HUMAYOUN FAROOQ
STRUCTURES
FLA. PE # 16557
C.A.N. 3538
SEP 03 2008

AL-FAROOQ CORPORATION
ENGINEERS & PRODUCT DEVELOPMENT
1235 S.W. 87 AVE
MIAMI, FLORIDA 33174
TEL. (305) 264-8100 FAX. (305) 262-6978
COMP–ANL\W08–40YKK

YHC–300 SSG ALUM CURTAIN WALL SYSTEM (S.M.I.)

YKK AP AMERICA INC.
332 FIRETOWER ROAD
DUBLIN, GEORGIA 31021
TEL(478) 277–1955 FAX(478) 277–1978

revisions:

no	date	by	description
A	07.25.08		REV. PER BCCO COMMENTS
B	08.14.08		REV. PER BCCO COMMENTS
C	09.02.08		NO CHANGE THIS SHEET

date: 04–30–08
scale: –
dr. by: HAMID
chk. by:

drawing no.
W08–40

JAMB/MULLION LOAD CAPACITY – PSF WITHOUT INTERMEDIATE HORIZONTALS		
NOMINAL DIMS.		JAMB 'J1' MULLION 'M1'
WIDTH (W)	FRAME HEIGHT	EXT. (+) INT. (–)
36"	84"	90.0
39"		90.0
42"		90.0
45"		90.0
48"		90.0
51"		90.0
54"		90.0
57"		90.0
60"		90.0
36"	90"	90.0
39"		90.0
42"		90.0
45"		90.0
48"		90.0
51"		90.0
54"		90.0
57"		90.0
36"	96"	90.0
39"		90.0
42"		90.0
45"		90.0
48"		90.0
51"		90.0
54"		90.0
36"	102"	90.0
39"		90.0
42"		90.0
45"		90.0
48"		90.0
51"		90.0
36"	108"	90.0
39"		90.0
42"		90.0
45"		90.0
48"		90.0
36"	112"	90.0
39"		90.0
42"		90.0
45"		90.0
48"		90.0

SINGLE SPAN TABLES

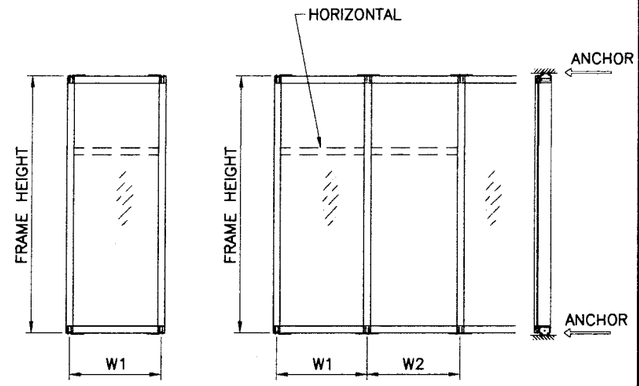

WIDTH (W) = W1 (JAMB)

WIDTH (W) = $\frac{W1 + W2}{2}$

JAMB/MULLION LOAD CAPACITY – PSF WITH INTERMEDIATE HORIZONTALS		
NOMINAL DIMS.		JAMB 'J1' MULLION 'M1'
WIDTH (W)	FRAME HEIGHT	EXT. (+) INT. (–)
36"	84"	90.0
39"		90.0
42"		90.0
45"		90.0
48"		90.0
51"		90.0
54"		90.0
57"		90.0
60"		90.0
36"	90"	90.0
39"		90.0
42"		90.0
45"		90.0
48"		90.0
51"		90.0
54"		90.0
57"		90.0
36"	96"	90.0
39"		90.0
42"		90.0
45"		90.0
48"		90.0
51"		90.0
54"		90.0
36"	102"	90.0
39"		90.0
42"		90.0
45"		90.0
48"		90.0
51"		90.0
36"	108"	90.0
39"		90.0
42"		90.0
45"		90.0
48"		90.0
36"	112"	90.0
39"		90.0
42"		90.0
45"		89.4
48"		83.8

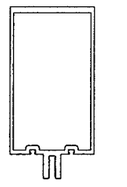

JAMB 'J1'

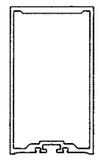

MULLION 'M1'

DOOR JAMB MULLION CAPACITY

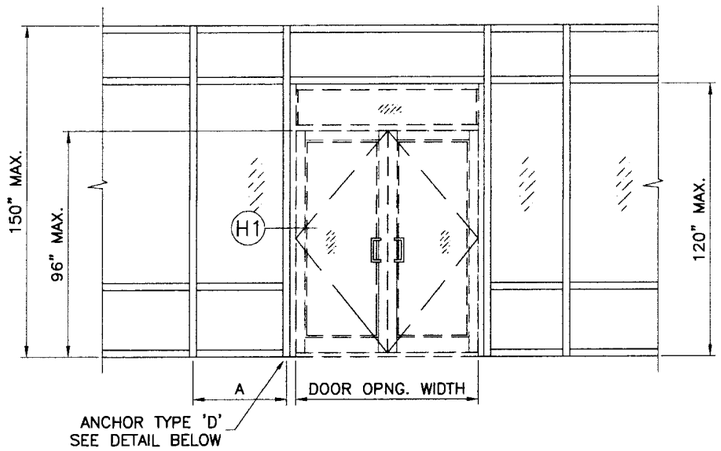

MAX. DOOR OPNG. WIDTH	A/2	Pd – PSF ANCHORS TYPE 'A', 'B' & 'C'
96"	15"	90.0
84"	19"	90.0
72"	23"	90.0

NOTE:
FOR DOOR HEIGHT LESS THAN 96 IN. USE ABOVE TABLE.

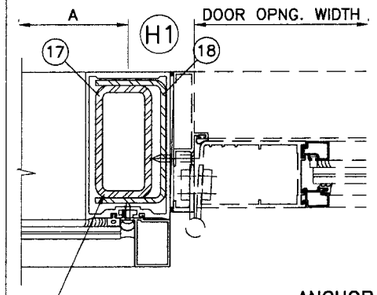

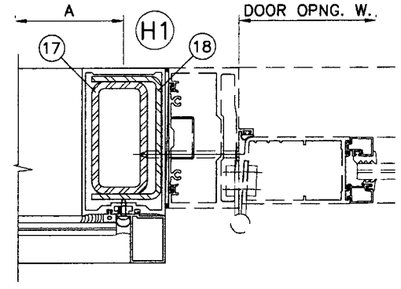

ANCHOR 'D'
DIRECTLY INTO CONCRETE
(1) 5/8" DIA. KWIK BOLT–3 EXPANSION ANCHOR WITH 2–3/4" MIN. EMBED INTO CONCRETE.
7" MIN. EDGE DIST.

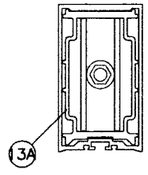

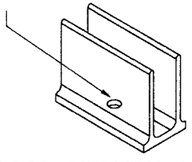

DOOR MULLION ANCHOR CLIP
DETAIL '2A'

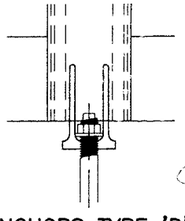

ANCHORS TYPE 'D'

Engr: DR. HUMAYOUN FAROOQ
STRUCTURES
FLA. PE # 16557
C.A.N. 3538

SEP 0 3 2008

PRODUCT REVISED
as complying with the Florida Building Code
Acceptance No 08-0603.03
Expiration Date 5-30-12
By Miami-Dade Product Control Division

AL-FAROOQ CORPORATION
ENGINEERS & PRODUCT DEVELOPMENT
1235 S.W. 87 AVE
MIAMI, FLORIDA 33174
TEL. (305) 264-8100 FAX. (305) 262-6978

COMP–ANL\W08–40YKK

YHC–300 SSG ALUM CURTAIN WALL SYSTEM (S.M.I.)

YKK AP AMERICA INC.
332 FIRETOWER ROAD
DUBLIN, GEORGIA 31021
TEL.(478) 277–1955 FAX(478) 277–1978

revisions:		
no	date	by description
A	07.25.08	REV. PER BCCO COMMENTS
B	08.14.08	REV. PER BCCO COMMENTS
C	09.02.08	NO CHANGE. THIS SHEET

date: 04–30–08
scale: –
dr. by: HAMID
chk. by:

drawing no.
W08–40

sheet 5 of 22

JAMB/MULLION LOAD CAPACITY – PSF WITH INTERMEDIATE HORIZONTALS		
NOMINAL DIMS.		JAMB 'J1' MULLION 'M2'
WIDTH (W)	FRAME HEIGHT	EXT. (+) INT. (–)
36"	96"	90.0
39"		90.0
42"		90.0
45"		90.0
48"		90.0
51"		90.0
54"		90.0
57"		90.0
60"		90.0
36"	102"	90.0
39"		90.0
42"		90.0
45"		90.0
48"		90.0
51"		90.0
54"		90.0
57"		90.0
60"		90.0
36"	108"	90.0
39"		90.0
42"		90.0
45"		90.0
48"		90.0
51"		90.0
54"		90.0
57"		90.0
60"		90.0
36"	114"	90.0
39"		90.0
42"		90.0
45"		90.0
48"		90.0
51"		90.0
54"		90.0
57"		90.0
60"		90.0
36"	120"	90.0
39"		90.0
42"		90.0
45"		90.0
48"		90.0
51"		90.0
54"		90.0
57"		90.0
60"		90.0

JAMB/MULLION LOAD CAPACITY – PSF WITH INTERMEDIATE HORIZONTALS		
NOMINAL DIMS.		JAMB 'J1' MULLION 'M2'
WIDTH (W)	FRAME HEIGHT	EXT. (+) INT. (–)
36"	126"	90.0
39"		90.0
42"		90.0
45"		90.0
48"		90.0
51"		90.0
54"		90.0
57"		90.0
36"	132"	90.0
39"		90.0
42"		90.0
45"		90.0
48"		90.0
51"		90.0
54"		90.0
36"	138"	90.0
39"		90.0
42"		90.0
45"		90.0
48"		90.0
51"		90.0
36"	144"	90.0
39"		90.0
42"		90.0
45"		90.0
48"		90.0
36"	150"	90.0
39"		90.0
42"		90.0
45"		90.0
48"		90.0

SINGLE SPAN TABLES

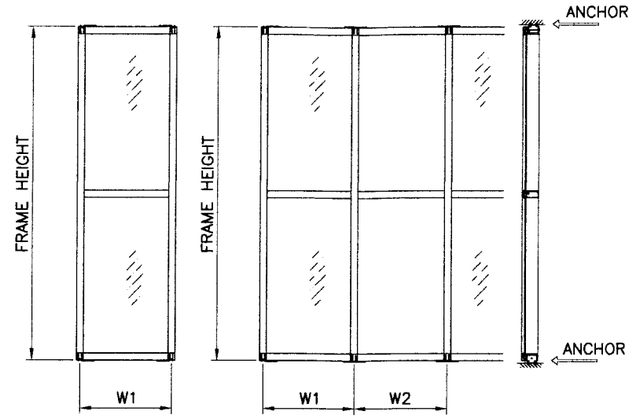

WIDTH (W) = W1 (JAMB) WIDTH (W) = $\frac{W1 + W2}{2}$

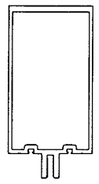

JAMB 'J1'

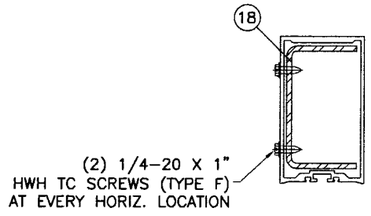

MULLION 'M2'

REINFORCING LENGTH = FRAME HEIGHT – 12 IN.

Engr: DR. HUMAYOUN FAROOQ
STRUCTURES
FLA. PE # 16557
C.A.N. 3538

SEP 0 3 2008

PRODUCT REVISED
as complying with the Florida Building Code
Acceptance No 08-0603.03
Expiration Date 5-30-12
By Cathy Harris
Miami Dade Product Control Division

AL-FAROOQ CORPORATION
ENGINEERS & PRODUCT DEVELOPMENT
1235 S.W. 87 AVE
MIAMI, FLORIDA 33174
TEL. (305) 264-8100 FAX. (305) 262-6978
COMP-ANL\W08-40YKK

YKK AP AMERICA INC.
332 FIRETOWER ROAD
DUBLIN, GEORGIA 31021
TEL.(478) 277-1955 FAX(478) 277-1978

YHC-300 SSG ALUM CURTAIN WALL SYSTEM (S.M.I.)

revisions:

no	date	by	description
A	07.25.08		REV. PER BCCO COMMENTS
B	08.14.08		NO CHANGE THIS SHEET
C	09.02.08		NO CHANGE THIS SHEET

date: 04-30-08
scale: –
dr. by: HAMID
chk. by:

drawing no.
W08–40

UN-REINFORCED JAMB & MULLION TWIN SPAN TABLES

MULLION LOAD CAPACITY - PSF TWIN SPANS		
NOMINAL DIMS.		WITHOUT REINF.
AVG. MULL SPACING	SPAN = L	EXT. (+) INT.(-)
30"	120"	90.0
36"		90.0
42"		90.0
48"		90.0
54"		90.0
60"		90.0
30"	126"	90.0
36"		90.0
42"		90.0
48"		90.0
54"		90.0
30"	132"	90.0
36"		90.0
42"		90.0
48"		90.0
54"		90.0
30"	138"	90.0
36"		90.0
42"		90.0
48"		90.0
30"	144"	90.0
36"		90.0
42"		90.0
48"		90.0
30"	150"	90.0
36"		90.0
42"		90.0
48"		81.2

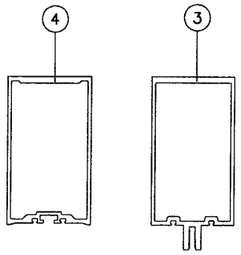

MULLION JAMB

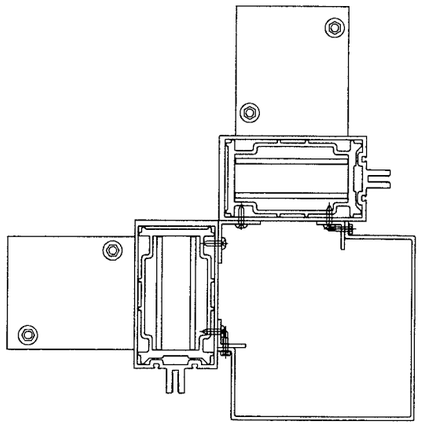

CORNER MULLION WITH HEAD AND SILL ANCHORS

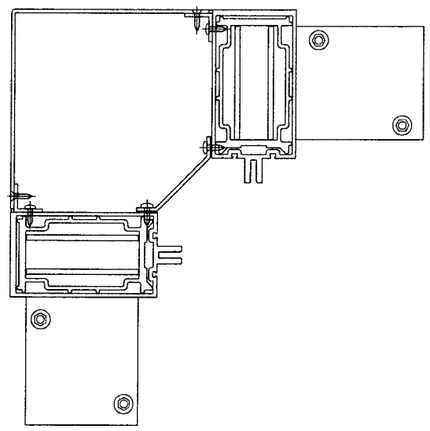

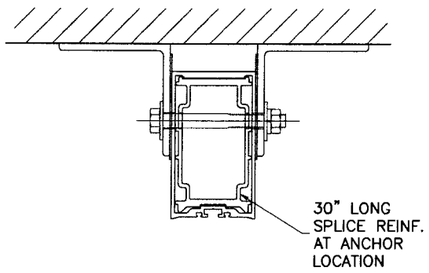

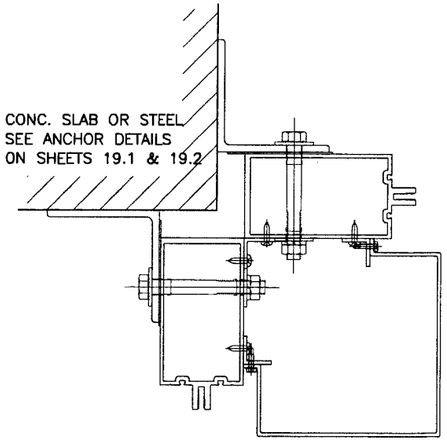

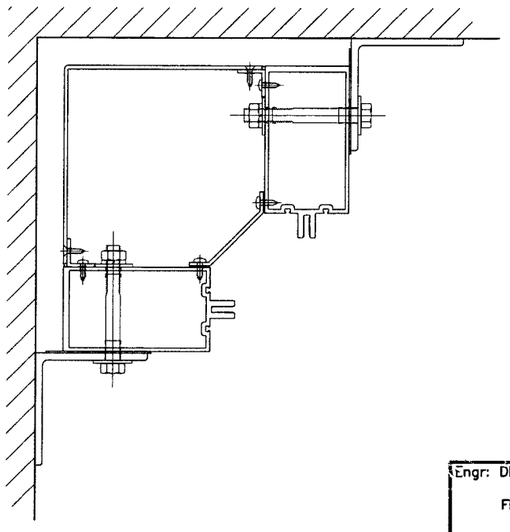

CORNER MULLION WITH INTERMEDIATE ANCHOR

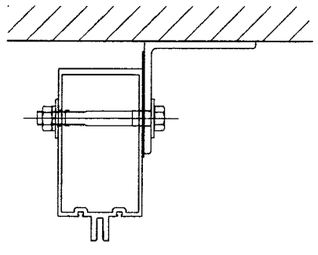

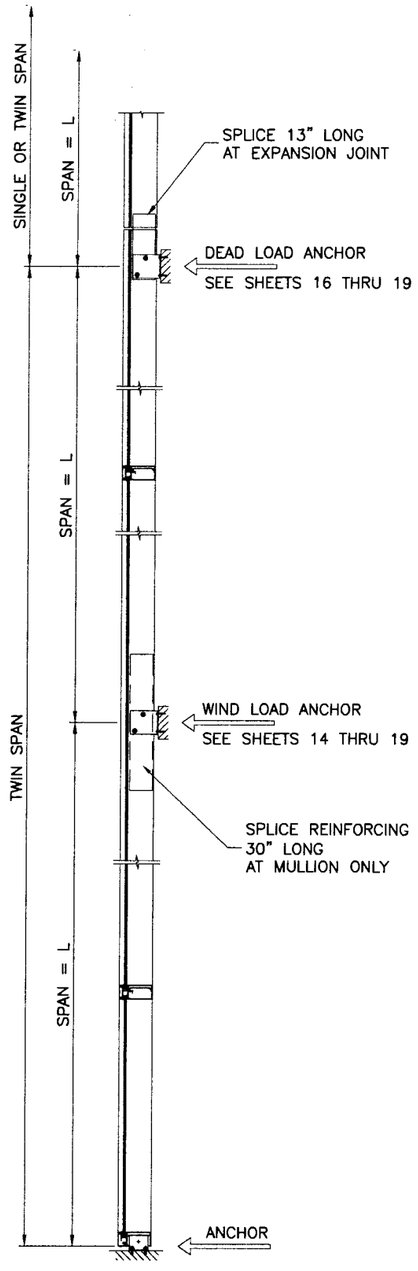

NOTE:
THIS TABLE IS APPLICABLE FOR TWIN SPAN WITHOUT EXPANSION JOINT.
FOR SINGLE SPAN CAPACITY SEE TABLES ON SHEETS 5 & 6.

Engr: DR. HUMAYOUN FAROOQ
STRUCTURES
FLA. PE # 16557
C.A.N. 3538

SEP 0 8 2008

PRODUCT REVISED
as complying with the Florida Building Code
Acceptance No 08-0603.03
Expiration Date 5-30-12
By Dirk Harris
Miami Dade Product Control Division

AL-FAROOQ CORPORATION
ENGINEERS & PRODUCT DEVELOPMENT
1235 S.W. 87 AVE
MIAMI, FLORIDA 33174
TEL. (305) 264-8100 FAX. (305) 262-6978
COMP-ANL\W08-40YKK

YHC-300 SSG ALUM CURTAIN WALL SYSTEM (S.M.I.)

YKK AP AMERICA INC.
332 FIRETOWER ROAD
DUBLIN, GEORGIA 31021
TEL(478) 277-1955 FAX(478) 277-1978

revisions:			
no	date	by	description
A	07.25.08		REV. PER BCCO COMMENTS
B	08.14.08		REV. PER BCCO COMMENTS
C	09.02.08		REV. PER BCCO COMMENTS

date: 04-30-08
scale: -
dr. by: HAMID
chk. by:

drawing no.
W08-40

CORNER MULLION W/O REINFORCING
SINGLE SPAN WITH OR WITHOUT HORIZONTAL

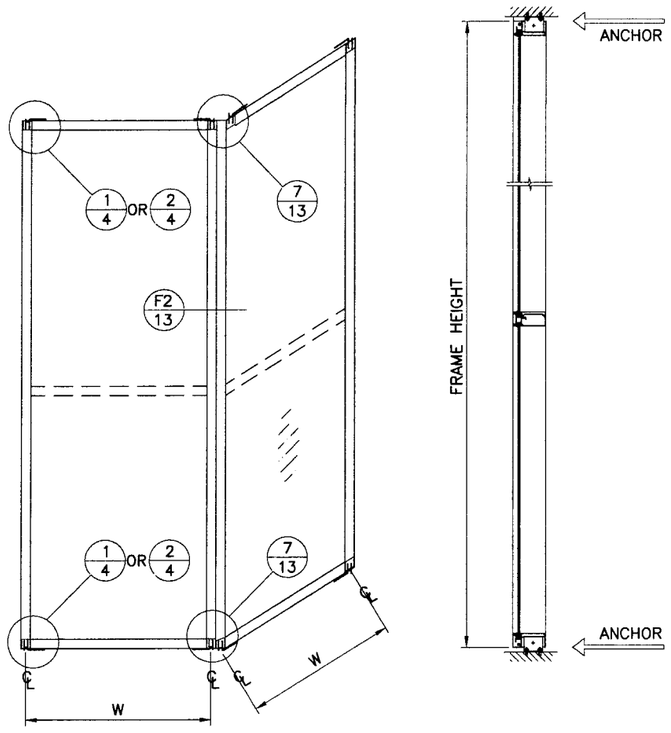

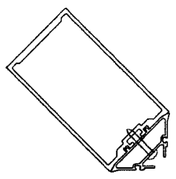

CORNER MULLION

WIDTH–W INCHES	FRAME HEIGHT INCHES	DESIGN LOAD CAPACITY PSF
43	120	90.0
48	120	82.0
54	120	72.9
60	120	65.6

CORNER MULLION WITH REINFORCING
SINGLE SPAN WITH OR WITHOUT HORIZONTAL

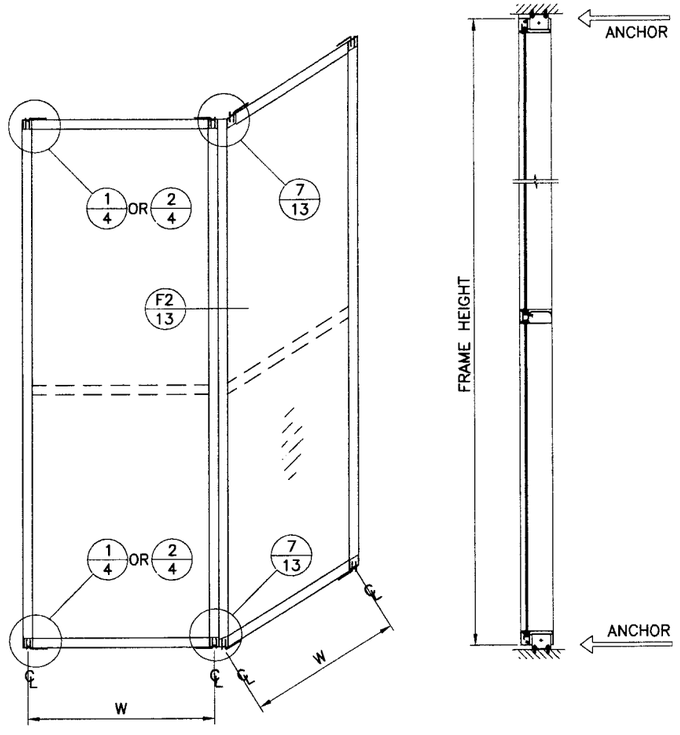

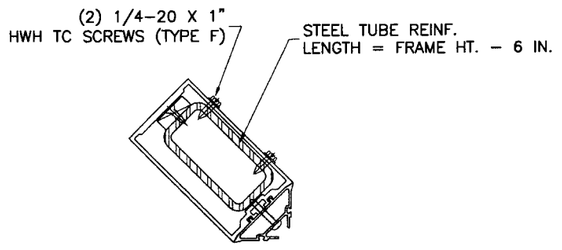

CORNER MULLION
W/ STEEL REINF.

WIDTH–W INCHES	FRAME HEIGHT INCHES	DESIGN LOAD CAPACITY PSF
48	150	90.0
52	138	90.0
60	120	90.0

NOTE:

USE 'F' ANCHOR CLIP DETAIL (1/4) AT JAMB AND
'T' ANCHOR CLIP DETAIL (2/4) AT MULLION

Engr: DR. HUMAYOUN FAROOQ
STRUCTURES
FLA. PE # 16557
C.A.N. 3538

SEP 0 3 2008

PRODUCT REVISED
as complying with the Florida Building Code
Acceptance No 08-0603.03
Expiration Date 5-30-12
By Zity Harris
Miami Dade Product Control Division

AL-FAROOQ CORPORATION
ENGINEERS & PRODUCT DEVELOPMENT
1235 S.W. 87 AVE
MIAMI, FLORIDA 33174
TEL. (305) 264-8100 FAX. (305) 262-6978

COMP–ANL\W08–40YKK

YHC–300 SSG ALUM CURTAIN WALL SYSTEM (S.M.I.)

YKK AP AMERICA INC.
332 FIRETOWER ROAD
DUBLIN, GEORGIA 31021
TEL.(478) 277–1955 FAX(478) 277–1978

revisions:			
no	date	by	description
A	07.25.08		REV. PER BCCO COMMENTS
B	08.14.08		REV. PER BCCO COMMENTS
C	09.02.08		REV. PER BCCO COMMENTS

date: 04–30–08
scale: –
dr. by: HAMID
chk. by:

drawing no.
W08–40

CORNER MULLION W/ ALUM REINFORCING
TWIN SPAN WITH HORIZONTAL

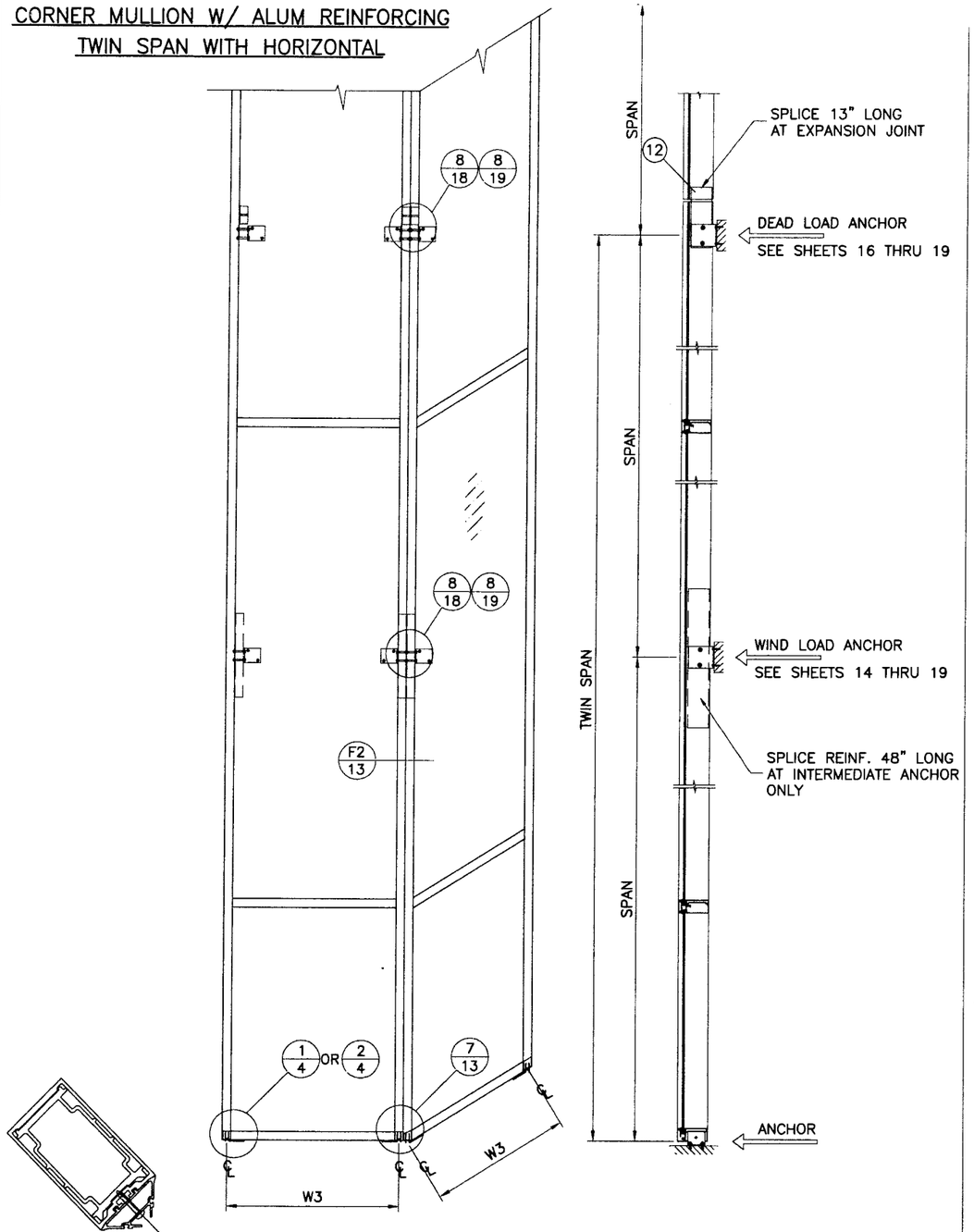

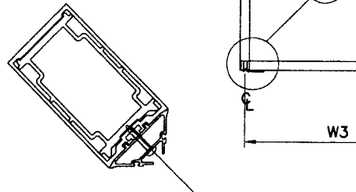

CORNER MULLION
W/ ALUM REINF.

W3	SPAN	Pd
48 IN.	150 IN.	83 PSF
44 IN.	150 IN.	90 PSF
60 IN.	120 IN.	90 PSF

CORNER MULLION WITH STEEL REINFORCING
TWIN SPAN WITH HORIZONTAL

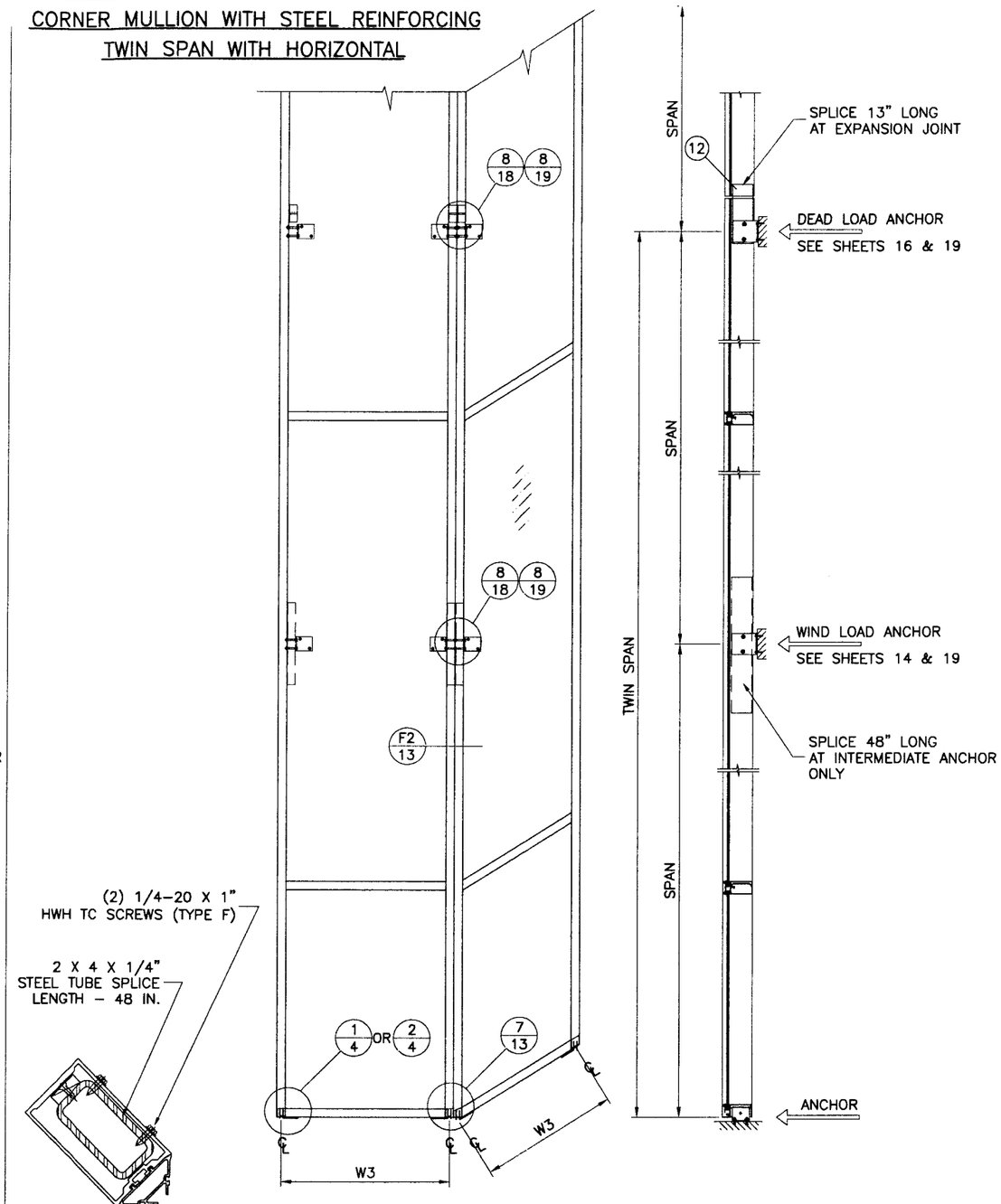

CORNER MULLION
W/ STEEL REINF.

W3	SPAN	Pd
48 IN.	150 IN.	90 PSF

NOTE:

USE 'F' ANCHOR CLIP DETAIL (1/4) AT JAMB AND
'T' ANCHOR CLIP DETAIL (2/4) AT MULLION

Engr: DR. HUMAYOUN FAROOQ
STRUCTURES
FLA. PE # 16557
C.A.N. 3538

SEP 0 3 2008

PRODUCT REVISED
as complying with the Florida Building Code
Acceptance No 08-0603.03
Expiration Date 5-30-12
By Miami Dade Product Control Division

AL-FAROOQ CORPORATION
ENGINEERS & PRODUCT DEVELOPMENT
1235 S.W. 87 AVE
MIAMI, FLORIDA 33174
TEL. (305) 264-8100 FAX. (305) 262-6978
COMP-ANL\W08-40YKK

YKK AP AMERICA INC.
332 FIRETOWER ROAD
DUBLIN, GEORGIA 31021
TEL(478) 277-1955 FAX(478) 277-1978

YHC-300 SSG ALUM CURTAIN WALL SYSTEM (S.M.I.)

revisions:

no	date	by	description
A	07.25.08		REV. PER BCCO COMMENTS
B	08.14.08		REV. PER BCCO COMMENTS
C	09.02.08		NO CHANGE THIS SHEET

date: 04-30-08
scale: -
dr. by: HAMID
chk. by:

drawing no.
W08-40

sheet 9 of 22

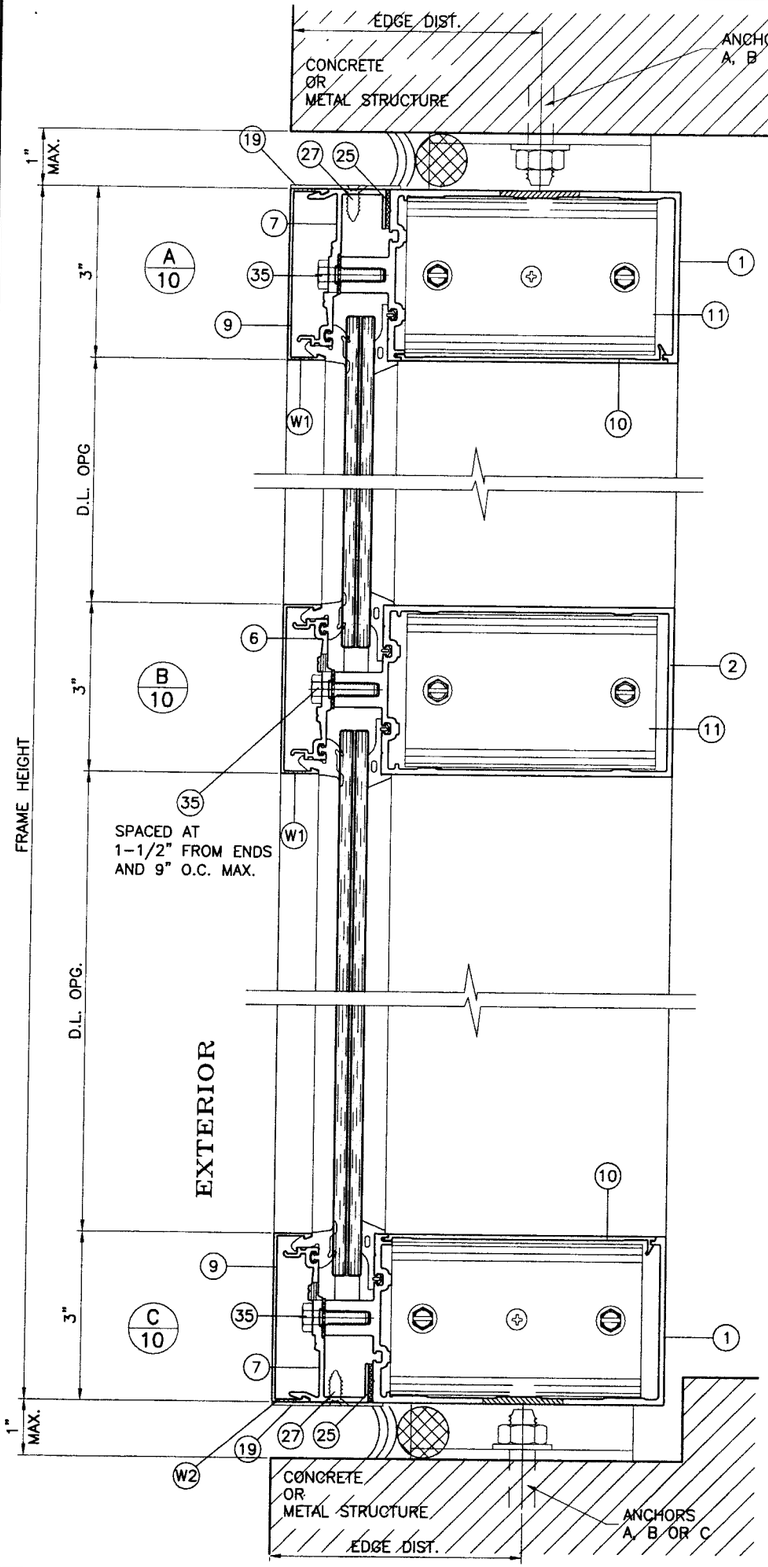

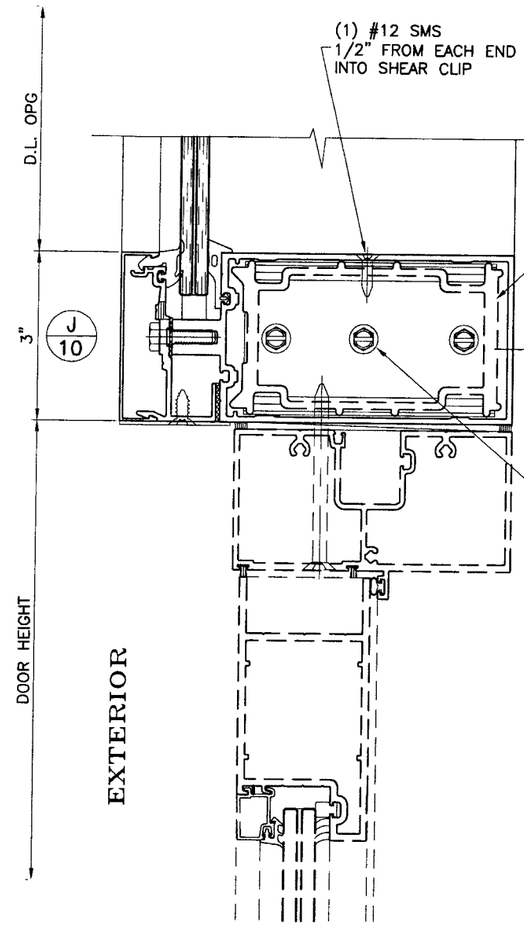

CONCRETE AND METAL STRUCTURE NOT BY YKK AMERICA INC. MUST SUSTAIN LOADS IMPOSED BY GLAZING SYSTEM AND TRANSFER THEM TO THE BUILDING STRUCTURE.

LIMIT MAX. DESIGN LOADS FOR HORIZONTAL ABOVE DOOR AS FOLLOWS		
	DESIGN LOAD	
HORIZ. SPAN MAX.	W/O SPLICE REINF	W/ SPLICE REINF.
97-3/4"	63.6 PSF	90 PSF

WEEPHOLES:

W1 = 5/16" DIA. WEEP HOLES TWO PER D.L. OPNG. AT 1/3 POINTS FROM VERTICALS

W2 = 5/16" DIA. WEEP HOLES THREE PER LITE AT 3" FROM VERTICALS AND CENTER OF D.L. OPNG.

Engr: DR. HUMAYOUN FAROOQ
STRUCTURES
FLA. PE # 16557
C.A.N. 3538

SEP 0 3 2008

PRODUCT REVISED as complying with the Florida Building Code
Acceptance No 08-0603.03
Expiration Date 5-30-12
By Miami Dade Product Control Division

AL-FAROOQ CORPORATION
ENGINEERS & PRODUCT DEVELOPMENT
1235 S.W. 87 AVE
MIAMI, FLORIDA 33174
TEL. (305) 264-8100 FAX. (305) 262-6978

COMP-ANL\W08-40YKK

YHC-300 SSG ALUM CURTAIN WALL SYSTEM (S.M.I.)

YKK AP AMERICA INC.
332 FIRETOWER ROAD
DUBLIN, GEORGIA 31021
TEL(478) 277-1955 FAX(478) 277-1978

revisions:			
no	date	by	description
A	07.25.08		REV. PER BCCO COMMENTS
B	08.14.08		REV. PER BCCO COMMENTS
C	09.02.08		NO CHANGE THIS SHEET

date: 04-30-08
scale: 3/8" = 1"
dr. by: HAMID
chk. by:

drawing no.
W08-40

sheet 10 of 22

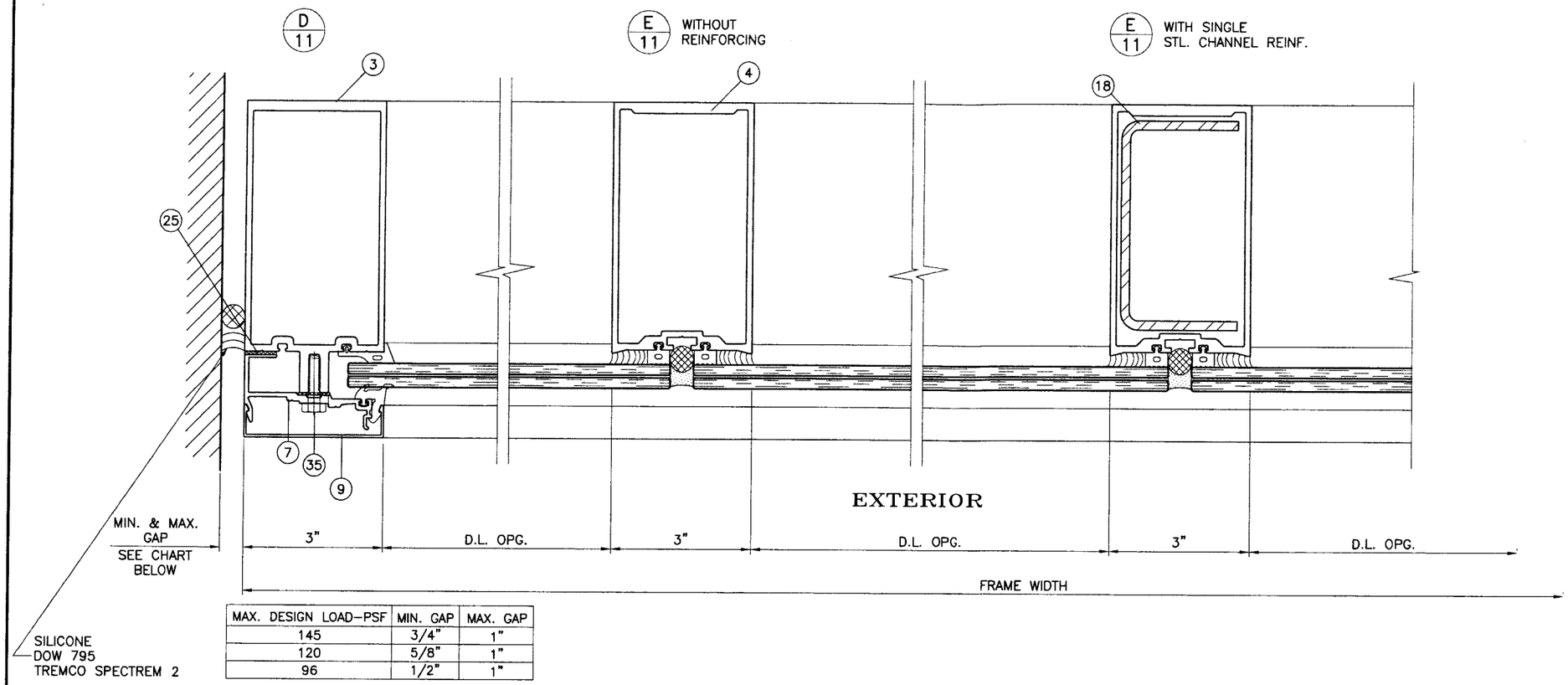

MAX. DESIGN LOAD–PSF	MIN. GAP	MAX. GAP
145	3/4"	1"
120	5/8"	1"
96	1/2"	1"

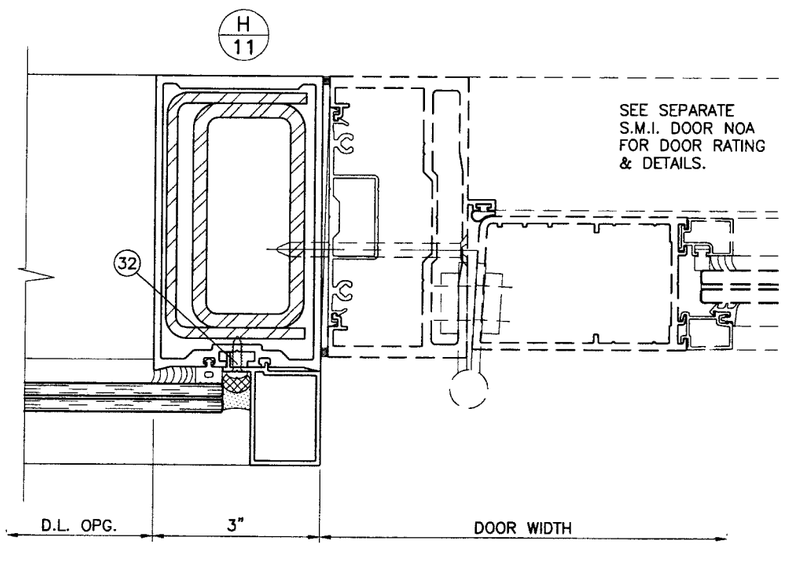

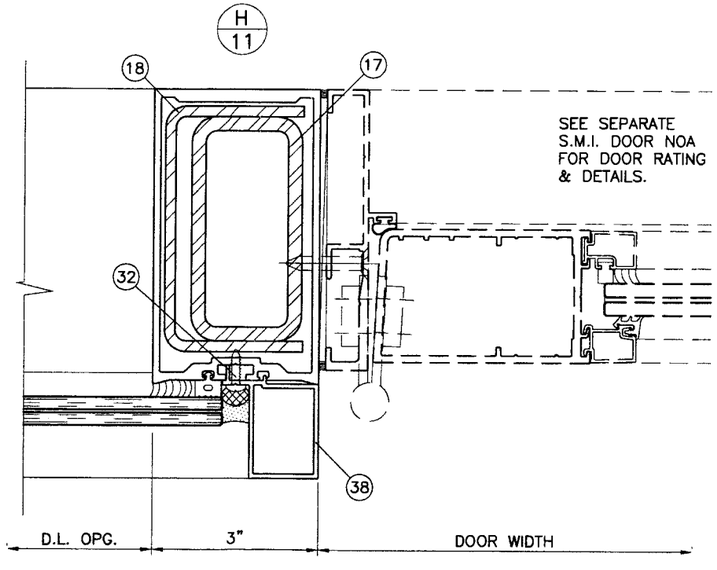

Engr: DR. HUMAYOUN FAROOQ
STRUCTURES
FLA. PE # 16557
C.A.N. 3538

SEP 03 2008

PRODUCT REVISED
as complying with the Florida Building Code
Acceptance No 08-0603.03
Expiration Date 5-30-12
By Otto Harris
Miami Dade Product Control Division

afc
AL-FAROOQ CORPORATION
ENGINEERS & PRODUCT DEVELOPMENT
1235 S.W. 87 AVE
MIAMI, FLORIDA 33174
TEL. (305) 264-8100 FAX. (305) 262-6978
COMP-ANL\W08-40YKK

YHC-300 SSG ALUM CURTAIN WALL SYSTEM (S.M.I.)

YKK AP AMERICA INC.
332 FIRETOWER ROAD
DUBLIN, GEORGIA 31021
TEL(478) 277-1955 FAX(478) 277-1978

revisions:

no	date	by	description
A	07.25.08		REV. PER BCCO COMMENTS
B	08.14.08		REV. PER BCCO COMMENTS
C	09.02.08		NO CHANGE THIS SHEET

date: 04-30-08
scale: 3/8" = 1"
dr. by: HAMID
chk. by:

drawing no.
W08-40

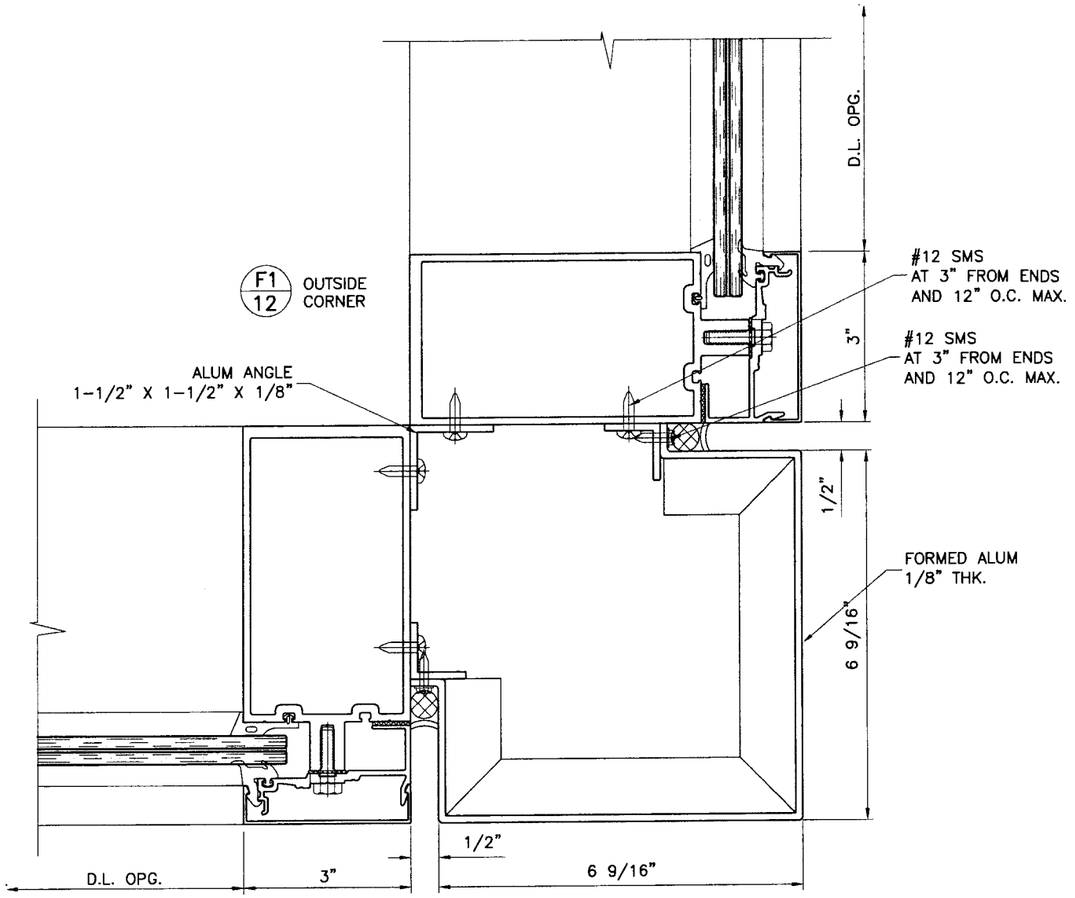

FOR MULLION CAPACITY
SINGLE SPAN SEE SHEETS 5 & 6
TWIN SPANS SEE SHEET 7

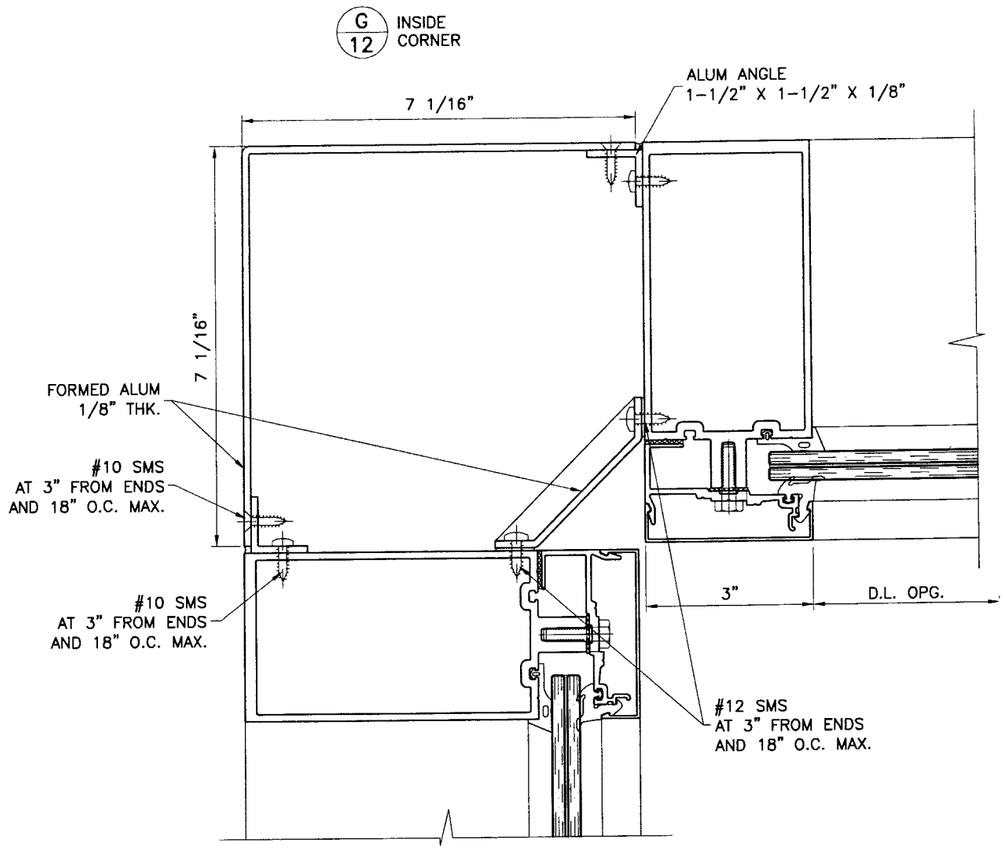

FOR MULLION CAPACITY
SINGLE SPAN SEE SHEETS 5 & 6
TWIN SPANS SEE SHEET 7

Engr. DR. HUMAYOUN FAROOQ
STRUCTURES
FLA. PE # 16557
C.A.N. 3538

SEP 0 3 2008

PRODUCT REVISED
as complying with the Florida
Building Code
Acceptance No 08-0603.03
Expiration Date 5-30-12
By
Miami-Dade Product Control
Division

AL-FAROOQ CORPORATION
ENGINEERS & PRODUCT DEVELOPMENT
1235 S.W. 87 AVE
MIAMI, FLORIDA 33174
TEL. (305) 264-8100 FAX. (305) 262-6978
COMP-ANL\W08-40YKK

YHC-300 SSG ALUM CURTAIN WALL SYSTEM (S.M.I.)

YKK AP AMERICA INC.
332 FIRETOWER ROAD
DUBLIN, GEORGIA 31021
TEL.(478) 277-1955 FAX(478) 277-1978

revisions:			
no	date	by	description
A	07.25.08		REV. PER BCCO COMMENTS
B	08.14.08		REV. PER BCCO COMMENTS
C	09.02.08		NO CHANGE THIS SHEET

date: 04-30-08
scale: 3/8" = 1"
dr. by: HAMID
chk. by:

drawing no.
W08-40

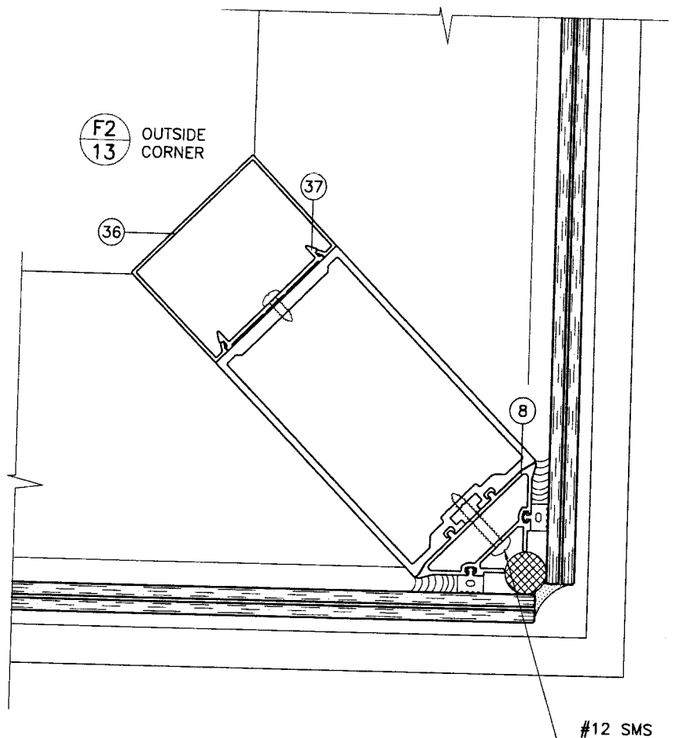

FOR MULLION CAPACITY
SINGLE SPAN SEE SHEET 8
TWIN SPANS SEE SHEET 9

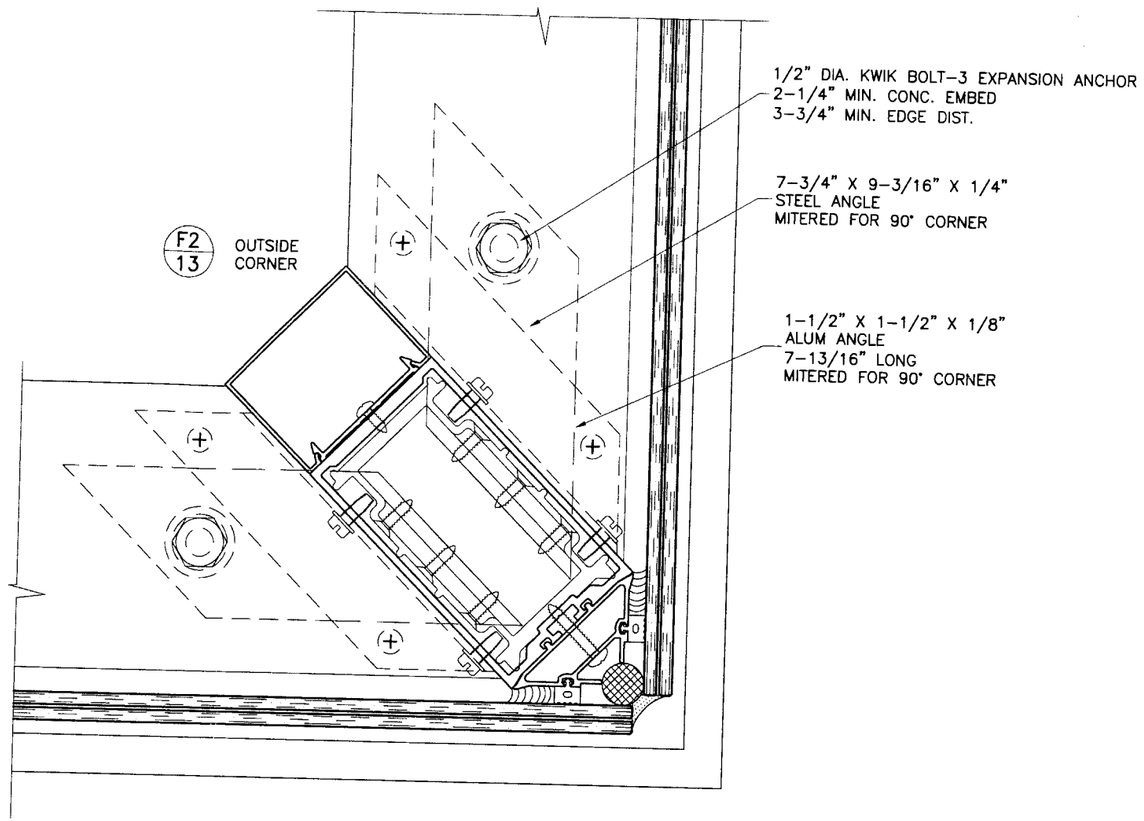

CORNER MULLION ANCHORS
HEAD/SILL
DETAIL '7'

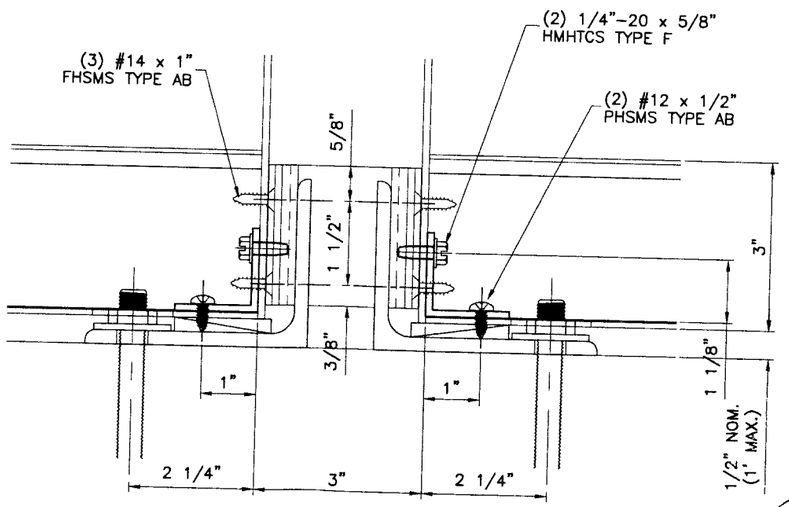

CORNER MULLION ANCHORS
FRONT VIEW

Engr: DR. HUMAYOUN FAROOQ
STRUCTURES
FLA. PE # 16557
C.A.N. 3538

SEP 03 2008

PRODUCT REVISED
as complying with the Florida
Building Code
Acceptance No 08-0603-03
Expiration Date 5-30-12
By Miami Dade Product Control
Division

afc
AL-FAROOQ CORPORATION
ENGINEERS & PRODUCT DEVELOPMENT
1235 S.W. 87 AVE
MIAMI, FLORIDA 33174
TEL. (305) 264-8100 FAX. (305) 262-6978
COMP-ANL\W08-40YKK

YHC-300 SSG ALUM CURTAIN WALL SYSTEM (S.M.I.)

YKK ap®
YKK AP AMERICA INC.
332 FIRETOWER ROAD
DUBLIN, GEORGIA 31021
TEL(478) 277-1955 FAX(478) 277-1978

revisions:

no	date	by	description
A	07.25.08		REV. PER BCCO COMMENTS
B	08.14.08		NO CHANGE THIS SHEET
C	09.02.08		NO CHANGE THIS SHEET

date: 04-30-08
scale: 3/8" = 1"
dr. by: HAMID
chk. by:

drawing no.
W08-40

MAX. DESIGN LOAD –PSF DUE TO ANCHOR CAPACITY EXT.(+) & INT.(–)		
NOMINAL DIMS.		ANCHOR TYPE 'A'
WIDTH (W)	FRAME HEIGHT	
30"	108"	90.0
36"		90.0
42"		90.0
48"		90.0
54"		90.0
60"		90.0
30"	114"	90.0
36"		90.0
42"		90.0
48"		90.0
54"		90.0
60"		90.0
30"	120"	90.0
36"		90.0
42"		90.0
48"		90.0
54"		90.0
60"		90.0
30"	126"	90.0
36"		90.0
42"		90.0
48"		90.0
54"		90.0
30"	132"	90.0
36"		90.0
42"		90.0
48"		90.0
54"		90.0
30"	138"	90.0
36"		90.0
42"		90.0
48"		90.0
30"	144"	90.0
36"		90.0
42"		90.0
48"		90.0
30"	150"	90.0
36"		90.0
42"		90.0
48"		90.0

NOTE:
FOR SLABS LESS THAN 8 INCHES IN THICKNESS ANCHORS TO BE DESIGNED ON JOB TO JOB BASIS. THE DESIGN TO BE REVIEWED BY AUTHORITY HAVING JURISDICTION.

FOR MULLION ADJACENT TO 90° CORNER (SHEET 8 & 9) REDUCE ANCHOR CAPACITY BY 30%.

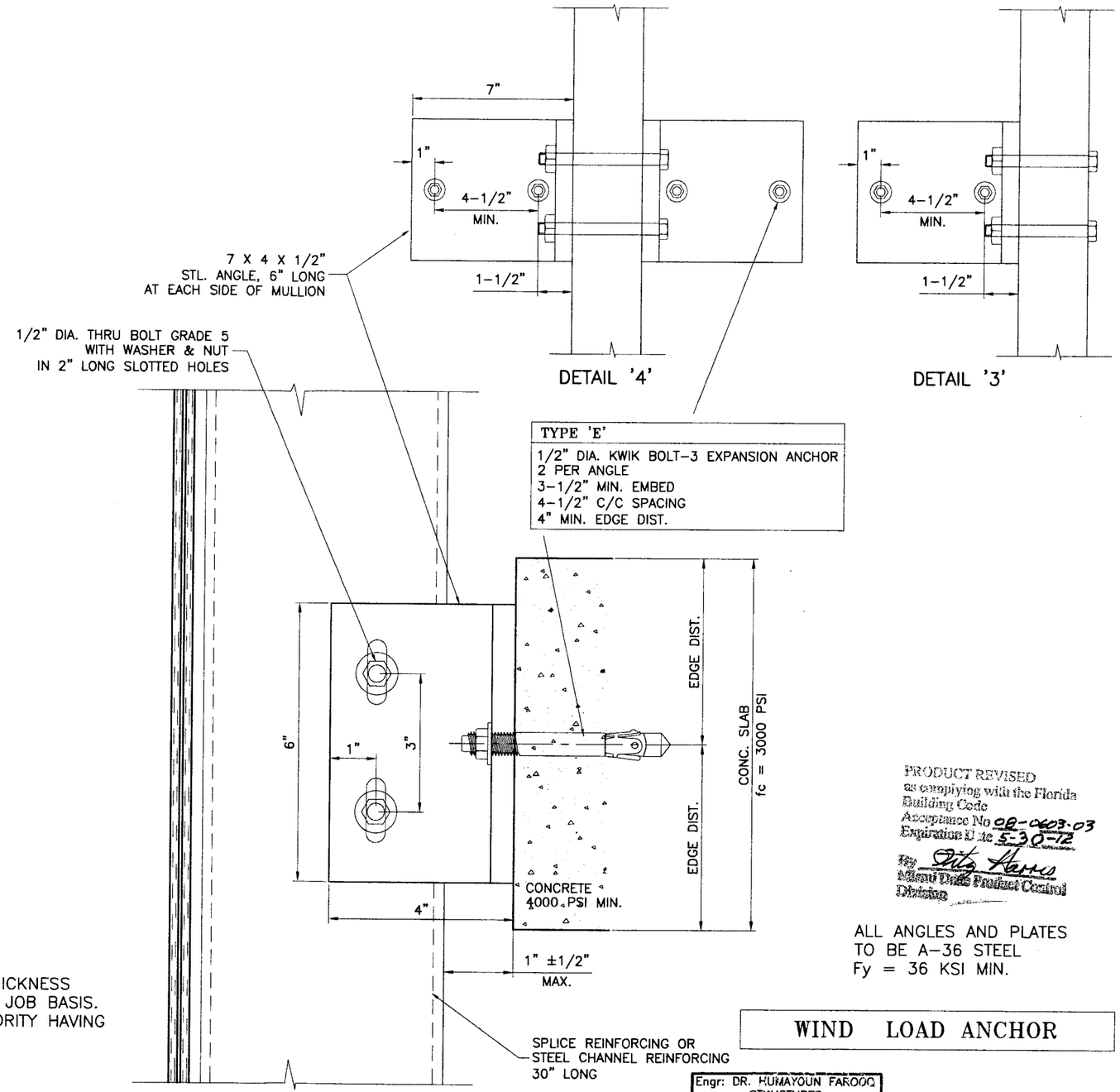

INTERMEDIATE ANCHORS
DETAIL '4' AT CENTER MULLION
DETAIL '3' AT JAMB MULLION

ANCHORS INTO CONCRETE

PRODUCT REVISED
as complying with the Florida
Building Code
Acceptance No 08-0603.03
Expiration Date 5-30-12
By Miami Dade Product Control
Division

ALL ANGLES AND PLATES
TO BE A–36 STEEL
Fy = 36 KSI MIN.

WIND LOAD ANCHOR

Engr: DR. HUMAYOUN FAROOQ
STRUCTURES
FLA. PE # 16557
C.A.N. 3338

SEP 03 2008

AL-FAROOQ CORPORATION
ENGINEERS & PRODUCT DEVELOPMENT
1235 S.W. 87 AVE
MIAMI, FLORIDA 33174
TEL. (305) 264-8100 FAX. (305) 262-6978

COMP–ANL\W08–40YKK

YHC–300 SSG ALUM CURTAIN WALL SYSTEM (S.M.I.)

YKK AP AMERICA INC.
332 FIRETOWER ROAD
DUBLIN, GEORGIA 31021
TEL.(478) 277–1955 FAX(478) 277–1978

revisions:			
no	date	by	description
A	07.25.08		REV. PER BCCO COMMENTS
B	08.14.08		REV. PER BCCO COMMENTS
C	09.02.08		NO CHANGE THIS SHEET

date: 04–30–08
scale: 3/8" = 1"
dr. by: HAMID
chk. by:

drawing no.
W08–40

MAX. DESIGN LOAD = 90 PSF

EXTERIOR

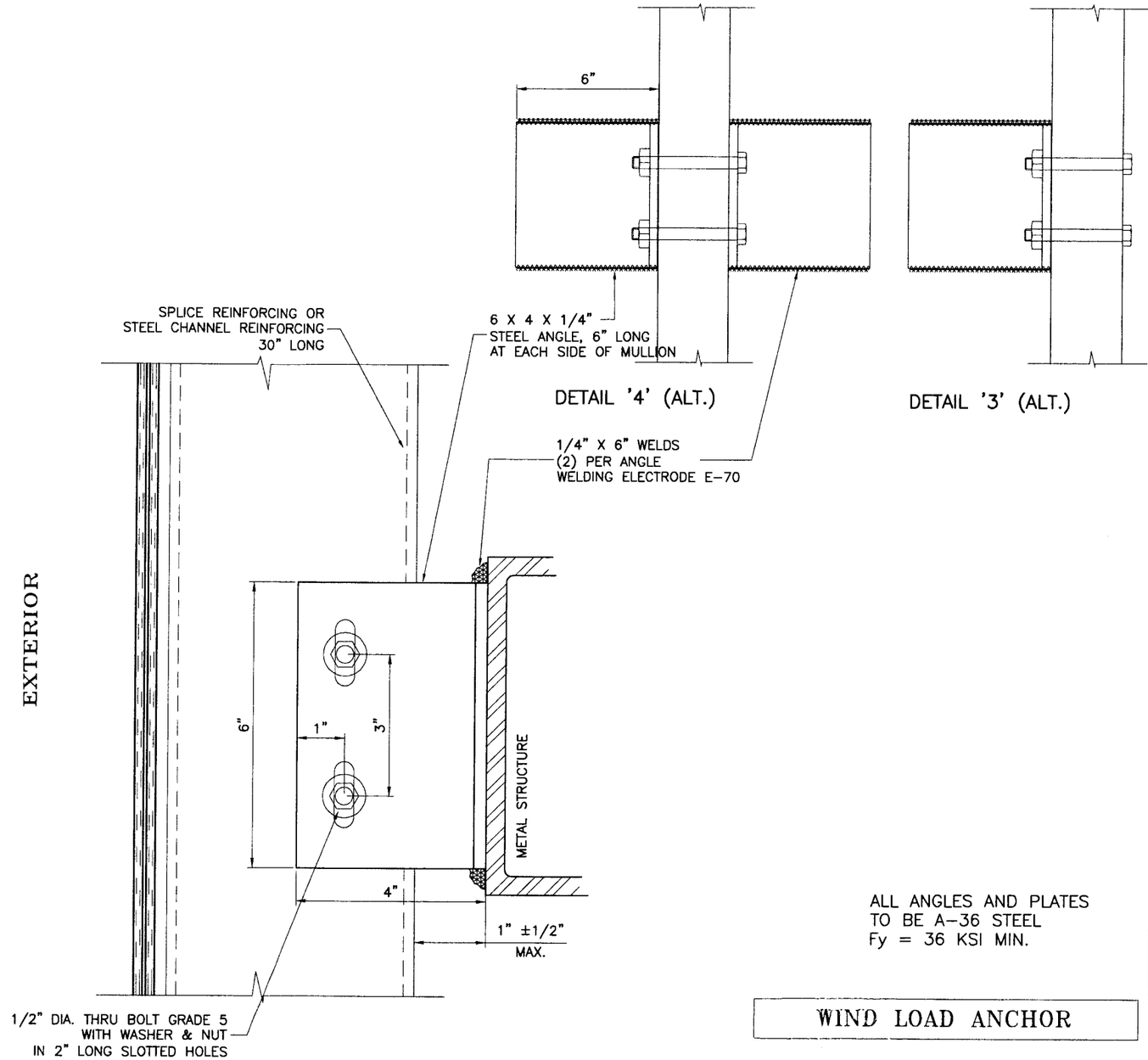

ALL ANGLES AND PLATES
TO BE A-36 STEEL
Fy = 36 KSI MIN.

WIND LOAD ANCHOR

INTERMEDIATE ANCHORS
DETAIL '4' ALT. AT CENTER MULLION
DETAIL '3' ALT. AT JAMB MULLION

ANCHORS INTO METAL STRUCTURES
COMMERCIAL STEEL – 1/4" MIN. THICKNESS

Engr: DR. HUMAYOUN FAROOQ
STRUCTURES
FLA. PE # 16557
C.A.N. 3538

SEP 0 9 2008

PRODUCT REVISED
as complying with the Florida
Building Code
Acceptance No 08-0603.03
Expiration Date 5-30-12
By Gaby Harris
Miami Dade Product Control
Division

AL-FAROOQ CORPORATION
ENGINEERS & PRODUCT DEVELOPMENT
1235 S.W. 87 AVE
MIAMI, FLORIDA 33174
TEL. (305) 264-8100 FAX. (305) 262-6978
COMP-ANL\W08-40YKK

YKK AP AMERICA INC.
332 FIRETOWER ROAD
DUBLIN, GEORGIA 31021
TEL.(478) 277-1955 FAX(478) 277-1978

YHC-300 SSG ALUM CURTAIN WALL SYSTEM (S.M.I.)

revisions:

no	date	by	description
A	07.25.08		REV. PER BCCO COMMENTS
B	08.14.08		REV. PER BCCO COMMENTS
C	09.02.08		NO CHANGE THIS SHEET

date: 04-30-08
scale: 3/8" = 1"
dr. by: HAMID
chk. by:

drawing no.
W08-40

MAX. DESIGN LOAD -PSF DUE TO ANCHOR CAPACITY EXT.(+) & INT.(-)		
NOMINAL DIMS.		ANCHOR
WIDTH (W)	FRAME HEIGHT	TYPE 'A'
30"	108"	90.0
36"		90.0
42"		90.0
48"		90.0
54"		90.0
60"		90.0
30"	114"	90.0
36"		90.0
42"		90.0
48"		90.0
54"		90.0
60"		85.2
30"	120"	90.0
36"		90.0
42"		90.0
48"		90.0
54"		90.0
60"		81.0
30"	126"	90.0
36"		90.0
42"		90.0
48"		90.0
54"		85.7
30"	132"	90.0
36"		90.0
42"		90.0
48"		90.0
54"		81.8
30"	138"	90.0
36"		90.0
42"		90.0
48"		88.0
30"	144"	90.0
36"		90.0
42"		90.0
48"		84.3
30"	150"	90.0
36"		90.0
42"		90.0
48"		81.0

NOTE:
FOR SLABS LESS THAN 8 INCHES IN THICKNESS ANCHORS TO BE DESIGNED ON JOB TO JOB BASIS. THE DESIGN TO BE REVIEWED BY AUTHORITY HAVING JURISDICTION.

FOR MULLION ADJACENT TO 90° CORNER (SHEET 8 & 9) REDUCE ANCHOR CAPACITY BY 30%.

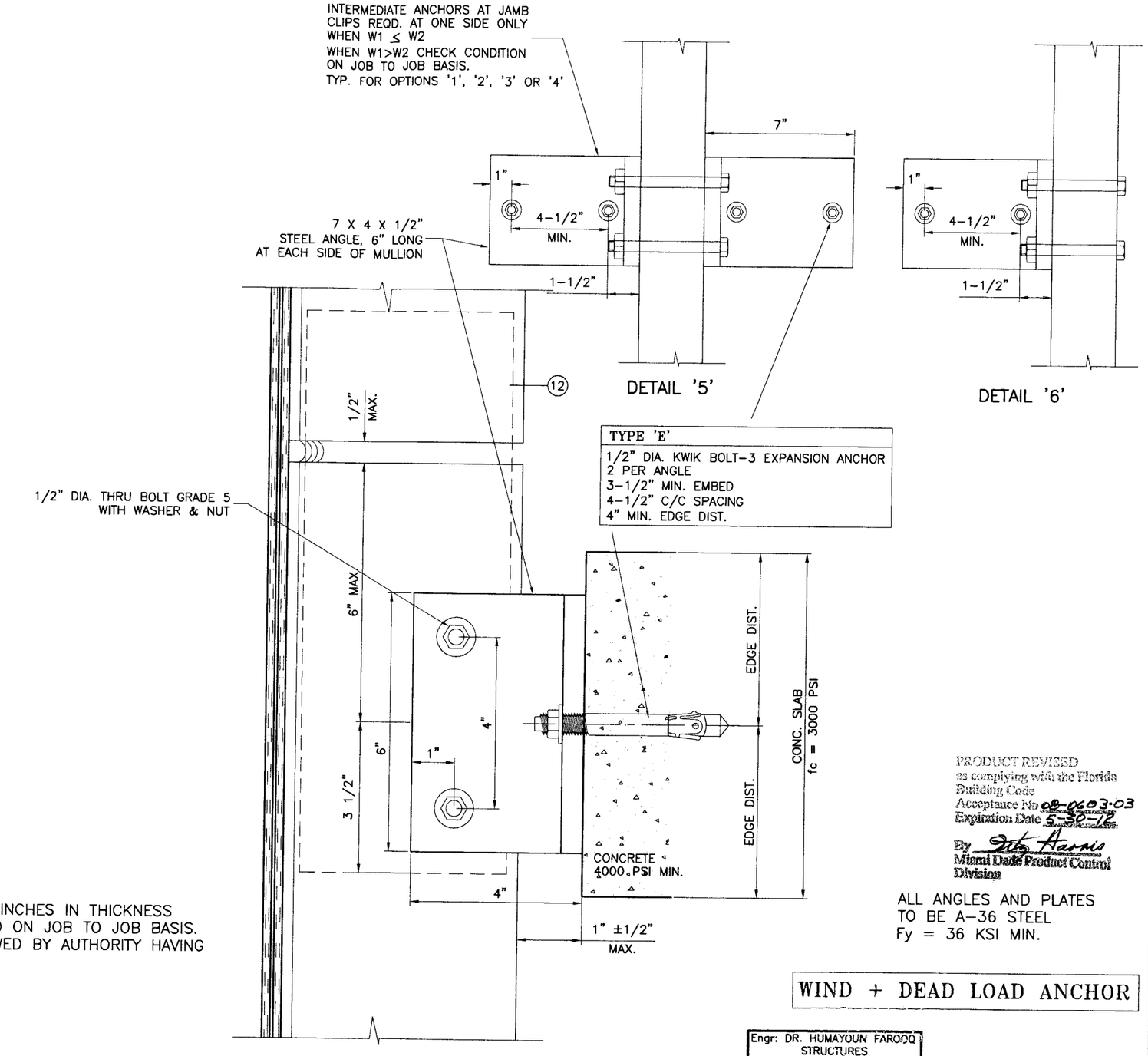

INTERMEDIATE ANCHORS
DETAIL '5' AT CENTER MULLION
DETAIL '6' AT JAMB MULLION

ANCHORS INTO CONCRETE

PRODUCT REVISED
as complying with the Florida Building Code
Acceptance No 08-0603.03
Expiration Date 5-30-12
By Pete Harris
Miami Dade Product Control Division

ALL ANGLES AND PLATES TO BE A-36 STEEL
Fy = 36 KSI MIN.

WIND + DEAD LOAD ANCHOR

Engr: DR. HUMAYOUN FAROOQ
STRUCTURES
FLA. PE # 16557
C.A.N. 3538
SEP 0 3 2008

AL-FAROOQ CORPORATION
ENGINEERS & PRODUCT DEVELOPMENT
1235 S.W. 87 AVE
MIAMI, FLORIDA 33174
TEL. (305) 264-8100 FAX. (305) 262-6978

COMP-ANL\W08-40YKK

YHC-300 SSG ALUM CURTAIN WALL SYSTEM (S.M.I.)

YKK AP AMERICA INC.
332 FIRETOWER ROAD
DUBLIN, GEORGIA 31021
TEL.(478) 277-1955 FAX(478) 277-1978

revisions:

no	date	by	description
A	07.25.08		REV. PER BCCO COMMENTS
B	08.14.08		REV. PER BCCO COMMENTS
C	09.02.08		NO CHANGE THIS SHEET

date: 04-30-08
scale: 3/8" = 1"
dr. by: HAMID
chk. by:

drawing no.
W08-40

sheet 16 of 22

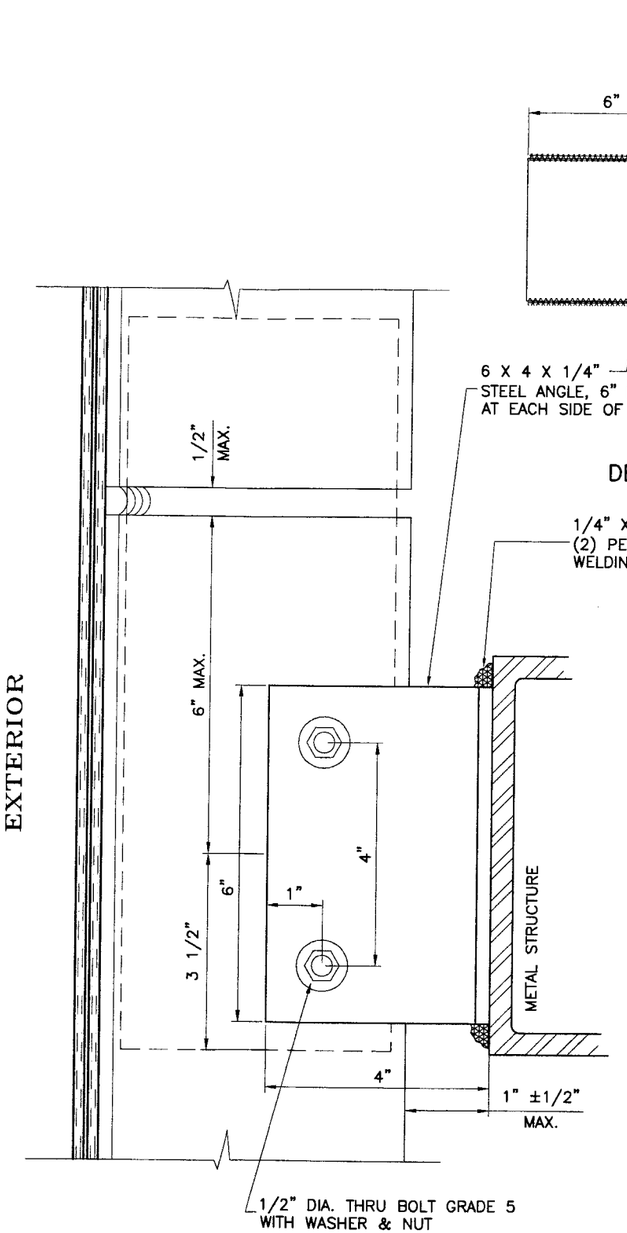

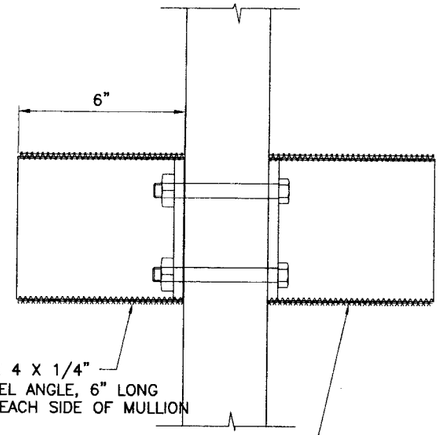

DETAIL '5' (ALT.)

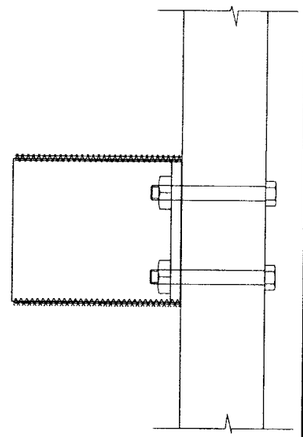

DETAIL '6' (ALT.)

MAX. DESIGN LOAD = 90 PSF

PRODUCT REVISED
as complying with the Florida
Building Code
Acceptance No 08-0603.03
Expiration Date 5-30-12
By Miami Dade Product Control
Division

ALL ANGLES AND PLATES
TO BE A-36 STEEL
Fy = 36 KSI MIN.

WIND + DEAD LOAD ANCHOR

INTERMEDIATE ANCHORS
DETAIL '5' (ALT.) AT CENTER MULLION
DETAIL '6' (ALT.) AT JAMB MULLION

ANCHORS INTO METAL STRUCTURES
COMMERCIAL STEEL – 1/4" MIN. THICKNESS

Engr: DR. HUMAYOUN FAROOQ
STRUCTURES
FLA. PE # 16557
C.A.N. 3538

SEP 03 2008

AL-FAROOQ CORPORATION
ENGINEERS & PRODUCT DEVELOPMENT
1235 S.W. 87 AVE
MIAMI, FLORIDA 33174
TEL. (305) 264-8100 FAX. (305) 262-6978

COMP-ANL\W08-40YKK

YHC-300 SSG ALUM CURTAIN WALL SYSTEM (S.M.I.)

YKK AP AMERICA INC.
332 FIRETOWER ROAD
DUBLIN, GEORGIA 31021
TEL.(478) 277-1955 FAX(478) 277-1978

revisions:			
no	date	by	description
A	07.25.08		REV. PER BCCO COMMENTS
B	08.14.08		REV. PER BCCO COMMENTS
C	09.02.08		NO CHANGE THIS SHEET

date: 04-30-08
scale: 3/8" = 1"
dr. by: HAMID
chk. by:

drawing no.
W08-40

sheet 17 of 22

MAX. SPAN INCHES	MAX. DESIGN LOAD CAPACITY PSF
150	68
120	85
114	90

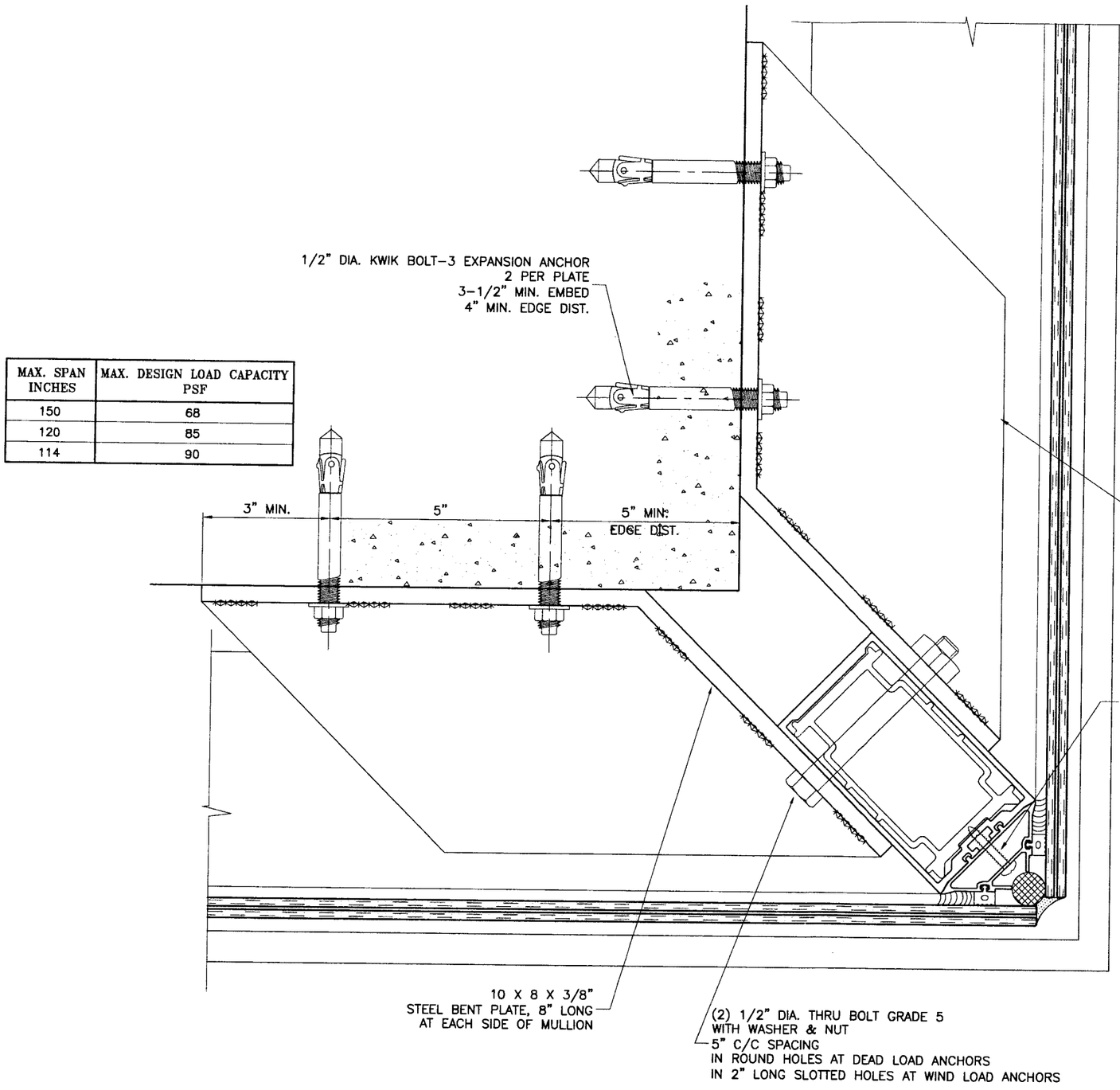

CORNER MULLION ANCHORS
DEATIL '8'

ANCHORS INTO CONCRETE

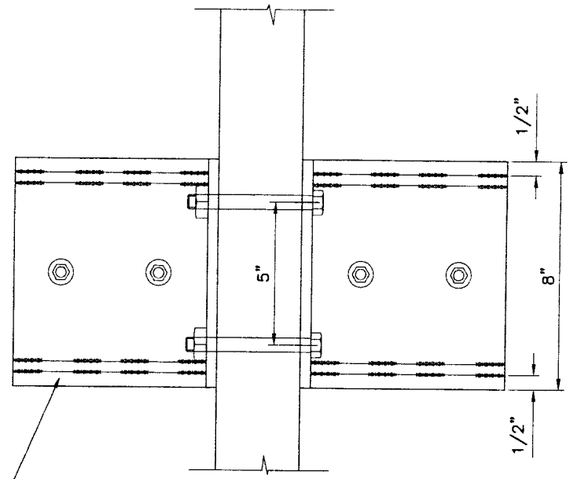

CORNER MULLION
FRONT VIEW

PRODUCT REVISED
as complying with the Florida
Building Code
Acceptance No 08-0603.03
Expiration Date 5-30-12
By Sidy Harris
Miami Dade Product Control
Division

NOTE:
FOR SLABS LESS THAN 8 INCHES IN THICKNESS ANCHORS TO BE DESIGNED ON JOB TO JOB BASIS. THE DESIGN TO BE REVIEWED BY AUTHORITY HAVING JURISDICTION.

ALL ANGLES AND PLATES
TO BE A-36 STEEL
Fy = 36 KSI MIN.

WIND LOAD ANCHOR

WIND + DEAD LOAD ANCHOR

Engr: DR. HUMAYOUN FAROOQ
STRUCTURES
FLA. PE # 16557
C.A.N. 3538

SEP 0 3 2008

AL-FAROOQ CORPORATION
ENGINEERS & PRODUCT DEVELOPMENT
1235 S.W. 87 AVE
MIAMI, FLORIDA 33174
TEL. (305) 264-8100 FAX. (305) 262-6978
COMP-ANL\W08-40YKK

YKK AP AMERICA INC.
332 FIRETOWER ROAD
DUBLIN, GEORGIA 31021
TEL.(478) 277-1955 FAX(478) 277-1978

YHC-300 SSG ALUM CURTAIN WALL SYSTEM (S.M.I.)

revisions: no	date	by	description
A	07.25.08		REV. PER BCCO COMMENTS
B	08.14.08		REV. PER BCCO COMMENTS
C	09.02.08		REV. PER BCCO COMMENTS

date: 04-30-08
scale: 3/8" = 1"
dr. by: HAMID
chk. by:

drawing no.
W08-40

MAX. DESIGN LOAD = 90 PSF

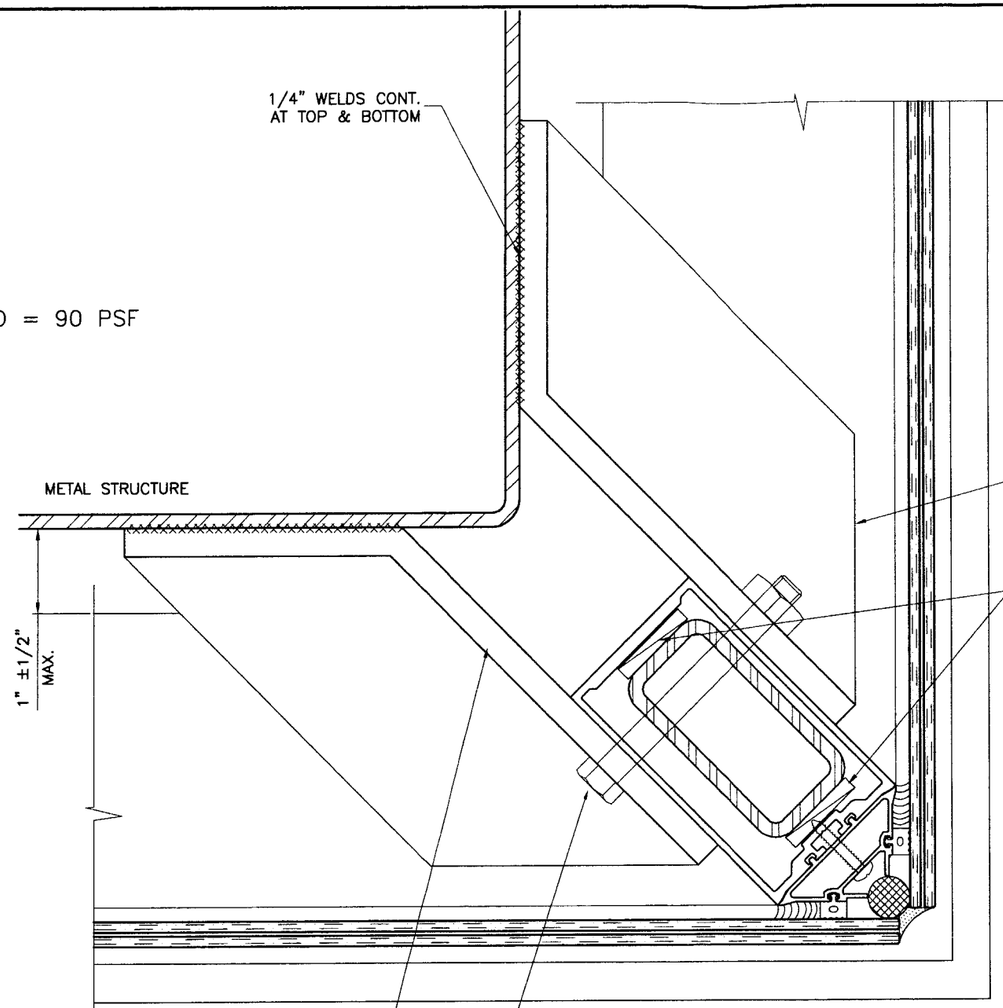

CORNER MULLION ANCHORS
DETAIL '8' (ALT.)

ANCHORS INTO METAL STRUCTURES
1/4" MIN. THICKNESS STEEL

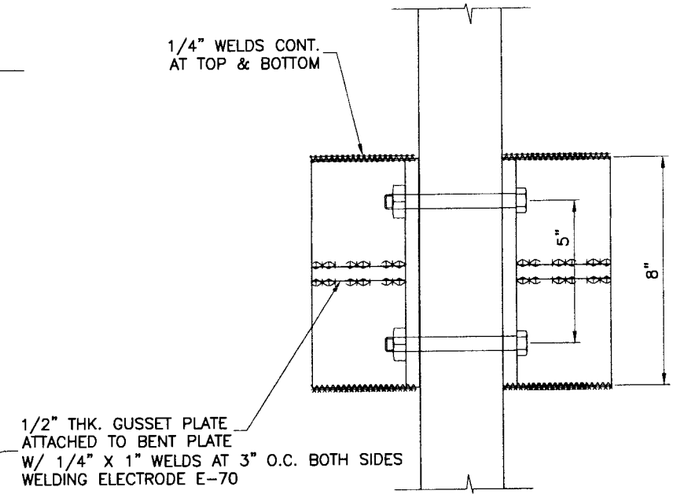

CORNER MULLION
FRONT VIEW

ALL ANGLES AND PLATES
TO BE A-36 STEEL
Fy = 36 KSI MIN.

WIND LOAD ANCHOR

WIND + DEAD LOAD ANCHOR

Engr: DR. HUMAYOUN FAROOQ
STRUCTURES
FLA. PE # 16557
C.A.N. 3538

SEP 0 3 2008

PRODUCT REVISED
as complying with the Florida
Building Code
Acceptance No 08-0603.03
Expiration Date 5-30-12
By Dilip Harris
Miami Dade Product Control
Division

afc

AL-FAROOQ CORPORATION
ENGINEERS & PRODUCT DEVELOPMENT
1235 S.W. 87 AVE
MIAMI, FLORIDA 33174
TEL. (305) 264-8100 FAX. (305) 262-6978
COMP-ANL\W08-40YKK

YHC-300 SSG ALUM CURTAIN WALL SYSTEM (S.M.I.)

YKK ap®
YKK AP AMERICA INC.
332 FIRETOWER ROAD
DUBLIN, GEORGIA 31021
TEL.(478) 277-1955 FAX(478) 277-1978

revisions:

no	date	by	description
A	07.25.08		REV. PER BCCO COMMENTS
B	08.14.08		REV. PER BCCO COMMENTS
C	09.02.08		REV. PER BCCO COMMENTS

date: 04-30-08
scale: 3/8" = 1"
dr. by: HAMID
chk. by:

drawing no.
W08-40

MAX. DESIGN LOAD –PSF DUE TO ANCHOR CAPACITY EXT.(+) & INT.(–)		
NOMINAL DIMS.		ANCHOR
WIDTH (W)	FRAME HEIGHT	TYPE 'A'
30"	108"	90.0
36"		90.0
42"		90.0
48"		90.0
54"		90.0
60"		90.0
30"	114"	90.0
36"		90.0
42"		90.0
48"		90.0
54"		90.0
60"		85.2
30"	120"	90.0
36"		90.0
42"		90.0
48"		90.0
54"		90.0
60"		81.0
30"	126"	90.0
36"		90.0
42"		90.0
48"		90.0
54"		85.7
30"	132"	90.0
36"		90.0
42"		90.0
48"		90.0
54"		81.8
30"	138"	90.0
36"		90.0
42"		90.0
48"		88.0
30"	144"	90.0
36"		90.0
42"		90.0
48"		84.3
30"	150"	90.0
36"		90.0
42"		90.0
48"		81.0

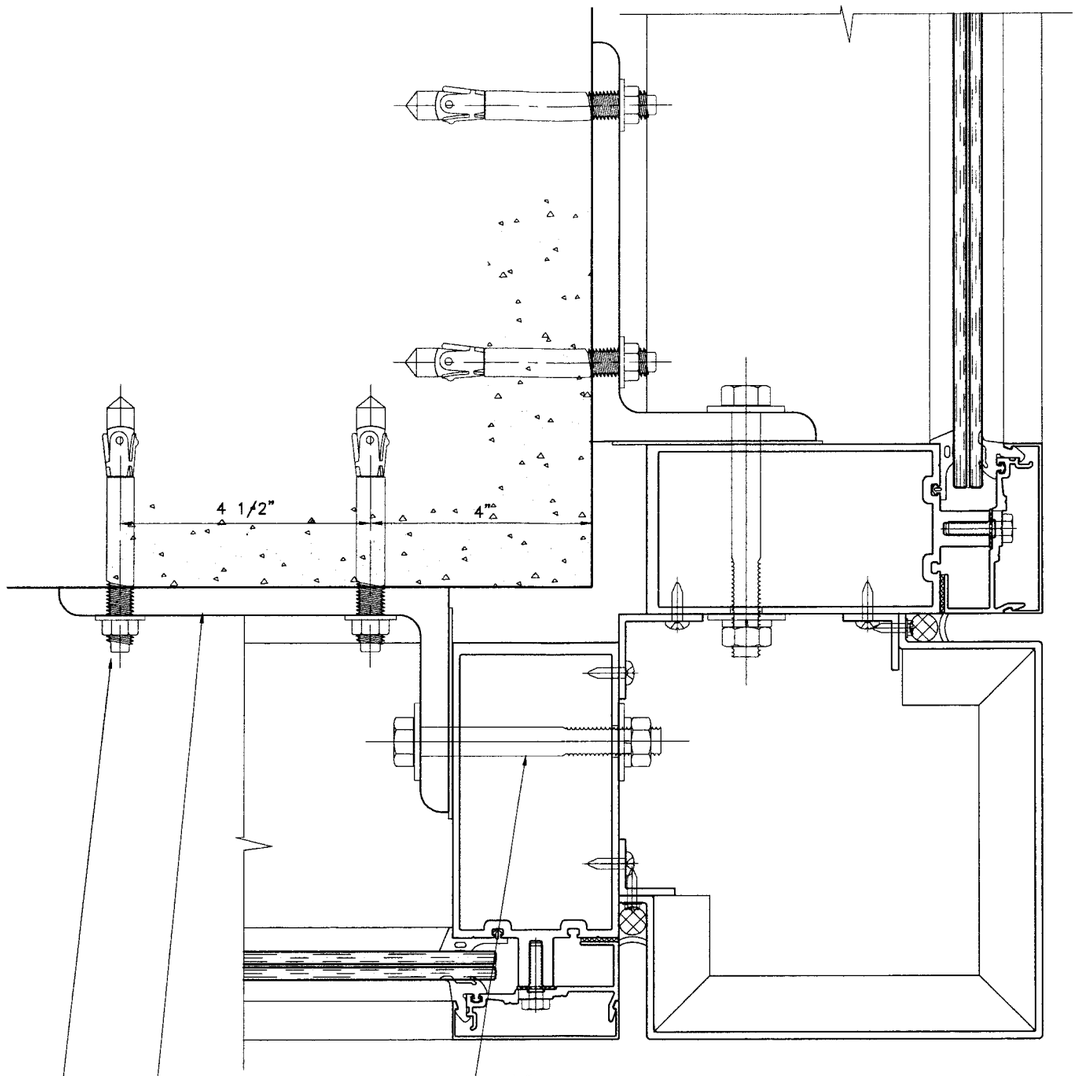

7 X 4 X 1/2"
STEEL ANGLE, 6" LONG

1/2" DIA. THRU BOLT GRADE 5
WITH WASHER & NUT
2 PER ANGLE AT 4" O.C.
IN 2" LONG SLOTTED HOLES AT WIND LOAD ANCHOR
1/2" DIA. HOLES AT WIND + DEAD LOAD ANCHOR

1/2" DIA. KWIK BOLT–3 EXPANSION ANCHOR
2 PER ANGLE
3–1/2" MIN. EMBED
4–1/2" C/C SPACING
4" MIN. EDGE DIST.

CORNER MULLION ANCHORS
DEATIL '9'

ANCHORS INTO CONCRETE

ALL ANGLES AND PLATES
TO BE A–36 STEEL
Fy = 36 KSI MIN.

WIND LOAD ANCHOR

WIND + DEAD LOAD ANCHOR

NOTE:
FOR SLABS LESS THAN 8 INCHES IN THICKNESS ANCHORS TO BE DESIGNED ON JOB TO JOB BASIS. THE DESIGN TO BE REVIEWED BY AUTHORITY HAVING JURISDICTION.

Engr: DR. HUMAYOUN FAROOQ
STRUCTURES
FLA. PE # 16557
C.A.N. 3538

SEP 03 2008

PRODUCT REVISED
as complying with the Florida Building Code
Acceptance No 08-0603.03
Expiration Date 5-30-12
By Jeff Harris
Miami Dade Product Control Division

AL-FAROOQ CORPORATION
ENGINEERS & PRODUCT DEVELOPMENT
1235 S.W. 87 AVE
MIAMI, FLORIDA 33174
TEL. (305) 264-8100 FAX. (305) 262-6978

COMP–ANL\W08–40YKK

YHC–300 SSG ALUM CURTAIN WALL SYSTEM (S.M.I.)

YKK AP AMERICA INC.
332 FIRETOWER ROAD
DUBLIN, GEORGIA 31021
TEL.(478) 277–1955 FAX(478) 277–1978

revisions:			
no	date	by	description
C	09.02.08		REV. PER BCCO COMMENTS

date: 04–30–08
scale: 3/8" = 1"
dr. by: HAMID
chk. by:

drawing no.
W08–40

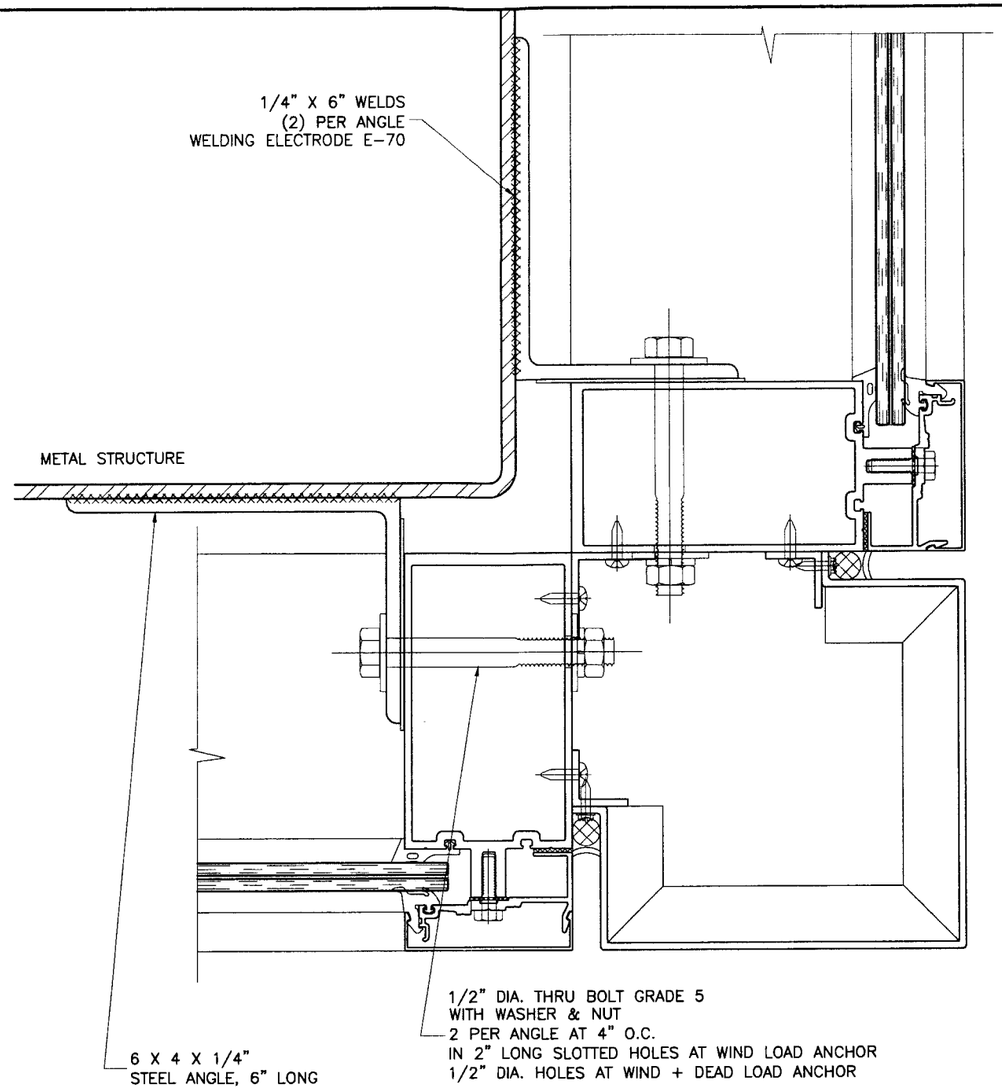

MAX. DESIGN LOAD = 90 PSF

CORNER MULLION ANCHORS
DETAIL '9' (ALT.)

ANCHORS INTO METAL STRUCTURES
1/4" MIN. THICKNESS STEEL

PRODUCT REVISED
as complying with the Florida
Building Code
Acceptance No 08-0603.03
Expiration Date 5-30-12
By Jeff Harris
Miami Dade Product Control
Division

ALL ANGLES AND PLATES
TO BE A-36 STEEL
Fy = 36 KSI MIN.

WIND LOAD ANCHOR

WIND + DEAD LOAD ANCHOR

Engr: DR. HUMAYOUN FAROOQ
STRUCTURES
FLA. PE # 16557
C.A.N. 3538
SEP 03 2008

AL-FAROOQ CORPORATION
ENGINEERS & PRODUCT DEVELOPMENT
1235 S.W. 87 AVE
MIAMI, FLORIDA 33174
TEL. (305) 264-8100 FAX. (305) 262-6978
COMP-ANL\W08-40YKK

YHC-300 SSG ALUM CURTAIN WALL SYSTEM (S.M.I.)

YKK AP AMERICA INC.
332 FIRETOWER ROAD
DUBLIN, GEORGIA 31021
TEL.(478) 277-1955 FAX(478) 277-1978

revisions:			
no	date	by	description
C	09.02.08		REV. PER BCCO COMMENTS

date: 04-30-08
scale: 3/8" = 1"
dr. by: HAMID
chk. by:

drawing no.
W08-40

sheet 19.2 of 22

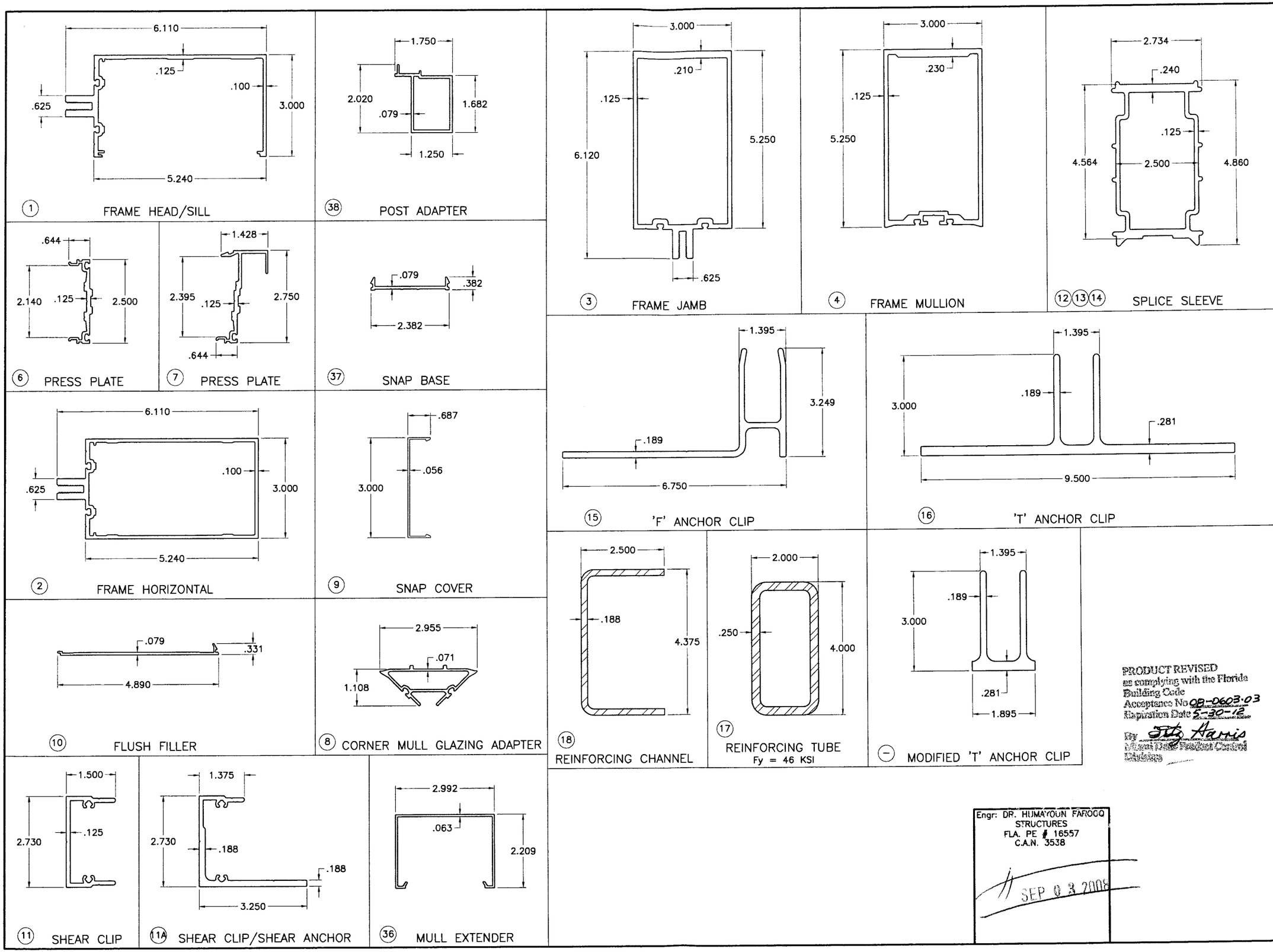

PRODUCT REVISED
as complying with the Florida
Building Code
Acceptance No 08-0603-03
Expiration Date 5-30-12
By Fitz Harris
Miami Dade Product Control
Division

Engr: DR. HUMAYOUN FAROOQ
STRUCTURES
FLA. PE # 16557
C.A.N. 3538

SEP 0 3 2008

AL-FAROOQ CORPORATION
ENGINEERS & PRODUCT DEVELOPMENT
1235 S.W. 87 AVE
MIAMI, FLORIDA 33174
TEL. (305) 264-8100 FAX. (305) 262-6978
COMP-ANL\W08-40YKK

YHC-300 SSG ALUM CURTAIN WALL SYSTEM (S.M.I.)

YKK AP AMERICA INC.
332 FIRETOWER ROAD
DUBLIN, GEORGIA 31021
TEL.(478) 277-1955 FAX(478) 277-1978

revisions:

no	date	by	description
A	07.25.08		NO CHNAGE THIS SHEET
B	08.14.08		NO CHANGE THIS SHEET
C	09.02.08		NO CHANGE THIS SHEET

date: 04-30-08
scale: 3/8" = 1"
dr. by: HAMID
chk. by:

drawing no.
W08-40

ITEM NO.	PART NO.	QUANTITY	DESCRIPTION	MATERIAL	MANF./SUPPLIER/REMARKS
1	E9-3105	AS REQD.	FRAME HEAD/SILL	6063-T5	YKK AP AMERICA
2	E9-3106	AS REQD.	FRAME HORIZONTAL	6063-T5	YKK AP AMERICA
3	E9-3103	AS REQD.	FRAME JAMB	6063-T5	YKK AP AMERICA
4	E9-3119	AS REQD.	FRAME MULLION	6063-T5	YKK AP AMERICA
5	–	–	–	–	–
6	E9-3140	AS REQD.	PRESS PLATE AT HORIZONTAL	6063-T5	YKK AP AMERICA
7	AS-3144	AS REQD.	PRESS PLATE AT HEAD/SILL/JAMB	6063-T5	YKK AP AMERICA
8	E9-3149	AS REQD.	CORNER MULLION GLAZING ADAPTER	6063-T5	YKK AP AMERICA
9	E9-3161	AS REQD.	SNAP COVER	6063-T5	YKK AP AMERICA
10	E9-3162	AS REQD.	FLUSH FILLER	6063-T5	YKK AP AMERICA
11	E1-3001	AS REQD.	SHEAR CLIP	6063-T5	YKK AP AMERICA
11A	E1-3002	AS REQD.	SHEAR CLIP/SHEAR ANCHOR	6063-T5	YKK AP AMERICA
12	E1-3005	AS REQD.	SPLICE SLEEVE, 13" LONG	6063-T5	YKK AP AMERICA
13	E1-3006	AS REQD.	ANCHOR SLEEVE, 3" LONG	6063-T5	YKK AP AMERICA
13A	E1-3006	AS REQD.	ANCHOR SLEEVE, 6" LONG	6063-T5	YKK AP AMERICA
14	E1-3007	AS REQD.	REINFORCING SLEEVE, 29" LONG	6063-T5	YKK AP AMERICA
15	E1-3004	AS REQD.	'F' ANCHOR	6063-T5	YKK AP AMERICA
16	E1-3003	AS REQD.	'T' ANCHOR	6063-T5	YKK AP AMERICA
17	E1-0187	AS REQD.	REINFORCING TUBE	GALV. STEEL	ASTM A500 GRADE B
18	E1-0189	AS REQD.	REINFORCING CHANNEL	GALV. STEEL	Fy = 36 KSI
19	E1-3011	AS REQD.	END PLATE	ALUMINUM	–
20	–	–	–	–	–
21	E2-0351	AS REQD.	9/16" F.C. GLAZING GASKET	EPDM SC	–
22	E2-0176	AS REQD.	SPACER GASKET AT MULLION	EPDM SC	–
22A	E2-0376	AS REQD.	SPACER GASKET AT HEAD/SILL/JAMB	EPDM SC	–
23	E2-0357	AS REQD.	SETTING BLOCK	EPDM	–
24	E3-0103	AS REQD.	SLIP PAD	NYLON	–
25	E2-0356	AS REQD.	ISOLATOR TAPE	PVC SPONGE	–
26	E2-0355	AS REQD.	END DAM BLOCK	E.V.A. SPONGE	–
27	FC-1410	AS REQD.	#14 X 5/8" FH SMS	ZINC PLATED ST.	FOR MULLION END CAP
28	FF-0808	AS REQD.	#8 X 1/2" FH SMS	ZINC PLATED ST.	FOR REINF. SLEEVE
29	FC-1212	AS REQD.	#12 X 3/4" FH SMS	ZINC PLATED ST.	FOR SPLICE SLEEVE
30	FC-1220	AS REQD.	#12 X 1-1/4" FH SMS	ZINC PLATED ST.	FOR HORIZONTAL/SHEAR CLIP
31	PC-1010	AS REQD.	#10 X 5/8" PH SMS	ZINC PLATED ST.	FOR ANCHOR SLEEVE
32	FC-1016	AS REQD.	#10 X 1" PH SMS	ZINC PLATED ST.	FOR DOOR ADAPTOR
33	HF2510-W1	AS REQD.	1/4-20 X 5/8" HWH TCS	ZINC PLATED ST.	FOR TYP. SHEAR CLIP
34	HF2528-W1	AS REQD.	1/4-20 X 1-3/4" HWH TCS	ZINC PLATED ST.	FOR TYP. SHEAR CLIP & ST. REINFORCING
35	HM2516-W3	AS REQD.	1/4-20 X 1" HWH MS	ZINC PLATED ST.	FOR PRESSURE PLATE
36	E9-3165	AS REQD.	MULL EXTENDER	6063-T5	YKK AP AMERICA
37	E9-1280	AS REQD.	SNAP BASE	6063-T5	YKK AP AMERICA
38	E9-3150	AS REQD.	POST ADAPTER AT DOOR	6063-T5	YKK AP AMERICA

PRODUCT REVISED
as complying with the Florida
Building Code
Acceptance No 08-0603.03
Expiration Date 5-30-12
Miami-Dade Product Control

Engr: DR. HUMAYOUN FAROOQ
STRUCTURES
FLA. PE # 16557
C.A.N. 3538
SEP 03 2008

AL-FAROOQ CORPORATION
ENGINEERS & PRODUCT DEVELOPMENT
1235 S.W. 87 AVE
MIAMI, FLORIDA 33174
TEL. (305) 264-8100 FAX. (305) 262-6978

COMP-ANL\W08-40YKK

YHC-300 SSG ALUM CURTAIN WALL SYSTEM (S.M.I.)

YKK AP AMERICA INC.
332 FIRETOWER ROAD
DUBLIN, GEORGIA 31021
TEL.(478) 277-1955 FAX(478) 277-1978

revisions:

no	date	by	description
A	07.25.08		REV. PER BCCO COMMENTS
B	08.14.08		REV. PER BCCO COMMENTS
C	09.02.08		NO CHANGE THIS SHEET

date: 04-30-08
scale: 3/8" = 1"
dr. by: HAMID
chk. by:

drawing no.
W08-40

sheet 21 of 22

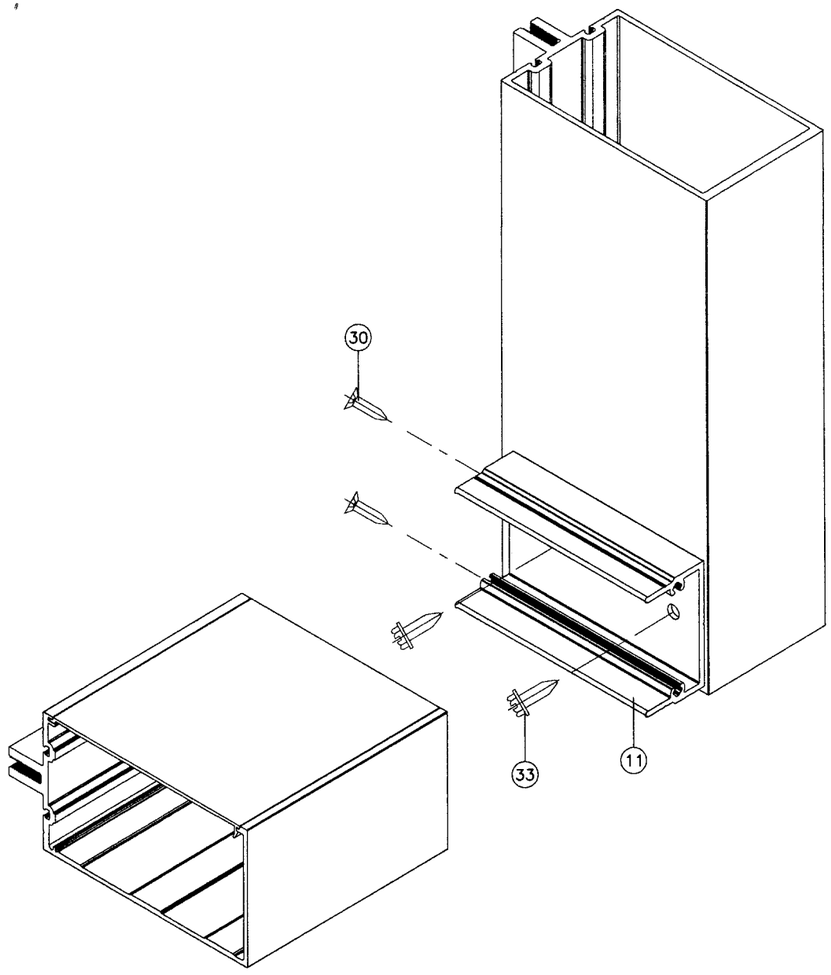

FRAME TOP/BOTTOM CORNER

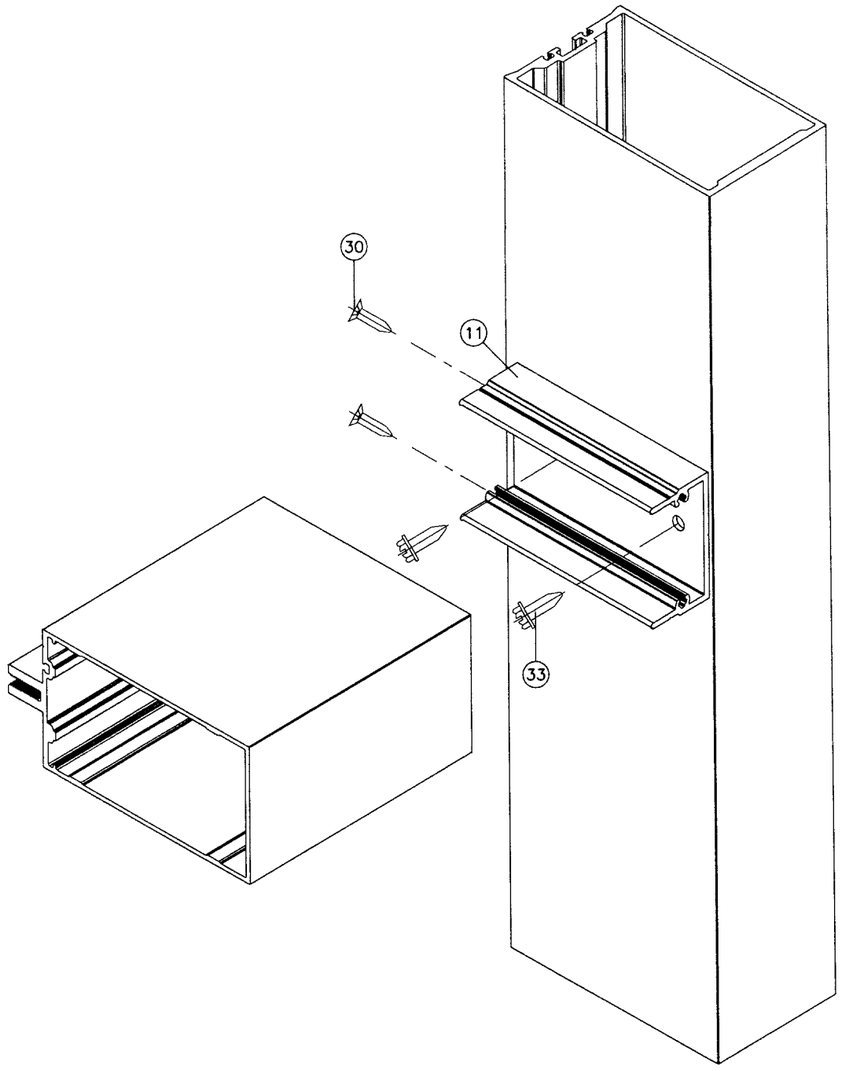

FRAME HORIZONTAL CORNER

Engr: DR. HUMAYOUN FAROOQ
STRUCTURES
FLA. PE # 16557
C.A.N. 3538

SEP 03 2008

PRODUCT REVISED
as complying with the Florida Building Code
Acceptance No 08-0603-03
Expiration Date 5-30-12
By Sally Harris
Miami Dade Product Control Division

AL-FAROOQ CORPORATION
ENGINEERS & PRODUCT DEVELOPMENT
1235 S.W. 87 AVE
MIAMI, FLORIDA 33174
TEL. (305) 264-8100 FAX. (305) 262-6978
COMP-ANL\W08-40YKK

YHC-300 SSG ALUM CURTAIN WALL SYSTEM (S.M.I.)

YKK AP AMERICA INC.
332 FIRETOWER ROAD
DUBLIN, GEORGIA 31021
TEL.(478) 277-1955 FAX(478) 277-1978

revisions:

no	date	by	description
A	07.25.08		NO CHNAGE THIS SHEET
B	08.14.08		REV. PER BCCO COMMENTS
C	09.02.08		NO CHANGE THIS SHEET

date: 04-30-08
scale: 3/8" = 1"
dr. by: HAMID
chk. by:

drawing no.
W08-40

sheet 22 of 22