MIAMI-DADE COUNTY
BUILDING CODE COMPLIANCE OFFICE (BCCO)
PRODUCT CONTROL DIVISION

MIAMI-DADE COUNTY, FLORIDA
METRO-DADE FLAGLER BUILDING
140 WEST FLAGLER STREET, SUITE 1603
MIAMI, FLORIDA 33130-1563
(305) 375-2901 FAX (305) 372-6339
www.maimidade.gov/buildingcode

NOTICE OF ACCEPTANCE (NOA)

Palm City Millwork, Inc.
3313 S. W. 42 Ave.
Palm City, FL 34990

SCOPE:

This NOA is being issued under the applicable rules and regulations governing the use of construction materials. The documentation submitted has been reviewed by Miami-Dade County Product Control Division and accepted by the Board of Rules and Appeals (BORA) to be used in Miami Dade County and other areas where allowed by the Authority Having Jurisdiction (AHJ).

This NOA shall not be valid after the expiration date stated below. The Miami-Dade County Product Control Division (In Miami Dade County) and/or the AHJ (in areas other than Miami Dade County) reserve the right to have this product or material tested for quality assurance purposes. If this product or material fails to perform in the accepted manner, the manufacturer will incur the expense of such testing and the AHJ may immediately revoke, modify, or suspend the use of such product or material within their jurisdiction. BORA reserves the right to revoke this acceptance, if it is determined by Miami-Dade County Product Control Division that this product or material fails to meet the requirements of the applicable building code.

This product is approved as described herein, and has been designed to comply with the Florida Building Code, including the High Velocity Hurricane Zone.

DESCRIPTION: Series "Mahogany" 10'0" W/E Outswing Glazed Wood French Door - L.M.I.

APPROVAL DOCUMENT: Drawing No. **1470A**, Series titled "10 Foot Out-Swing Impact French Doors", sheets 1 through 9 of 9, dated 03/22/08, prepared by W. W. Schaefer Engineering & Consulting, P. A., signed and sealed by Warren W. Schaefer, P. E., bearing the Miami-Dade County Product Control Approval stamp with the Notice of Acceptance number and Approval date by the Miami-Dade County Product Control Division.

MISSILE IMPACT RATING: Large and Small Missile Impact Resistant

LABELING: Each unit shall bear a permanent label with the manufacturer's name or logo, city, state and following statement: "Miami-Dade County Product Control Approved", unless otherwise noted herein.

RENEWAL of this NOA shall be considered after a renewal application has been filed and there has been no change in the applicable building code negatively affecting the performance of this product.

TERMINATION of this NOA will occur after the expiration date or if there has been a revision or change in the materials, use, and/or manufacture of the product or process. Misuse of this NOA as an endorsement of any product, for sales, advertising or any other purposes shall automatically terminate this NOA. Failure to comply with any section of this NOA shall be cause for termination and removal of NOA.

ADVERTISEMENT: The NOA number preceded by the words Miami-Dade County, Florida, and followed by the expiration date may be displayed in advertising literature. If any portion of the NOA is displayed, then it shall be done in its entirety.

INSPECTION: A copy of this entire NOA shall be provided to the user by the manufacturer or its distributors and shall be available for inspection at the job site at the request of the Building Official.

This NOA consists of this page 1 and evidence page E-1, as well as approval document mentioned above.

The submitted documentation was reviewed by **Jaime D. Gasçon, P.E.**

MIAMI-DADE COUNTY APPROVED

J. Gascon
8/13/08

Palm City Millwork, Inc.

NOTICE OF ACCEPTANCE: EVIDENCE SUBMITTED

A. DRAWINGS

1. Manufacturer's die drawings and sections.
2. Drawing No. **1470A**, Series titled "10 Foot Out-Swing Impact French Doors", sheets 1 through 9 of 9, dated 03/22/08, prepared by W. W. Schaefer Engineering & Consulting, P. A., signed and sealed by Warren W. Schaefer, P.E.

B. TESTS

1. Test reports on: 1) Air Infiltration Test, per FBC, TAS 202-94
   2) Uniform Static Air Pressure Test, Loading per FBC TAS 202-94
   3) Water Resistance Test, per FBC, TAS 202-94
   4) Large Missile Impact Test per FBC, TAS 201-94
   5) Cyclic Wind Pressure Loading per FBC, TAS 203-94
   6) Forced Entry Test, per FBC 2411 3.2.1, TAS 202-94

   Along with marked-up drawings and installation diagram of in/ out – swing French door system, prepared by Hurricane Test Laboratory, LLC, Test Report No. **HTL 0067-1014-06**, dated 02/06/2008, signed and sealed by Vinu J. Abraham, P. E.

C. CALCULATIONS

1. Anchor verification calculations and structural analysis, complying with FBC-2004, prepared by W. W. Schaefer Engineering & Consulting, P. A., dated 04/22/08, signed and sealed by Warren W. Schaefer, P.E.
   Complies with ASTM E1300-98/02

D. QUALITY ASSURANCE

1. Miami Dade Building Code Compliance Office (BCCO).

E. MATERIAL CERTIFICATIONS

1. Notice of Acceptance No. **07-1116.04** issued to E.I. DuPont DeNemours & Co., Inc. for their "**DuPont Sentry Glass ® Plus**" dated 01/03/08, expiring on 01/14/12.
2. Notice of Acceptance No. **08-0520.08** issued to Solutia Inc. for their "**Vanceva Composites Glass Interlayer**" dated 7/17/2008, expiring on 12/11/2013.

F. STATEMENTS

1. Statement letter of conformance, independence and no financial interest, dated April 22, 2008, signed and sealed by Warren W. Schaefer, P.E.
2. Laboratory compliance letter for Test Report no. **HTL 0067-1014-06**, issued by Hurricane Test Laboratory, LLC, dated February 02, 2008, signed and sealed by Vinu J. Abraham, P.E.

G. OTHERS

1. None

Jaime D. Gasçon, P.E.
Chief, Product Control Division
NOA No. 08-0604.06
Expiration Date: September 04, 2013
Approval Date: September 04, 2008

GENERAL NOTES:

1. THESE DOOR SYSTEMS HAVE BEEN TESTED, ANALYZED & APPROVED FOR DESIGN PRESSURES NOT TO EXCEED THOSE SHOWN IN THE "ALLOWABLE DESIGN PRESSURE TABLE(S).
2. OPENINGS, BUCKING & BUCKING FASTENERS MUST BE PROPERLY DESIGNED & INSTALLED TO TRANSFER WIND LOADS TO THE STRUCTURE.
3. ALL HARDWARE & FASTENERS SHALL BE IN ACCORDANCE WITH THESE DRAWINGS & SHALL NOT VARY UNLESS SPECIFICALLY MENTIONED ON THE DRAWINGS. SPECIFIED ANCHOR EMBED TO BASE MATERIAL SHALL BE BEYOND WALL FINISH OR STUCCO.
4. THE DETAILS & SPECIFICATIONS SHOWN HEREIN REPRESENT THE PRODUCTS TESTED & PROPOSED FOR WATER, AIR, IMPACT, CYCLIC & UNIFORM STATIC AIR PRESSURE TESTING IN CONFORMANCE WITH THE FLORIDA BUILDING CODE PROTOCALS TAS-201, 202 & 203 FOR LARGE MISSILE IMPACT DOORS.
5. THESE DOOR SYSTEMS HAVE BEEN DESIGNED IN ACCORDANCE WITH AND MEET THE REQUIREMENTS OF THE FLORIDA BUILDING CODE (FBC) INCLUDING HIGH VELOCITY HURRICANE ZONES (HVHZ).
6. IMPACT SHUTTERS ARE NOT REQUIRED WITH THESE DOORS.
7. ALL ANCHORS SECURING DOOR FRAME TO PRESSURE TREATED BUCKS OR WOOD FRAMING SHALL BE CAPABLE OF RESISTING CORROSION CAUSED BY THE PRESSURE TREATING CHEMICALS IN THE WOOD.
8. DETERMINE THE POSITIVE & NEGATIVE DESIGN LOADS TO USE WHEN REFERENCING THESE DOCUMENTS IN ACCORDANCE WITH THE GOVERNING CODE AND GOVERNING WIND VELOCITY. FOR WIND LOAD CALCULATIONS IN ACCORDANCE WITH THE FLORIDA BUILDING CODE, A DIRECTIONALITY FACTOR OF Kd = 0.85 MAY BE APPLIED WHEN USED IN CONJUNCTION WITH LOAD COMBINATIONS SPECIFIED IN SECTION 2.0 OF THE ASCE 7 STANDARD.
9. NO INCREASE IN ALLOWABLE STRESS HAS BEEN USED IN THE CERTIFICATION OF THIS PRODUCT. WIND LOAD DURATION FACTOR Cd = 1.6 WAS USED FOR WOOD SCREW ANALYSIS ONLY.
10. MATERIALS, INCLUDING BUT NOT LIMITED TO STEEL SCREWS, THAT COME INTO CONTACT WITH OTHER DISSIMILAR MATERIALS SHALL MEET THE REQUIREMENTS OF FLORIDA BUILDING CODE CHAPTER~~S~~ 20, 2326

CORNER CONSTRUCTION

RECTANGULAR HEAD FRAME CORNERS: VERTICAL & HORIZONTAL MEMBERS ARE SQUARE CUT & BUTTED TOGETHER. THE VERTICAL MEMBERS ARE MECHANICALLY ATTACHED TO THE HEAD MEMBER USING FOUR(4) NO. 10 X 2 1/2" S.S. WOOD SCREWS, AND THEN SEALED USING DOW 1199 OR DOW 995 SEALANT.

EYEBROW HEAD FRAME CORNERS: VERTICAL & HORIZONTAL MEMBERS ARE MITERED, BUTTED TOGETHER AND GLUED WITH FRANKLIN WOOD GLUE. THE VERTICAL MEMBERS ARE MECHANICALLY ATTACHED TO THE HEAD MEMBER USING TWO(2) NO. 10 X 2 1/2" S.S. WOOD SCREWS. THE HEAD MEMBER IS MECHANICALLY ATTACHED TO THE VERTICAL MEMBERS USING THREE(3) NO. 10 X 2 1/2" S.S. WOOD SCREWS. A 20 GA. X 3 1/8" X 7" GALV. SIMPSON STRONG TIE STEEL PLATE IS CENTERED ON BOTH MEMBERS & MECHANICALLY ATTACHED WITH SIXTEEN(16) NO. 6 X 3/4" S.S. PAN HEAD WOOD SCREWS (8 SCREWS EACH SIDE OF JOINT). EACH CORNER IS SEALED USING DOW 1199 OR DOW 995 SEALANT.

HALF-ROUND HEAD FRAME CORNERS: VERTICAL & HORIZONTAL MEMBERS ARE SQUARE CUT, DADO CUT (1/4" X 1" DEEP), SPLINED AND GLUED TOGETHER WITH 1/4" X 4" X 2" PLYWOOD AND GLUED WITH FRANKLIN WOOD GLUE. A 20 GA. X 3 1/8" X 7" GALV. SIMPSON STRONG TIE STEEL PLATE IS CENTERED ON BOTH MEMBERS & MECHANICALLY ATTACHED WITH SIXTEEN(16) NO. 6 X 3/4" S.S. PAN HEAD WOOD SCREWS (8 SCREWS EACH SIDE OF JOINT). EACH CORNER IS SEALED USING DOW 1199 OR DOW 995 SEALANT.

STANDARD SILL CORNERS (NON-ADA): VERTICAL & HORIZONTAL MEMBERS ARE SQUARE CUT & BUTTED TOGETHER. THE VERTICAL MEMBERS ARE MECHANICALLY ATTACHED TO THE SILL USING TWO(2) NO. 10 X 2 1/2" S.S. WOOD SCREWS. EACH CORNER IS SEALED USING SASHCO SILICONE SEALANT.

ADA SILL CORNERS: VERTICAL & HORIZONTAL MEMBERS ARE SQUARE CUT & BUTTED TOGETHER AND SEALED USING SASHCO SILICONE SEALANT.

RECTANGULAR & EYEBROW TOP RAIL/STILE CORNERS: MORTISED & TENONED (1/2" THICK X 1 7/8" DEEP X 3" TALL) AND GLUED WITH FRANKLIN INTERNATIONAL MULTIBOND-2000 WOOD GLUE.

HALF-ROUND TOP RAIL/STILE CORNERS: MORTISED & TENONED (1/2" THICK X 2 3/4" DEEP X 4" TALL) AND GLUED WITH FRANKLIN INTERNATIONAL MULTIBOND-2000 WOOD GLUE.

BOTTOM RAIL/STILE CORNERS: MORTISED & TENONED (1/2" THICK X 1 7/8" DEEP X 6 3/8" TALL) AND GLUED WITH FRANKLIN INTERNATIONAL MULTIBOND-2000 WOOD GLUE.

FRAME ANCHOR REQUIREMENTS TABLE

OPENING TYPE (SUBSTRATE)	FRAME/CLIP TO OPENING FASTENER TYPE	MINIMUM EMBED	MINIMUM EDGE DIST.
FRAME SCREWS & HEAD STRIKE SCREWS			
MIN. 2X4. WOOD FRAME OR BUCK (MIN. GR. 3 & G=0.55)	NO. 10 SMS OR WOOD SCREW	1 1/4"	1"
MIN. 18 GA. 33 KSI METAL STUD	NO. 10 SELF TAP/DRILLING SCREW	FULL	1/2"
MIN. 1/8" THK A36 STEEL	NO. 10 SELF TAP/DRILLING SCREW	FULL	1/2"
MIN. 1/8" THK 6063-T5 ALUM.	NO. 10 SELF TAP/DRILLING SCREW	FULL	1/2"
C-90 CMU/2500 PSI CONCRETE	(1) 1/4" CONCRETE SCREW	1 1/4"	2"
INSTALLATION CLIP SCREWS			
MIN. 2X4. WOOD FRAME OR BUCK (MIN. GR. 3 & G=0.55)	NO. 8 X 1 1/2" SMS	1 3/8"	1/2"
MIN. 18 GA. 33 KSI METAL STUD	NO. 8 SELF TAP/DRILLING SCREW	FULL	1/2"
MIN. 1/8" THK A36 STEEL	NO. 8 SELF TAP/DRILLING SCREW	FULL	1/2"
MIN. 1/8" THK 6063-T5 ALUM.	NO. 8 SELF TAP/DRILLING SCREW	FULL	1/2"

(1) CONCRETE SCREWS SHALL BE ELCO OR ITW RAMSET/RED HEAD TAPCONS, HILTI KWIK-CON II OR POWERS RAWL TAPPER (HARDENED STEEL OR S.S.).

SHAPES CONSIDERED AS PART OF THIS APPROVAL

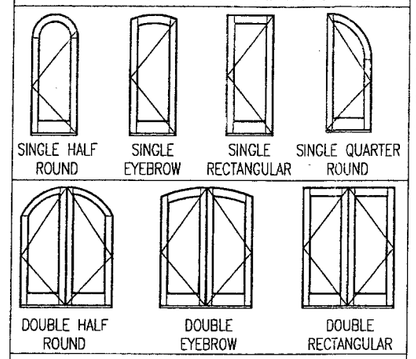

NOTES:

1. OTHER SHAPES MAY APPLY PROVIDING THEY ARE SIMILAR TO THOSE SHOWN & HAVE CORNER CONSTRUCTION AS DESCRIBED ON THIS SHEET.
2. ALL SHAPED UNITS MUST FIT INSCRIBED INTO THE ALLOWABLE RECTANGULAR UNITS & BE GOVERNED BY THE ALLOWABLE PRESSURE OF THE RESPECTIVE RECTANGULAR UNIT.

LOCK NOTE: ELEVATIONS SHOW ACTIVE PANELS WITH MULTI-POINT LOCK SYSTEM. SINGLE LOCK & DEADBOLT SYSTEM WITH FLUSH BOLTS ALSO APPLIES TO ACTIVE PANELS PROVIDING REQUIRED DESIGN PRESSURE DOES NOT EXCEED +/- 55 PSF.

HINGE REQUIREMENTS

FRAME HEIGHT	MIN. # OF HINGES
ABOVE 98"	5
98" & BELOW	4

NOTE:
FOR HINGE REQUIREMENTS, THE "MAX. FRAME HEIGHT" IS CONSIDERED TO BE FULL FRAME HEIGHT FOR RECTANGULAR UNITS OR DISTANCE FROM THE BASE OF FRAME TO FRAME SRINGLINE FOR SHAPED UNITS

ALLOWABLE DESIGN PRESSURE

ACTIVE PANEL LOCK SYSTEM	INACTIVE PANEL LOCK SYSTEM	ALLOWABLE PRESSURE POSITIVE	ALLOWABLE PRESSURE NEGATIVE
RECTANGULAR SINGLE & DOUBLE DOOR & SHAPED SINGLE & DOUBLE DOOR			
5 POINT MULTI-POINT	2 POINT MULTI-POINT	70 PSF	70 PSF
SHAPED SINGLE DOOR			
4 POINT MULTI-POINT	N/A	70 PSF	70 PSF
ALL DOOR CONDITIONS			
SINGLE LOCK & DEAD BOLT WITH FLUSH BOLT	CENTER ACTIVATED FLUSH BOLT	55 PSF	55 PSF

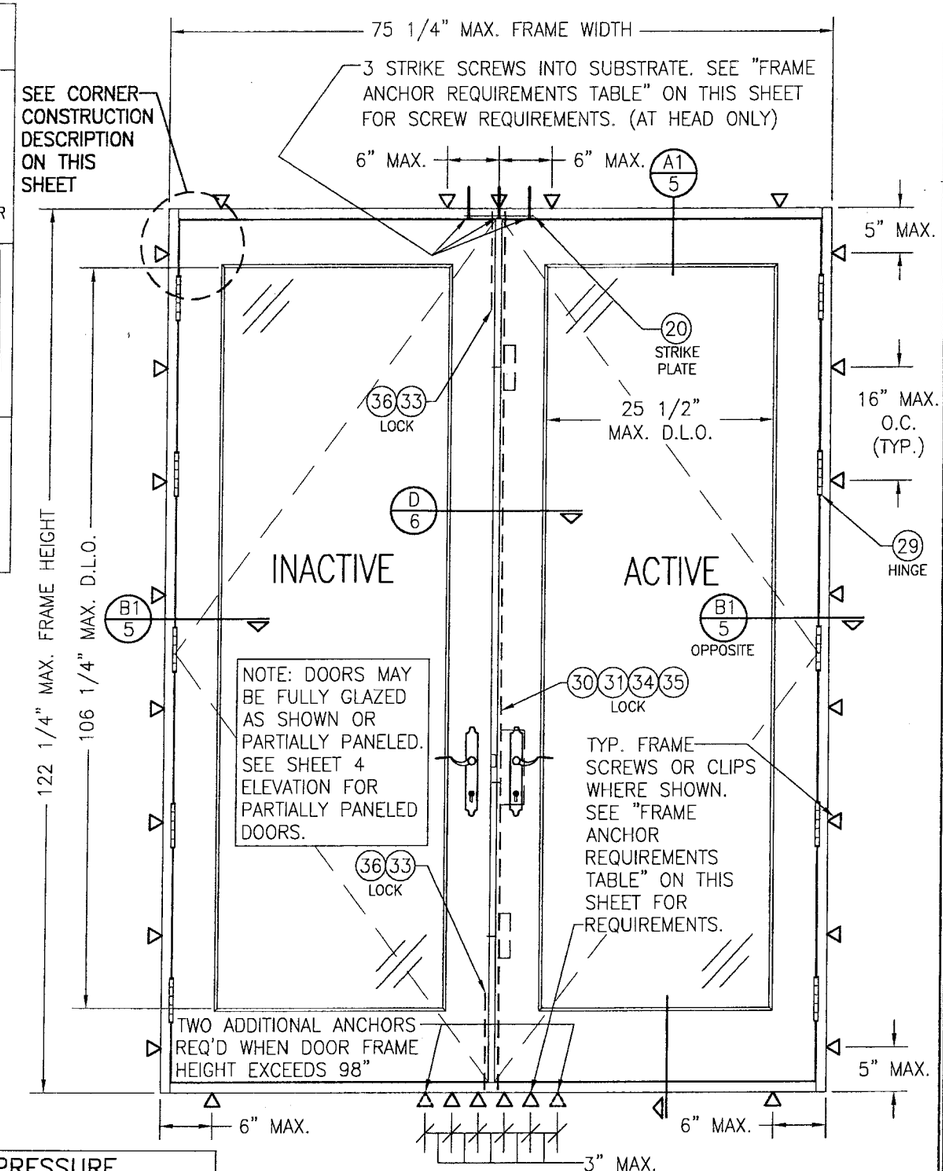

EXTERIOR ELEVATION;
DOUBLE OUT-SWING DOOR
SCALE: 3/4"=1'-0"

Approved as complying with the Florida Building Code
Date 09/04/2008
NOA# 08-0604.06
Miami Dade Product Control Division
By

NO.	REVISION DESCRIPTION	BY	DATE

DRAWN BY: W.R.M. | CHECKED BY: W.W.S.
PLOT: 1=16 | DATE: 03/22/08

DRAWING TITLE: 10 FOOT WOOD OUT-SWING IMPACT FRENCH DOORS

MANUFACTURER: PALM CITY MILLWORK, INC. 3313 S.W. 42ND AVE. PALM CITY, FL 34990 800-273-5598

CONSULTANTS: W. W. SCHAEFER ENGINEERING & CONSULTING, P.A. 8895 N. MILITARY TRAIL; SUITE C-204 PALM BEACH GARDENS, FL 33410 PHONE: 561-775-4902 FAX: 561-775-4903

CERTIFICATION: APR 2 7 2008
WARREN W. SCHAEFER, P.E. P.E. NO. 44135

DRAWING NO. 1470A | REV.

SHEET NO. 1 OF 9

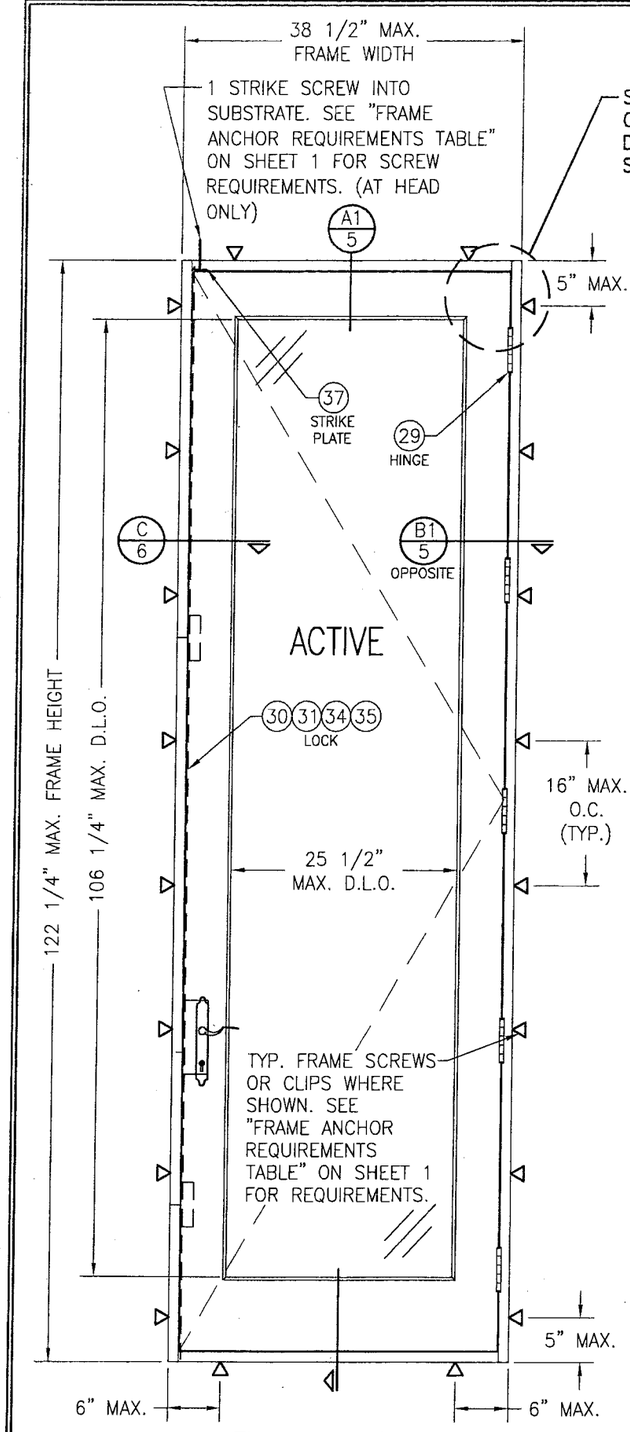

EXTERIOR ELEVATION;
SINGLE OUT-SWING DOOR
SCALE: 3/4"=1'-0"

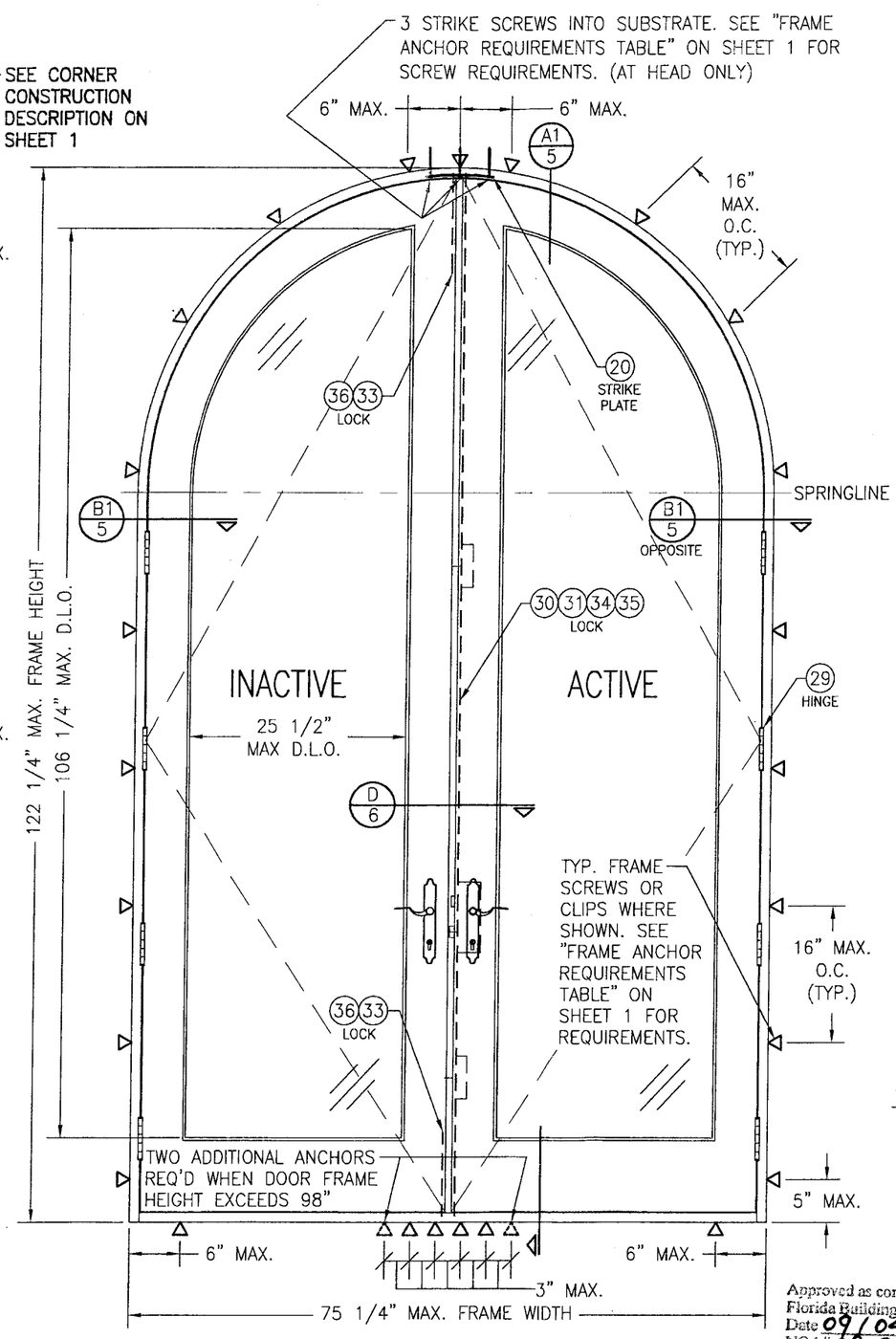

EXTERIOR ELEVATION;
DOUBLE HALF ROUND OUT-SWING DOOR
SCALE: 3/4"=1'-0"

Approved as complying with the Florida Building Code
Date 09/04/2008
NOA# 08-0604.06
Miami Dade Product Control Division
By

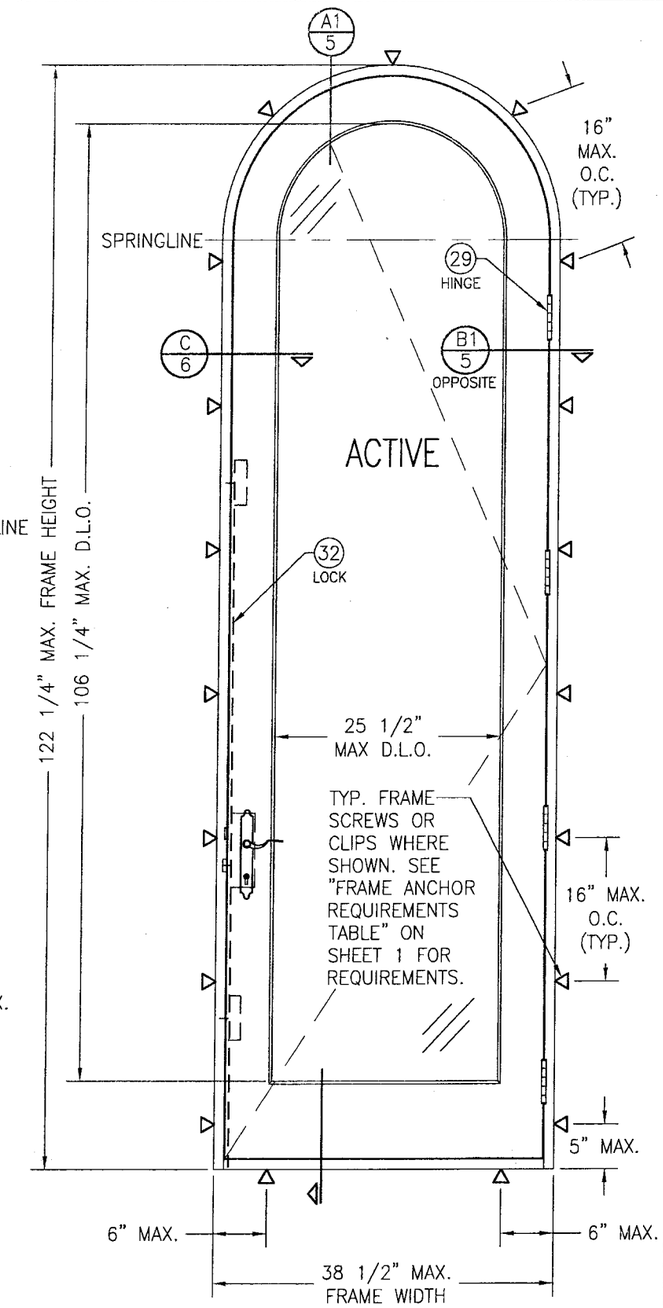

EXTERIOR ELEVATION;
SINGLE HALF ROUND OUT-SWING DOOR
SCALE: 3/4"=1'-0"

DRAWN BY: W.R.M.	CHECKED BY: W.W.S.
PLOT: 1=16	DATE: 03/22/08

NO.	REVISION DESCRIPTION	BY	DATE

DRAWING TITLE
10 FOOT WOOD OUT-SWING IMPACT FRENCH DOORS

MANUFACTURER
PALM CITY MILLWORK, INC.
3313 S.W. 42ND AVE.
PALM CITY, FL 34990
800-273-5598

CONSULTANTS
W. W. SCHAEFER ENGINEERING & CONSULTING, P.A.
8895 N. MILITARY TRAIL; SUITE C-204
PALM BEACH GARDENS, FL 33410
PHONE: 561-775-4902 FAX: 561-775-4903

CERTIFICATION
APR 24 2008
WARREN W. SCHAEFER, P.E.
P.E. NO. 44135

DRAWING NO. 1470A
REV.
SHEET NO. 2 OF 9

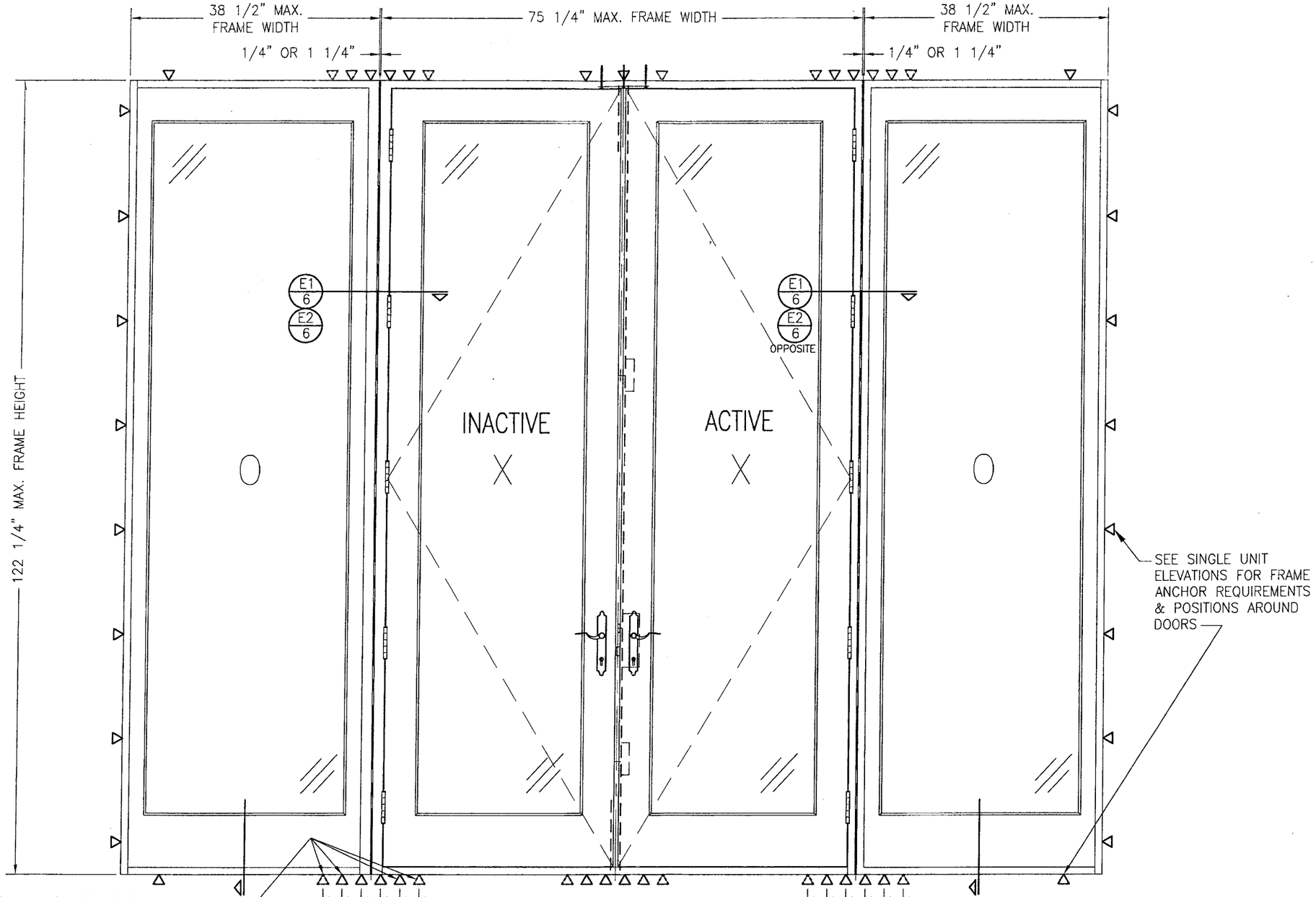

EXTERIOR ELEVATION;
DOUBLE OUT-SWING DOOR WITH SIDELIGHTS

SCALE: 3/4"=1'-0"

NOTE: OXXO DOOR SHOWN. ALL OTHER 4-PANEL CONFIGURATIONS OF SINGLE/DOUBLE DOORS & SIDELIGHTS ALSO APPLY.
(FOR ALL DETAIL NOT SHOWN; SEE INDIVIDUAL UNIT ELEVATIONS)

NOTE: WHEN AN ADA THRESHOLD IS USED WITH THE DOORS, THIS UNCLIPPED MULLION CONDITION SHOWN MAY NOT BE USED. WITH ADA THRESHOLD USE, MULLIONS MUST BE CLIPPED MULLIONS UNDER SEPERATE APPROVAL.

Approved as complying with the Florida Building Code
Date 09/04/2008
NOA# 08-0624.06
Miami Dade Product Control Division
By

DRAWN BY: W.R.M.	CHECKED BY: W.W.S.
PLOT: 1=16	DATE: 03/22/08

NO.	REVISION DESCRIPTION	BY	DATE

DRAWING TITLE
10 FOOT WOOD OUT-SWING IMPACT FRENCH DOORS

MANUFACTURER
PALM CITY MILLWORK, INC.
3313 S.W. 42ND AVE.
PALM CITY, FL 34990
800-273-5598

CONSULTANTS
W. W. SCHAEFER ENGINEERING & CONSULTING, P.A.
8895 N. MILITARY TRAIL; SUITE C-204
PALM BEACH GARDENS, FL 33410
PHONE: 561-775-4902 FAX: 561-775-4903

CERTIFICATION
APR 2 4 2008
WARREN W. SCHAEFER, P.E.
P.E. NO. 44155

DRAWING NO. 1470A
REV.
SHEET NO. 3 OF 9

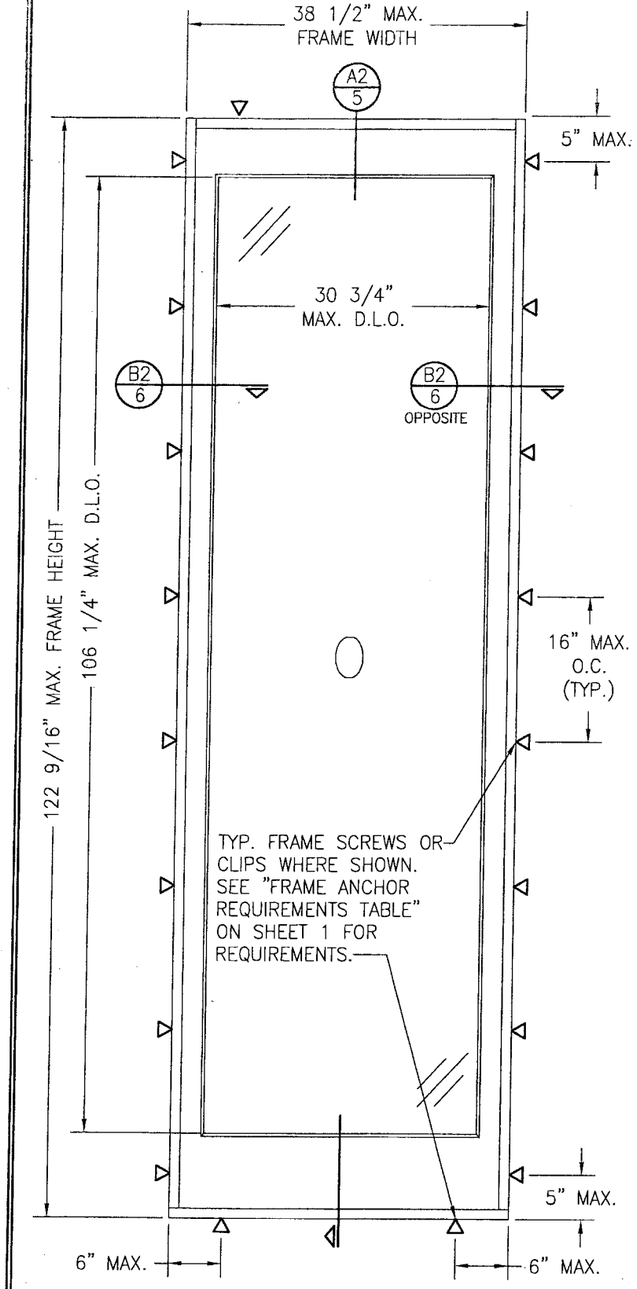

EXTERIOR ELEVATION;
SINGLE FIXED PANEL
SCALE: 3/4"=1'-0"

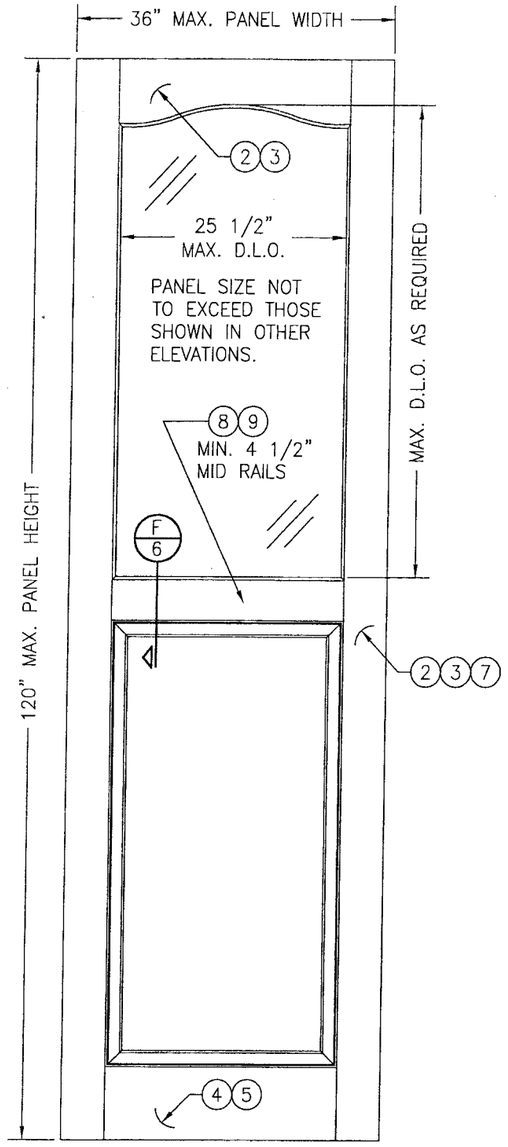

EXTERIOR ELEVATION;
RAISED PANEL
SCALE: 3/4"=1'-0"

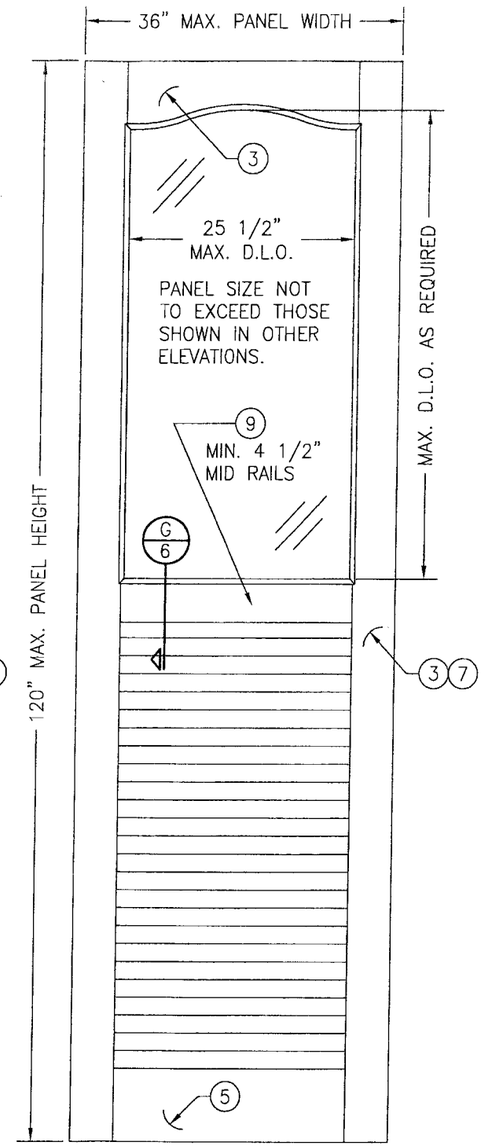

EXTERIOR ELEVATION;
LOUVERED PANEL
SCALE: 3/4"=1'-0"

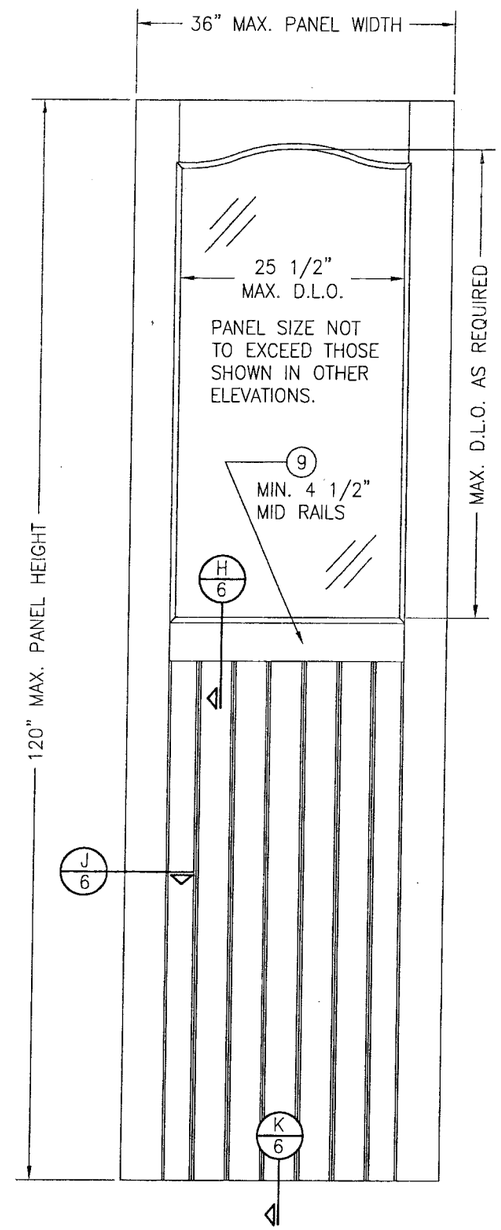

EXTERIOR ELEVATION;
TONGUE & GROOVE PANEL
SCALE: 3/4"=1'-0"

PANEL NOTES

1) TOP & MID RAILS MAY BE OF ANY CONFIGURATION PROVIDING THE SMALLEST CROSS SECTION OF RAILS IS EQUAL TO OR LARGER THAN THAT DETAILED IN DRAWINGS.
2) MULTIPLE MID RAIL (BOTH HORIZONTAL & VERTICAL) MAY BE USED WITH THESE PANELS.
3) OTHER PANEL CONFIGURATIONS THAN THOSE SHOWN SHALL APPLY PROVIDING THEY ARE SIMILAR IN CONSTRUCTION TO THAT SHOWN ABOVE.
4) PANEL ONLY IS SHOWN. FOR INSTALLATION INTO FRAME, SEE OTHER ELEVATIONS.

Approved as complying with the
Florida Building Code
Date 09/04/2004
NOA# 08-0604.06
Miami Dade Product Control
Division
By

DRAWN BY: W.R.M.	CHECKED BY: W.W.S.
PLOT: 1=16	DATE: 03/22/08

NO.	REVISION DESCRIPTION	BY	DATE

DRAWING TITLE
10 FOOT WOOD OUT-SWING IMPACT FRENCH DOORS

MANUFACTURER
PALM CITY MILLWORK, INC.
3313 S.W. 42ND AVE.
PALM CITY, FL 34990
800-273-5598

CONSULTANTS
W. W. SCHAEFER ENGINEERING & CONSULTING, P.A.
8895 N. MILITARY TRAIL: SUITE C-204
PALM BEACH GARDENS, FL 33410
PHONE: 561-775-4902 FAX: 561-775-4903

CERTIFICATION
APR 2 4 2008
WARREN W. SCHAEFER, P.E.
P.E. NO. 44135

DRAWING NO. 1470A
REV.
SHEET NO. 4 OF 9

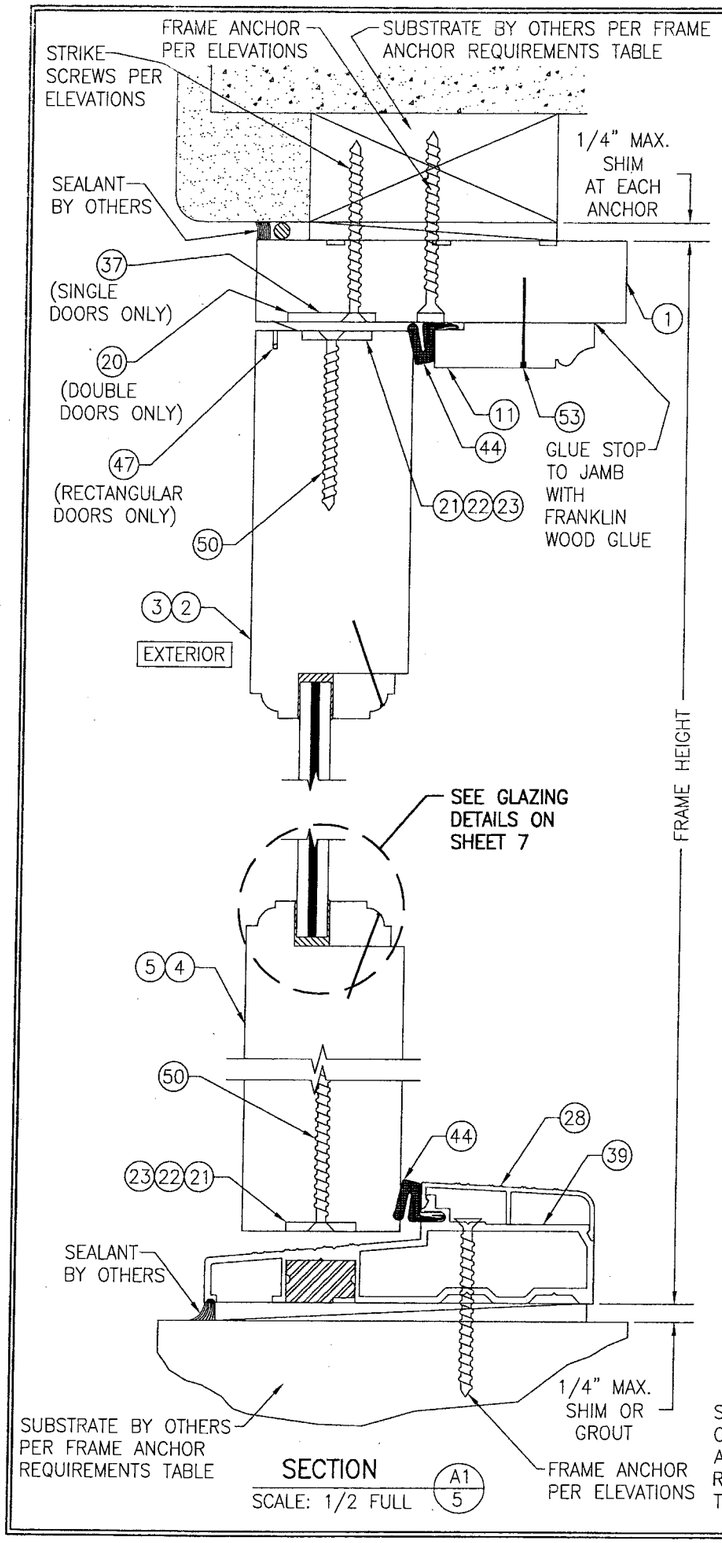

SECTION A1/5
SCALE: 1/2 FULL

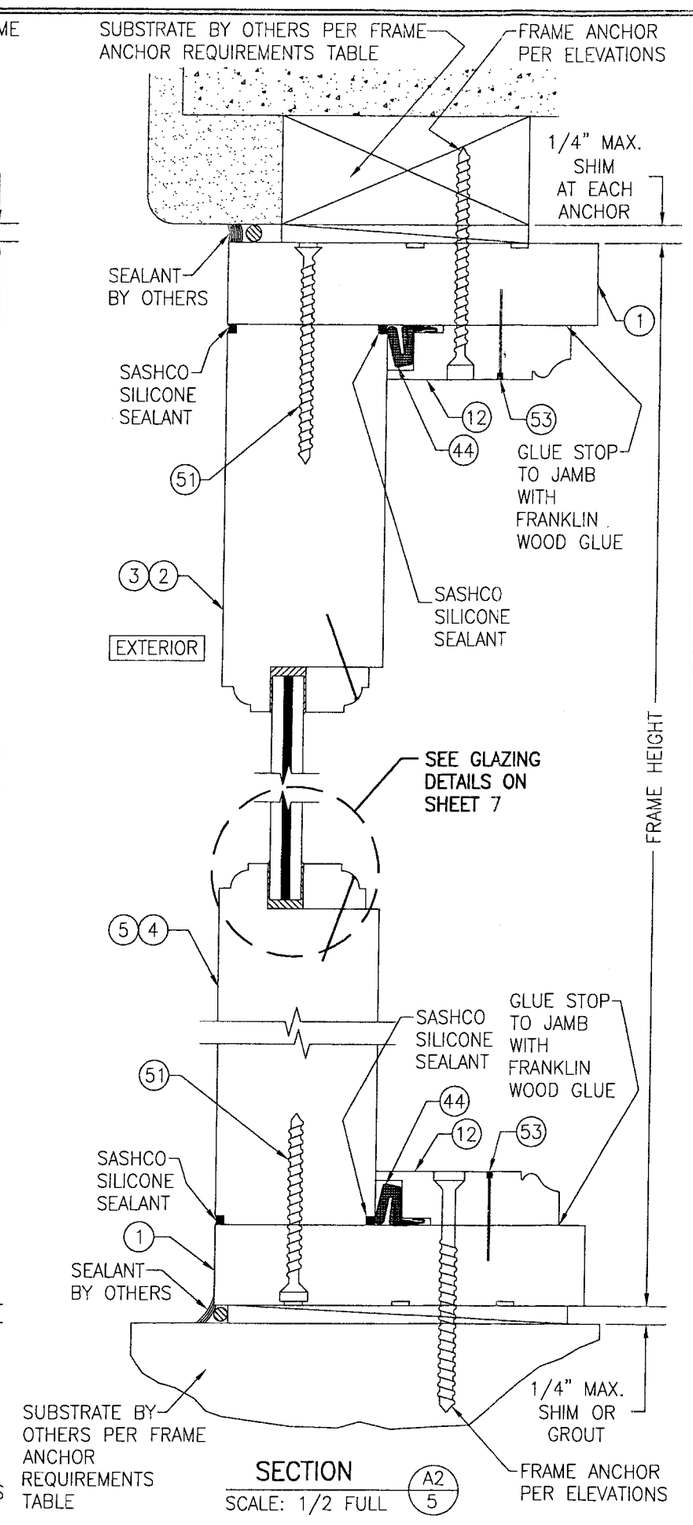

SECTION A2/5
SCALE: 1/2 FULL

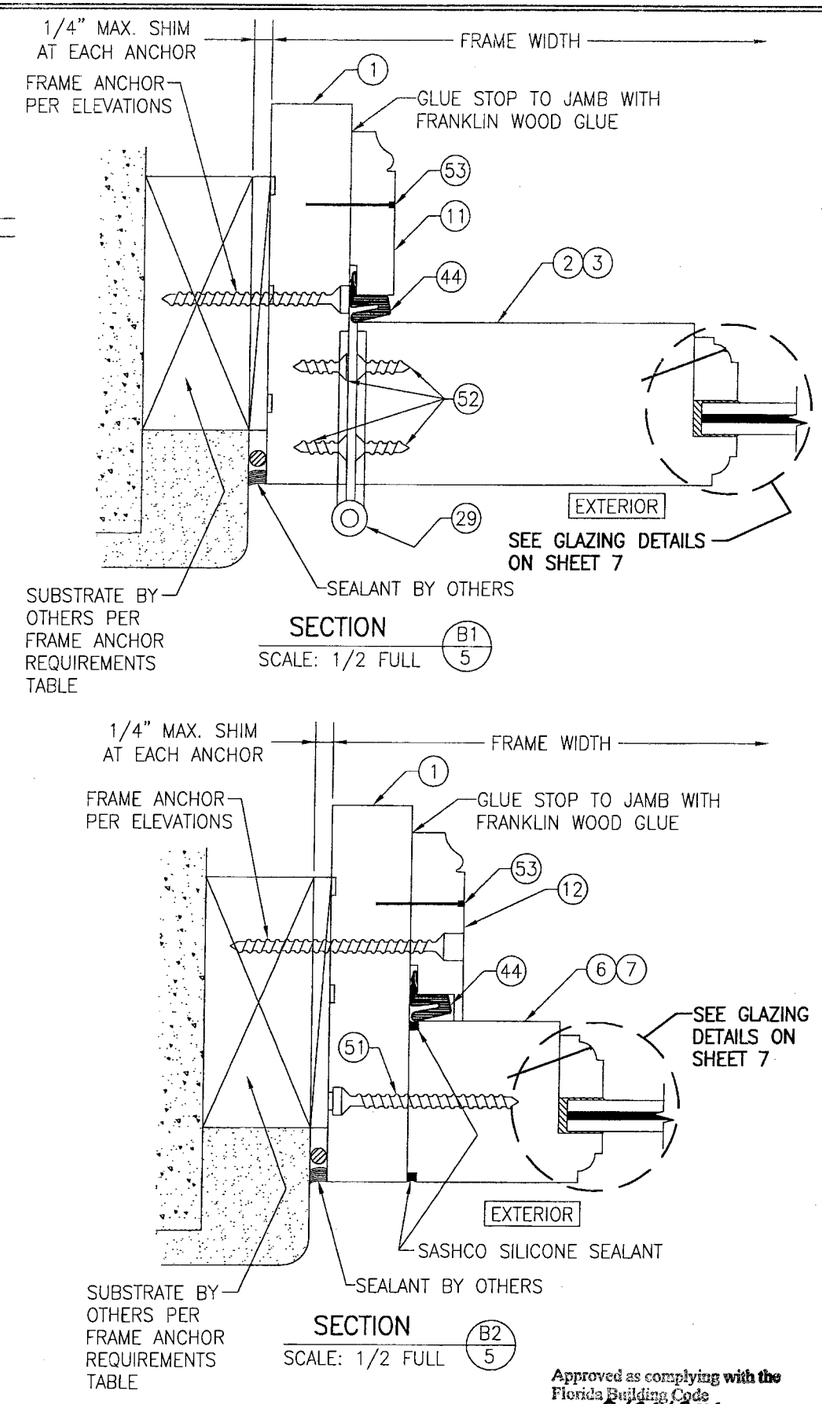

SECTION B1/5
SCALE: 1/2 FULL

SECTION B2/5
SCALE: 1/2 FULL

Approved as complying with the Florida Building Code
Date 09/04/2004
NOA# 08-0604.06
Miami-Dade Product Control Division
By

DRAWN BY: W.R.M	CHECKED BY: W.W.S.
PLOT: 1=2	DATE: 03/22/08

NO.	REVISION DESCRIPTION	BY	DATE

DRAWING TITLE
10 FOOT WOOD OUT-SWING IMPACT FRENCH DOORS

MANUFACTURER
PALM CITY MILLWORK, INC.
3313 S.W. 42ND AVE.
PALM CITY, FL 34990
800-273-5598

CONSULTANTS
W. W. SCHAEFER ENGINEERING & CONSULTING, P.A.
8895 N. MILITARY TRAIL, SUITE C-204
PALM BEACH GARDENS, FL 33410
PHONE: 561-775-4902 FAX: 561-775-4903

CERTIFICATION
APR 2 7 2008
WARREN W. SCHAEFER, P.E.
P.E. NO. 44135

DRAWING NO. 1470A
REV.
SHEET NO. 5 OF 9

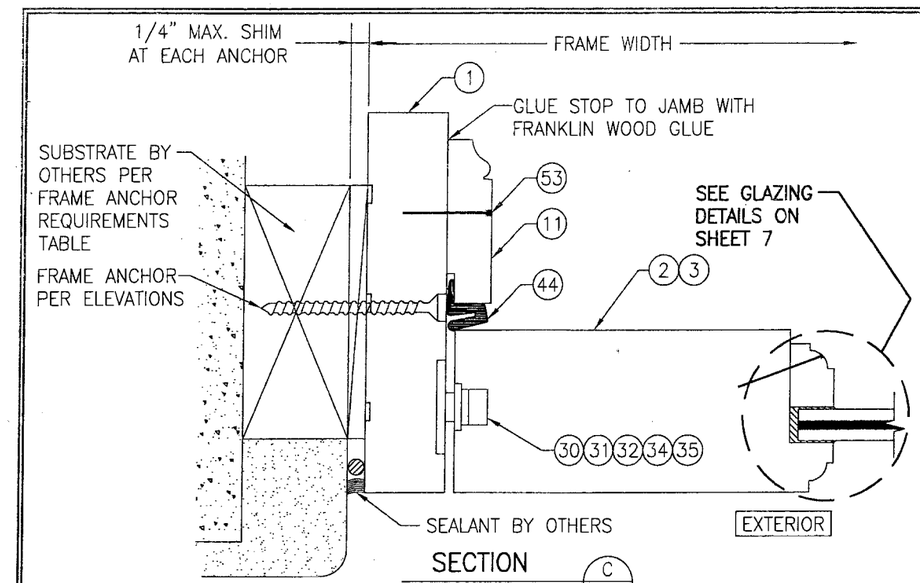

SECTION C/6
SCALE: 1/2 FULL

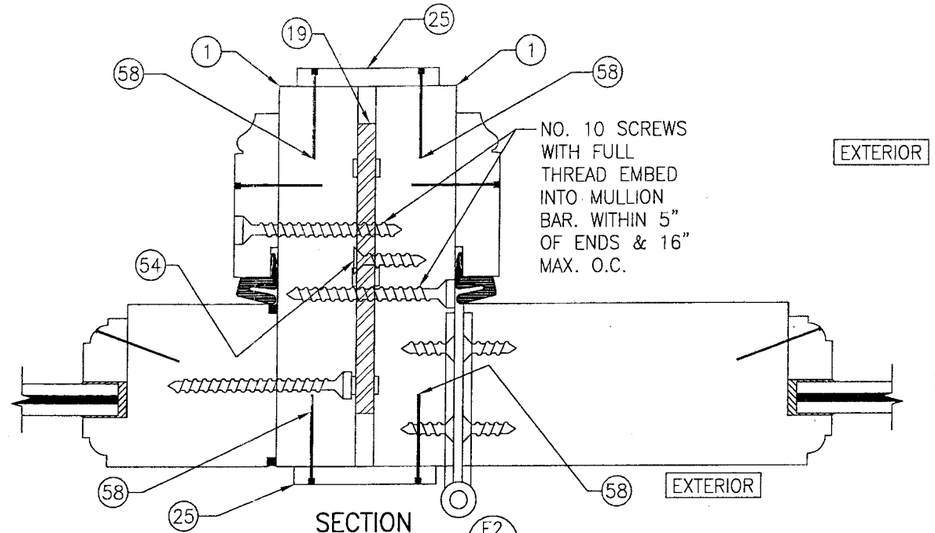

SECTION E2/6
SCALE: 1/2 FULL
(FOR DETAIL NOT SHOWN, SEE OTHER SECTIONS)

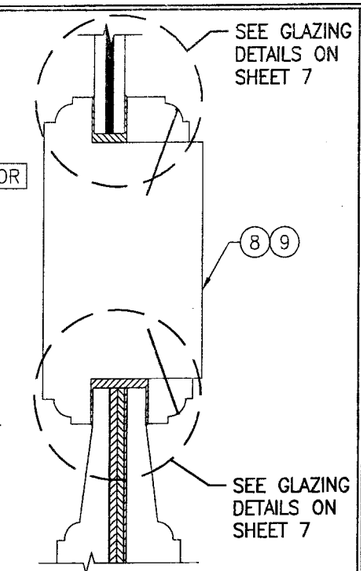

SECTION F/6
SCALE: 1/2 FULL
(RAISED PANEL)

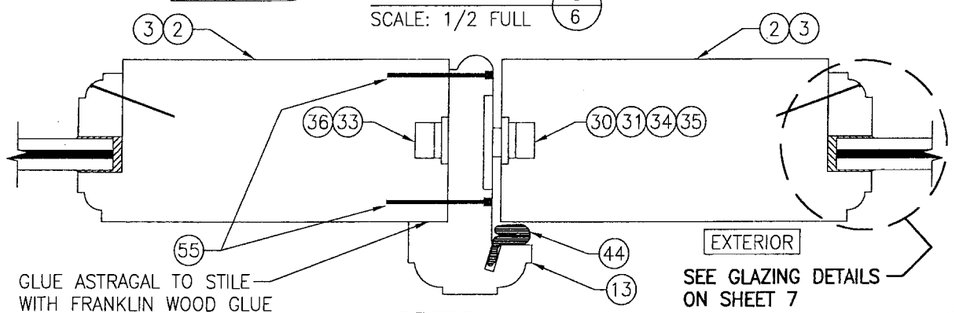

SECTION D/6
SCALE: 1/2 FULL

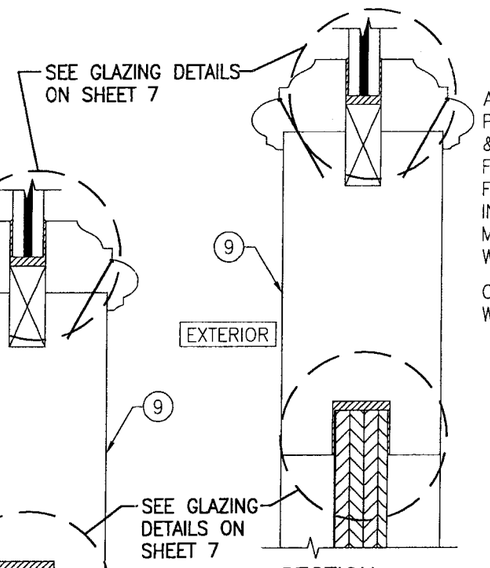

SECTION H/6
SCALE: 1/2 FULL
(LOUVERED PANEL)

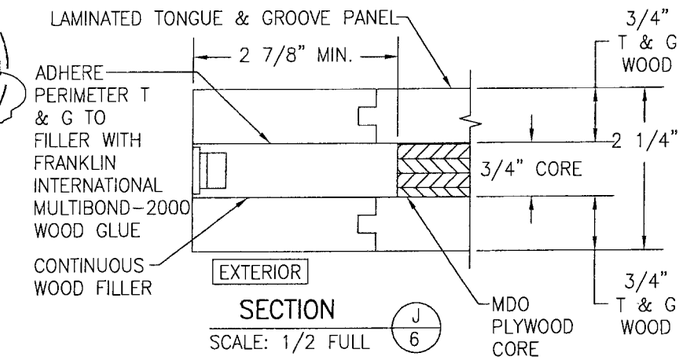

SECTION J/6
SCALE: 1/2 FULL

Approved as complying with the Florida Building Code
Date 09/04/2008
NOA# 08-0604.06
Miami-Dade Product Control Division
By

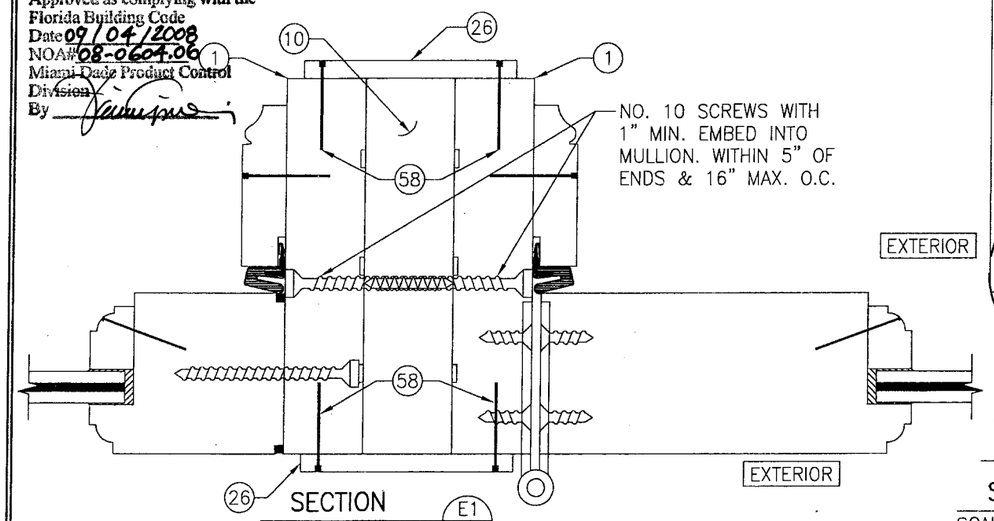

SECTION E1/6
SCALE: 1/2 FULL
(FOR DETAIL NOT SHOWN, SEE OTHER SECTIONS)

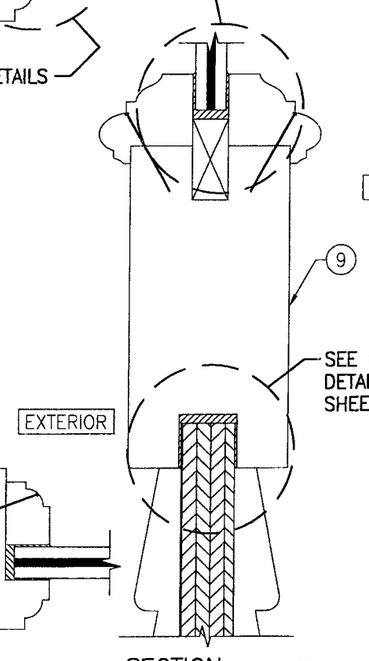

SECTION G/6
SCALE: 1/2 FULL
(LOUVERED PANEL)

WOOD MATERIAL USED WITH PANELS MAY BE MAHOGANY OR ALTERNATE WOOD SPECIES SPECIFIED ON SHEET 9

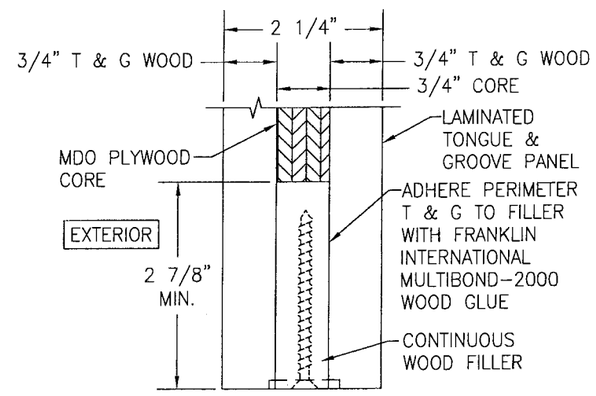

SECTION K/6
SCALE: 1/2 FULL
(TONGUE & GROOVE PANEL)

DRAWN BY: W.R.M	CHECKED BY: W.W.S.
PLOT: 1=2	DATE: 03/22/08

NO.	REVISION DESCRIPTION	BY	DATE

DRAWING TITLE
10 FOOT WOOD OUT-SWING IMPACT FRENCH DOORS

MANUFACTURER
PALM CITY MILLWORK, INC.
3313 S.W. 42ND AVE.
PALM CITY, FL 34990
800-273-5598

CONSULTANTS
W. W. SCHAEFER ENGINEERING & CONSULTING, P.A.
8895 N. MILITARY TRAIL, SUITE C-204
PALM BEACH GARDENS, FL 33410
PHONE: 561-775-4902 FAX: 561-775-4903

CERTIFICATION
APR 2 4 2008
WARREN W. SCHAEFER, P.E.
P.E. NO. 44135

DRAWING NO. 1470A
REV.
SHEET NO. 6 OF 9

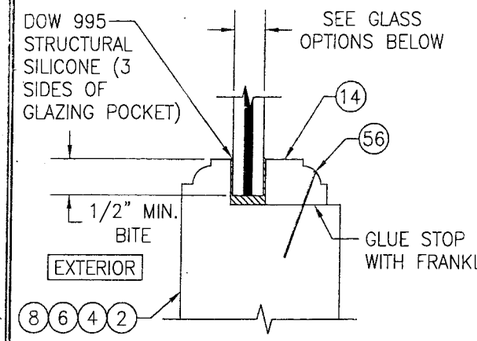

GLAZING DETAIL 1

(OVOLO STICKING METHOD)
SCALE: 1/2 FULL

GLASS OPTION 1: 7/16" THICK SOLUTIA VANCEVA LAMINATED GLASS (3/16" AN./0.075" VANCEVA/3/16" AN.)
GLASS OPTION 2: 7/16" THICK DUPONT SGP LAMINATED GLASS (3/16" AN./0.090" SGP/3/16" AN.)

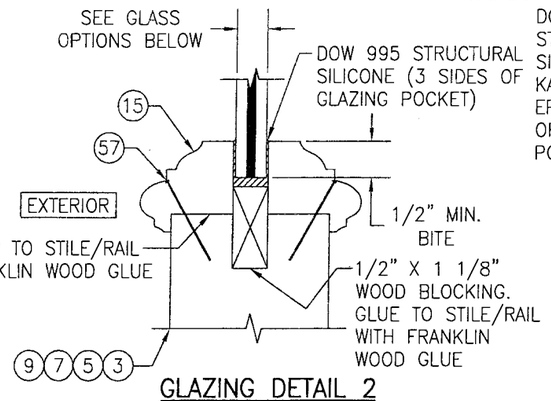

GLAZING DETAIL 2

(BOLECTION MOLDING METHOD)
SCALE: 1/2 FULL

GLASS OPTION 1: 7/16" THICK SOLUTIA VANCEVA LAMINATED GLASS (3/16" AN./0.075" VANCEVA/3/16" AN.)
GLASS OPTION 2: 7/16" THICK DUPONT SGP LAMINATED GLASS (3/16" AN./0.090" SGP/3/16" AN.)

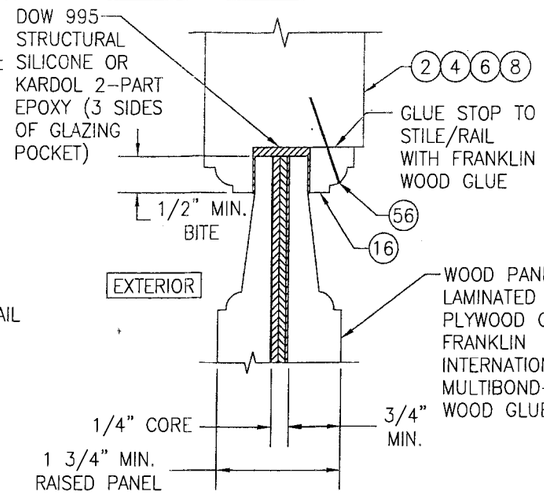

GLAZING DETAIL 3

(OVOLO STICKING METHOD)
SCALE: 1/2 FULL

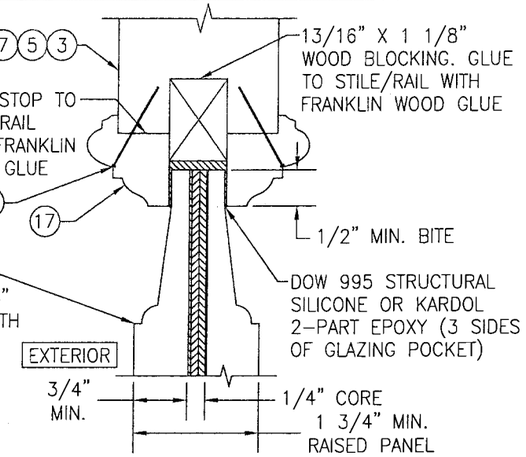

GLAZING DETAIL 4

(BOLECTION MOLDING METHOD)
SCALE: 1/2 FULL

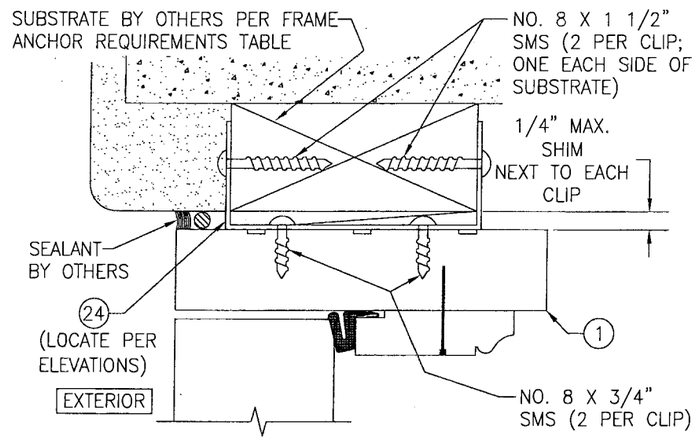

OPTIONAL CLIP MOUNT DETAIL

FOR DETAIL NOT SHOWN, SEE OTHER SECTIONS
(HEAD SECTION SHOWN, SIDES AND SILL SIMILAR)

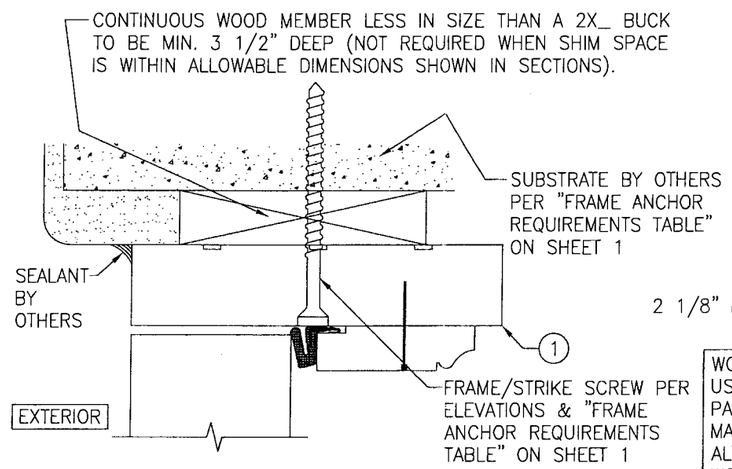

OPTIONAL DIRECT MOUNT DETAIL TO SUBSTRATE WITH SPACER

(HEAD SECTION SHOWN, SIDES ARE INSTALLED THE SAME)
(FOR DETAIL NOT SHOWN, SEE OTHER SECTIONS)

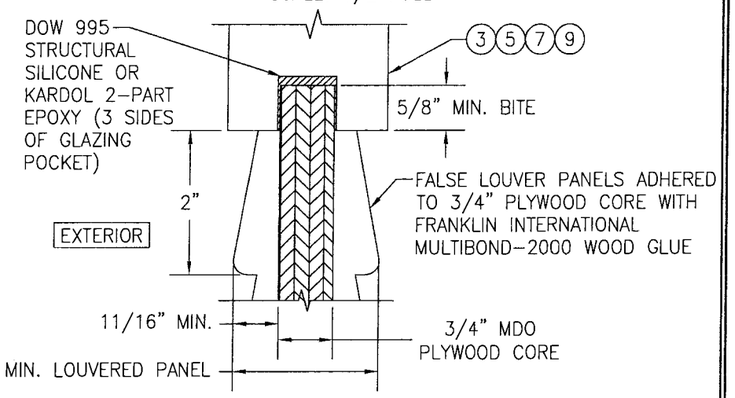

GLAZING DETAIL 5

(LOUVERED PANEL)
SCALE: 1/2 FULL

WOOD MATERIAL USED WITH PANELS MAY BE MAHOGANY OR ALTERNATE WOOD SPECIES SPECIFIED ON SHEET 9

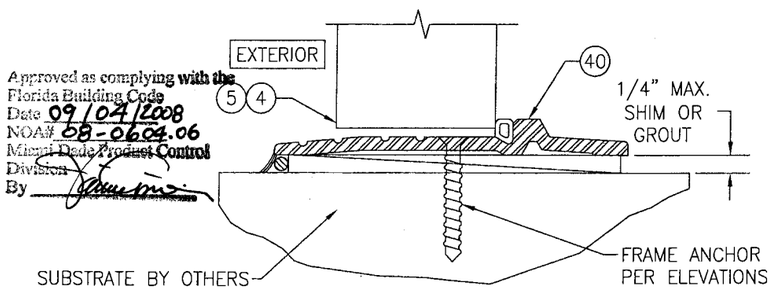

Approved as complying with the Florida Building Code
Date 09/04/2008
NOA# 08-0604.06
Miami-Dade Product Control Division
By

OPTIONAL ADA THRESHOLD DETAIL

(FOR DETAIL NOT SHOWN, SEE OTHER SECTIONS)

ADA THRESHOLD MAY NOT BE USED WITH MULLED UNITS UNLESS A CLIPPED MULLION UNDER SEPERATE APPROVAL IS USED

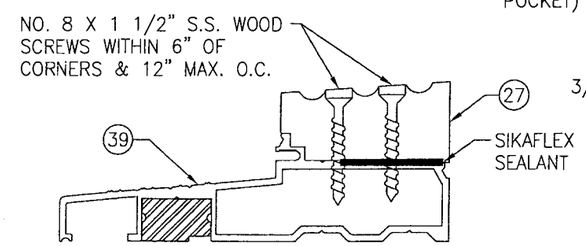

OPTIONAL THRESHOLD CAP DETAIL

(FOR DETAIL NOT SHOWN, SEE OTHER SECTIONS)

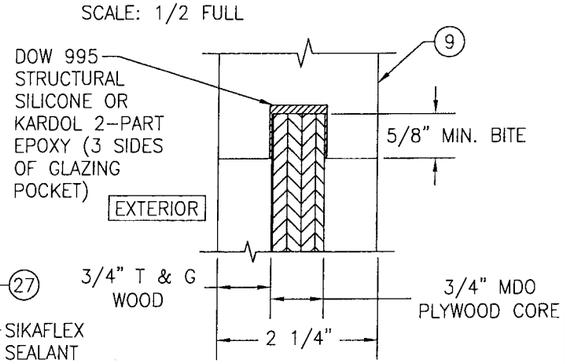

GLAZING DETAIL 6

(TONGUE & GROOVE PANEL)
SCALE: 1/2 FULL

DRAWN BY: W.R.M	CHECKED BY: W.W.S.
PLOT: 1=2	DATE: 03/22/08

NO.	REVISION DESCRIPTION	BY	DATE

DRAWING TITLE: 10 FOOT WOOD OUT-SWING IMPACT FRENCH DOORS

MANUFACTURER: PALM CITY MILLWORK, INC.
3313 S.W. 42ND AVE.
PALM CITY, FL 34990
800-273-5598

CONSULTANTS: W. W. SCHAEFER ENGINEERING & CONSULTING, P.A.
8895 N. MILITARY TRAIL; SUITE C-204
PALM BEACH GARDENS, FL 33410
PHONE: 561-775-4902 FAX: 561-775-4903

CERTIFICATION: APR 24 2008
WARREN W. SCHAEFER, P.E.
P.E. NO. 44135

DRAWING NO. 1470A
REV.
SHEET NO. 7 OF 9

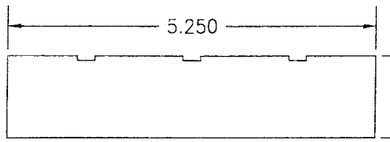

1 JAMB

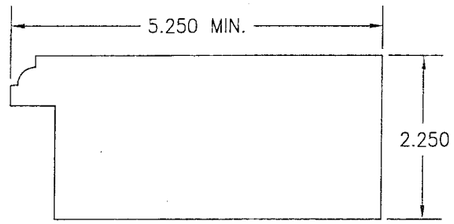

2 TOP RAIL & STILES
(USED WITH OVOLO STICKING METHOD)

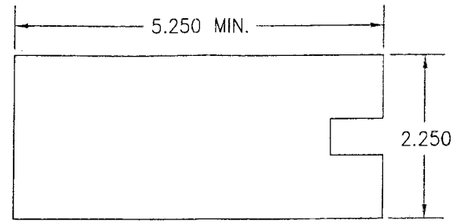

3 TOP RAIL & STILES
(USED WITH BOLECTION MOLDING METHOD)

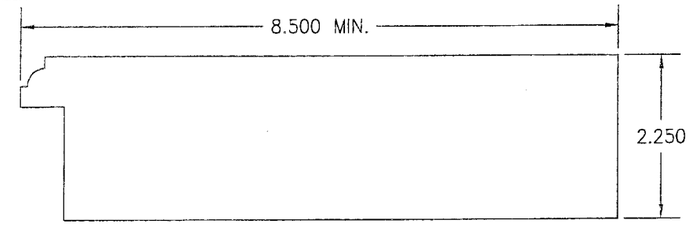

4 SILL RAIL
(USED WITH OVOLO STICKING METHOD)

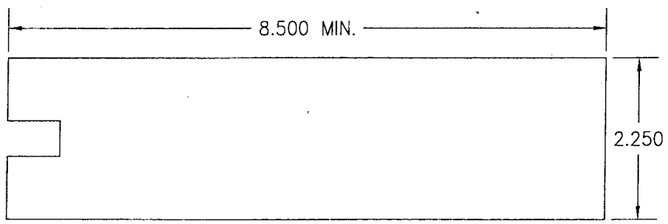

5 SILL RAIL
(USED WITH BOLECTION MOLDING METHOD)

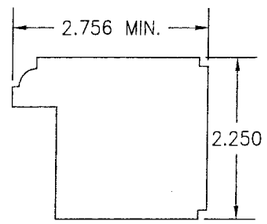

6 STILE (FIXED UNITS)
(USED WITH OVOLO STICKING METHOD)

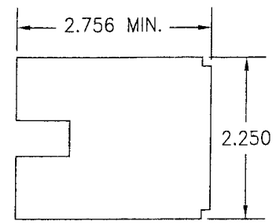

7 STILE (FIXED UNITS)
(USED WITH BOLECTION MOLDING METHOD)

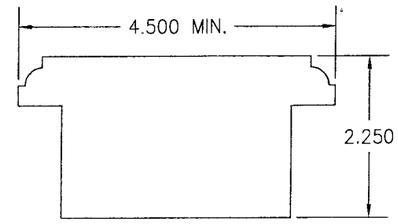

8 MID-RAIL
(USED WITH OVOLO STICKING METHOD)

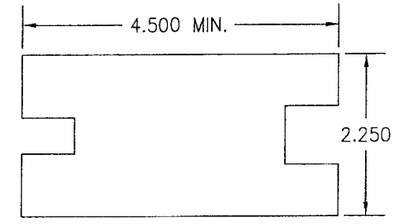

9 MID-RAIL
(USED WITH BOLECTION MOLDING METHOD)

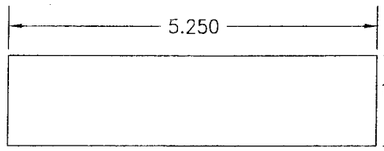

10 VERTICAL MULLION

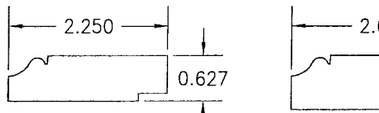

11 ACTIVE DOOR STOP

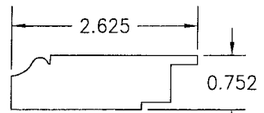

12 FIXED DOOR STOP

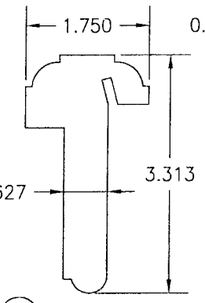

13 T-ASTRAGAL

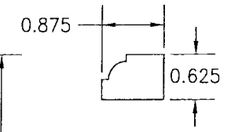

14 GLAZING STOP
(USED WITH OVOLO STICKING METHOD)

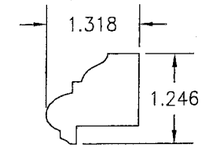

15 GLAZING STOP
(USED WITH BOLECTION MOLDING METHOD)

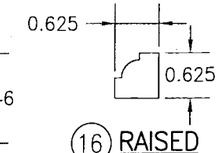

16 RAISED PANEL GLAZING STOP
(USED WITH OVOLO STICKING METHOD)

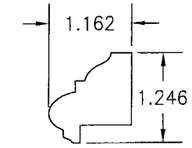

17 RAISED PANEL GLAZING STOP
(USED WITH BOLECTION MOLDING METHOD)

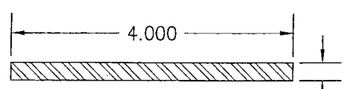

19 VERTICAL MULLION REINFORCEMENT

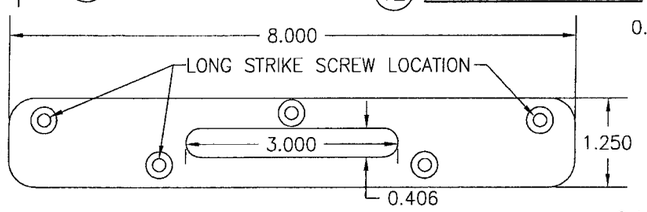

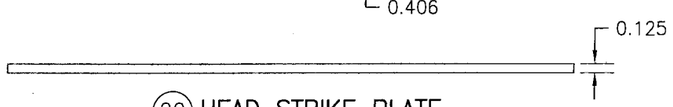

20 HEAD STRIKE PLATE

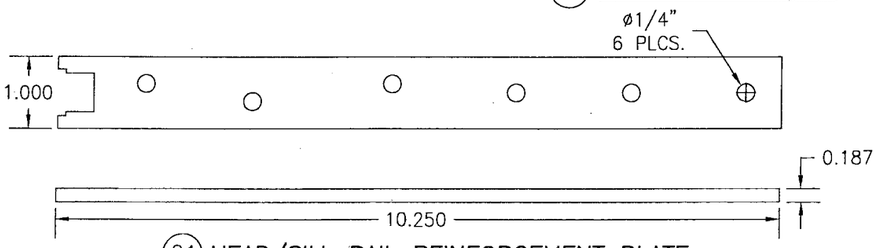

21 HEAD/SILL RAIL REINFORCEMENT PLATE
(DOUBLE DOOR – ACTIVE DOOR)
(REQ'D WITH HOPPE MULTIPOINT)

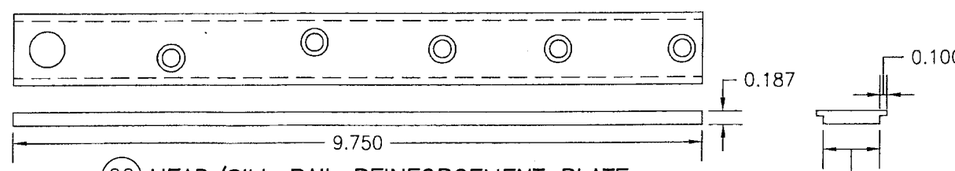

22 HEAD/SILL RAIL REINFORCEMENT PLATE
(DOUBLE DOOR – ACTIVE DOOR)
(REQ'D WITH KFV MULTIPOINT)

Approved as complying with the Florida Building Code
Date 09/04/2008
NOA# 08-0604.06
Miami-Dade Product Control Division
By

DRAWN BY: W.R.M	CHECKED BY: W.W.S.
PLOT: 1=2	DATE: 03/22/08

NO.	REVISION DESCRIPTION	BY	DATE

DRAWING TITLE
10 FOOT WOOD OUT-SWING IMPACT FRENCH DOORS

MANUFACTURER
PALM CITY MILLWORK, INC.
3313 S.W. 42ND AVE.
PALM CITY, FL 34990
800-273-5598

CONSULTANTS
W. W. SCHAEFER ENGINEERING & CONSULTING, P.A.
8895 N. MILITARY TRAIL; SUITE C-204
PALM BEACH GARDENS, FL 33410
PHONE: 561-775-4902 FAX: 561-775-4903

CERTIFICATION
APR 24 2008
WARREN W. SCHAEFER, P.E.
P.E. NO. 44135

DRAWING NO. 1470A
REV.
SHEET NO. 8 OF 9

ITEM #	ITEM DESCRIPTION	MANUFACTURER/NOTES
	PARTS	
1	JAMB	* WOOD
2	TOP RAIL & STILES	* WOOD (USED WITH OVOLO STICKING METHOD)
3	TOP RAIL & STILES	* WOOD (USED WITH BOLECTION MOLDING METHOD)
4	SILL RAIL	* WOOD (USED WITH OVOLO STICKING METHOD)
5	SILL RAIL	* WOOD (USED WITH BOLECTION MOLDING METHOD)
6	STILE (FIXED UNITS)	* WOOD (USED WITH OVOLO STICKING METHOD)
7	STILE (FIXED UNITS)	* WOOD (USED WITH BOLECTION MOLDING METHOD)
8	MID-RAIL	* WOOD (USED WITH OVOLO STICKING METHOD)
9	MID-RAIL	* WOOD (USED WITH BOLECTION MOLDING METHOD)
10	VERTICAL MULLION	CONTINUOUS 1 1/4" * WOOD
11	ACTIVE DOOR STOP	* WOOD
12	FIXED DOOR STOP	* WOOD
13	T-ASTRAGAL	* WOOD
14	GLAZING STOP	* WOOD (USED WITH OVOLO STICKING METHOD)
15	GLAZING STOP	* WOOD (USED WITH BOLECTION MOLDING METHOD)
16	RAISED PANEL GLAZING STOP	* WOOD (USED WITH OVOLO STICKING METHOD)
17	RAISED PANEL GLAZING STOP	* WOOD (USED WITH BOLECTION MOLDING METHOD)
19	VERTICAL MULLION REINFORCEMENT	CONTINUOUS 1/4" X 4" A36 STEEL
20	HEAD STRIKE PLATE	6063-T5 ALUMINUM (DOUBLE DOOR ONLY)
21	HEAD/SILL RAIL REINFORCEMENT PLATE	304 S.S. REQ'D WITH HOPPE MULTIPOINT
22	HEAD/SILL RAIL REINFORCEMENT PLATE	304 S.S. REQ'D WITH KFV MULTIPOINT
23	HEAD/SILL RAIL REINFORCEMENT PLATE	304 S.S. REQ'D WITH ASHLEY NORTON DEADBOLT
24	INSTALLATION CLIP	MIN. 33 KSI GALVANIZED STEEL
25	MULLION COVER	* WOOD
26	MULLION COVER	* WOOD
27	OPTIONAL THRESHOLD CAP	* WOOD
28	THRESHOLD CAP	6063-T5 ALUMINUM
	HARDWARE	
29	HINGE 5"x5"	BY: HAGER #1191/#1279 BRASS, S.S. OR PLATED STEEL
30	5-POINT LOCK HARDWARE	BY: KFV #AS7370
31	5-POINT LOCK HARDWARE	BY: HOPPE HLS 9000
32	4-POINT LOCK HARDWARE	BY: KFV #AS7370
33	2-POINT LOCK HARDWARE	BY: HOPPE HLS 9000
34	SINGLE LOCK & DEAD BOLT (MAY ONLY BE USED IN COMBINATION WITH ITEM #35)	BY: ASHLEY NORTON
35	FLUSH BOLT	BY: HAGER #282
36	CENTER ACTIVATED FLUSH BOLT	BY: HOPPE #878
37	SHOOT-BOLT THIMBLE	BY: GU #934442-00-0-0 BRASS
39	STANDARD THRESHOLD	BY: PALM CITY 6063-T5 ALUMINUM
40	ADA THRESHOLD	BY: PEMKO #2005/6063-T5 ALUMINUM
	SEALS AND SEALANTS	
44	WEATHER STRIP	BY: SCHLEGEL #A-12000
47	WEATHER STRIP	BY: SCHLEGEL #3704-8941

ITEM #	ITEM DESCRIPTION	MANUFACTURER/NOTES
	FASTENERS	
50	NO. 10 X 2 1/2" FH S.S. SMS	6 PER REINFORCEMENT PLATE
51	NO. 10 X 2 1/2" FH S.S. SMS	WITHIN 5" FROM ENDS & 16" MAX. O.C.
52	NO. 12 X 1 1/8" FH S.S. WOOD SCREW	4-PER HINGE INTO STILE & 4-PER HINGE INTO JAMB
53	15 GA. X 1 1/2" FINISH NAIL	WITHIN 5" OF ENDS & 12" MAX. O.C.
54	NO. 8 X 1" FH S.S. WOOD SCREW	AS REQ'D TO SET MULLION REINFORCEMENT
55	15 GA. X 1 1/2" FINISH NAIL	WITHIN 5" OF ENDS & 12" MAX. O.C. (2 ROWS)
56	18 GA. X 1 1/4" BRAD NAIL	WITHIN 2" OF ENDS & 5" MAX. O.C.
57	15 GA. X 1 1/4" FINISH NAIL	WITHIN 2" OF ENDS & 12" MAX. O.C.
58	18 GA. X 1 1/4" BRAD NAIL	WITHIN 2" OF ENDS & 12" MAX. O.C.

* ALL WOOD USED WITH TESTED UNITS IS MIN. GRADE 2 MAHOGANY. ALTERNATE WOOD SPECIES TO MAHOGANY ARE MIN. GRADE 2 RED OAK, HICKORY, BIRCH, DOUGLAS FIR, RED MAPLE AND REDWOOD.
NOTE: ALL WOOD IS RECEIVED BY PALM CITY MILLWORK AS GRADE 2, BUT IS MACHINED BY PALM CITY TO A SELECT GRADE USE.

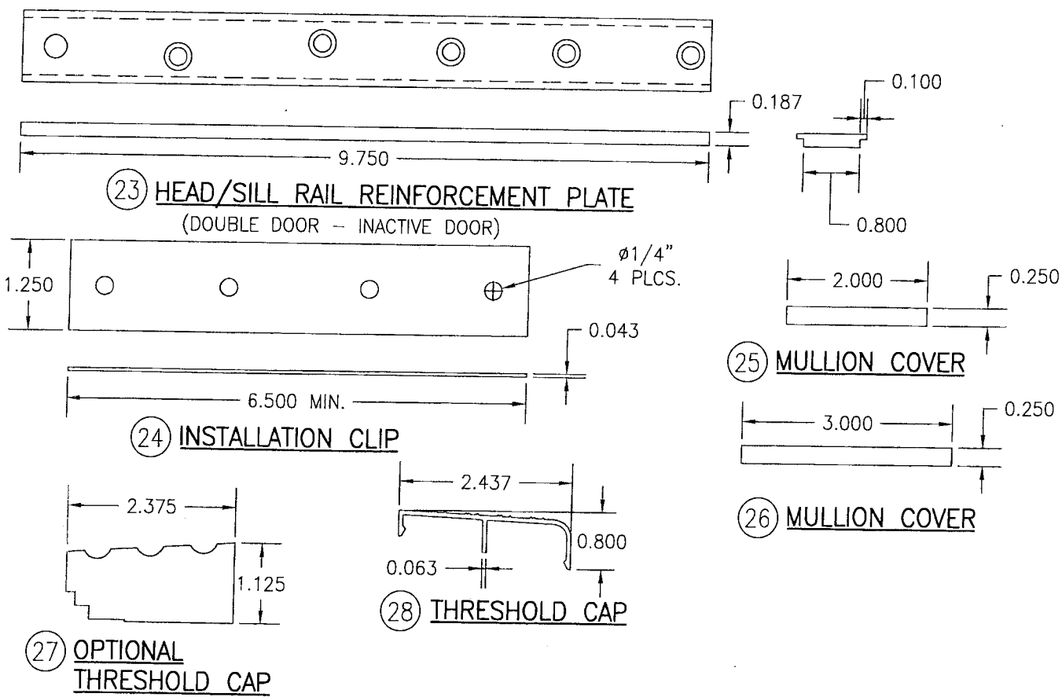

(23) HEAD/SILL RAIL REINFORCEMENT PLATE
(DOUBLE DOOR – INACTIVE DOOR)

(24) INSTALLATION CLIP

(25) MULLION COVER

(26) MULLION COVER

(27) OPTIONAL THRESHOLD CAP

(28) THRESHOLD CAP

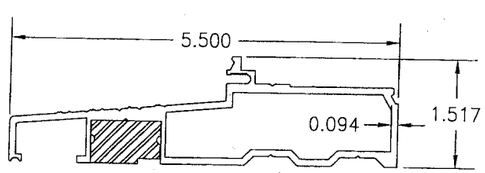

(39) STANDARD THRESHOLD

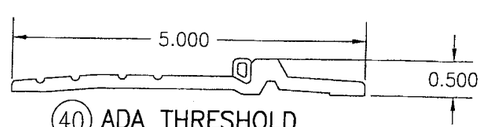

(40) ADA THRESHOLD

Approved as complying with the Florida Building Code
Date 09/04/2008
NOA# 08-0604.06
Miami-Dade Product Control Division
By

DRAWN BY: W.R.M	CHECKED BY: W.W.S.
PLOT: 1=2	DATE: 03/22/08

NO.	REVISION DESCRIPTION	BY	DATE

DRAWING TITLE: 10 FOOT WOOD OUT-SWING IMPACT FRENCH DOORS

MANUFACTURER: PALM CITY MILLWORK, INC.
3313 S.W. 42ND AVE.
PALM CITY, FL 34990
800-273-5598

CONSULTANTS: W. W. SCHAEFER ENGINEERING & CONSULTING, P.A.
8895 N. MILITARY TRAIL; SUITE C-204
PALM BEACH GARDENS, FL 33410
PHONE: 561-775-4902 FAX: 561-775-4903

CERTIFICATION: APR 24 2008
WARREN W. SCHAEFER, P.E.
P.E. NO. 44135

DRAWING NO. 1470A | REV.

SHEET NO. 9 OF 9