MIAMI-DADE COUNTY
BUILDING CODE COMPLIANCE OFFICE (BCCO)
PRODUCT CONTROL DIVISION

MIAMI-DADE COUNTY, FLORIDA
METRO-DADE FLAGLER BUILDING

140 WEST FLAGLER STREET, SUITE 1603
MIAMI, FLORIDA 33130-1563
(305) 375-2901 FAX (305) 375-2908
www.miamidade.gov

NOTICE OF ACCEPTANCE (NOA)

Birdview Skylights
201 Longhorn Road
Fort Worth, TX 76179

Scope: This NOA is being issued under the applicable rules and regulations governing the use of construction materials. The documentation submitted has been reviewed by Miami-Dade County Product Control Division and accepted by the Board of Rules and Appeals (BORA) to be used in Miami Dade County and other areas where allowed by the Authority Having Jurisdiction (AHJ).

This NOA shall not be valid after the expiration date stated below. The Miami-Dade County Product Control Division (In Miami Dade County) and/or the AHJ (in areas other than Miami Dade County) reserve the right to have this product or material tested for quality assurance purposes. If this product or material fails to perform in the accepted manner, the manufacturer will incur the expense of such testing and the AHJ may immediately revoke, modify, or suspend the use of such product or material within their jurisdiction. BORA reserves the right to revoke this acceptance, if it is determined by Miami-Dade County Product Control Division that this product or material fails to meet the requirements of the applicable building code.

This product is approved as described herein, and has been designed to comply with the High Velocity Hurricane Zone of the Florida Building Code.
DESCRIPTION: Aluminum Framed Polycarbonate Domed Skylight.
APPROVAL DOCUMENT: Drawing No. DADE608.1, model "6SF-DADE ", sheets 1 & 2 of 2, prepared by Birdview Skylights dated February 05, 2008, signed and sealed by Vipin N. Tolat, P.E., on July 08, 2008, bearing the Miami-Dade County Product Control Revision stamp with the Notice of Acceptance number and the expiration date by the Miami-Dade County Product Control Division.
MISSILE IMPACT RATING: Large & Small Missile Impact
LABELING: Each unit shall bear a permanent label with the manufacturer's name or logo, city, state and the following statement: "Miami-Dade County Product Control Approved", unless otherwise noted herein and the dome shall be properly marked by GE Plastics.
RENEWAL of this NOA shall be considered after a renewal application has been filed and there has been no change in the applicable building code negatively affecting the performance of this product.
TERMINATION of this NOA will occur after the expiration date or if there has been a revision or change in the materials, use, and/or manufacture of the product or process. Misuse of this NOA as an endorsement of any product, for sales, advertising or any other purposes shall automatically terminate this NOA. Failure to comply with any section of this NOA shall be cause for termination and removal of NOA.
ADVERTISEMENT: The NOA number preceded by the words Miami-Dade County, Florida, and followed by the expiration date may be displayed in advertising literature. If any portion of the NOA is displayed, then it shall be done in its entirety.
INSPECTION: A copy of this entire NOA shall be provided to the user by the manufacturer or its distributors and shall be available for inspection at the job site at the request of the Building Official.
This NOA **revises & renews NOA # 03-0303.11** and it consists of this page 1, evidence submitted pages E-1 & E-2 as well as approval document mentioned above.
The submitted documentation was reviewed by **Helmy A. Makar, P.E., M.S.**

MIAMI-DADE COUNTY APPROVED

Helmy A. Makar
07/31/2008

NOA No. 08-0611.09
Expiration Date: 07/02/2013
Approval Date: 07/31/2008

Birdview Skylights

NOTICE OF ACCEPTANCE: EVIDENCE SUBMITTED

1. EVIDENCE SUBMITTED UNDER PREVIOUS APPROVAL #03-0303.11

A. DRAWINGS

1. *Drawing No. EB696, sheets 1 & 1, model "6SFD-DADE", prepared by Birdview Skylights, dated 07/26/00, with no revisions, signed and sealed by V. N. Tolat, P.E.*

B. TESTS

1. *Test report on Large Missile Impact Test per PA 201, Cyclic Load Test per PA 203 and Uniform Static air Pressure Test per PA 202, on "Series 6SFD-DADE Self Flashing Aluminum/Polycarbonate Skylight", prepared by Miami Testing Laboratory, report No. K-49362 issued on 09/10/96, signed and sealed by D. G. Ober, P.E.*

C. CALCULATIONS

1. *Anchor Calculation, sheets 2 through 5, dated 08/21/96 and signed by D. A. Terwilleger, PE.*

D. MATERIAL CERTIFICATIONS

1. *Notice of Acceptance No. 00-0718.02 issued to General Electric Company on 09/08/2000,expiring on 07/02/2003.*
2. *Extrusion drawings No. BVS-X10947-A & BVS 8554 by Tel Tower Extrusions, LTD for Birdview Skylights.*

E. STATEMENTS

1. *No change letter issued by Birdview Skylights, on 08/10/2000 and signed by E. Bird.*
1. *No change letter issued by Birdview Skylights on 02/11/03 and signed by G. E. Bird.*

2. NEW EVIDENCE SUBMITTED

A. DRAWINGS

1. *Drawing No. DADE608.1, model "6SF-DADE ", sheets 1 & 2 of 2, prepared by Birdview Skylights dated February 05, 2008, signed and sealed by Vipin N. Tolat, P.E., on July 08, 2008.*

B. TESTS

1. *Test report on Large Missile Impact Test per TAS 201, Cyclic Load Test per TAS 203 and Uniform Static air Pressure Test per TAS 202, on "Series 6SF-DADE Self Flashing Aluminum/Polycarbonate Skylight", prepared by American Test Lab of South Florida, report No. 0331.01-08, dated 05/23/2008, signed and sealed by William R. Mehner, P.E. and Henry Hattem, P.E.*

Helmy A. Makar, P.E., M.S.
Product Control Examiner
NOA No. 08-0611.09
Expiration Date: 07/02/2013
Approval Date: 07/31/2008

NOTICE OF ACCEPTANCE: EVIDENCE SUBMITTED

C. CALCULATIONS

1. *Anchor Calculation, sheets 1 through 3 of 3, dated 06/09/2008, signed and sealed by Vipin N. Tolat, P.E.*

D. QUALITY ASSURANCE

1. *By Miami-Dade County Building Code Compliance Office.*

E. MATERIAL CERTIFICATIONS

1. *None.*

Henry A. Makar, P.E., M.S.
Product Control Examiner
NOA No. 08-0611.09
Expiration Date: 07/02/2013
Approval Date: 07/31/2008

DIE NO.	BVS-X10947-A
BKR. NO.	I.A.9702
BOLS. NO.	I.B.255
FEEDER NO.	F.P.9702

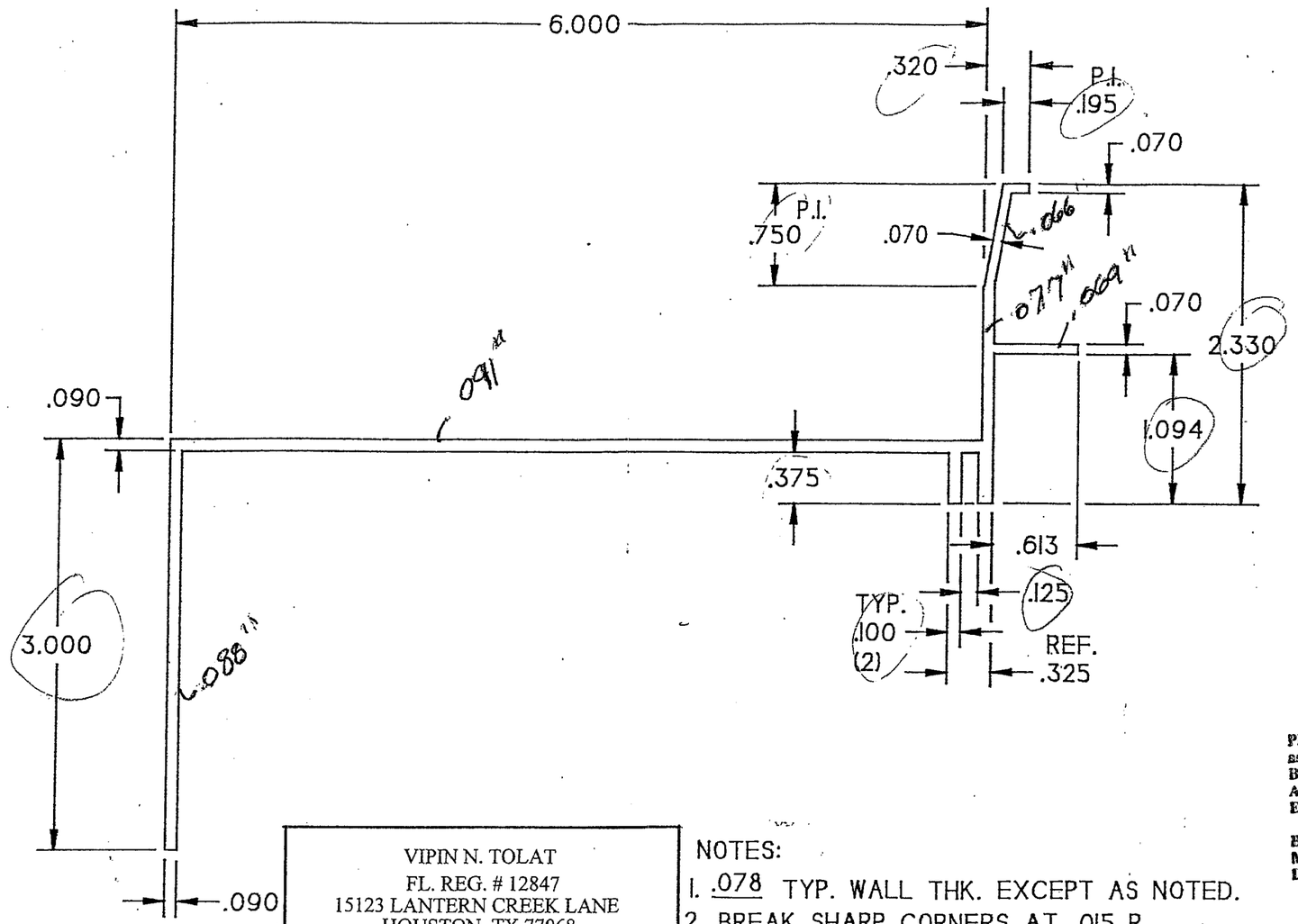

PRODUCT REVISED
as complying with the Florida
Buiding Code
Acceptance No 08-0611.09
Expiration Date 07/02/2013
By [signature]
Miami Dade Product Control
Division

VIPIN N. TOLAT
FL. REG. # 12847
15123 LANTERN CREEK LANE
HOUSTON, TX 77068

[signature]
7/8/08

NOTES:
1. .078 TYP. WALL THK. EXCEPT AS NOTED.
2. BREAK SHARP CORNERS AT .015 R.

BIRDVIEW SKYLIGHTS
THE CLEAR CHOICE
201 LONGHORN RD. FT. WORTH TX. 76179
TEL:817-439-9266 FAX:817-232-8468

DATE: 2- 5- 08	MODEL: 6SF-DADE
DRAWING# 608.1	DRAWN BY: E. BIRD
SHEET 2 OF 2	SCALE: NTS

REVISION
A WT/FT WAS 1.231 6-23-95 DL
ALUMINUM ASSOCIATION STANDARD TOLERANCES TO APPLY UNLESS OTHERWISE SPECIFIED

EST. AREA	1.076	CIRCLE SIZE	7-8	DATE: 4-28-95	DRAWN BY: D.LOUGH
EST. WT/FT.	1.291	FACTOR	19	HOLES 1	DIE SIZE 12X1.5
EST. PERIM.	24.952			SCALE	FULL

tel TOWER EXTRUSIONS, LTD.

NAME	BIRDVIEW SKYLIGHTS	
PART NO.		DWG. NO.
END USE	6" SELF-FLASHING	
CLASS SOLID	ALLOY 6063-T5	DIE NO. BVS-X10947-A

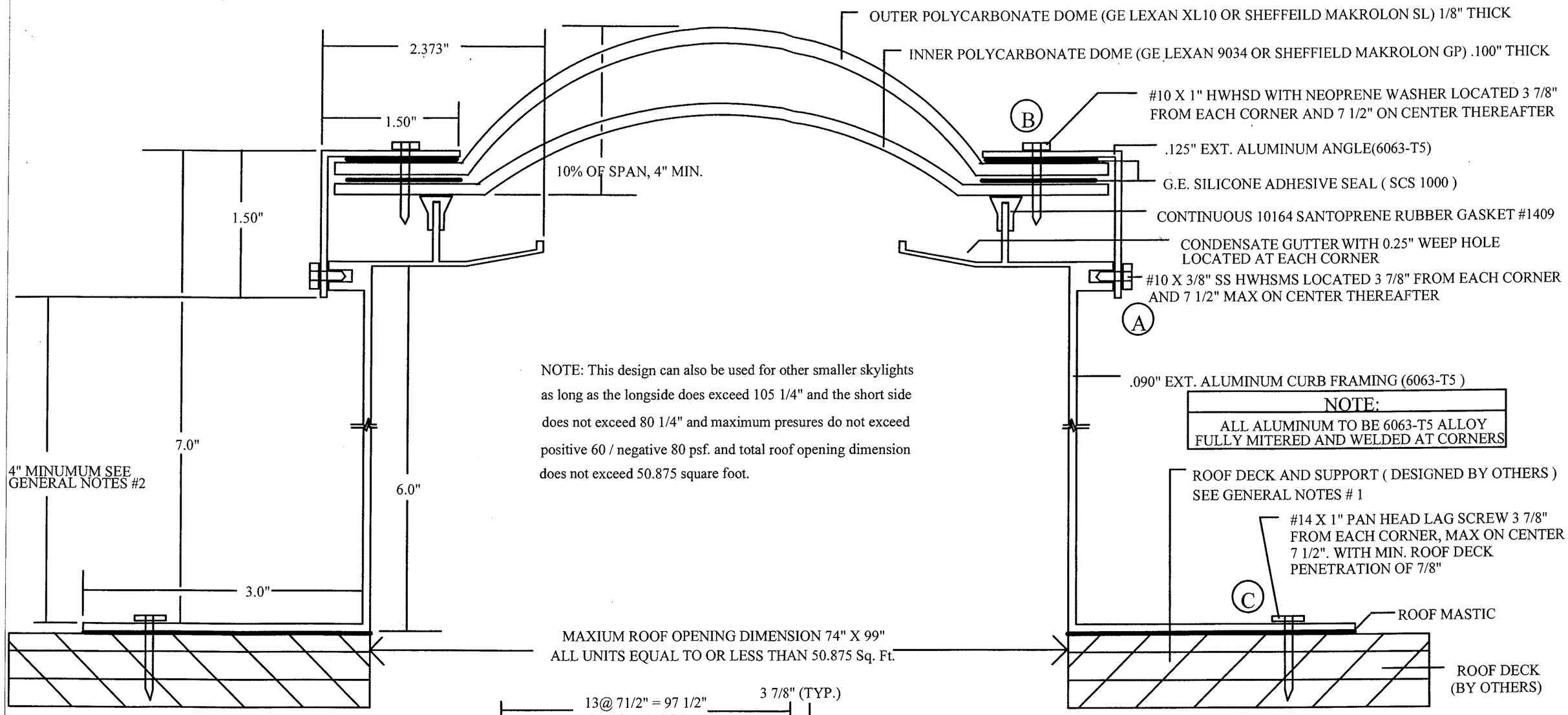

NOTE: This design can also be used for other smaller skylights as long as the longside does exceed 105 1/4" and the short side does not exceed 80 1/4" and maximum presures do not exceed positive 60 / negative 80 psf. and total roof opening dimension does not exceed 50.875 square foot.

NOTE:
ALL ALUMINUM TO BE 6063-T5 ALLOY FULLY MITERED AND WELDED AT CORNERS

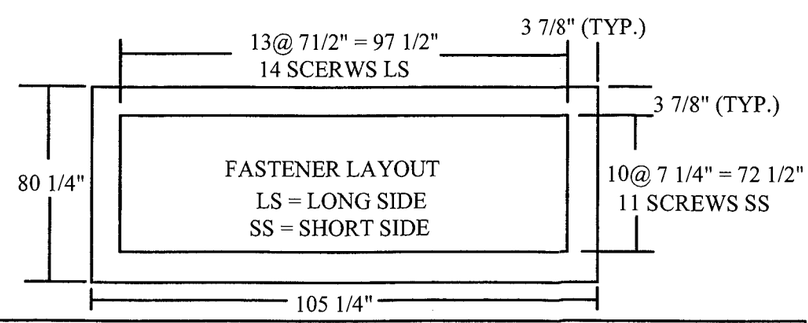

TOTAL 50 SCREWS AT LOCATIONS A,B & C FOR THIS SKYLIGHT. FOR OTHER SMALLER SIZES PROVIDE FASTENERS @ 7 1/2" ON CENTER EACH SIDE

DESIGN PRESSURE RATING	
POSITIVE + 60psf	NEGATIVE -80psf
LARGE MISSILE IMPACT RESISTANT	

VIPIN N. TOLAT
FL. REG. # 12847
15123 LANTERN CREEK LANE
HOUSTON, TX 77068

7/8/08

BIRDVIEW SKYLIGHTS
THE CLEAR CHOICE
201 LONGHORN RD. FT. WORTH TX. 76179
TEL: 817-439-9266 FAX: 817-232-8468

DATE: 2 - 5 - 08	MODEL: 6SF - DADE
DRAWING # DADE608.1	DRAWN BY : E. BIRD
SHEET 1 OF 2	SCALE: NTS

GENERAL NOTES

1. ALL ROOFING DETAILS SHALL COMPLY WITH FBC 2007
2. 4" MINIMUM DISTANCE FROM ANGLE LIP TO ROOF SURFACE IS FOR SHINGLE OR BUR WITHOUT INSULATION
   FOR INSULATION AND ROOF TILES, ADD THE TILE HIEGHT AND THE INSULATION THICKNESS TO THE 4" MINIMUM HEIGHT.

PRODUCT REVISED
as complying with the Florida Buiding Code
Acceptance No 08-0611.09
Expiration Date 07/02/2013
By Helena A. Melo
Miami Dade Product Control Division