MIAMI-DADE

BUILDING CODE COMPLIANCE OFFICE (BCCO)
PRODUCT CONTROL DIVISION

MIAMI-DADE COUNTY, FLORIDA
METRO-DADE FLAGLER BUILDING
140 WEST FLAGLER STREET, SUITE 1603
MIAMI, FLORIDA 33130-1563
(305) 375-2901 FAX (305) 375-2908

NOTICE OF ACCEPTANCE (NOA)

Florida Metal Products Inc.
P.O. Box 6310
Jacksonville, FL 32236-6310

SCOPE:
This NOA is being issued under the applicable rules and regulations governing the use of construction materials. The documentation submitted has been reviewed by Miami-Dade County Product Control Division and accepted by the Board of Rules and Appeals (BORA) to be used in Miami Dade County and other areas where allowed by the Authority Having Jurisdiction (AHJ).

This NOA shall not be valid after the expiration date stated below. The Miami-Dade County Product Control Division (In Miami Dade County) and/or the AHJ (in areas other than Miami Dade County) reserve the right to have this product or material tested for quality assurance purposes. If this product or material fails to perform in the accepted manner, the manufacturer will incur the expense of such testing and the AHJ may immediately revoke, modify, or suspend the use of such product or material within their jurisdiction. BORA reserves the right to revoke this acceptance, if it is determined by Miami-Dade County Product Control Division that this product or material fails to meet the requirements of the applicable building code.

This product is approved as described herein, and has been designed to comply with the Florida Building Code and the High Velocity Hurricane Zone of the Florida Building Code.

DESCRIPTION: RV10 Aluminum Ridge Vent

LABELING: Each unit shall bear a permanent label with the manufacturer's name or logo, city, state and following statement: "Miami-Dade County Product Control Approved", unless otherwise noted herein.

RENEWAL of this NOA shall be considered after a renewal application has been filed and there has been no change in the applicable building code negatively affecting the performance of this product.

TERMINATION of this NOA will occur after the expiration date or if there has been a revision or change in the materials, use, and/or manufacture of the product or process. Misuse of this NOA as an endorsement of any product, for sales, advertising or any other purposes shall automatically terminate this NOA. Failure to comply with any section of this NOA shall be cause for termination and removal of NOA.

ADVERTISEMENT: The NOA number preceded by the words Miami-Dade County, Florida, and followed by the expiration date may be displayed in advertising literature. If any portion of the NOA is displayed, then it shall be done in its entirety.

INSPECTION: A copy of this entire NOA shall be provided to the user by the manufacturer or its distributors and shall be available for inspection at the job site at the request of the Building Official.

This NOA renews NOA No. 07-1105.06 and consists of pages 1 through 3.
The submitted documentation was reviewed by Jorge L. Acebo.

MIAMI-DADE COUNTY APPROVED

NOA No.: 08-0611.10
Expiration Date: 01/31/13
Approval Date: 08/14/08

ROOFING SYSTEM APPROVAL

Category: Roofing
Sub-Category: Ventilation
Material: Aluminum

TRADE NAMES OF PRODUCTS MANUFACTURED OR LABELED BY APPLICANT:

Product	Dimensions	Test Specification	Product Description
RV10 Aluminum Ridge Vent	7-$^{5}/_{8}$" x 10'-0"	TAS 100(A)	Ridge ventilation system

EVIDENCE SUBMITTED:

Test Agency	Test Identifier	Description	Date
Center for Applied Engineering, Inc.	MTS 257414a	TAS 100(A)	September, 1995
PRI Construction Materials Technologies, LLC	FMP-003-02-01	TAS 100(A)	02/12/08

GENERAL LIMITATIONS:

1. Refer to applicable Building Code for required ventilation.
2. RV10 Aluminum Ridge Vent shall not be installed in conjunction with Gable vents.
3. RV10 Aluminum Ridge Vent. Shall comply with applicable building code.
4. RV10 Aluminum Ridge Vent shall not be installed on roof mean heights greater than 33 feet.
5. RV10 Aluminum Ridge Vent shall comply with 1517.6 of the Florida Building Code (FBC)
6. All approved products listed herein shall be labeled and shall bear the imprint or identifiable marking of the manufacturer's name or logo and following statement: "Miami-Dade County Product Control Approved" or the Miami-Dade County Product Control Seal as shown below.

MIAMI-DADE COUNTY APPROVED

APPROVED APPLICATIONS:

Trade name: RV10 Aluminum Ridge Vent

System Type A: Mechanical attachment of ridge vent system over asphalt composition shingles.

Cutout: Truss Construction: Cut shall be 2" wide, and length shall be 12" (plus overhang length) shorter on both sides of gable end or hips.

Ridge Pole Construction: Cut shall be 3-¼" wide, and length shall be 12" (plus overhang length) shorter on both sides of gable end or hips.

Installation: Install end plug on the end of the vent sealed with 100% silicone sealant. RV10 Aluminum Ridge Vent shall be 4" longer than ventilation slot as to provide a base for the end plug.

Apply ¼" wide bead of 100% silicone sealant caulk to the bottom flange of the RV10 Aluminum Ridge Vent sections close to where roof hole will be after vent is installed. Align end of first section on the end marks and the bottom of the nailing flange on the chalk line (4" down on both side of the ridge peak.) Nail the RV10 Aluminum Ridge Vent in place using 1½" aluminum ring shank roofing nails 6" o.c., with the first nail 1½" to 2" form the vent end. All nail heads and vent section joints shall be sealed with 100% silicone sealant.

Install Florida Metal Products, Inc. High Wind Straps over each end of ridge vent, all connections between sections, and at a maximum of 3 ft. intervals over the remainder of the vent using four 1-1½ " aluminum ring shank roofing nails per strap.

Ridge Shingle: None

Ventilation Calculations: Refer to manufacturer's published literature

Minimum Slope: 2:12

DETAIL

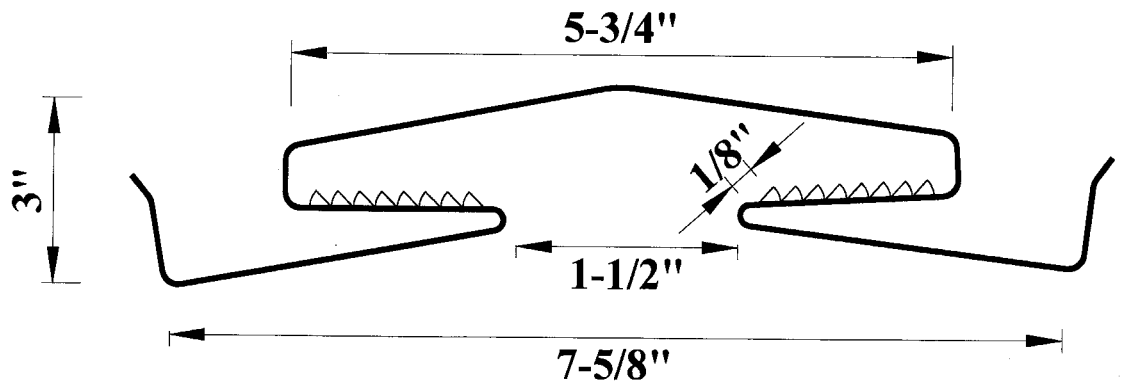

RV10 Aluminum Ridge Vent

END OF THIS ACCEPTANCE