MIAMI-DADE COUNTY

BUILDING CODE COMPLIANCE OFFICE (BCCO)
PRODUCT CONTROL DIVISION

MIAMI-DADE COUNTY, FLORIDA
METRO-DADE FLAGLER BUILDING
140 WEST FLAGLER STREET, SUITE 1603
MIAMI, FLORIDA 33130-1563
(305) 375-2901 FAX (305) 375-2908
www.buildingcodeonline.com

NOTICE OF ACCEPTANCE (NOA)

Miami Wall Systems, Inc.
701 W,25th Street
Hialeah, FL 33010

SCOPE:

This NOA is being issued under the applicable rules and regulations governing the use of construction materials. The documentation submitted has been reviewed by Miami-Dade County Product Control Division and accepted by the Board of Rules and Appeals (BORA) to be used in Miami Dade County and other areas where allowed by the Authority Having Jurisdiction (AHJ).

This NOA shall not be valid after the expiration date stated below. The Miami-Dade County Product Control Division (In Miami Dade County) and/or the AHJ (in areas other than Miami Dade County) reserve the right to have this product or material tested for quality assurance purposes. If this product or material fails to perform in the accepted manner, the manufacturer will incur the expense of such testing and the AHJ may immediately revoke, modify, or suspend the use of such product or material within their jurisdiction. BORA reserves the right to revoke this acceptance, if it is determined by Miami-Dade County Product Control Division that this product or material fails to meet the requirements of the applicable building code.

This product is approved as described herein, and has been designed to comply with the Florida Building Code, including the High Velocity Hurricane Zone.

DESCRIPTION: Series 2050, Aluminum Fixed Window, Large Missile

APPROVAL DOCUMENT: Drawing No. **2050-FW**, titled "Fixed Window Series 2050, sheets 1 through 5of 5, dated 07/07/08, prepared by Miami Wall Systems, Inc., signed and sealed by Jorge E. Valdes, P.E., bearing the Miami-Dade County Product Control approval stamp with the Notice of Acceptance number and approval date by the Miami-Dade County Product Control Division.

MISSILE IMPACT RATING: Large and Small Missile Impact Resistant

LABELING: Each unit shall bear a permanent label with the manufacturer's name or logo, city, state and following statement: "Miami-Dade County Product Control Approved", unless otherwise noted herein.

RENEWAL of this NOA shall be considered after a renewal application has been filed and there has been no change in the applicable building code negatively affecting the performance of this product.

TERMINATION of this NOA will occur after the expiration date or if there has been a revision or change in the materials, use, and/or manufacture of the product or process. Misuse of this NOA as an endorsement of any product, for sales, advertising or any other purposes shall automatically terminate this NOA. Failure to comply with any section of this NOA shall be cause for termination and removal of NOA.

ADVERTISEMENT: The NOA number preceded by the words Miami-Dade County, Florida, and followed by the expiration date may be displayed in advertising literature. If any portion of the NOA is displayed, then it shall be done in its entirety.

INSPECTION: A copy of this entire NOA shall be provided to the user by the manufacturer or its distributors and shall be available for inspection at the job site at the request of the Building Official.
This NOA consists of this page 1 and evidence pages E-1, as well as approval document mentioned above.
The submitted documentation was reviewed by **Mohammed Iqbal Shaikh, P.E.**

MIAMI-DADE COUNTY APPROVED 07/28/08

Miami Wall Systems, Inc.

NOTICE OF ACCEPTANCE: EVIDENCE SUBMITTED

A. DRAWINGS

1. Manufacturer's die drawings and sections.
2. Drawing No. **2060-CW**, titled "Casement Window Series 2060, sheets 1 through 5of 5, dated 02/08/08, prepared by Miami Wall Systems, Inc., signed and sealed by Jorge E. Valdes, P.E.,

B. TESTS

1. Test reports on 1) Air Infiltration Test, per FBC, TAS 202
   2) Uniform Static Air Pressure Test, Loading per FBC, TAS 202
   3) Water Resistance Test, per FBC, TAS 202
   4) Forced Entry Test, per FBC, TAS 202

   along with marked-up drawings and installation diagram of an aluminum casement window, prepared by Fenestration Testing Laboratory, Inc., Test Report No. **5595** dated 06/06/08, signed and sealed by Carlos Rionda, P.E.

C. CALCULATIONS

1. Anchor verification calculations, complying with FBC 2004, dated 06/09/08, prepared by Miami Wall Systems, Inc., signed and sealed by Jorge Valdes, P.E.
   Complies with ASTM E 1300-02.

D. QUALITY ASSURANCE BY:

1. Miami Dade Building Code Compliance Office (BCCO)

E. MATERIAL CERTIFICATIONS

1. Notice of Acceptance No. **05-1208.02** issued to E.I. DuPont DeNemours for their Dupont Butacite PVB Interlayer" dated 01/05/06, expiring on 12/11/10.

F. STATEMENTS

1 Statement letter of conformance, dated 06/09/08, signed and sealed by Jorge Valdes, P.E.

2. No Financial interest letter, dated 06/09/08, signed and sealed by Jorge Valdes, P.E.

Mohammed Iqbal Shaikh, P.E.
Sr. Building Code Compliance Specialist
NOA No 08-0611.11
Expiration Date: August 21, 2013
Approval Date: August 21, 2008

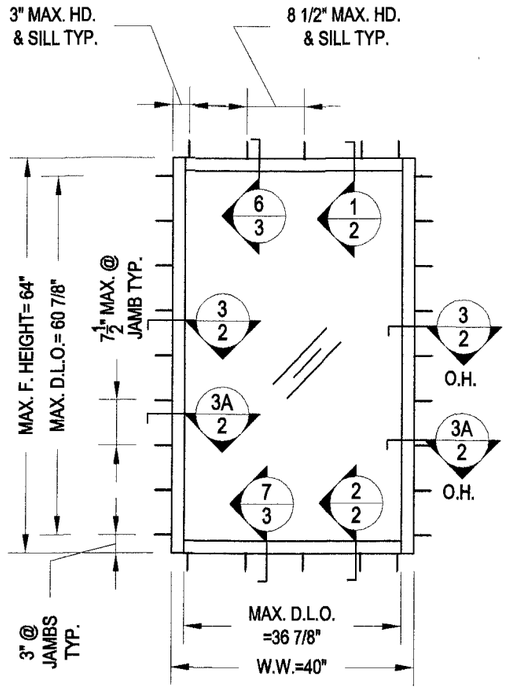

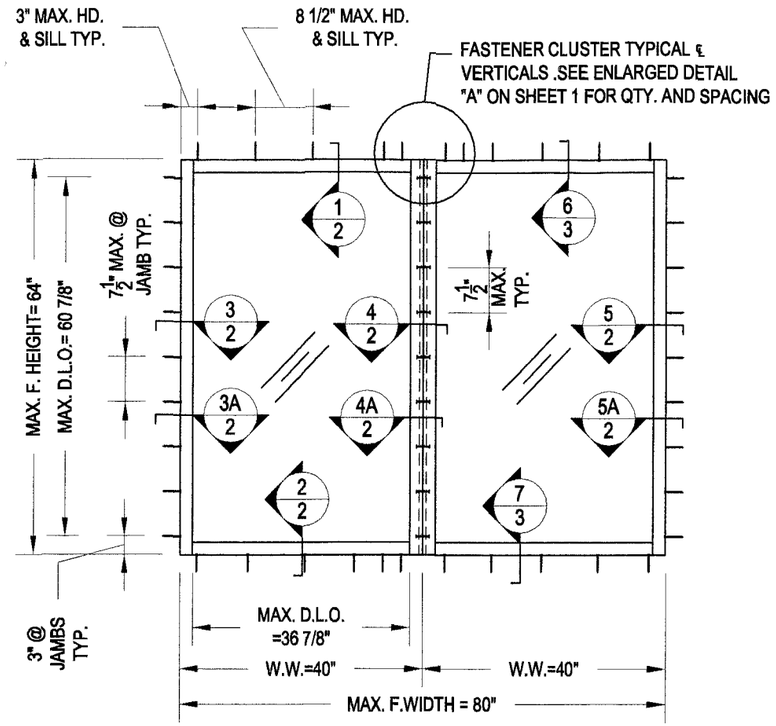

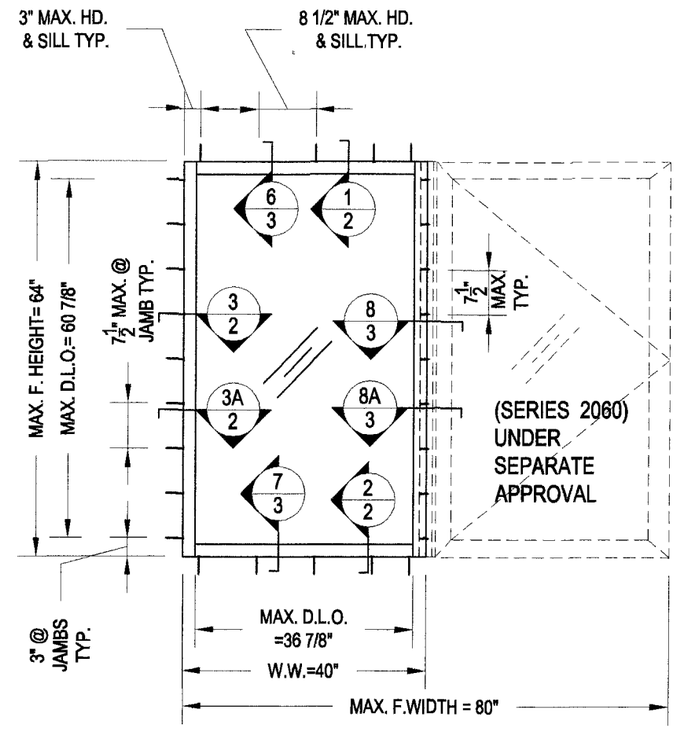

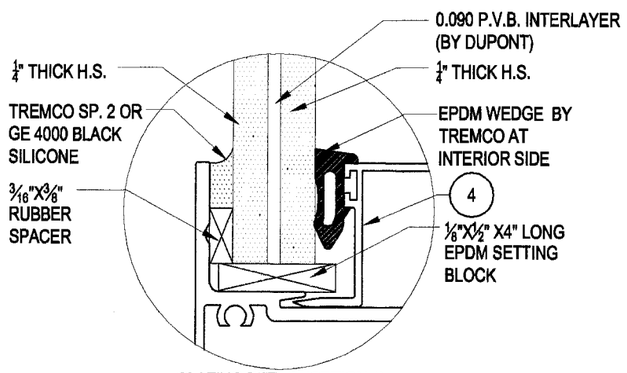

GLAZING DETAIL (OPTION 1)
(9/16" LAMINATED GLASS)

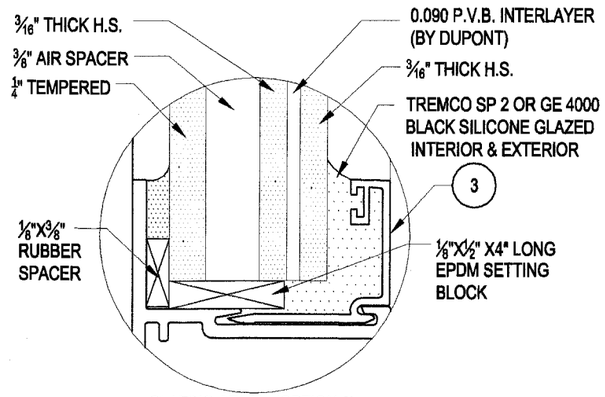

GLAZING DETAIL (OPTION 2)
(13/32" INSULATED LAMINATED GLASS)

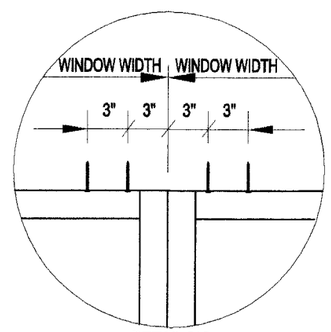

DETAIL "A".
CLUSTER OF 4 ANCHORS TYPICAL DETAIL AT INTERLOCKS (TOP AND BOTTOM)

GENERAL NOTES:

1. THIS PRODUCT HAS BEEN DESIGNED & TESTED IN ACCORDANCE WITH THE 2007 FLORIDA BUILDING CODE (HIGH VELOCITY HURRICANE ZONE)
2. FRAME HEAD AND SILL USE SAME FASTENER SPACING
3. FRAME JAMBS AND SILL USE SAME FASTENER SPACING
4. LARGE MISSILE IMPACT (LMI): UNIT TO BE INSTALLED UP TO 30 FT ABOVE THE GRADE.
5. SHUTTERS ARE NOT REQUIRED.
6. USE CLUSTER OF (4) FASTENERS @ SILL/HEAD WHERE VERTICAL MULLIONS OCURRS ONLY.
7. WOOD BUCKS NOT BY M.W.S. MUST SUSTAIN LOADS IMPOSED BY GLAZING SYSTEM & TRANSFER THEM TO THE BUILDING STRUCTURE.

DESIGN LOAD CAPACITY (P.S.F.)	
POSITIVE	NEGATIVE
130	130

Approved for compliance with the Florida Building Code
Date 08/21/08
NOAA 08-0611.11
Miami-Dade Product Control Division
By

Jorge E. Valdes
Fla. PE# 67398
7/7/08

Miami Wall Systems, Inc.
701 West 25th Street
Hialeah, Florida. 33010
Phone:(305) 888-2300 Fax:(305) 888-3058

FIXED WINDOW SERIES 2050

WINDOW ELEVATIONS
GENERAL NOTES

NO.	DATE	REVISION

DATE: 7/7/2008
SCALE: AS NOTED
DWG. BY: L.R.A.
CHK. BY: JV
DWG NO.: 2050-FW
SHEET 1 OF 4

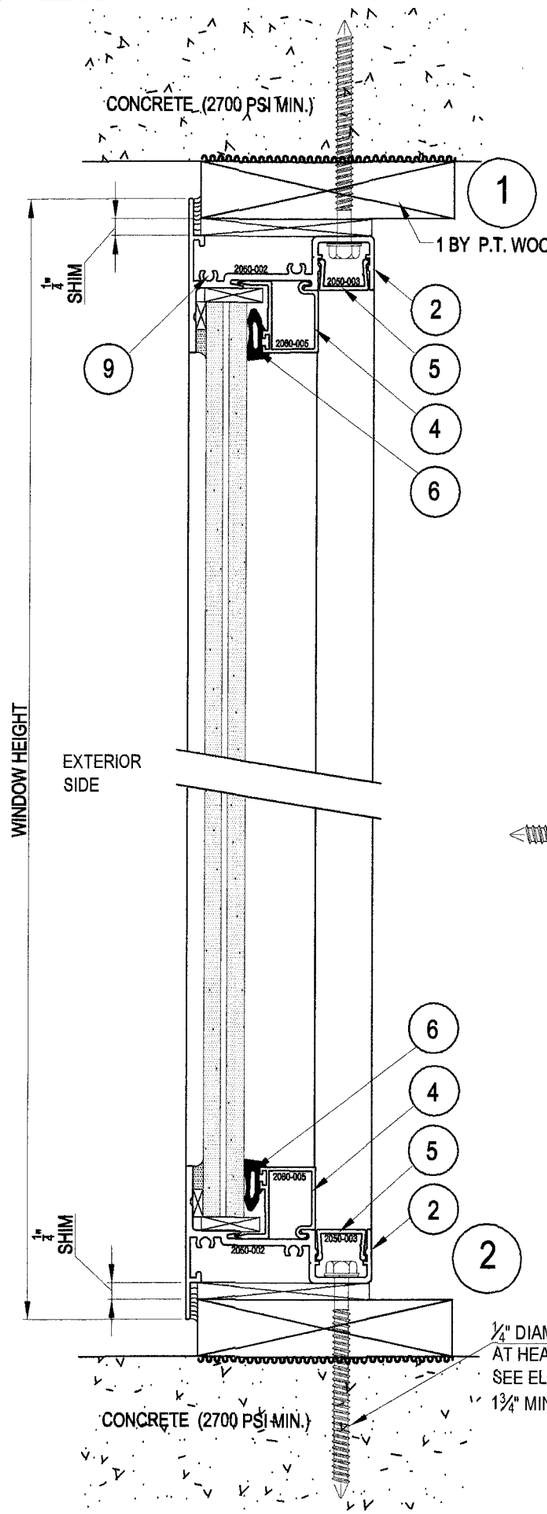

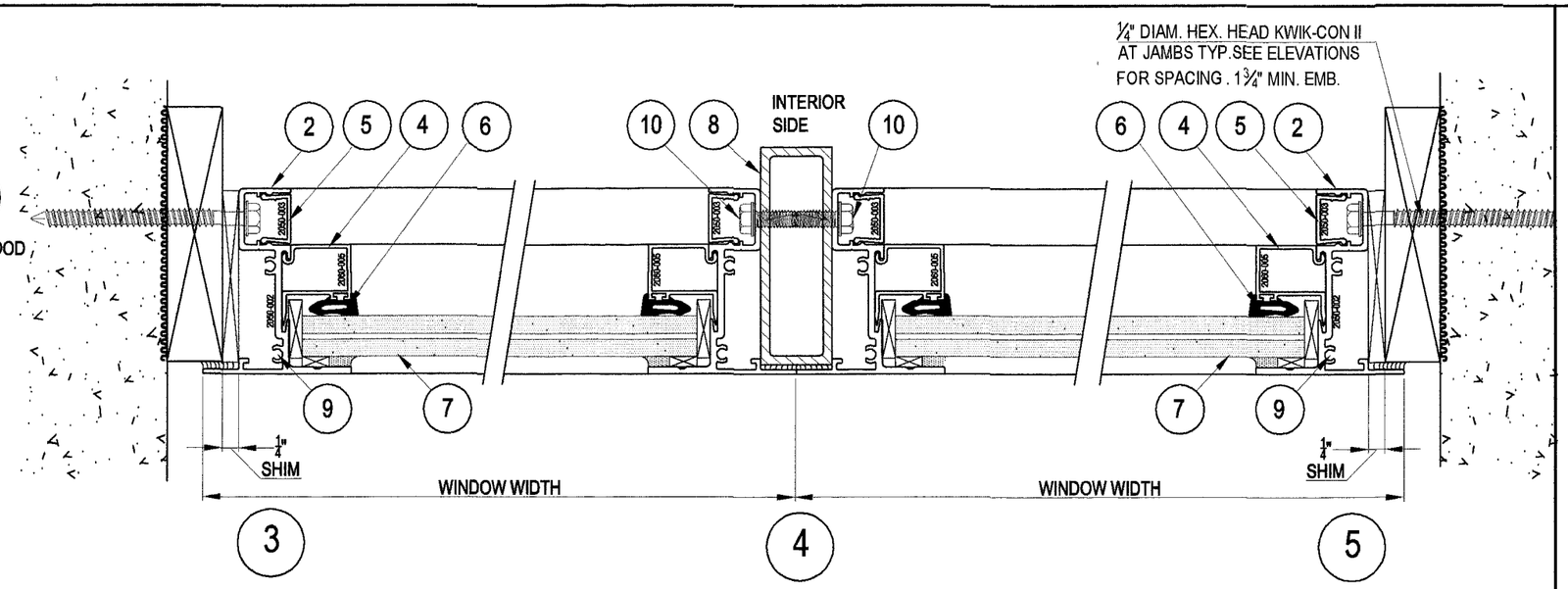

FIXED - FIXED WINDOWS UNEQUAL LEG CONDITION

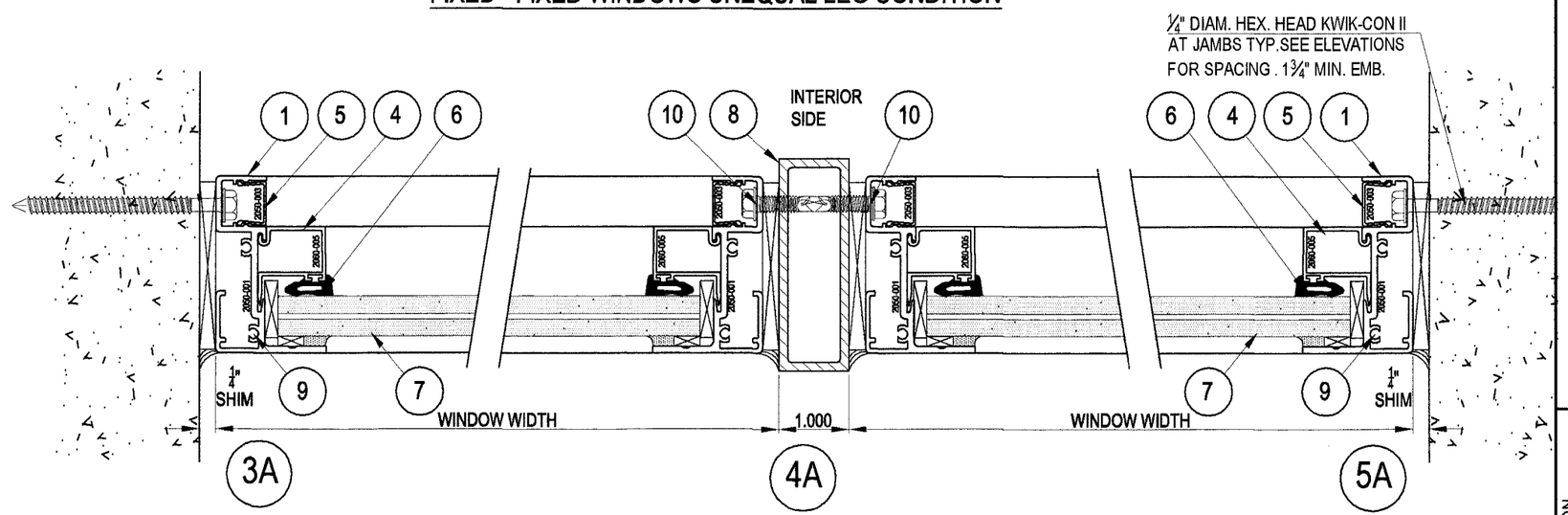

FIXED - FIXED WINDOWS EQUAL LEG CONDITION

Approved as complying with the Florida Building Code
Date 06/21/08
NOA# 08-06 11.11
Miami Dade Product Control Division
By

Jorge E. Valdes
Fla. PE# 67398
7/7/08

Miami Wall Systems, Inc.
701 West 25th Street
Hialeah, Florida. 33010
Phone:(305) 888-2300 Fax:(305) 888-3058

FIXED WINDOW SERIES 2050

SECTIONS

NO.	DATE	REVISION

DATE: 7/7/2008
SCALE: AS NOTED
DWG. BY: L.R.A.
CHK. BY: JV
DWG NO.: 2050-FW
SHEET 2 OF 4

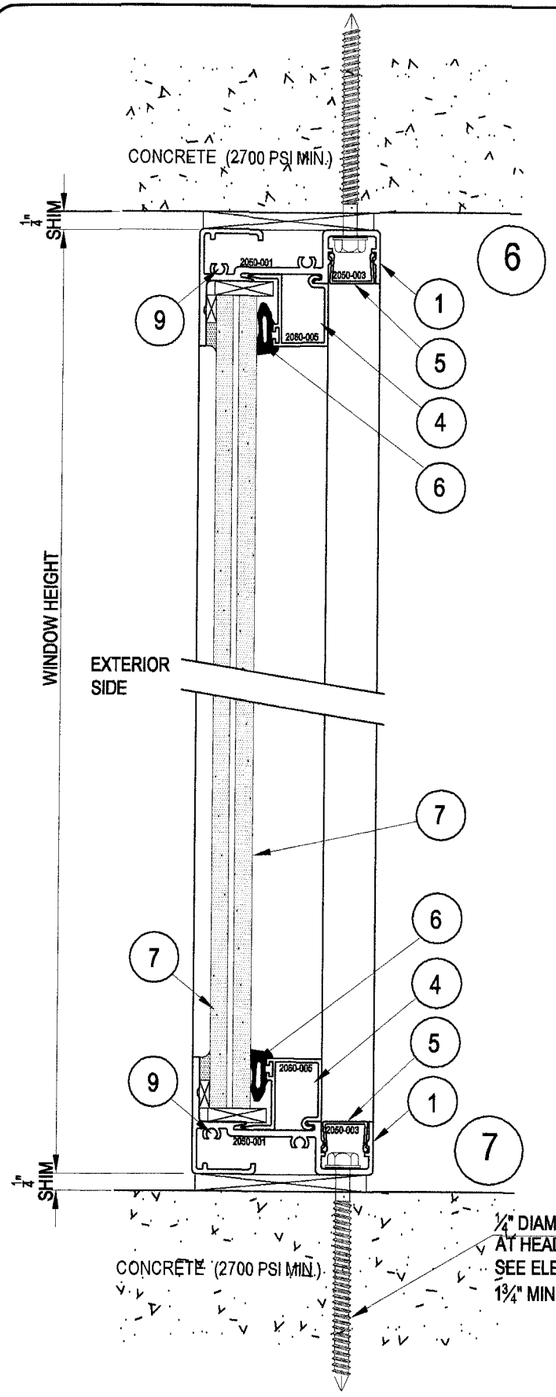

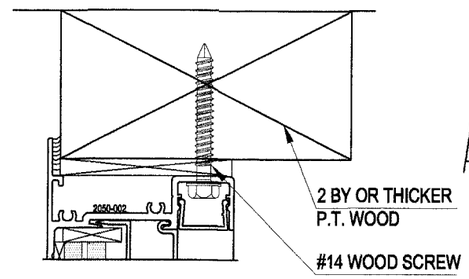

ANCHORAGE OPTION INTO WOOD

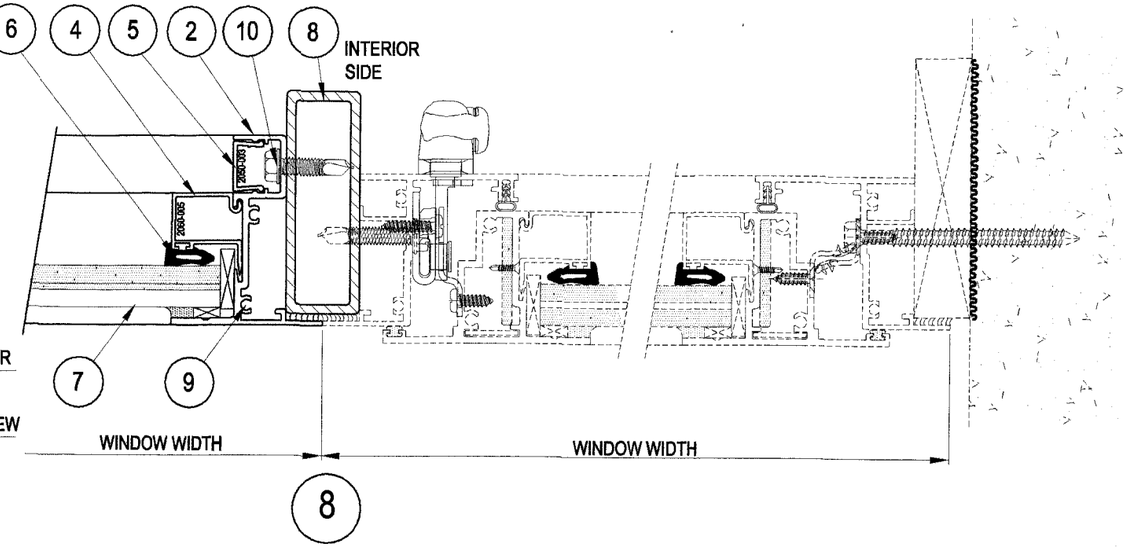

FIXED-CASEMENT WINDOWS UNEQUAL LEG CONDITION

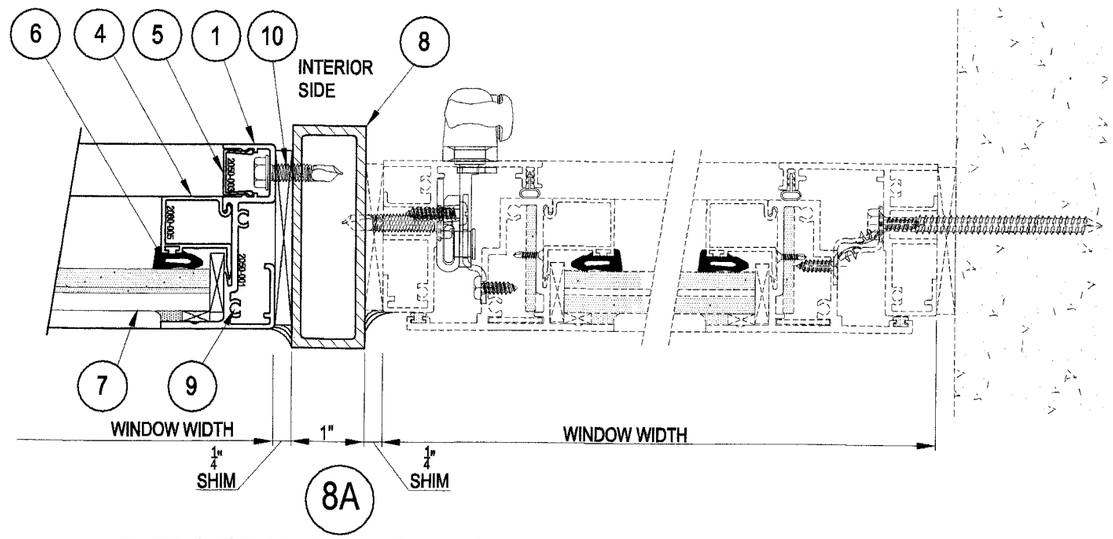

FIXED-CASEMENT WINDOWS EQUAL LEG CONDITION

Approved as complying with the Florida Building Code
Date 08/21/08
NOA# 08-0611.11
Miami Dade Product Control Division
By

Jorge E. Valdes
Fla. PE# 67398
7/7/08

Miami Wall Systems, Inc.
701 West 25th Street
Hialeah, Florida. 33010
Phone:(305) 888-2300 Fax:(305) 888-3058

FIXED WINDOW SERIES 2050

SECTIONS

NO.	DATE	REVISION

DATE: 7/7/2008
SCALE: AS NOTED
DWG. BY: L.R.A.
CHK. BY: JV
DWG NO.: 2050-FW
SHEET 3 OF 4

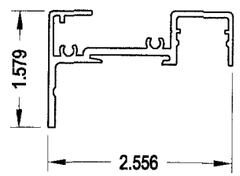

1 EQUAL LEG FRAME

MATERIAL: AL.6063-T6
TYP. WALL: .063

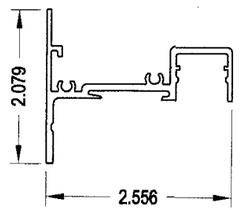

2 UNEQUAL LEG FRAME

MATERIAL: AL.6063-T6
TYP. WALL: .063

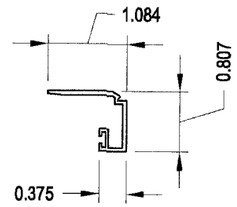

3 GLAZING BEAD

MATERIAL: AL.6063-T5
TYP. WALL: .050

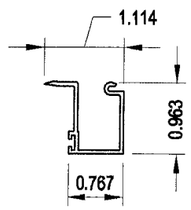

4 GLAZING BEAD

MATERIAL: AL.6063-T5
TYP. WALL: .050

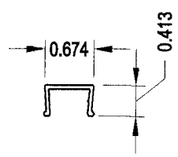

5 SNAP COVER

MATERIAL: AL. 6063-T5
TYP. WALL: .050

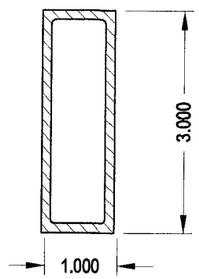

8 ALUMINUM TUBE

MATERIAL: AL.6063-T5
.125 THICK ALUMINUM

BILL OF MATERIALS

ITEM #	PART No.	REQ'D	PART NAME	REMARKS
1	2050-001	4 PER WINDOW	EQUAL LEG FRAME	AT SILL, HEAD & JAMBS
2	2050-002	4 PER WINDOW	UNEQUAL LEG FRAME	AT SILL, HEAD & JAMBS
3	2060-004	4 PER WINDOW	GLAZING BEAD	FOR 1 $\frac{3}{32}$" INSULATED LAMINATED GLASS
4	2060-005	4 PER WINDOW	GLAZING BEAD	FOR $\frac{9}{16}$" LAMINATED GLASS
5	2050-003	4 PER WINDOW	SNAP COVER	AT SILL, HEAD & JAMBS
6		AS REQUIRED	EPDM WEDGE	AT INTERIOR SIDE OF GLASS
7		1 PER FRAME	$\frac{9}{16}$" LAMINATED GLASS	
8		1 PER MULLION	1" X 3"X ⅛" THK. X 64" LONG ALUMINUM TUBE	MULLIONS
9		2 PER CORNER	#8X1½" PAN HEAD, S/S, S.M.S.	FRAME ASSEMBLY SCREWS
10		AS REQUIRED	¼" DIAM. HEX HEAD TEK SCREW	AT JAMB / MULLION CONNECTION. SEE ELEVATIONS & GENERAL NOTES FOR MAX. SPACING

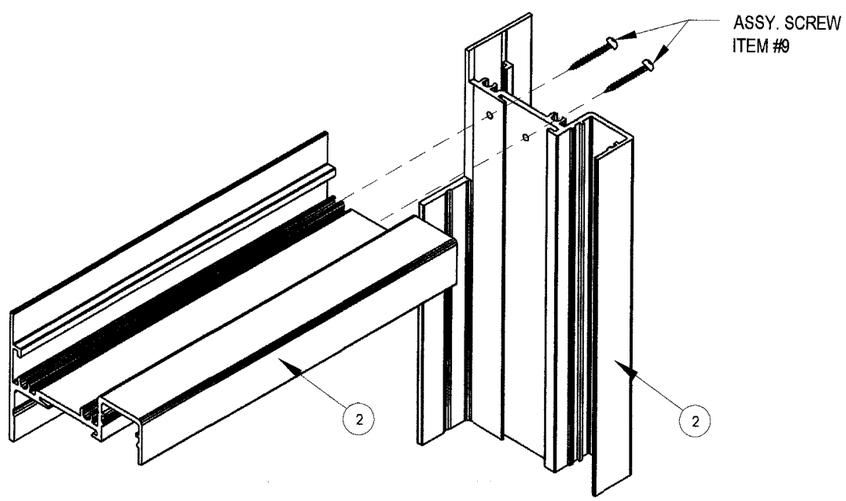

UNEQUAL LEG FRAME CORNER DETAIL

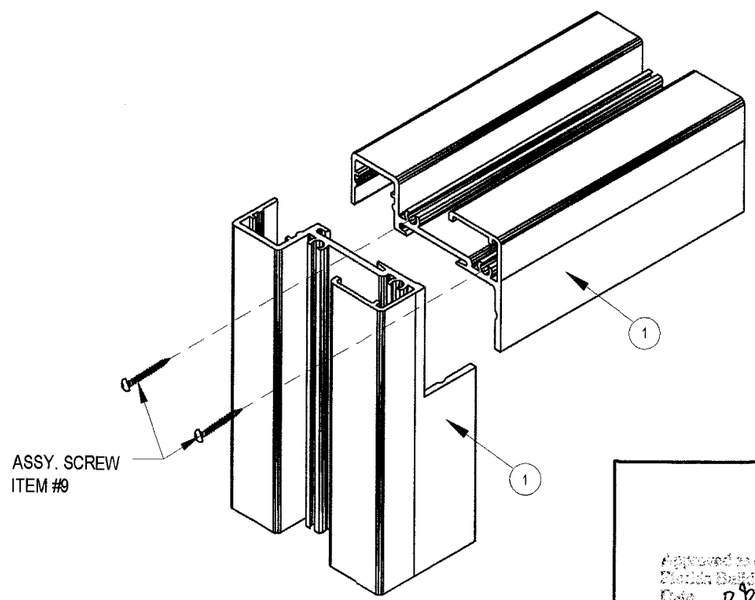

EQUAL LEG FRAME CORNER DETAIL

Approved as complying with the Dade Building Code
Date 08/21/08
NOA# 04-0611.11
Miami Dade Product Control Division
By

Jorge E. Vaides
Fla. PE# 67398
7/7/08

Miami Wall Systems, Inc.
701 West 25th Street
Hialeah, Florida. 33010
Phone:(305) 888-2300 Fax:(305) 888-3058

FIXED WINDOW SERIES 2050

EXTRUSION DETAILS, CORNER DETAILS & BILL OF MATERIALS

NO.	DATE	REVISION

DATE: 7/7/2008
SCALE: AS NOTED
DWG. BY: L.R.A.
CHK. BY: JV
DWG NO.: 2050-FW
SHEET 4 OF 4