MIAMI-DADE

BUILDING CODE COMPLIANCE OFFICE (BCCO)
PRODUCT CONTROL DIVISION

MIAMI-DADE COUNTY, FLORIDA
METRO-DADE FLAGLER BUILDING
140 WEST FLAGLER STREET, SUITE 1603
MIAMI, FLORIDA 33130-1563
(305) 375-2901 FAX (305) 375-2908

NOTICE OF ACCEPTANCE (NOA)

Artezanos, Inc.
9455 SW 78th Street
Miami, FL 33173

SCOPE:
This NOA is being issued under the applicable rules and regulations governing the use of construction materials. The documentation submitted has been reviewed by Miami-Dade County Product Control Division and accepted by the Board of Rules and Appeals (BORA) to be used in Miami Dade County and other areas where allowed by the Authority Having Jurisdiction (AHJ).

This NOA shall not be valid after the expiration date stated below. The Miami-Dade County Product Control Division (In Miami Dade County) and/or the AHJ (in areas other than Miami Dade County) reserve the right to have this product or material tested for quality assurance purposes. If this product or material fails to perform in the accepted manner, the manufacturer will incur the expense of such testing and the AHJ may immediately revoke, modify, or suspend the use of such product or material within their jurisdiction. BORA reserves the right to revoke this acceptance, if it is determined by Miami-Dade County Product Control Division that this product or material fails to meet the requirements of the applicable building code.

This product is approved as described herein, and has been designed to comply with the High Velocity Hurricane Zone of the Florida Building Code.

DESCRIPTION: Artezanos World Class

LABELING: Each unit shall bear a permanent label with the manufacturer's name or logo, city, state and following statement: "Miami-Dade County Product Control Approved", unless otherwise noted herein.

RENEWAL of this NOA shall be considered after a renewal application has been filed and there has been no change in the applicable building code negatively affecting the performance of this product.

TERMINATION of this NOA will occur after the expiration date or if there has been a revision or change in the materials, use, and/or manufacture of the product or process. Misuse of this NOA as an endorsement of any product, for sales, advertising or any other purposes shall automatically terminate this NOA. Failure to comply with any section of this NOA shall be cause for termination and removal of NOA.

ADVERTISEMENT: The NOA number preceded by the words Miami-Dade County, Florida, and followed by the expiration date may be displayed in advertising literature. If any portion of the NOA is displayed, then it shall be done in its entirety.

INSPECTION: A copy of this entire NOA shall be provided to the user by the manufacturer or its distributors and shall be available for inspection at the job site at the request of the Building Official.

This revises NOA # 06-0105.04 and consists of pages 1 through 11.
The submitted documentation was reviewed by Alex Tigera.

ROOFING ASSEMBLY APPROVAL

Category: Roofing
Sub Category: Roofing Tiles
Material: Clay

1. SCOPE

This approves a roofing system using "World Class Two Piece Handmade Tapered Mission Barrel Roofing Tile" Clay Roof Tile, as manufactured by Artezanos, Inc. described in Section 2 of this Notice of Acceptance. For the locations where the pressure requirements, as determined by applicable Building Code, does not exceed the values listed in section 4 herein. The attachment calculations shall be done as a moment based system.

2. PRODUCT DESCRIPTION

Manufactured by Applicant	Dimensions	Test Specifications	Product Description
2 Piece Handmade Tapered Mission Barrel Tile	l = 18" w = 8" ½" thick	ASTM C 1167	High profile, two piece, barrel, clay roof tile. For direct deck adhesive or mortar set applications.
Italian Pan Tile	l = 19.4" w = 10" ½" thick	ASTM C 1167	Flat pan clay tile to be used in conjuction with Handmade Tapered Mission Barrel Tile as the cap. For direct deck adhesive or mortar set applications.
Steel Pan	l = 21"- 84" w = 7.5" .0179" thick (26 ga.)	TAS 110	Kynar or Hylar coated steel pan tile to be used in conjuction with Handmade Tapered Mission Barrel Tile as the cap. For direct deck adhesive set applications.
Aluminum Pan	l = 21"-84" w = 7.5" .025" thick (22 ga.)	TAS 110	Aluminum pan tile (with optional coating of Kynar or Hylar) to be used in conjuction with Handmade Tapered Mission Barrel Tile as the cap. For direct deck adhesive set applications.
Trim Pieces	l = varies w = varies varying thickness	ASTM C 1167	Accessory trim, clay roof pieces for use at hips, rakes, ridges and valley terminations.

2.1. EVIDENCE SUBMITTED

Test Agency	Test Identifier	Test Name/Report	Date
Testwell Craig Laboratories & Consultants, Inc.	Lab #ABM-4	Static Uplift Testing PA 101 (Mortar Set)	Jan 1995
	Lab #ABM-20	Static Uplift Testing PA 101 (Adhesive Set)	Nov 1995
	Lab #ABM-1	Physical Properties ASTM C 1167	2003
IBA Consultants Inc.	2352-39	Physical Properties ASTM C 1167	Nov. 2005
	2352-47	Physical Properties ASTM C 1167	June 2006
	2352-38	Static Uplift Testing TAS 101 (Adhesive Set)	Dec. 2005
	2352-64	Static Uplift Testing TAS 101 (Mortar Set)	May 2008
	2352-53	Static Uplift Testing TAS 101 (Adhesive Set with Steel Pan)	April 2008
	2352-59	Static Uplift Testing TAS 101 (Adhesive Set with Aluminum Pan)	April 2008
Walker Engineering		Thermal Expansion of Steel, Concrete and Clay Components	
Southwest Research Institute	01.13537.01.310	ASTM E-108	April 2008

3. LIMITATIONS

3.1 Fire classification is not part of this acceptance.

3.2 For mortar or adhesive set tile applications, a static field uplift test in accordance with RAS 106 may required, refer to applicable building code.

3.3 Applicant shall retain the services of a Miami-Dade County Certified Laboratory to perform quarterly test in accordance with TAS 112, appendix 'A'. Such testing shall be submitted to the Building Code Compliance Office for review.

3.4 Minimum underlayments shall be in compliance with the applicable Roofing Applications Standards listed section 4.1, 4.3, 4.5 and 4.7 herein.

3.5 30/90 hot mopped underlayment applications may be installed perpendicular to the roof slope unless stated otherwise by the underlayment material manufacturers published literature.

3.6 This acceptance is for wood deck applications. Minimum deck requirements shall be in compliance with applicable building code.

3.7 When using Steel or Aluminum Pan tile, panels must be clean to ensure proper adhesion.

4. INSTALLATION

System A1 – Handmade Barrel Tile (Two-Piece Cap and Pan)

4.1. "World Class Two Piece Handmade Tapered Mission Roofing Tile" and its components shall be installed in strict compliance with Roofing Application Standard RAS 120.

4.2. Data for Attachment Calculations

Table 1: Average Weight (W) and Dimensions (l x w)			
Tile Profile	**Weight-W (lbf)**	**Length - l (feet)**	**Width - w (feet)**
Two Piece Handmade Tapered Mission Tile	5.8	1.42	0.58

Table 2: Aerodynamic Multipliers - λ (ft^3)	
Tile Profile	**λ (ft^3) Direct Deck Application**
Two Piece Handmade Tapered Mission Tile	0.22

Table 3: Restoring Moments due to Gravity - M_g (ft-lbf)						
Tile Profile	**2":12"**	**3":12"**	**4":12"**	**5":12"**	**6":12"**	**7":12"**
Two Piece Handmade Tapered Mission Tile	3.9	3.8	3.7	3.6	3.5	3.4

Table 4: Attachment Resistance Expressed as a Moment - M_f (ft-lbf) for Mortar or Adhesive Set Systems		
Tile Profile	**Tile Application**	**Attachment Resistance**
Two Piece Handmade Tapered Mission Tile	Adhesive Set	111.4[1]
1. Place 42 grams per pan and 21 grams per cap (on each side) of PolyPro™.		

Table 5: Attachment Resistance Expressed as a Moment - M_f (ft-lbf) for Mortar Set Systems		
Tile Profile	**Tile Application**	**Attachment Resistance**
Two Piece Handmade Tapered Mission Tile	Mortar Set	57.4[2]
2. Quickcrete Mortar		

System A2 – Handmade Barrel Tile with Italian Pan Tile

4.3. "World Class Two Piece Handmade Tapered Mission Roofing Tile" and its components shall be installed in strict compliance with Roofing Application Standard RAS 120.

4.4. Data for Attachment Calculations

Table 1: Average Weight (W) and Dimensions (l x w)			
Tile Profile	**Weight-W (lbf)**	**Length - l (feet)**	**Width - w (feet)**
Handmade Tapered Mission Tile with Italian Pan Tile	5.2	1.5	0.667

Table 2: Aerodynamic Multipliers - λ (ft^3)	
Tile Profile	**λ (ft^3) Direct Deck Application**
Handmade Tapered Mission Tile with Italian Pan Tile	0.22

Table 3: Restoring Moments due to Gravity - M_g (ft-lbf)						
Tile Profile	**2":12"**	**3":12"**	**4":12"**	**5":12"**	**6":12"**	**7":12"**
Handmade Tapered Mission Tile with Italian Pan Tile	4.85	4.77	4.66	4.51	4.30	4.05

Table 4: Attachment Resistance Expressed as a Moment - M_f (ft-lbf) for Mortar or Adhesive Set Systems		
Tile Profile	**Tile Application**	**Attachment Resistance**
Handmade Tapered Mission Tile with Italian Pan Tile	Adhesive Set	63.4[3]
3. Place 19.3 grams per pan and 10 grams per cap (on each side) of PolyPro™.		

Table 5: Attachment Resistance Expressed as a Moment - M_f (ft-lbf) for Mortar Set Systems		
Tile Profile	**Tile Application**	**Attachment Resistance**
Handmade Tapered Mission Tile with Italian Pan Tile	Mortar Set	77.64[4]
4. Quickcrete Mortar		

System A3 – Handmade Barrel Tile with Steel Pan Tile

4.5. "World Class Two Piece Handmade Tapered Mission Roofing Tile" and its components shall be installed in strict compliance with Roofing Application Standard RAS 120. **(See Detail B)**

4.6. Data for Attachment Calculations

Table 1: Average Weight (W) and Dimensions (l x w)			
Tile Profile	**Weight-W (lbf)**	**Length - l (feet)**	**Width - w (feet)**
Handmade Tapered Mission Tile/Steel Pan	5.2	1.5	0.667

Table 2: Aerodynamic Multipliers - λ (ft^3)	
Tile Profile	**λ (ft^3) Direct Deck Application**
Handmade Tapered Mission Tile/Steel Pan	0.22

Table 3: Restoring Moments due to Gravity - M_g (ft-lbf)						
Tile Profile	**2":12"**	**3":12"**	**4":12"**	**5":12"**	**6":12"**	**7":12"**
Handmade Tapered Mission Tile/Steel Pan	5.13	5.05	4.93	4.77	4.56	4.29

Table 4: Attachment Resistance Expressed as a Moment - M_f (ft-lbf) for Mortar or Adhesive Set Systems		
Tile Profile	**Tile Application**	**Attachment Resistance**
Handmade Tapered Mission Tile/Steel Pan	Adhesive Set	39.57[5]
5. Place 9.3 grams **per step** of pan and 5 grams on each side of cap of PolyPro™.		

System A4 – Handmade Barrel Tile with Aluminum Pan Tile

4.7. "World Class Two Piece Handmade Tapered Mission Roofing Tile" and its components shall be installed in strict compliance with Roofing Application Standard RAS 120. **(See Detail C)**

4.8. Data for Attachment Calculations

Table 1: Average Weight (W) and Dimensions (l x w)			
Tile Profile	**Weight-W (lbf)**	**Length - l (feet)**	**Width - w (feet)**
Handmade Tapered Mission Tile/Aluminum Pan	5.2	1.5	0.667

Table 2: Aerodynamic Multipliers - λ (ft^3)	
Tile Profile	**λ (ft^3) Direct Deck Application**
Handmade Tapered Mission Tile/Aluminum Pan	0.22

Table 3: Restoring Moments due to Gravity - M_g (ft-lbf)						
Tile Profile	**2":12"**	**3":12"**	**4":12"**	**5":12"**	**6":12"**	**7":12"**
Handmade Tapered Mission Tile/Aluminum Pan	5.08	5.01	4.89	4.74	4.54	4.28

Table 4: Attachment Resistance Expressed as a Moment - M_f (ft-lbf) for Mortar or Adhesive Set Systems		
Tile Profile	**Tile Application**	**Attachment Resistance**
Handmade Tapered Mission Tile/Aluminum Pan	Adhesive Set	190.84[6]
6. Place 31.9 grams **per step** of pan and 17.5 grams for each side of the cap of PolyPro™.		

5. LABELING

All tiles shall bear the imprint or identifiable marking of the manufacturer's name or logo **(See Detail Below)**, or following statement: "Miami-Dade County Product Control Approved".

ARTEZANOS WORLD CLASS TILE LABEL
(LOCATED ON EITHER TOPSIDE OR UNDERSIDE OF TILE)

6. BUILDING PERMIT REQUIREMENTS

6.1 Application for building permit shall be accompanied by copies of the following:

6.1.1 This Notice of Acceptance.

6.1.2 Any other documents as required by the Building Official in order to properly evaluate the installation of this system.

PROFILE DRAWING

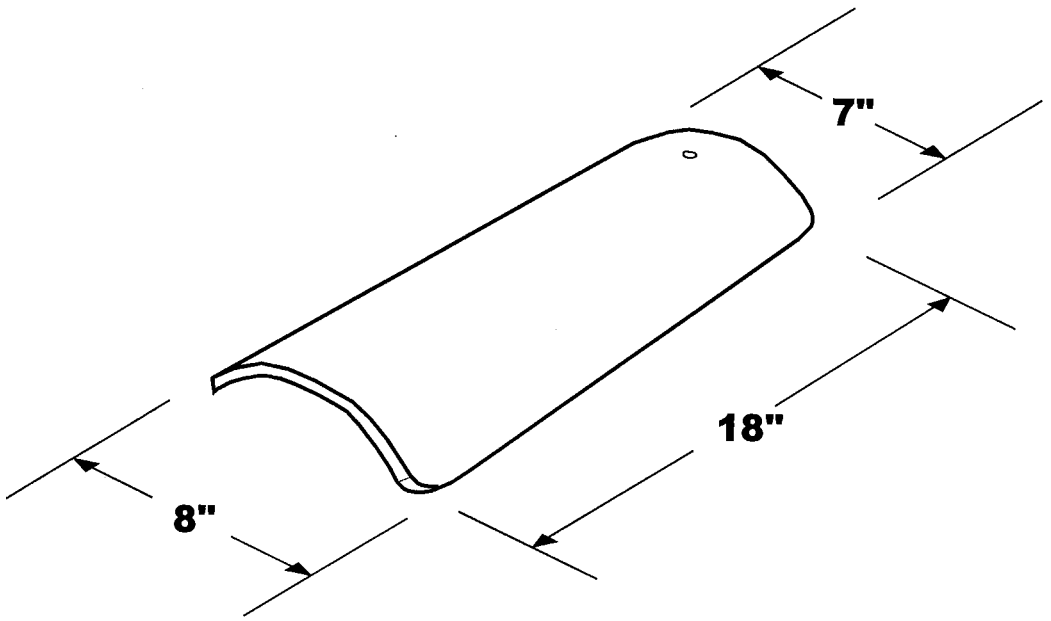

ARTEZANOS, INC. " 2 PIECE HANDMADE TAPERED MISSION BARREL TILE
DETAIL A

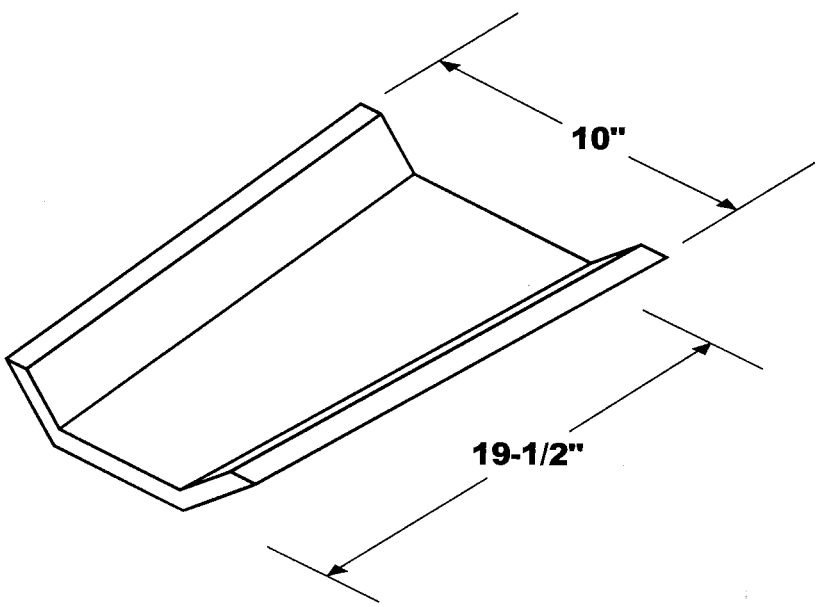

ARTEZANOS, INC. ITALIAN PAN TILE

DETAIL B

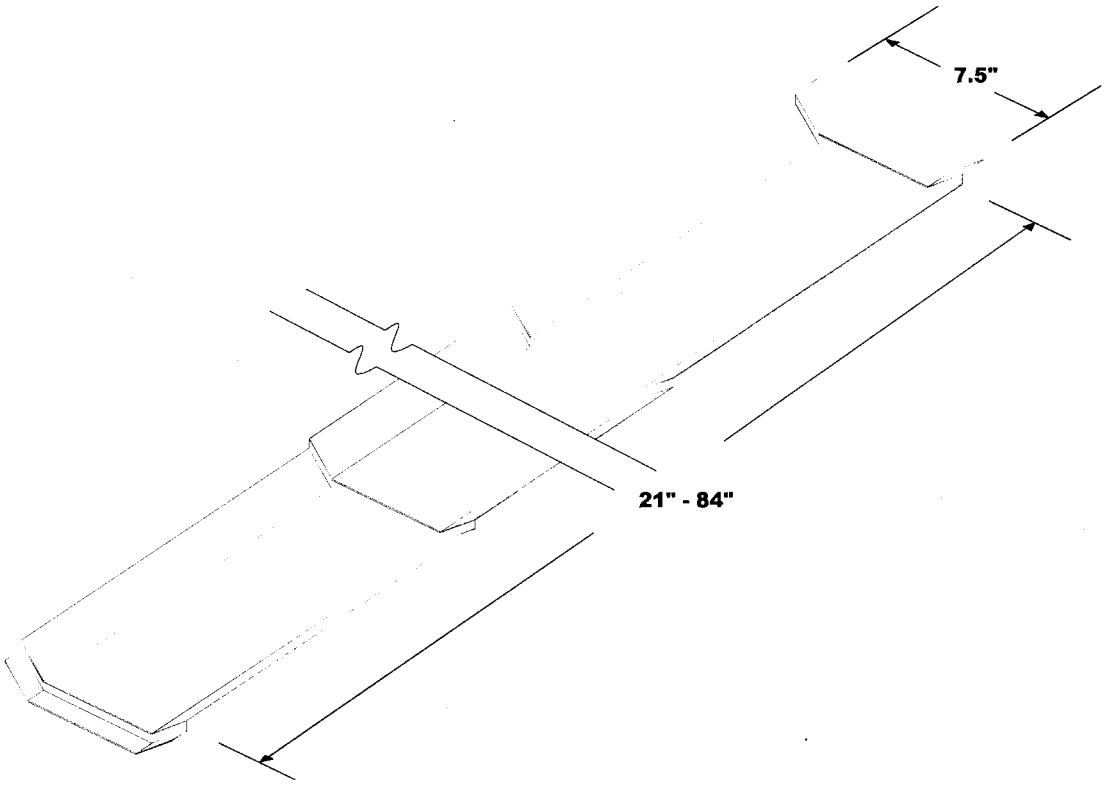

ARTEZANOS, INC. STEEL PAN TILE

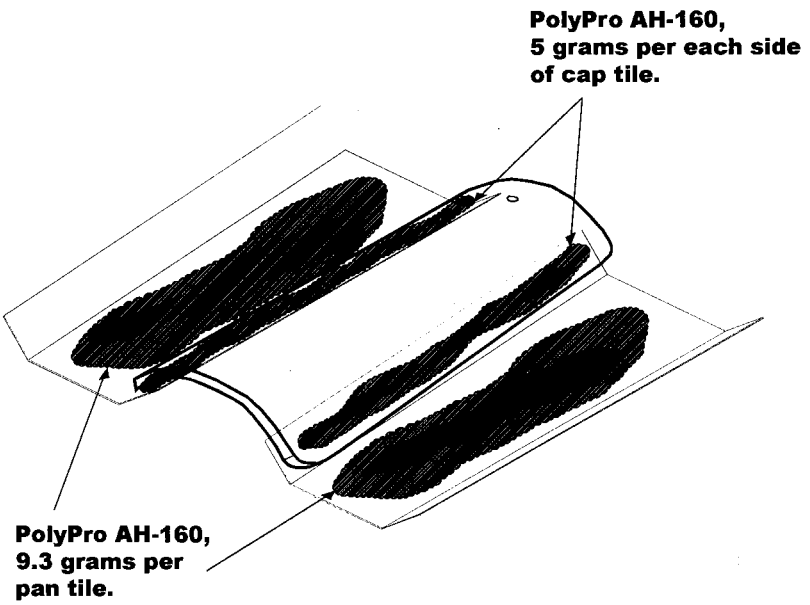

DETAIL C

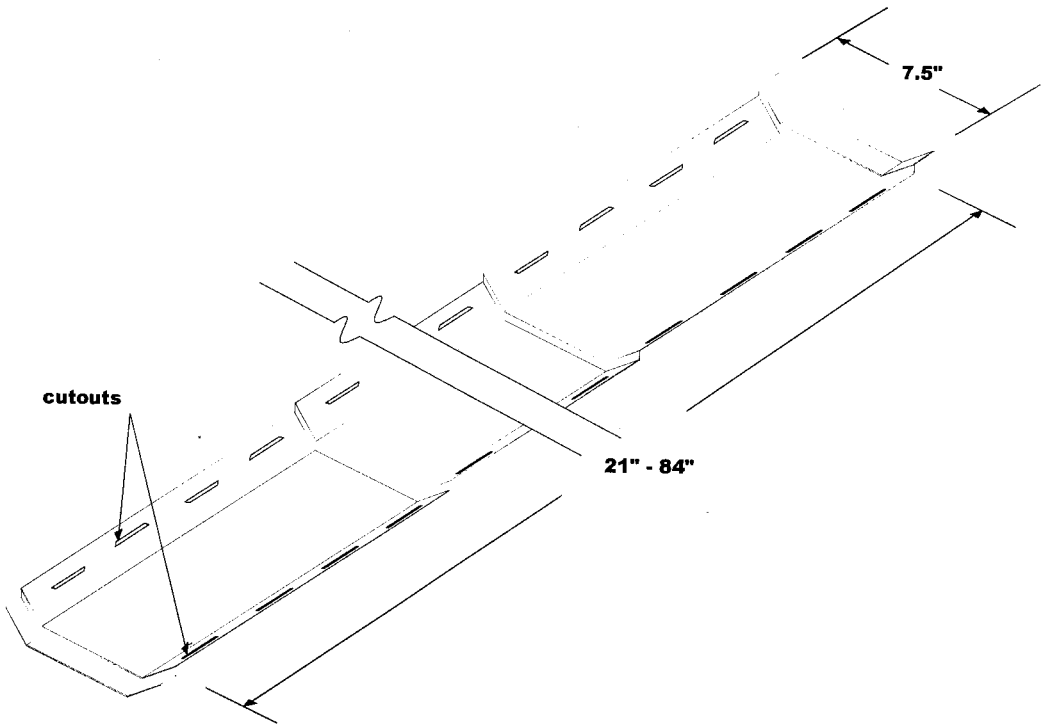

ARTEZANOS, INC. ALUMINUM PAN TILE

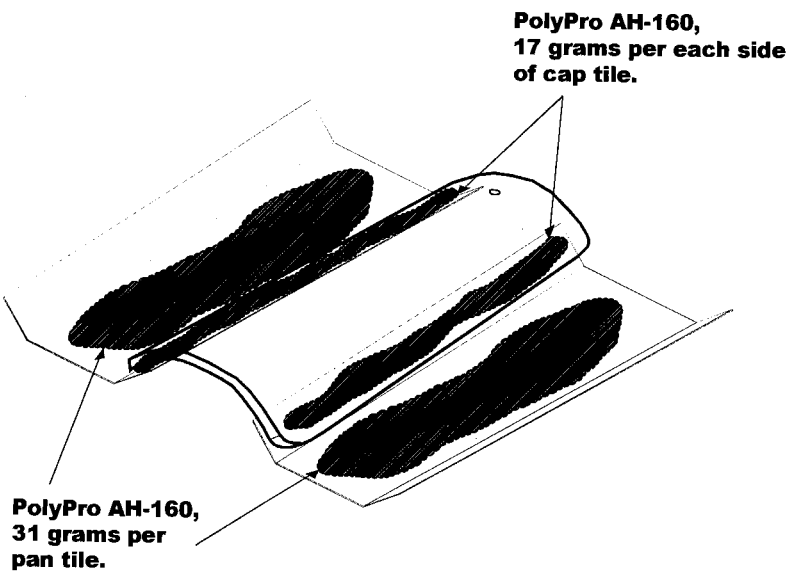

END OF THIS ACCEPTANCE