MIAMI-DADE COUNTY
BUILDING CODE COMPLIANCE OFFICE (BCCO)
PRODUCT CONTROL DIVISION

MIAMI-DADE COUNTY, FLORIDA
METRO-DADE FLAGLER BUILDING
140 WEST FLAGLER STREET, SUITE 1603
MIAMI, FLORIDA 33130-1563
(305) 375-2901 FAX (305) 375-2908
www.buildingcodeonline.com

NOTICE OF ACCEPTANCE (NOA)

PGT Industries
1070 Technology Drive,
Nokomis, Fl. 34275

SCOPE:

This NOA is being issued under the applicable rules and regulations governing the use of construction materials. The documentation submitted has been reviewed by Miami-Dade County Product Control Division and accepted by the Board of Rules and Appeals (BORA) to be used in Miami Dade County and other areas where allowed by the Authority Having Jurisdiction (AHJ).

This NOA shall not be valid after the expiration date stated below. The Miami-Dade County Product Control Division (In Miami Dade County) and/or the AHJ (in areas other than Miami Dade County) reserve the right to have this product or material tested for quality assurance purposes. If this product or material fails to perform in the accepted manner, the manufacturer will incur the expense of such testing and the AHJ may immediately revoke, modify, or suspend the use of such product or material within their jurisdiction. BORA reserves the right to revoke this acceptance, if it is determined by Miami-Dade County Product Control Division that this product or material fails to meet the requirements of the applicable building code.

This product is approved as described herein, and has been designed to comply with the Florida Building Code, including High Velocity Hurricane Zone of the Florida Building Code.

DESCRIPTION: Series "WS-3500" Aluminum Window Wall system -LMI

APPROVAL DOCUMENT: Drawing N0. **W08-58,** titled "Series WS-3500 Alum Window Wall Storefront Sys", sheets 1 through 11 of 11, prepared by Al Farooq Corporation, dated 06-05-08 and last revised on June 09, 2008, signed and sealed by Dr. Humayoun Farooq, P.E., bearing the Miami-Dade County Product Control revision stamp with the Notice of Acceptance number and expiration date by the Miami-Dade County Product Control Division.

MISSILE IMPACT RATING: Large Missile Impact Resistant

Limitation:

1. Lower capacity of mullion or door mullion may control.
2. Min one anchors must be installed at sidelite sill/header.
3. PGT's single & double doors may be installed with this system. Door height must not exceed 108".

LABELING: Each unit shall bear a permanent label with the manufacturer's name or logo, city, state and following statement: "Miami-Dade County Product Control Approved", unless otherwise noted herein.

RENEWAL of this NOA shall be considered after a renewal application has been filed and there has been no change in the applicable building code negatively affecting the performance of this product.

TERMINATION of this NOA will occur after the expiration date or if there has been a revision or change in the materials, use, and/or manufacture of the product or process. Misuse of this NOA as an endorsement of any product, for sales, advertising or any other purposes shall automatically terminate this NOA. Failure to comply with any section of this NOA shall be cause for termination and removal of NOA.

ADVERTISEMENT: The NOA number preceded by the words Miami-Dade County, Florida, and followed by the expiration date may be displayed in advertising literature. If any portion of the NOA is displayed, then it shall be done in its entirety.

INSPECTION: A copy of this entire NOA shall be provided to the user by the manufacturer or its distributors and shall be available for inspection at the job site at the request of the Building Official.

This NOA **revises** NOA # **07-0718.07** consists of this page 1 and evidence sheet E-1 as well as approval document mentioned above.

The submitted documentation was reviewed by **Ishaq I. Chanda, P.E.**

MIAMI-DADE COUNTY APPROVED

NOA No 08-0620.04
Expiration Date: May 20, 2009
Approval Date: August 14, 2008

10/7/18

PGT Industries

NOTICE OF ACCEPTANCE: EVIDENCE SUBMITTED

A. DRAWINGS (transferred from file # **07-0718.07**)

1. Manufacturer's die drawings and sections.
2. Drawing N0. **W08-58,** titled "Series WS-3500 Alum Window Wall Storefront Sys", sheets 1 through 11 of 11, prepared by Al Farooq Corporation, dated 06-05-08 and last revised on June 09, 2008, signed and sealed by Dr. Humayoun Farooq, P. E.

B. TESTS (transferred from file # **07-0718.07**)

1. Test reports on
   1) Air Infiltration Test, per FBC, TAS 202-94
   2) Water Infiltration resistant Test (Not Performed)
   3) Uniform Static Air Pressure Test, Loading per FBC TAS 202-94
   4) Large Missile Impact Test per FBC, TAS 201-94
   5) Cyclic Wind Pressure Loading per FBC, TAS 203-94

Along with marked-up drawings and installation diagram of aluminum single hung fixed window, prepared by Fenestration Testing Laboratory, Inc., Test Report No. **FTL-4042**, dated 01/26/04 and **FTL-4115**, dated 03/03/2004, both signed & sealed by Edmundo Largaespada, P. E.

2. Additional reference test reports:

2.1 Test Report No(s) **FTL-4254**, **FTL-4306** and **FTL-4320** per TAS 202, 201/203-9, issued by Fenestration testing Laboratories Inc.

C. CALCULATIONS

1. Anchor verification, comparative and structural analysis, prepared by AL- Farooq Corporation, dated 06/09/08, signed and sealed by Dr. Humayoun Farooq, P.E.
2. Glazing complies w/ ASTME-1300-02

D. QUALITY ASSURANCE

1. Miami Dade /Building Code Compliance Office (BCCO).

E. MATERIAL CERTIFICATIONS

1. Notice of Acceptance No. **03-0415.13** issued to Solutia, Inc. for "Vanceva Composites", expiring on 12/11/08.
2. Notice of Acceptance No. **06-1205.10** issued to DuPont DeNemours for "Sentry Glass Plus", expiring on 12/11/08.

F. STATEMENTS

1. Statement letter of code compliance and "No financial interest", dated 06-05-08 signed and sealed by Dr. Humayoun Farooq, P.E.
2. Statement letter of Lab compliance, as a part of above referenced test reports

G. OTHER

1. This NOA **revises** NOA # **07-0718.07** (04-0331.02), expires on 05-20-2009.
2. Test proposals # 02-0472 & # 06-0182, issued by BCCO.

Ishaq I. Chanda

Ishaq I. Chanda, P. E.
Product Control Examiner
NOA No 08-0620.04
Expiration Date: May 20, 2009
Approval Date: August 14, 2008

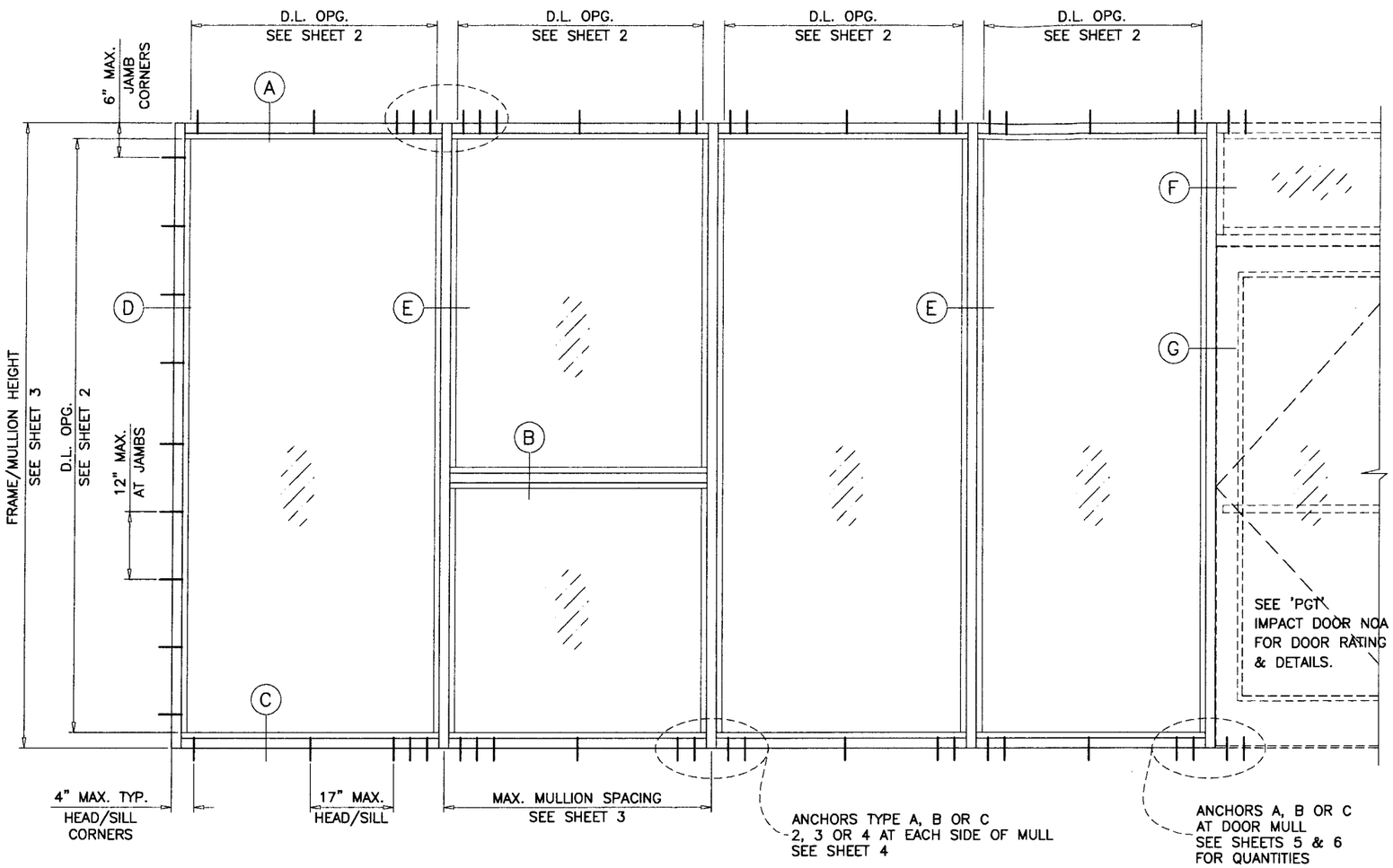

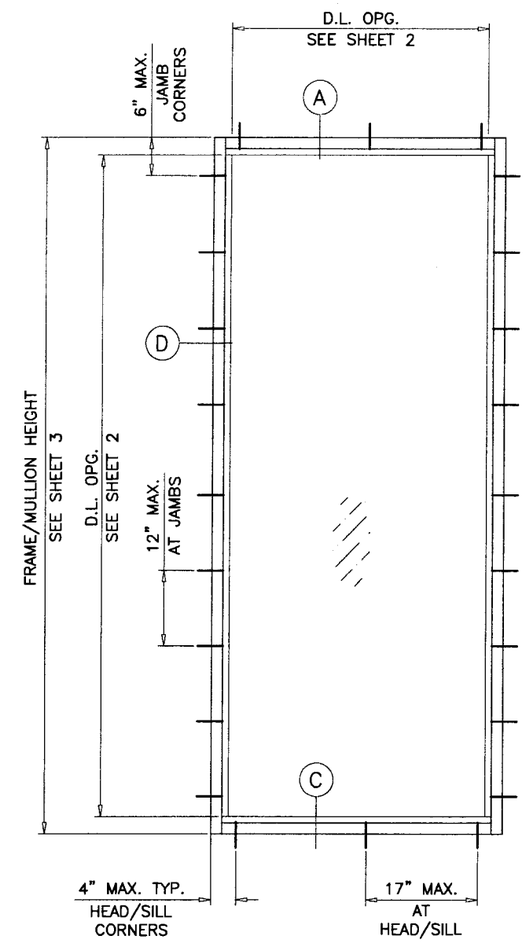

TYPICAL ELEVATIONS

WS-3500 ALUMINUM WINDOW WALL STOREFRONT SYSTEM

THIS SYSTEM MAY BE USED IN CONJUNCTION WITH MIAMI-DADE COUNTY APPR'D LARGE MISSILE IMPACT RESISTANT DOORS. LOWER DESIGN PRESSURE FROM STOREFRONT OR DOOR APPROVAL WILL APPLY TO ENTIRE SYSTEM.

CODE REQUIREMENTS FOR SAFEGUARDS MUST BE OBSERVED.

THIS PRODUCT HAS BEEN DESIGNED AND TESTED TO COMPLY WITH THE REQUIREMENTS OF THE FLORIDA BUILDING CODE 2004/2007 EDITION INCLUDING HIGH VELOCITY HURRICANE ZONE (HVHZ).

WOOD BUCKS BY OTHERS, MUST BE ANCHORED PROPERLY TO TRANSFER LOADS TO THE STRUCTURE.

ANCHORS SHALL BE AS LISTED, SPACED AS SHOWN ON DETAILS, ANCHORS EMBEDMENT TO BASE MATERIAL SHALL BE BEYOND WALL DRESSING OR STUCCO.

ANCHORING OR LOADING CONDITIONS NOT SHOWN IN THESE DETAILS ARE NOT PART OF THIS APPROVAL.

A LOAD DURATION INCREASE IN ALLOWABLE STRESS IS USED IN DESIGN OF ANCHORS INTO WOOD ONLY.

MATERIALS INCLUDING BUT NOT LIMITED TO STEEL/METAL SCREWS, THAT COME INTO CONTACT WITH OTHER DISSIMILAR MATERIALS SHALL MEET THE REQUIREMENTS OF 2004/2007 FLORIDA BLDG. CODE SECTION 2003.8.4.

THIS SYSTEM IS RATED FOR LARGE MISSILE IMPACT. SHUTTERS ARE NOT REQUIRED.

INSTRUCTIONS:

USE CHARTS AS FOLLOWS.

STEP 1 DETERMINE DESIGN WIND LOAD REQUIREMENT BASED ON WIND VELOCITY, BLDG. HEIGHT, WIND ZONE USING APPLICABLE ASCE 7 STANDARD.

STEP 2 SEE CHARTS ON SHEET 2 FOR DESIGN LOAD CAPACITY OF DESIRED GLASS SIZE.

STEP 3 CHECK MULLION CAPACITY FOR A GIVEN SPACING AND HEIGHT USING CHARTS ON SHEET 3 FOR STOREFRONT MULLION AND SHEETS 5 & 6 FOR DOOR MULLION. THE CAPACITY SHOULD EXCEED THE DESIGN LOAD.

STEP 4 USING CHARTS ON SHEET 4 FOR STOREFRONT MULLION AND CHARTS ON SHEETS 5 & 6 FOR DOOR MULLION SELECT ANCHOR OPTION WITH DESIGN RATING MORE THAN DESIGN LOAD SPECIFIED IN STEP 1 ABOVE.

STEP 5 THE LOWEST VALUE RESULTING FROM STEPS 2, 3 AND 4 SHALL APPLY TO ENTIRE SYSTEM.

PRODUCT REVISED
as complying with the Florida Building Code
Acceptance No 08-0620.04
Expiration Date MAY 30, 2009
By Shaes I. Clarke
Miami Dade Product Control Division

LAMINATED GLASS
LARGE MISSILE IMPACT

Engr: DR. HUMAYOUN FAROOQ
STRUCTURES
FLA. PE # 16557
C.A.N. 3538

JUN 09 2008

AL-FAROOQ CORPORATION
ENGINEERS & PRODUCT DEVELOPMENT
1235 S.W. 87 AVE
MIAMI, FLORIDA 33174
TEL. (305) 264-8100 FAX. (305) 262-6978

STORE\08-58PGT

WS-3500 ALUM WINDOW WALL STOREFRONT SYS.

PGT Industries
1070 TECHNOLOGY DRIVE
NORTH VENICE, FL. 34275
1-800-284-6019
Visibly Better

revisions:			
no	date	by	description

date: 06-05-08
scale: 1/2"=1'-0"
dr. by: HAMID
chk. by:

drawing no.
W08-58

GLASS LOAD CAPACITY – PSF		
NOMINAL DIMS.		GLASS TYPES 'A' & 'B'
D.L.O. WIDTH	D.L.O. HEIGHT	EXT.(+)/INT.(–)
28"	60"	130.0
32"		130.0
36"		130.0
40"		130.0
44"		130.0
48"		130.0
52"		130.0
56"		130.0
60"		130.0
28"	66"	130.0
32"		130.0
36"		130.0
40"		130.0
44"		130.0
48"		130.0
52"		130.0
56"		130.0
60"		130.0
28"	72"	130.0
32"		130.0
36"		130.0
40"		130.0
44"		130.0
48"		130.0
52"		130.0
56"		130.0
60"		130.0
28"	78"	130.0
32"		130.0
36"		130.0
40"		130.0
44"		130.0
48"		130.0
52"		130.0
56"		130.0
60"		130.0
28"	84"	130.0
32"		130.0
36"		130.0
40"		130.0
44"		130.0
48"		130.0
52"		130.0
56"		130.0
60"		130.0
28"	90"	130.0
32"		130.0
36"		130.0
40"		130.0
44"		130.0
48"		130.0
52"		130.0
56"		130.0

GLASS LOAD CAPACITY – PSF		
NOMINAL DIMS.		GLASS TYPES 'A' & 'B'
D.L.O. WIDTH	D.L.O. HEIGHT	EXT.(+)/INT.(–)
28"	96"	130.0
32"		130.0
36"		130.0
40"		130.0
44"		130.0
48"		130.0
52"		127.8
28"	102"	130.0
32"		130.0
36"		130.0
40"		130.0
44"		130.0
48"		129.4
28"	108"	130.0
32"		130.0
36"		130.0
40"		130.0
44"		130.0
28"	114"	130.0
32"		130.0
36"		130.0
40"		130.0
44–1/4"	114–1/2"	130.0

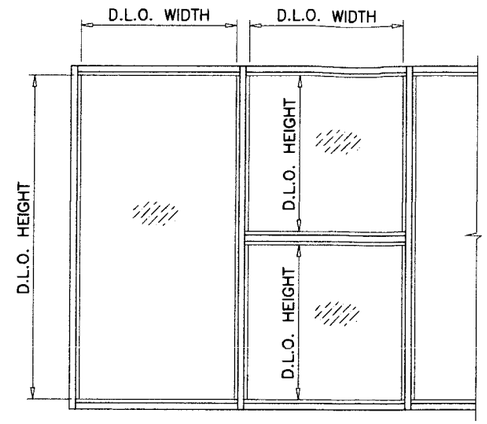

PRODUCT REVISED
as complying with the Florida Building Code
Acceptance No. OE-0C2004
Expiration Date MAY 20, 2009
By Ishaq I. Khan
Miami Dade Product Control Division

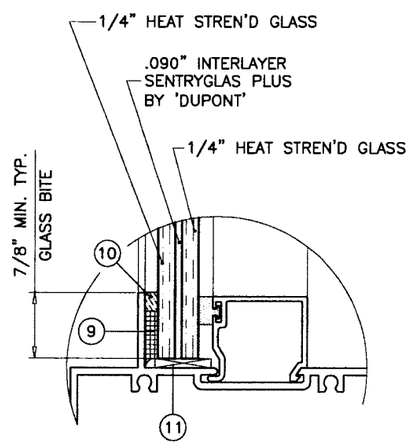

GLASS TYPE 'A'

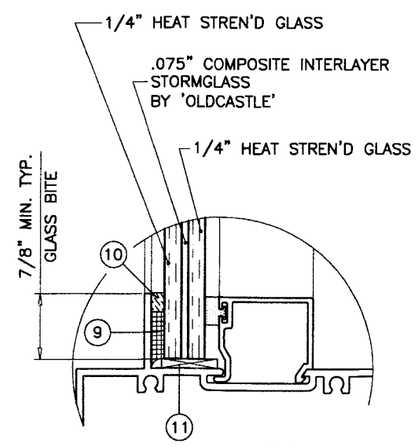

GLASS TYPE 'B'

GLAZING OPTIONS

NOTE:
GLASS CAPACITIES ON THIS SHEET ARE BASED ON ASTM E1300–02/04 (3 SEC. GUSTS).

Engr: DR. HUMAYOUN FAROOQ
STRUCTURES
FLA. PE # 16557
C.A.N. 3538

JUN 09 2008

AL-FAROOQ CORPORATION
ENGINEERS & PRODUCT DEVELOPMENT
1235 S.W. 87 AVE
MIAMI, FLORIDA 33174
TEL. (305) 264-8100 FAX. (305) 262-6978

STORE\08–58PGT

WS–3500 ALUM WINDOW WALL STOREFRONT SYS.

PGT Industries
1070 TECHNOLOGY DRIVE
NORTH VENICE, FL. 34275
1-800-284-6019
Visibly Better

revisions:

no	date	by	description

date: 06–05–08
scale: 1/2" = 1"
dr. by: HAMID
chk. by:

drawing no.
W08–58

MULLION LOAD CAPACITY – PSF
MULLIONS WITHOUT INTERMEDIATE HORIZONTALS

NOMINAL DIMS.		WITHOUT REINF.	LIGHT REINF.	HEAVY REINF.
WIDTH (W)	FRAME HEIGHT	EXT. (+) INT. (–)	EXT. (+) INT. (–)	EXT. (+) INT. (–)
32"	72"	40.0	130.0	130.0
36"		40.0	130.0	130.0
40"		40.0	130.0	130.0
44"		40.0	130.0	130.0
48"		40.0	130.0	130.0
52"		40.0	130.0	130.0
56"		40.0	130.0	130.0
60"		40.0	130.0	130.0
32"	78"	40.0	130.0	130.0
36"		40.0	130.0	130.0
40"		40.0	130.0	130.0
44"		40.0	130.0	130.0
48"		40.0	130.0	130.0
52"		40.0	130.0	130.0
56"		40.0	130.0	130.0
60"		40.0	130.0	130.0
32"	84"	40.0	130.0	130.0
36"		40.0	130.0	130.0
40"		40.0	130.0	130.0
44"		40.0	130.0	130.0
48"		40.0	130.0	130.0
52"		40.0	130.0	130.0
56"		40.0	130.0	130.0
60"		40.0	130.0	130.0
32"	90"	40.0	130.0	130.0
36"		40.0	130.0	130.0
40"		40.0	130.0	130.0
44"		40.0	130.0	130.0
48"		40.0	130.0	130.0
52"		40.0	130.0	130.0
56"		40.0	130.0	130.0
60"		40.0	130.0	130.0
32"	96"	40.0	130.0	130.0
36"		40.0	130.0	130.0
40"		40.0	130.0	130.0
44"		40.0	130.0	130.0
48"		40.0	130.0	130.0
52"		40.0	125.1	130.0
56"		40.0	118.3	130.0
60"		40.0	112.5	130.0

MULLION LOAD CAPACITY – PSF
MULLIONS WITHOUT INTERMEDIATE HORIZONTALS

NOMINAL DIMS.		WITHOUT REINF.	LIGHT REINF.	HEAVY REINF.
WIDTH (W)	FRAME HEIGHT	EXT. (+) INT. (–)	EXT. (+) INT. (–)	EXT. (+) INT. (–)
32"	102"	40.0	130.0	130.0
36"		40.0	130.0	130.0
40"		40.0	130.0	130.0
44"		40.0	126.1	130.0
48"		40.0	117.0	130.0
52"		40.0	109.5	130.0
56"		40.0	103.2	130.0
32"	108"	40.0	130.0	130.0
36"		40.0	130.0	130.0
40"		40.0	121.6	130.0
44"		40.0	111.7	130.0
48"		40.0	103.5	130.0
52"		40.0	96.7	122.3
32"	114"	40.0	130.0	130.0
36"		40.0	119.8	130.0
40"		40.0	108.7	130.0
44"		40.0	99.6	126.0
48"		40.0	92.2	116.7
32"	120"	40.0	128.2	130.0
36"		40.0	107.8	130.0
40"		40.0	97.7	123.6
44"		40.0	89.5	113.2
48"		37.6	82.7	104.7

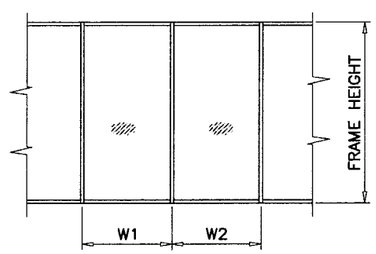

$$\text{WIDTH (W)} = \frac{W1 + W2}{2}$$

MULLION LOAD CAPACITY – PSF
MULLIONS WITH INTERMEDIATE HORIZONTALS

NOMINAL DIMS.		WITHOUT REINF.	LIGHT REINF.	HEAVY REINF.
WIDTH (W)	FRAME HEIGHT	EXT. (+) INT. (–)	EXT. (+) INT. (–)	EXT. (+) INT. (–)
32"	72"	40.0	130.0	130.0
36"		40.0	130.0	130.0
40"		40.0	130.0	130.0
44"		40.0	130.0	130.0
48"		40.0	130.0	130.0
52"		40.0	130.0	130.0
56"		40.0	130.0	130.0
60"		40.0	130.0	130.0
32"	78"	40.0	130.0	130.0
36"		40.0	130.0	130.0
40"		40.0	130.0	130.0
44"		40.0	130.0	130.0
48"		40.0	130.0	130.0
52"		40.0	130.0	130.0
56"		40.0	130.0	130.0
60"		40.0	130.0	130.0
32"	84"	40.0	130.0	130.0
36"		40.0	130.0	130.0
40"		40.0	130.0	130.0
44"		40.0	130.0	130.0
48"		40.0	130.0	130.0
52"		40.0	130.0	130.0
56"		40.0	130.0	130.0
60"		40.0	128.1	130.0
32"	90"	40.0	130.0	130.0
36"		40.0	130.0	130.0
40"		40.0	130.0	130.0
44"		40.0	130.0	130.0
48"		40.0	130.0	130.0
52"		40.0	128.8	130.0
56"		40.0	119.6	130.0
60"		40.0	111.6	130.0
32"	96"	40.0	130.0	130.0
36"		40.0	130.0	130.0
40"		40.0	130.0	130.0
44"		40.0	130.0	130.0
48"		40.0	122.6	130.0
52"		40.0	113.2	130.0
56"		40.0	105.1	130.0
60"		40.0	98.1	124.0

MULLION LOAD CAPACITY – PSF
MULLIONS WITH INTERMEDIATE HORIZONTALS

NOMINAL DIMS.		WITHOUT REINF.	LIGHT REINF.	HEAVY REINF.
WIDTH (W)	FRAME HEIGHT	EXT. (+) INT. (–)	EXT. (+) INT. (–)	EXT. (+) INT. (–)
32"	102"	40.0	130.0	130.0
36"		40.0	130.0	130.0
40"		40.0	130.0	130.0
44"		40.0	118.5	130.0
48"		40.0	108.6	130.0
52"		40.0	100.2	126.8
56"		40.0	93.1	117.7
32"	108"	40.0	130.0	130.0
36"		40.0	129.1	130.0
40"		40.0	116.2	130.0
44"		40.0	105.7	130.0
48"		40.0	96.9	122.5
52"		40.0	89.4	113.1
32"	114"	40.0	130.0	130.0
36"		40.0	115.9	130.0
40"		40.0	104.3	130.0
44"		40.0	94.8	119.9
48"		40.0	86.9	109.9
32"	120"	40.0	125.5	130.0
36"		40.0	104.6	130.0
40"		40.0	94.1	119.1
44"		38.5	85.6	108.2
48"		35.3	78.5	99.2

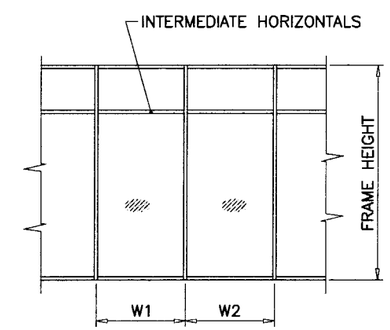

$$\text{WIDTH (W)} = \frac{W1 + W2}{2}$$

PRODUCT REVISED
In complying with the Florida Building Code
Acceptance No. 08-0620.04
Expiration Date 11/19/2009
By Craig L. Uhanda
Miami Dade Product Control Division

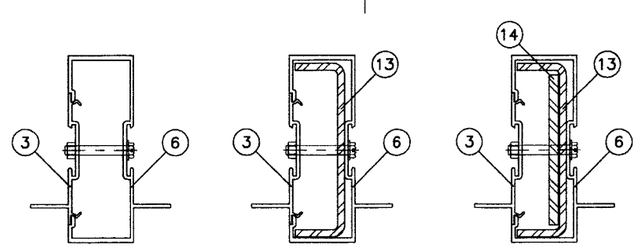

WITHOUT REINFORCING — LIGHT REINFORCING — HEAVY REINFORCING

Engr: DR. HUMAYOUN FAROOQ
STRUCTURES
FLA. PE # 16557
C.A.N. 3538

JUN 09 2008

AL-FAROOQ CORPORATION
ENGINEERS & PRODUCT DEVELOPMENT
1235 S.W. 87 AVE
MIAMI, FLORIDA 33174
TEL. (305) 264-8100 FAX. (305) 262-6978
STORE\08-58PGT

WS-3500 ALUM WINDOW WALL STOREFRONT SYS.

PGT Industries
1070 TECHNOLOGY DRIVE
NORTH VENICE, FL. 34275
1-800-284-6019
Visibly Better

revisions:

no	date	by	description

date: 06-05-08
scale: 1/2" = 1"
dr. by: HAMID
chk. by:

drawing no. W08-58

ANCHOR LOAD CAPACITY – PSF
EXT.(+) & INT.(–)

NOMINAL DIMS.		ANCHORS TYPE 'A'			ANCHORS TYPE 'B'		ANCHORS TYPE 'C'	
WIDTH (W)	FRAME HEIGHT	A2	A3	A4	B2	B3	C2	C3
32"	72"	130.0	130.0	130.0	130.0	130.0	130.0	130.0
36"		130.0	130.0	130.0	130.0	130.0	130.0	130.0
40"		130.0	130.0	130.0	130.0	130.0	130.0	130.0
44"		130.0	130.0	130.0	130.0	130.0	130.0	130.0
45"		127.1	130.0	130.0	130.0	130.0	130.0	130.0
48"		119.2	130.0	130.0	130.0	130.0	130.0	130.0
52"		110.0	130.0	130.0	130.0	130.0	130.0	130.0
56"		102.1	130.0	130.0	130.0	130.0	130.0	130.0
60"		95.3	130.0	130.0	130.0	130.0	130.0	130.0
32"	78"	130.0	130.0	130.0	130.0	130.0	130.0	130.0
36"		130.0	130.0	130.0	130.0	130.0	130.0	130.0
40"		130.0	130.0	130.0	130.0	130.0	130.0	130.0
44"		120.0	130.0	130.0	130.0	130.0	130.0	130.0
45"		117.3	130.0	130.0	130.0	130.0	130.0	130.0
48"		110.0	130.0	130.0	130.0	130.0	130.0	130.0
52"		101.5	130.0	130.0	130.0	130.0	130.0	130.0
56"		94.3	130.0	130.0	130.0	130.0	130.0	130.0
60"		88.0	123.2	130.0	121.5	130.0	121.5	130.0
32"	84"	130.0	130.0	130.0	130.0	130.0	130.0	130.0
36"		130.0	130.0	130.0	130.0	130.0	130.0	130.0
40"		122.6	130.0	130.0	130.0	130.0	130.0	130.0
44"		111.4	130.0	130.0	130.0	130.0	130.0	130.0
45"		109.0	130.0	130.0	130.0	130.0	130.0	130.0
48"		102.1	130.0	130.0	130.0	130.0	130.0	130.0
52"		94.3	130.0	130.0	130.0	130.0	130.0	130.0
56"		87.6	122.6	130.0	120.9	130.0	120.9	130.0
60"		81.7	114.4	130.0	112.9	130.0	112.9	130.0
32"	90"	130.0	130.0	130.0	130.0	130.0	130.0	130.0
36"		127.1	130.0	130.0	130.0	130.0	130.0	130.0
40"		114.4	130.0	130.0	130.0	130.0	130.0	130.0
44"		104.0	130.0	130.0	130.0	130.0	130.0	130.0
45"		101.7	130.0	130.0	130.0	130.0	130.0	130.0
48"		95.3	130.0	130.0	130.0	130.0	130.0	130.0
52"		88.0	123.2	130.0	121.5	130.0	121.5	130.0
56"		81.7	114.4	130.0	112.9	130.0	112.9	130.0
60"		76.3	106.8	130.0	105.3	130.0	105.3	130.0
32"	96"	130.0	130.0	130.0	130.0	130.0	130.0	130.0
36"		119.2	130.0	130.0	130.0	130.0	130.0	130.0
40"		107.3	130.0	130.0	130.0	130.0	130.0	130.0
44"		97.5	130.0	130.0	130.0	130.0	130.0	130.0
45"		95.3	130.0	130.0	130.0	130.0	130.0	130.0
48"		89.4	125.1	130.0	123.4	130.0	123.4	130.0
52"		82.5	115.5	130.0	113.9	130.0	113.9	130.0
56"		76.6	107.3	130.0	105.8	130.0	105.8	130.0
60"		71.5	100.1	128.7	98.8	130.0	98.8	130.0
32"	102"	126.2	130.0	130.0	130.0	130.0	130.0	130.0
36"		112.2	130.0	130.0	130.0	130.0	130.0	130.0
40"		100.9	130.0	130.0	130.0	130.0	130.0	130.0
44"		91.8	128.5	130.0	126.7	130.0	126.7	130.0
45"		89.7	125.6	130.0	123.9	130.0	123.9	130.0
48"		84.1	117.8	130.0	116.2	130.0	116.2	130.0
52"		77.6	108.7	130.0	107.2	130.0	107.2	130.0
56"		72.1	100.9	129.8	99.6	130.0	99.6	130.0

ANCHOR LOAD CAPACITY – PSF
EXT.(+) & INT.(–)

NOMINAL DIMS.		ANCHORS TYPE 'A'			ANCHORS TYPE 'B'		ANCHORS TYPE 'C'	
WIDTH (W)	FRAME HEIGHT	A2	A3	A4	B2	B3	C2	C3
32"	108"	119.2	130.0	130.0	130.0	130.0	130.0	130.0
36"		105.9	130.0	130.0	130.0	130.0	130.0	130.0
40"		95.3	130.0	130.0	130.0	130.0	130.0	130.0
44"		86.7	121.3	130.0	119.7	130.0	119.7	130.0
45"		84.7	118.6	130.0	117.0	130.0	117.0	130.0
48"		79.4	111.2	130.0	109.7	130.0	109.7	130.0
52"		73.3	102.7	130.0	101.3	130.0	101.3	130.0
32"	114"	112.9	130.0	130.0	130.0	130.0	130.0	130.0
36"		100.4	130.0	130.0	130.0	130.0	130.0	130.0
40"		90.3	126.4	130.0	124.7	130.0	124.7	130.0
44"		82.1	114.9	130.0	113.4	130.0	113.4	130.0
45"		80.3	112.4	130.0	110.9	130.0	110.9	130.0
48"		75.3	105.4	130.0	103.9	130.0	103.9	130.0
32"	120"	107.3	130.0	130.0	130.0	130.0	130.0	130.0
36"		95.3	130.0	130.0	130.0	130.0	130.0	130.0
40"		85.8	120.1	130.0	118.5	130.0	118.5	130.0
44"		78.0	109.2	130.0	107.7	130.0	107.7	130.0
45"		76.3	106.8	130.0	105.3	130.0	105.3	130.0
48"		71.5	100.1	128.7	98.8	130.0	98.8	130.0

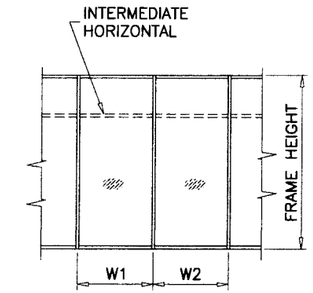

WIDTH (W) = $\frac{W1 + W2}{2}$ (MULLION)

ANCHORS TYPES: SEE SHEET 5 FOR DESCRIPTION

A2 = (2) ANCHORS TYPE 'A' AT EACH SIDE OF MULLION
B2 = (2) ANCHORS TYPE 'B' AT EACH SIDE OF MULLION
C2 = (2) ANCHORS TYPE 'C' AT EACH SIDE OF MULLION

A3 = (3) ANCHORS TYPE 'A' AT EACH SIDE OF MULLION
B3 = (3) ANCHORS TYPE 'B' AT EACH SIDE OF MULLION
C3 = (3) ANCHORS TYPE 'C' AT EACH SIDE OF MULLION

A4 = (4) ANCHORS TYPE 'A' AT EACH SIDE OF MULLION

ALL OTHER ANCHORS TO BE SPACED AS PER ELEVATION.

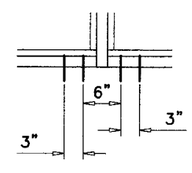

A2, B2, C2

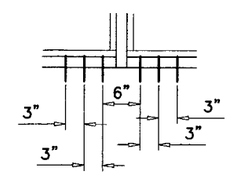

A3, B3, C3

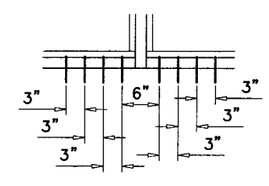

A4

PRODUCT REVISED
as complying with the Florida Building Code
Acceptance No OE-0620.04
Expiration Date MAY 26, 2009
By Ishaq I. Hunte
Miami Dade Product Control Division

Engr: DR. HUMAYOUN FAROOQ
STRUCTURES
FLA. PE # 16557
C.A.N. 3538

JUN 09 2008

AL-FAROOQ CORPORATION
ENGINEERS & PRODUCT DEVELOPMENT
1235 S.W. 87 AVE
MIAMI, FLORIDA 33174
TEL. (305) 264-8100 FAX. (305) 262-6978
STORE\08-58PGT

WS-3500 ALUM WINDOW WALL STOREFRONT SYS.

PGT Industries
1070 TECHNOLOGY DRIVE
NORTH VENICE, FL. 34275
1-800-284-6019
Visibly Better

revisions:

no	date	by	description

date: 06-05-08
scale: 1/2" = 1"
dr. by: HAMID
chk. by:

drawing no.
W08-58

DOOR MULLION LOAD CAPACITY-PSF

WIDTH (W) INCHES	FRAME HEIGHT INCHES	WITHOUT REINF. EXT. (+) INT. (−)	LIGHT REINF. EXT. (+) INT. (−)	MEDIUM REINF. EXT. (+) INT. (−)	HEAVY REINF. EXT. (+) INT. (−)
30	82	75.0	100.0	100.0	100.0
33		75.0	100.0	100.0	100.0
36		75.0	100.0	100.0	100.0
39		75.0	100.0	100.0	100.0
42		75.0	100.0	100.0	100.0
45		75.0	100.0	100.0	100.0
48		75.0	100.0	100.0	100.0
51		75.0	100.0	100.0	100.0
54		75.0	100.0	100.0	100.0
57		75.0	100.0	100.0	100.0
60		74.5	95.9	100.0	100.0
30	86	75.0	100.0	100.0	100.0
33		75.0	100.0	100.0	100.0
36		75.0	100.0	100.0	100.0
39		75.0	100.0	100.0	100.0
42		75.0	100.0	100.0	100.0
45		75.0	100.0	100.0	100.0
48		75.0	100.0	100.0	100.0
51		75.0	100.0	100.0	100.0
54		74.7	96.9	100.0	100.0
57		70.8	91.8	100.0	100.0
60		–	87.2	100.0	100.0
30	92	75.0	100.0	100.0	100.0
33		75.0	100.0	100.0	100.0
36		75.0	100.0	100.0	100.0
39		75.0	100.0	100.0	100.0
42		75.0	100.0	100.0	100.0
45		75.0	100.0	100.0	100.0
48		72.8	95.3	100.0	100.0
51		68.5	89.7	100.0	100.0
54		64.7	84.7	100.0	100.0
57		–	80.2	100.0	100.0
60		–	76.5	100.0	100.0
30	98	75.0	100.0	100.0	100.0
33		75.0	100.0	100.0	100.0
36		75.0	100.0	100.0	100.0
39		75.0	100.0	100.0	100.0
42		72.7	95.9	100.0	100.0
45		67.8	89.5	100.0	100.0
48		63.6	83.9	100.0	100.0
51		59.8	79.0	100.0	100.0
54		–	74.6	100.0	100.0
57		–	70.7	96.7	100.0
60		–	67.2	91.9	100.0
30	104	75.0	100.0	100.0	100.0
33		75.0	100.0	100.0	100.0
36		74.6	99.4	100.0	100.0
39		68.9	91.7	100.0	100.0
42		64.0	85.2	100.0	100.0
45		59.7	79.5	100.0	100.0
48		56.0	74.5	100.0	100.0
51		–	70.2	96.0	100.0
54		–	66.3	90.7	100.0
57		–	62.8	85.9	100.0
60		–	59.6	81.6	100.0

DOOR MULLION LOAD CAPACITY-PSF

WIDTH (W) INCHES	FRAME HEIGHT INCHES	WITHOUT REINF. EXT. (+) INT. (−)	LIGHT REINF. EXT. (+) INT. (−)	MEDIUM REINF. EXT. (+) INT. (−)	HEAVY REINF. EXT. (+) INT. (−)
30	110	75.0	100.0	100.0	100.0
33		69.7	96.9	100.0	100.0
36		63.9	88.8	100.0	100.0
39		59.0	82.0	100.0	100.0
42		54.8	76.1	100.0	100.0
45		51.1	71.1	97.2	100.0
48		–	66.6	91.2	100.0
51		–	62.7	85.8	100.0
54		–	59.2	81.0	100.0
57		–	56.1	76.8	97.6
60		–	53.3	72.9	92.7
30	116	–	95.9	100.0	100.0
33		–	87.1	100.0	100.0
36		–	79.9	100.0	100.0
39		–	73.7	100.0	100.0
42		–	68.5	93.7	100.0
45		–	63.9	87.4	100.0
48		–	59.9	82.0	100.0
51		–	56.4	77.2	98.1
54		–	53.3	72.9	92.6
57		–	50.5	69.0	87.7
60		–	47.9	65.6	83.4
30	120	–	89.6	100.0	100.0
33		–	81.4	100.0	100.0
36		–	74.7	100.0	100.0
39		–	68.9	94.3	100.0
42		–	64.0	87.6	100.0
45		–	59.7	81.7	100.0
48		–	56.0	76.6	97.4
51		–	52.7	72.1	91.6
54		–	49.8	68.1	86.6
57		–	47.1	64.5	82.0
60		–	44.8	61.3	77.9

SUBSTRATE	TOTAL NO. OF ANCHORS AT DOOR MULLION HEAD: WITHOUT REINF.	LIGHT REINF.	MEDIUM REINF.	HEAVY REINF.
WOOD	5	6	7	9
CONCRETE	4	5	5	6
METAL	4	5	5	6

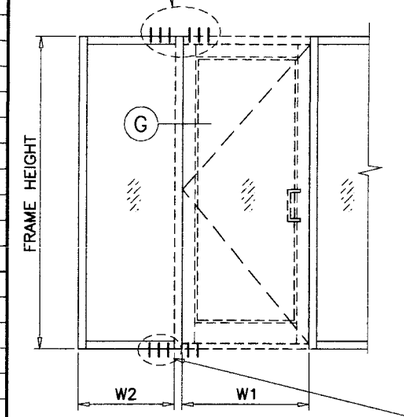

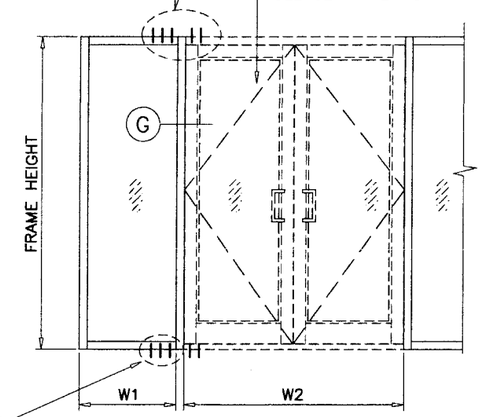

$$\text{WIDTH (W)} = \frac{W1 + W2}{2}$$

$$\text{WIDTH (W)} = \frac{W1}{2} + \frac{W2}{4}$$

SUBSTRATE	NO. OF ANCHORS AT DOOR MULLION AT FIXED LITE: WITHOUT REINF.	LIGHT REINF.	MEDIUM REINF.	HEAVY REINF.
WOOD	2	4	4	6
CONCRETE	2	3	3	4
METAL	2	3	3	4

SUBSTRATE	TOTAL NO. OF ANCHORS AT DOOR MULLION HEAD: WITHOUT REINF.	LIGHT REINF.	MEDIUM REINF.	HEAVY REINF.
WOOD	5	6	7	9
CONCRETE	4	5	5	6
METAL	4	5	5	6

PRODUCT REVISED
as complying with the Florida Building Code
Acceptance No 08-0620.04
Expiration Date MAY 20, 2009
By Shaq I. Chanda
Miami Dade Product Control Division

SUBSTRATE	NO. OF ANCHORS AT DOOR MULLION AT FIXED LITE: WITHOUT REINF.	LIGHT REINF.	MEDIUM REINF.	HEAVY REINF.
WOOD	2	4	4	6
CONCRETE	2	3	3	4
METAL	2	3	3	4

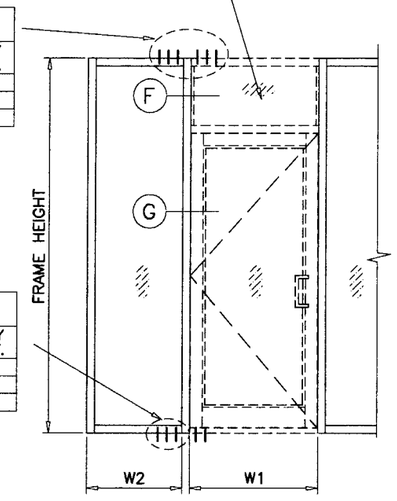

$$\text{WIDTH (W)} = \frac{W1 + W2}{2}$$

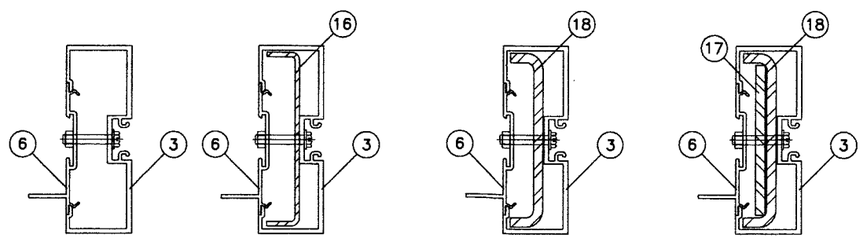

WITHOUT REINF. LIGHT REINF. MEDIUM REINF. HEAVY REINF.

Engr: DR. HUMAYOUN FAROOQ
STRUCTURES
FLA. PE # 16557
C.A.N. 3538

JUN 09 2008

AL-FAROOQ CORPORATION
ENGINEERS & PRODUCT DEVELOPMENT
1235 S.W. 87 AVE
MIAMI, FLORIDA 33174
TEL. (305) 264-8100 FAX. (305) 262-6978

STORE\08-58PGT

WS-3500 ALUM WINDOW WALL STOREFRONT SYS.

PGT Industries
1070 TECHNOLOGY DRIVE
NORTH VENICE, FL. 34275
1-800-284-6019

PGT Visibly Better

revisions:

no	date	by	description

date: 06-05-08
scale: 1/2" = 1"
dr. by: HAMID
chk. by:

drawing no. W08-58

DOOR MULLION LOAD CAPACITY – PSF

NOMINAL DIMS.			LIGHT REINF.	MEDIUM REINF.	HEAVY REINF.
FRAME HEIGHT INCHES	WIDTH (W1) INCHES	WIDTH (W2) INCHES	EXT. (+) INT. (–)	EXT. (+) INT. (–)	EXT. (+) INT. (–)
90	60	46–1/4	100.0	100.0	100.0
		52–1/4	100.0	100.0	100.0
		58–1/4	97.1	100.0	100.0
		64–1/4	91.5	100.0	100.0
	64	46–1/4	100.0	100.0	100.0
		52–1/4	100.0	100.0	100.0
		58–1/4	94.7	100.0	100.0
		64–1/4	89.4	100.0	100.0
	72	46–1/4	100.0	100.0	100.0
		52–1/4	95.7	100.0	100.0
		58–1/4	90.3	100.0	100.0
		64–1/4	85.4	100.0	100.0
	84	46–1/4	94.3	100.0	100.0
		52–1/4	89.1	100.0	100.0
		58–1/4	84.4	100.0	100.0
		64–1/4	80.1	100.0	100.0
96	60	46–1/4	93.3	100.0	100.0
		52–1/4	87.5	100.0	100.0
		58–1/4	82.4	100.0	100.0
		64–1/4	77.8	100.0	100.0
	64	46–1/4	90.6	100.0	100.0
		52–1/4	85.1	100.0	100.0
		58–1/4	80.2	100.0	100.0
		64–1/4	75.9	100.0	100.0
	72	46–1/4	85.6	100.0	100.0
		52–1/4	80.7	100.0	100.0
		58–1/4	76.3	100.0	100.0
		64–1/4	72.4	99.0	100.0
	84	46–1/4	79.1	100.0	100.0
		52–1/4	74.8	100.0	100.0
		58–1/4	71.1	97.2	100.0
		64–1/4	67.6	92.6	100.0
102	60	46–1/4	79.8	100.0	100.0
		52–1/4	75.0	100.0	100.0
		58–1/4	70.8	96.9	100.0
		64–1/4	67.0	91.6	100.0
	64	46–1/4	77.4	100.0	100.0
		52–1/4	72.9	99.7	100.0
		58–1/4	68.9	94.2	100.0
		64–1/4	65.3	89.3	100.0
	72	46–1/4	73.0	99.9	100.0
		52–1/4	68.9	94.3	100.0
		58–1/4	65.3	89.4	100.0
		64–1/4	62.1	85.0	100.0
	84	46–1/4	67.2	91.9	100.0
		52–1/4	63.8	87.3	100.0
		58–1/4	60.7	83.0	100.0
		64–1/4	57.9	79.2	100.0

DOOR MULLION LOAD CAPACITY – PSF

NOMINAL DIMS.			LIGHT REINF.	MEDIUM REINF.	HEAVY REINF.
FRAME HEIGHT INCHES	WIDTH (W1) INCHES	WIDTH (W2) INCHES	EXT. (+) INT. (–)	EXT. (+) INT. (–)	EXT. (+) INT. (–)
108	60	46–1/4	69.1	94.5	100.0
		52–1/4	65.1	89.0	100.0
		58–1/4	61.5	84.1	100.0
		64–1/4	58.3	79.7	100.0
	64	46–1/4	66.9	91.5	100.0
		52–1/4	63.1	86.4	100.0
		58–1/4	59.8	81.8	100.0
		64–1/4	56.7	77.6	98.6
	72	46–1/4	63.0	86.1	100.0
		52–1/4	59.6	81.5	100.0
		58–1/4	56.6	77.4	98.4
		64–1/4	53.9	73.7	93.7
	84	46–1/4	57.8	79.1	100.0
		52–1/4	55.0	75.2	95.6
		58–1/4	52.4	71.7	91.2
114	60	46–1/4	60.4	82.6	100.0
		52–1/4	57.0	77.9	99.1
		58–1/4	53.9	73.8	93.8
		64–1/4	51.1	70.0	88.9
	64	46–1/4	58.4	80.0	100.0
		52–1/4	55.2	75.6	96.0
		58–1/4	52.3	71.6	91.0
		64–1/4	49.7	68.1	86.5
	72	46–1/4	54.9	75.1	95.4
		52–1/4	52.0	71.2	90.5
		58–1/4	49.5	67.7	86.0
		64–1/4	47.2	64.5	82.0
	84	46–1/4	50.3	68.8	87.4
		52–1/4	47.9	65.5	83.3
120	60	46–1/4	53.2	72.8	92.6
		52–1/4	50.3	68.8	87.4
		58–1/4	47.7	65.2	82.9
		64–1/4	45.3	61.9	78.7
	64	46–1/4	51.5	70.4	89.5
		52–1/4	48.7	66.6	84.7
		58–1/4	46.2	63.3	80.4
		64–1/4	44.0	60.2	76.5
	72	46–1/4	48.2	66.0	83.9
		52–1/4	45.8	62.7	79.7
		58–1/4	43.6	59.7	75.9
	84	46–1/4	44.1	60.3	76.7

SUBSTRATE	TOTAL NO. OF ANCHORS AT DOOR MULLION HEAD UPTO 75 PSF	UPTO 100 PSF
WOOD	8	10
CONCRETE	6	7
METAL	6	7

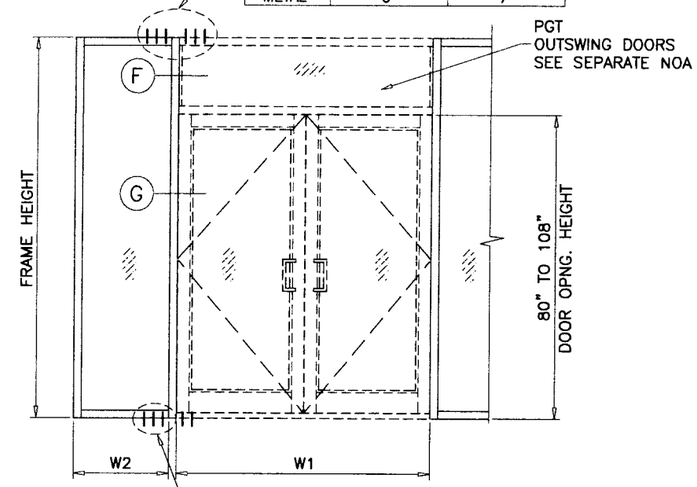

SUBSTRATE	NO. OF ANCHORS AT DOOR MULLION AT FIXED LITE UPTO 75 PSF	UPTO 100 PSF
WOOD	4	5
CONCRETE	3	4
METAL	3	4

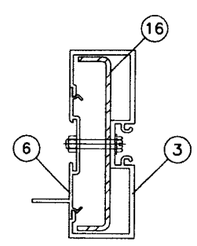

LIGHT REINF.

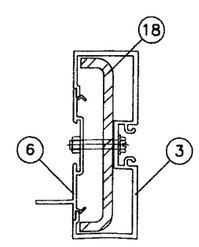

MEDIUM REINF.

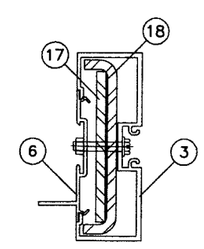

HEAVY REINF.

PRODUCT REVISED
as complying with the Florida Building Code
Acceptance No. 08-0620.04
Expiration Date MAY 20, 2009
By Elias L. Llanes Jr.
Miami Dade Product Control Division

Engr: DR. HUMAYOUN FAROOQ
STRUCTURES
FLA. PE # 16557
C.A.N. 3538

JUN 09 2008

AL-FAROOQ CORPORATION
ENGINEERS & PRODUCT DEVELOPMENT
1235 S.W. 87 AVE
MIAMI, FLORIDA 33174
TEL. (305) 264-8100 FAX. (305) 262-6978

STORE\08-58PGT

WS-3500 ALUM WINDOW WALL STOREFRONT SYS.

PGT Industries
1070 TECHNOLOGY DRIVE
NORTH VENICE, FL. 34275
1-800-284-6019
Visibly Better

revisions:		
no	date	by description

date: 06-05-08
scale: 1/2" = 1"
dr. by: HAMID
chk. by:

drawing no.
W08–58

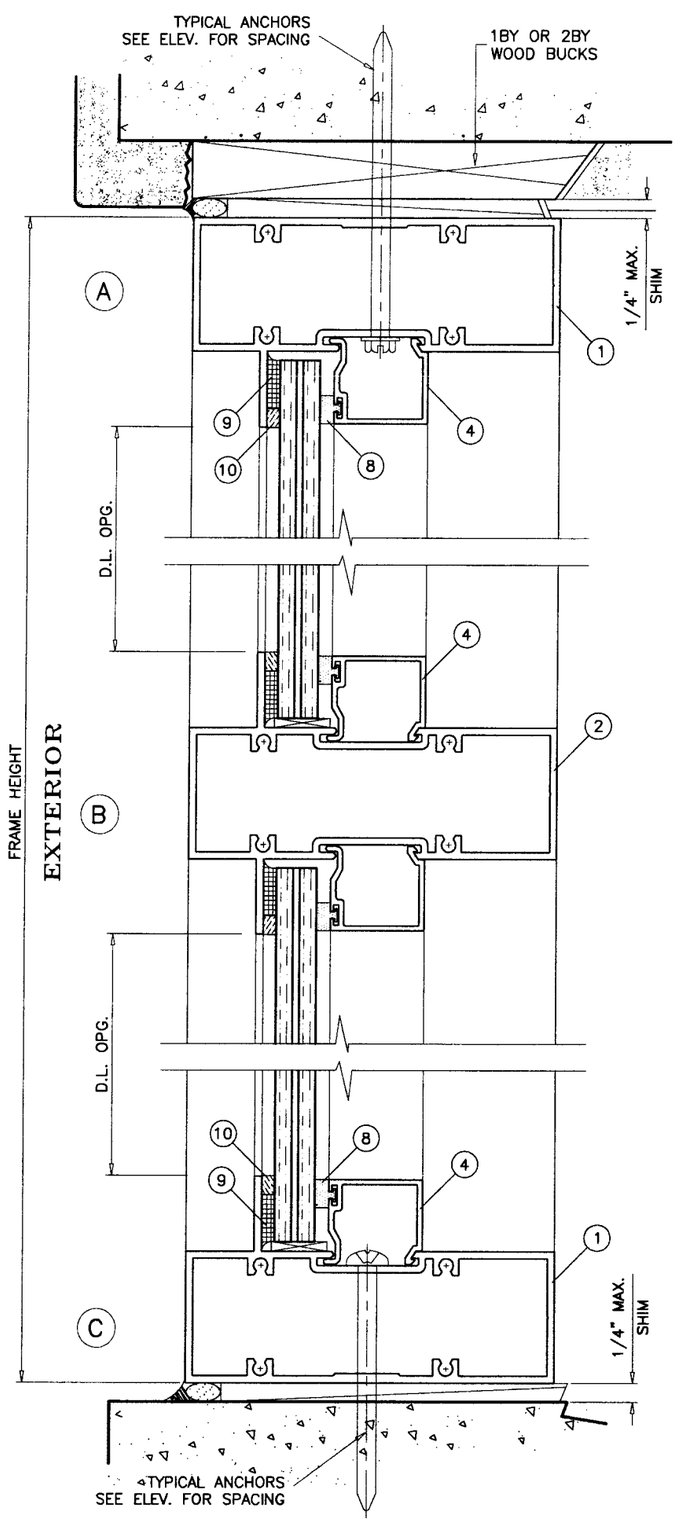

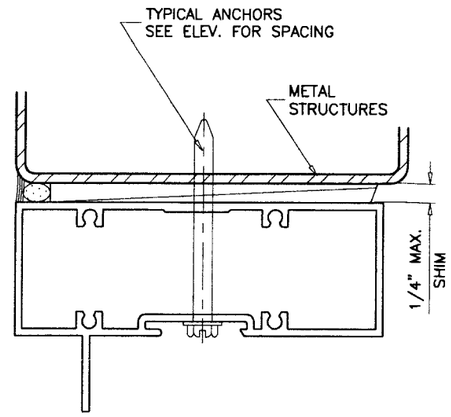

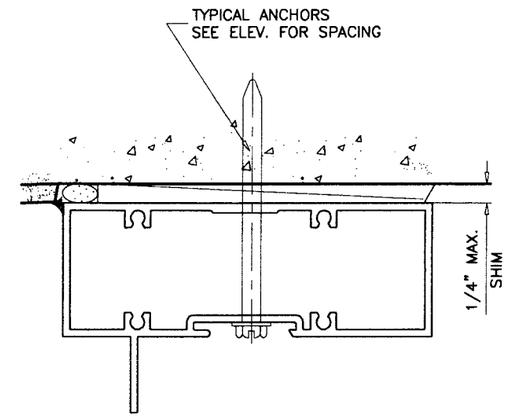

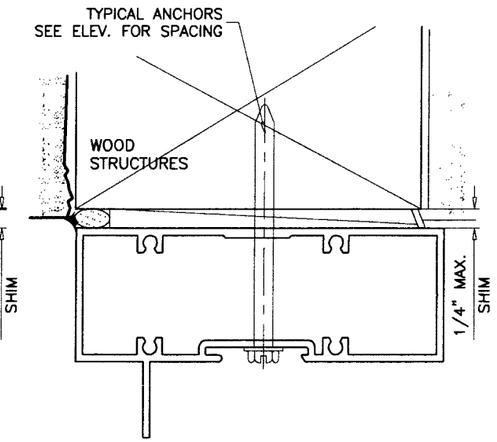

WOOD BUCKS AND METAL STRUCTURES NOT BY PGT
MUST SUPPORT LOADS IMPOSED BY GLAZING SYSTEM AND
TRANSFER THEM TO THE BUILDING STRUCTURE.

TYPICAL ANCHORS: SEE ELEV. FOR SPACING

TYPE 'A'– 1/4" DIA. ULTRACON BY 'ELCO' (Fu=177 KSI, Fy=155 KSI)
INTO 2BY WOOD BUCKS OR WOOD STRUCTURES
1–1/2" MIN. PENETRATION INTO WOOD

THRU 1BY BUCKS INTO CONC. OR MASONRY
1–1/4" MIN. EMBED INTO CONC. OR MASONRY

TYPE 'B'– 1/4" DIA. ULTRACON BY 'ELCO'
DIRECTLY INTO CONC. OR MASONRY
1–3/8" MIN. EMBED INTO CONC. OR MASONRY

TYPE 'C'– #14 SMS OR SELF DRILLING SCREWS (GRADE 2 CRS)
INTO METAL STRUCTURES
STEEL : 12 GA. MIN. (Fy = 36 KSI MIN.)
ALUMINUM : 1/8" THK. MIN. (6063–T5 MIN.)
(STEEL IN CONTACT WITH ALUMINUM TO BE PLATED OR PAINTED)

TYPICAL EDGE DISTANCE
INTO CONCRETE AND MASONRY = 2–1/2" MIN.
INTO WOOD STRUCTURE = 1" MIN.
INTO METAL STRUCTURE = 3/4" MIN.

CONCRETE f'c = 3000 PSI MIN.
MASONRY f'm = 1500 PSI MIN.

PRODUCT REVISED
as complying with the Florida
Building Code
Acceptance No 08-0620.04
Expiration Date MAY 20, 2009
By Ishaq I. Chaudhary
Miami Dade Product Control
Division

Engr: DR. HUMAYOUN FAROOQ
STRUCTURES
FLA. PE # 16557
C.A.N. 3538

JUN 0 9 2008

AL-FAROOQ CORPORATION
ENGINEERS & PRODUCT DEVELOPMENT
1235 S.W. 87 AVE
MIAMI, FLORIDA 33174
TEL. (305) 264-8100 FAX. (305) 262-6978

STORE\08-58PGT

WS-3500 ALUM WINDOW WALL STOREFRONT SYS.

PGT Industries
1070 TECHNOLOGY DRIVE
NORTH VENICE, FL. 34275
1-800-284-6019

Visibly Better

revisions:

no	date	by	description

date: 06-05-08
scale: 1/2" = 1"
dr. by: HAMID
chk. by:

drawing no.
W08-58

sheet 7 of 11

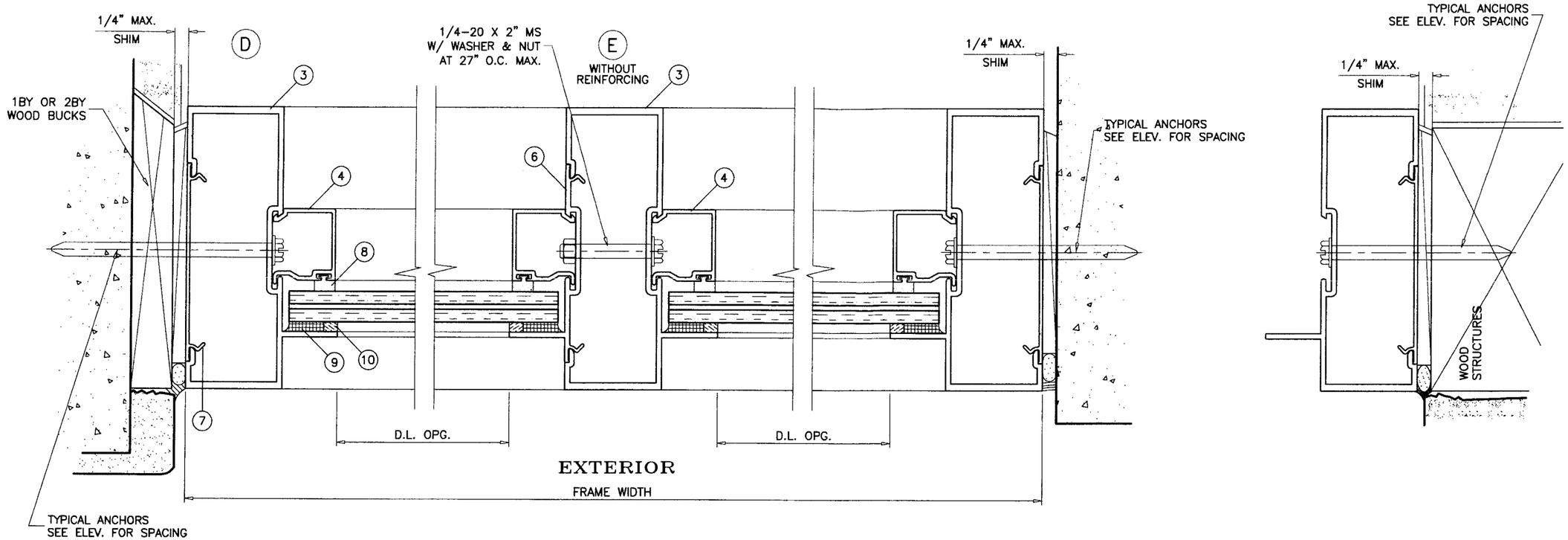

PRODUCT REVISED
as complying with the Florida
Building Code
Acceptance No 06-0620.04
Expiration Date MAY 20, 2009
By Ishaq I. Chanda
Miami Dade Product Control
Division

Engr: DR. HUMAYOUN FAROOQ
STRUCTURES
FLA. PE # 16557
C.A.N. 3538

JUN 0 9 2008

afc

AL-FAROOQ CORPORATION
ENGINEERS & PRODUCT DEVELOPMENT
1235 S.W. 87 AVE
MIAMI, FLORIDA 33174
TEL. (305) 264-8100 FAX. (305) 262-6978

STORE\08-58PGT

WS-3500 ALUM WINDOW WALL STOREFRONT SYS.

PGT Industries
1070 TECHNOLOGY DRIVE
NORTH VENICE, FL. 34275
1-800-284-6019
Visibly Better

revisions:

no	date	by	description

date: 06-05-08
scale: 1/2" = 1"
dr. by: HAMID
chk. by:

drawing no.
W08-58

sheet 8 of 11

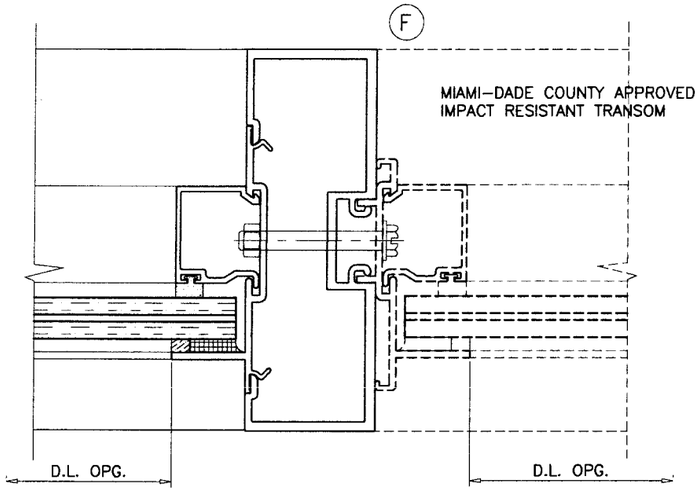

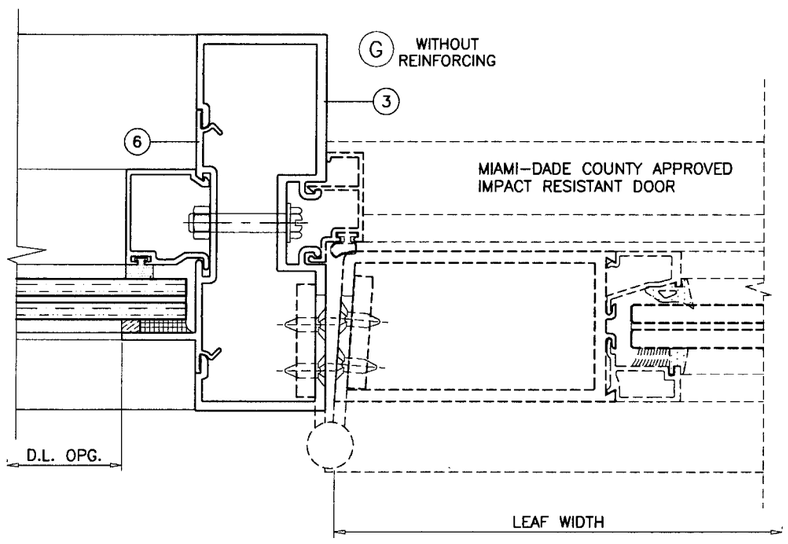

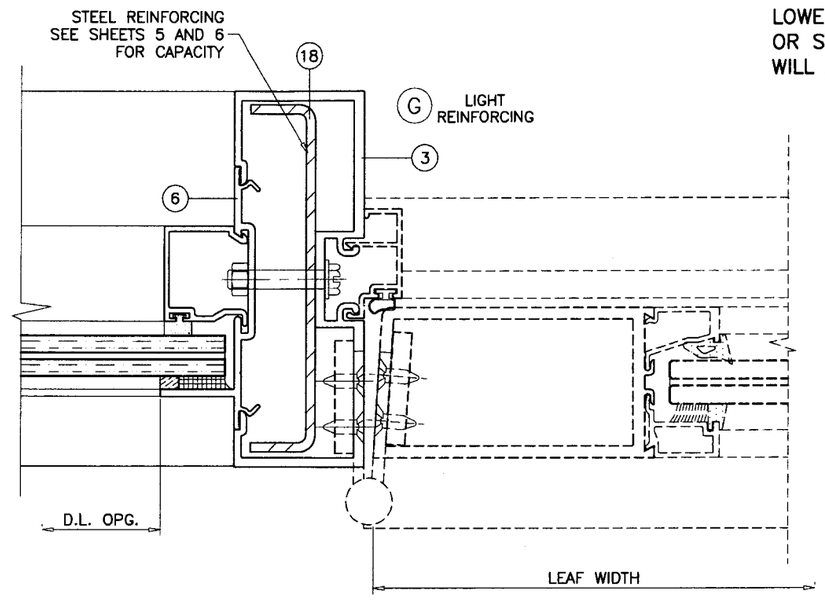

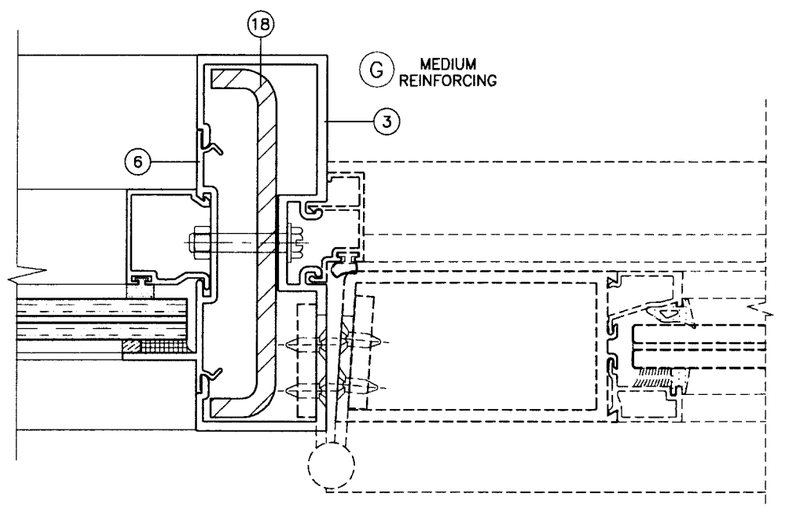

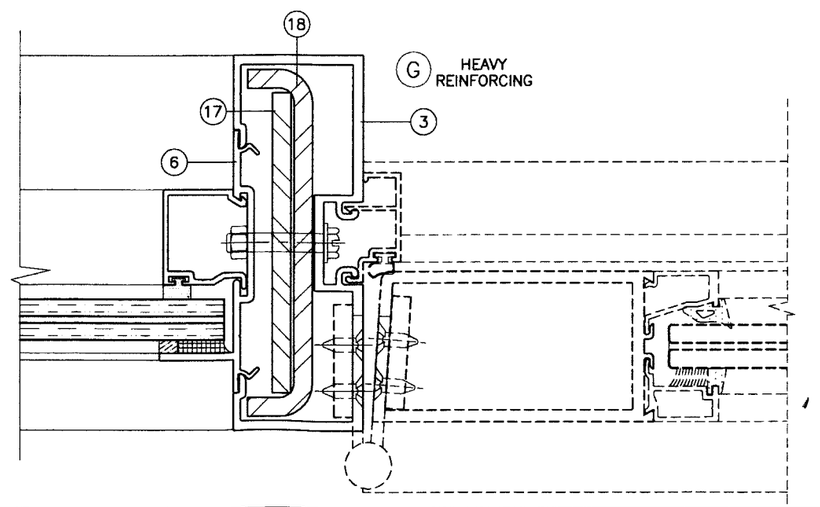

SEE SEPARATE NOA FOR DESIGN LOAD CAPACITY OF DOORS AND DOOR ANCHORS.

LOWER VALUES FROM DOORS NOA OR STOREFRONT SYSTEM CAPACITY CHARTS WILL APPLY TO ENTIRE SYSTEM.

PRODUCT REVISED
as complying with the Florida Building Code
Acceptance No 08-0620.04
Expiration Date MAY 24 2009
By Shaq I. Chand
Miami Dade Product Control Division

Engr: DR. HUMAYOUN FAROOQ
STRUCTURES
FLA. PE # 16557
C.A.N. 3538

JUN 09 2008

AL-FAROOQ CORPORATION
ENGINEERS & PRODUCT DEVELOPMENT
1235 S.W. 87 AVE
MIAMI, FLORIDA 33174
TEL. (305) 264-8100 FAX. (305) 262-6978

STORE\08-58PGT

WS-3500 ALUM WINDOW WALL STOREFRONT SYS.

PGT Industries
1070 TECHNOLOGY DRIVE
NORTH VENICE, FL. 34275
1-800-284-8019
Visibly Better

revisions:			
no	date	by	description

date: 06-05-08
scale: 1/2" = 1"
dr. by: HAMID
chk. by:

drawing no.
W08-58

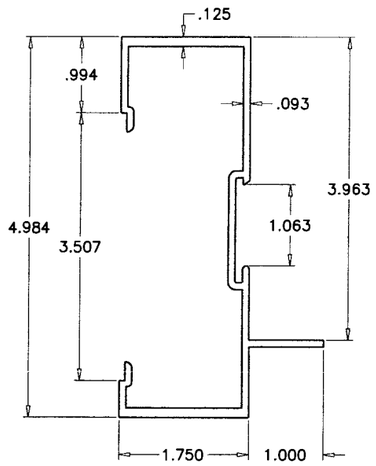

3 FRAME JAMB/MULLION

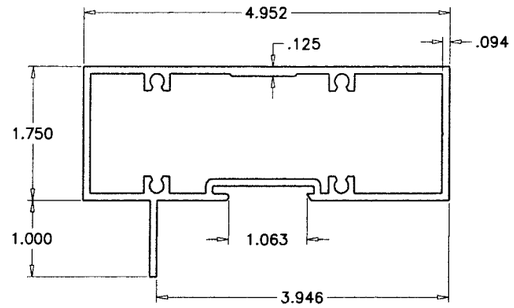

1 FRAME HEAD/SILL

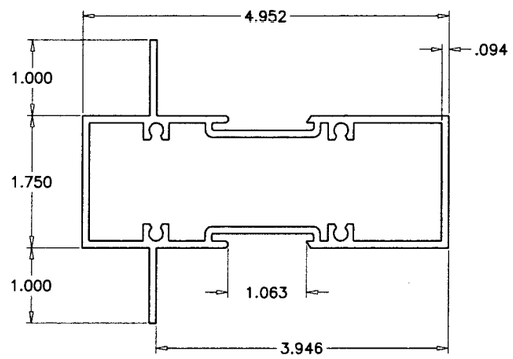

2 FRAME HORIZONTAL

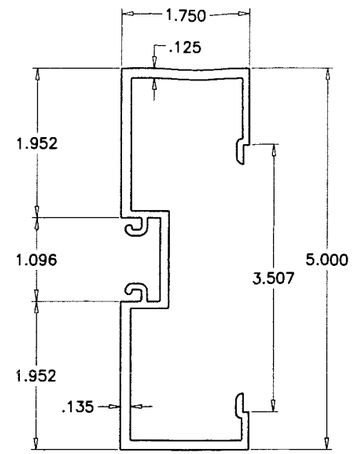

15 DOOR MULLION

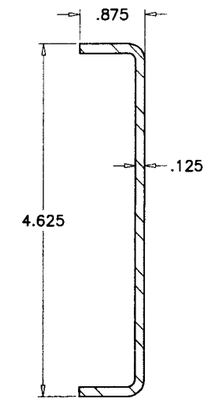

16 DOOR MULL REINF. CHANNEL LIGHT

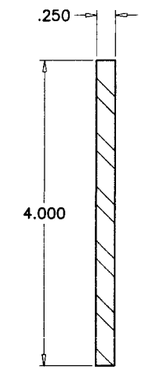

17 DOOR MULL REINF. BAR HEAVY

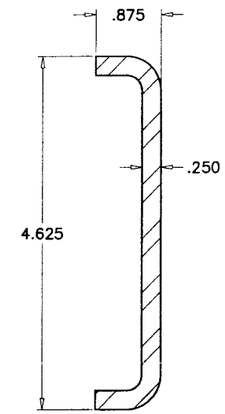

18 DOOR MULL REINF. CHANNEL MEDIUM/HEAVY

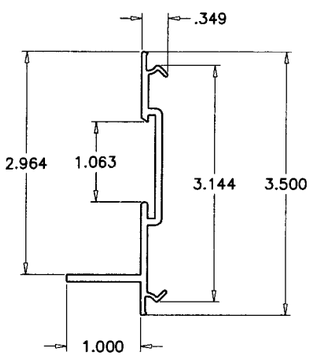

6 POCKET FILLER

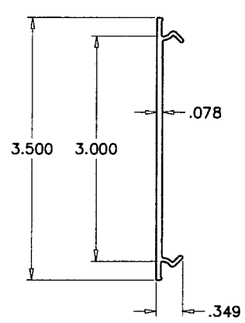

7 SNAP IN COVER

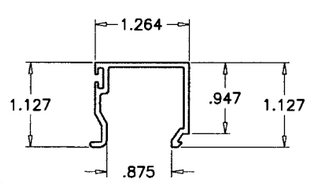

4 GLAZING STOP

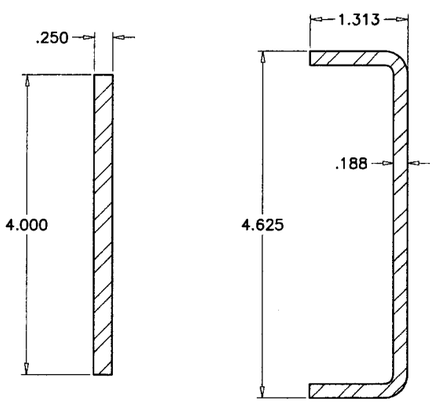

14 MULLION STEEL REINFORCING 36 KSI MIN. 13

PRODUCT REVISED
as complying with the Florida Building Code
Acceptance No 08-0620.04
Expiration Date May 20, 2009
By Cheng I. Liu
Miami Dade Product Control Division

Engr: DR. HUMAYOUN FAROOQ
STRUCTURES
FLA. PE # 16557
C.A.N. 3538

JUN 09 2008

AL-FAROOQ CORPORATION
ENGINEERS & PRODUCT DEVELOPMENT
1235 S.W. 87 AVE
MIAMI, FLORIDA 33174
TEL. (305) 264-8100 FAX. (305) 262-6978

STORE\08-58PGT

WS-3500 ALUM WINDOW WALL STOREFRONT SYS.

PGT Visibly Better

PGT Industries
1070 TECHNOLOGY DRIVE
NORTH VENICE, FL. 34275
1-800-284-6019

revisions:

no	date	by	description

date: 06-05-08
scale: 1/2" = 1"
dr. by: HAMID
chk. by:

drawing no. W08-58

sheet 10 of 11

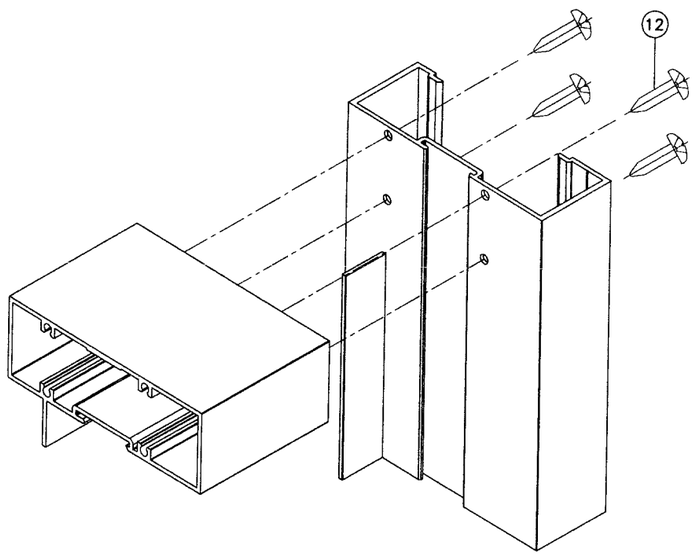

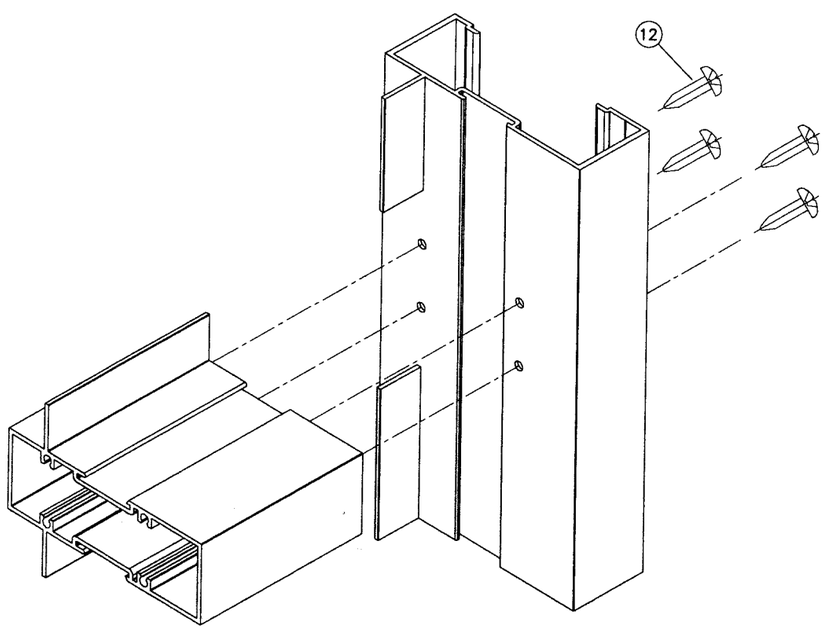

ITEM NO.	PART NUMBER	QUANTITY	DESCRIPTION	MATERIAL	MANF./SUPPLIER/REMARKS
1	DLD-103	AS REQD.	FRAME HEAD/SILL	6063-T5	–
2	DLD-104	AS REQD.	FRAME HORIZONTAL	6063-T6	–
3	DLD-100	AS REQD.	FRAME JAMB/MULLION	6063-T6	–
4	DLD-102	AS REQD.	GLAZING STOP	6063-T5	–
5	–	–	–	–	–
6	DLD-101	AS REQD.	POCKET FILLER	6063-T6	–
7	BCE-475	AS REQD.	SNAP IN COVER, 2-1/2" LONG	6063-T6	–
8	–	AS REQD.	GLAZING GASKET	NEOPRENE	–
9	–	AS REQD.	GLAZING COMPOUND	SILICONE	DOW 995
10	–	AS REQD.	GLAZING TAPE	–	NORTON
11	–	AS REQD.	SETTING BLOCK AT 1/4" POINTS	NEOPRENE	1/8" X 3/4" X 2" LONG
12	#12 X 1-1/4"	4/ CORNER	ASSEMBLY SCREWS PHSMS	STEEL	–
13	–	AS REQD.	MULLION REINFORCING CHANNEL	STEEL	–
14	–	AS REQD.	MULLION REINFORCING BAR	STEEL	–
15	DLD-124	2/DOOR	DOOR MULLION	6063-T6	–
16	–	AS REQD.	REINFORCING CHANNEL (LIGHT)	STEEL	–
17	–	AS REQD.	REINFORCING CHANNEL (MEDIUM/HEAVY)	STEEL	–
18	–	AS REQD.	REINFORCING BAR (HEAVY)	STEEL	–

PRODUCT REVISED
as complying with the Florida Building Code
Acceptance No 06-0620.04
Expiration Date MAY 26, 2009
By [illegible]
Miami Dade Product Control Division

Engr: DR. HUMAYOUN FAROOQ
STRUCTURES
FLA. PE # 16557
C.A.N. 3538

JUN 09 2008

AL-FAROOQ CORPORATION
ENGINEERS & PRODUCT DEVELOPMENT
1235 S.W. 87 AVE
MIAMI, FLORIDA 33174
TEL. (305) 264-8100 FAX. (305) 262-6978
STORE\08-58PGT

WS-3500 ALUM WINDOW WALL STOREFRONT SYS.

PGT Industries
1070 TECHNOLOGY DRIVE
NORTH VENICE, FL. 34275
1-800-284-6019
Visibly Better

revisions:

no	date	by	description

date: 06-05-08
scale: 1/2" = 1"
dr. by: HAMID
chk. by:

drawing no.
W08-58