MIAMI-DADE COUNTY
BUILDING CODE COMPLIANCE OFFICE (BCCO)
PRODUCT CONTROL DIVISION

MIAMI-DADE COUNTY, FLORIDA
METRO-DADE FLAGLER BUILDING

140 WEST FLAGLER STREET, SUITE 1603
MIAMI, FLORIDA 33130-1563
(305) 375-2901 FAX (305) 375-2908
www.miamidade.gov

NOTICE OF ACCEPTANCE (NOA)

MetalTech, Inc.
7635 West 2nd Court
Hialeah, Florida 33014

SCOPE:
This NOA is being issued under the applicable rules and regulations governing the use of construction materials. The documentation submitted has been reviewed by Miami-Dade County Product Control Division and accepted by the Board of Rules and Appeals (BORA) to be used in Miami Dade County and other areas where allowed by the Authority Having Jurisdiction (AHJ).

This NOA shall not be valid after the expiration date stated below. The Miami-Dade County Product Control Division (In Miami Dade County) and/or the AHJ (in areas other than Miami Dade County) reserve the right to have this product or material tested for quality assurance purposes. If this product or material fails to perform in the accepted manner, the manufacturer will incur the expense of such testing and the AHJ may immediately revoke, modify, or suspend the use of such product or material within their jurisdiction. BORA reserves the right to revoke this acceptance, if it is determined by Miami-Dade County Product Control Division that this product or material fails to meet the requirements of the applicable building code.

This product is approved as described herein, and has been designed to comply with the High Velocity Hurricane Zone of the Florida Building Code.

DESCRIPTION: " 6.8 " Aluminum Accordion Shutter

APPROVAL DOCUMENT: Drawing No. 08-226, titled " 6.8 Accordion Shutter ", sheets 1 through 11 of 11, prepared by Knezevich Associates Consulting Engineers, dated October 20, 2008, signed and sealed by V. J. Knezevich, P.E., bearing the Miami-Dade County Product Control Approval stamp with the Notice of Acceptance number and the approval date by the Miami-Dade County Product Control Division.

MISSILE IMPACT RATING: Large and Small Missile Impact

LABELING: Each unit shall bear a permanent label with the manufacturer's name or logo, city, state and the following statement: "Miami-Dade County Product Control Approved", unless otherwise noted herein.

RENEWAL of this NOA shall be considered after a renewal application has been filed and there has been no change in the applicable building code negatively affecting the performance of this product.

TERMINATION of this NOA will occur after the expiration date or if there has been a revision or change in the materials, use, and/or manufacture of the product or process. Misuse of this NOA as an endorsement of any product, for sales, advertising or any other purposes shall automatically terminate this NOA. Failure to comply with any section of this NOA shall be cause for termination and removal of NOA.

ADVERTISEMENT: The NOA number preceded by the words Miami-Dade County, Florida, and followed by the expiration date may be displayed in advertising literature. If any portion of the NOA is displayed, then it shall be done in its entirety.

INSPECTION: A copy of this entire NOA shall be provided to the user by the manufacturer or its distributors and shall be available for inspection at the job site at the request of the Building Official.

This NOA consists of this page 1, evidence submitted page E-1 as well as approval document mentioned above.
The submitted documentation was reviewed by **Helmy A. Makar, P.E., M.S.**

MIAMI-DADE COUNTY APPROVED

Helmy A. Makar
11/27/2008

NOA No. 08-0620.07
Expiration Date: 11/27/2013
Approval Date: 11/27/2008

NOTICE OF ACCEPTANCE: EVIDENCE SUBMITTED

A. DRAWINGS

1. *Drawing No. 08-226, titled " 6.8 Accordion Shutter ", sheets 1 through 11 of 11, prepared by Knezevich Associates Consulting Engineers, dated October 20, 2008, signed and sealed by V. J. Knezevich, P.E.*

B. TESTS

1. *See Association's generic approval under 08-0725.*

C. CALCULATIONS

1. *See Association's generic approval under 08-0725.*

D. QUALITY ASSURANCE

1. *By Miami-Dade County Building Code Compliance Office.*

E. MATERIAL CERTIFICATIONS

1. *See Association's generic approval under 08-0725.*

F. STATEMENTS

1. *Release letter issued by the Southern Shutter Association, Inc., dated May 22, 2008, certifying this product to meet the criteria of product tested and approved, and allowing MetalTech, Inc. to use the test results approved under Miami-Dade County Approval No. 08-0725, signed by Mr. Thomas B. Johnston.*
2. *Acknowledgment letter by MetalTech, Inc., dated May 22, 2008, signed by Mr. Steve Buzzella.*
3. *Letter by Knezevich Associates Consulting Engineers, dated May 23, 2008, certifying that the drawing (No. 08-226) prepared for MetalTech, Inc., signed and sealed by Mr. V. John Knezevich, P.E., is engineering wise identical to SSA's generic drawing (08-0224).*

Helmy A. Makar, P.E., M.S.
Product Control Examiner
NOA No. 08-0620.07
Expiration Date: 11/27/2013
Approval Date: 11/27/2008

6.8 ACCORDION SHUTTER

TABLE 1 — HVHZ
MANDATORY COMPLIANCE

ACCORDION SHUTTER SPAN SCHEDULE

ASCE 7 DESIGN WIND LOAD	HVHZ POSITIVE WIND LOAD WITH UNIMATE (30)	HVHZ POSITIVE WIND LOAD WITH (29a) & (29b) or (31) & (32) or (33) & (34)	HVHZ NEGATIVE WIND LOAD ALL MOUNTING CONDITIONS
W (P.S.F.)	L max. (FT - IN)	L max. (FT - IN)	L max. (FT - IN)
23.9	13-0	13-0	13-0
29.2	12-5	13-0	13-0
30.0	12-4	12-11	13-0
35.0	11-10	12-6	13-0
40.0	11-5	12-1	13-0
45.0	11-1	11-8	13-0
50.0	10-10	11-5	13-0
54.3	10-7	11-2	13-0
55.0	10-7	11-1	12-11
60.0	10-4	10-11	12-4
65.0	10-2	10-8	11-10
70.0	9-11	10-6	11-5
75.0	9-9	10-3	11-0
80.0	9-7	10-1	10-8
85.0	9-6	10-0	10-4
90.0	9-4	9-10	10-1
95.0	9-3	9-8	9-10
100.0	9-1	9-7	9-7
105.0	9-0	9-4	9-4
110.0	8-11	9-1	9-1
115.0	8-9	8-11	8-11
120.0	8-8	8-9	8-9
125.0	-	-	8-6
130.0	-	-	8-4
135.0	-	-	8-3
140.0	-	-	7-11
145.0	-	-	7-8
150.0	-	-	7-5
155.0	-	-	7-2
160.0	-	-	6-11
165.0	-	-	6-9
170.0	-	-	6-6
175.0	-	-	6-4
180.0	-	-	6-2
185.0	-	-	6-0
190.0	-	-	5-10
195.0	-	-	5-8
200.0	-	-	5-6

TABLE 2 — HVHZ
MANDATORY COMPLIANCE

MINIMUM SHUTTER SEPARATION FROM GLASS

POSITIVE DESIGN LOAD	ACTUAL SHUTTER SPAN	MIN. SEPARATION FROM GLASS FOR INSTALLATIONS ≤ 30'-0" ABOVE GRADE	MIN. SEPARATION FROM GLASS FOR INSTALLATIONS > 30'-0" ABOVE GRADE
(W) (P.S.F.)	(L) (FT - IN)	(IN.)	(IN.)
29.3	13-0	3-3/4	3-3/8
30.0	5-0	3	1
	8-3	2-1/4	1-3/8
	10-0	2-1/4	1-3/4
	12-11	3-3/4	3-1/2
50.0	5-0	3	1-1/8
	8-3	2-1/4	1-5/8
	9-0	2-1/4	2
	11-5	3-3/4	3-1/2
70.0	5-0	3	1-1/8
	7-0	3	1-1/2
	8-3	2-1/4	1-3/4
	10-6	3-3/4	3-1/2
90.0	5-0	3	1-1/8
	7-0	3	1-5/8
	8-3	2-1/4	2-1/4
	9-10	3-1/2	3-1/2
110.0	5-0	3	1-1/4
	6-0	3	1-3/8
	8-3	2-1/2	2-1/2
	9-1	3-1/4	3-1/4
120.0	5-0	3	1-1/4
	7-0	3	1-3/4
	8-3	2-5/8	2-5/8
	8-9	3	3

HVHZ-(TABLES 1 & 2 ONLY) TABLE NOTES:

1. HVHZ: DEFINED AS MIAMI-DADE COUNTY AND BROWARD COUNTY FLORIDA.
2. WIND LOADS: DETERMINE POSITIVE AND NEGATIVE WIND LOAD FROM ASCE 7.
3. SPAN: IN TABLE 1, ENTER POSITIVE AND NEGATIVE WIND LOADS AND READ ACROSS TO THE APPROPRIATE COLUMN TO DETERMINE MAX. SHUTTER SPAN (BLADE LENGTH).
4. REVERSING: THE 6.8 SYSTEM MAY BE MOUNTED WITH THE INSIDE AND OUTSIDE OF THE SHUTTER BEING REVERSED. FOR EXAMPLE: IT IS PERMISSIBLE TO MOUNT ON THE INSIDE OF A WOOD OR CONCRETE BEAM WITH THE BACK OF THE SLAT FACING OUTWARD. FOR THIS CONDITION YOU MUST ENSURE THAT THE SPANS IN THE APPROPRIATE POSITIVE COLUMN OF TABLE 1 ARE APPLIED IN THE DIRECTION TOWARDS THE HOST STRUCTURE AND THE SPANS IN THE NEGATIVE COLUMN OF TABLE 1 ARE APPLIED IN THE DIRECTION AWAY FROM THE HOST STRUCTURE.
5. SEPARATION TO GLASS: DETERMINE SEPARATION FROM GLASS VALUE IN TABLE 2 WITH THE APPROPRIATE POSITIVE LOAD AND SHUTTER SPAN.
6. FOR DESIGN WIND LOADS BETWEEN TABULATED VALUES, USE LINEAR INTERPOLATION TO DETERMINE SPANS AND SEPARATION FROM GLASS, EXCEPT FOR LESS THAN 30 FT. WHERE INTERPOLATION IS NOT ALLOWED AND THE NEXT HIGHER LOAD MUST BE USED.

HURRICANE MAXIMUM IMPACT™ SHUTTERS

Approved as complying with the Florida Building Code
Date 11/27/2008
NOA# 08-0620.07
Miami Dade Product Control Division
By Helena A. Molina

TABLE 3 — NON-HVHZ & ASTM Wind Zone 4

ACCORDION SHUTTER SPAN SCHEDULE

ASCE 7 DESIGN WIND LOAD	POSITIVE & NEGATIVE WIND LOAD ALL MOUNTING CONDITIONS
W (P.S.F.)	L max. (FT - IN)
0 to 54.3	13-0
55.0	12-11
60.0	12-4
65.0	11-10
70.0	11-5
75.0	11-0
80.0	10-8
85.0	10-4
90.0	10-1
95.0	9-10
100.0	9-7
105.0	9-4
110.0	9-1
115.0	8-11
120.0	8-9
125.0	8-6
130.0	8-4
135.0	8-3
140.0	7-11
145.0	7-8
150.0	7-5
155.0	7-2
160.0	6-11
165.0	6-9
170.0	6-6
175.0	6-4
180.0	6-2
185.0	6-0
190.0	5-10
195.0	5-8
200.0	5-6

NON-HVHZ & ASTM WIND ZONE 4 - (TABLES 3 & 4 ONLY) TABLE NOTES:

1. NON-HVHZ: DEFINED AS ALL LOCATIONS OTHER THAN MIAMI-DADE COUNTY AND BROWARD COUNTY FLORIDA.
2. WIND LOADS: DETERMINE POSITIVE AND NEGATIVE WIND LOADS FROM ASCE 7.
3. SPAN: IN TABLE 3, ENTER NEGATIVE WIND LOAD ONLY, DETERMINED FROM ASCE 7, THEN MOVE ACROSS TO SELECT THE ALLOWABLE SHUTTER SPAN (BLADE LENGTH).

TABLE 4 — NON-HVHZ ASTM Wind Zone 4 - ONLY

MINIMUM SHUTTER SEPARATION FROM GLASS

POSITIVE DESIGN LOAD	ACTUAL SHUTTER SPAN	MIN. SEPARATION FROM GLASS FOR INSTALLATIONS ≤ 30'-0" ABOVE GRADE	MIN. SEPARATION FROM GLASS FOR INSTALLATIONS > 30'-0" ABOVE GRADE
(W) (P.S.F.)	(L) (FT - IN)	(IN.)	(IN.)
30.0	5-0	3	1
	8-3	2-1/4	1-3/8
	10-0	2-1/4	1-3/4
	13-0	3-3/4	3-1/2
40.0	5-0	3	1-1/8
	8-3	2-1/4	1-1/2
	9-0	2-1/4	1-3/4
	10-0	2-1/4	2-1/8
	11-0	3-3/4	2-5/8
	13-0	4-1/4	4-1/4
50.0	5-0	3	1-1/8
	8-3	2-1/4	1-5/8
	9-0	2-1/4	2
	10-0	2-3/8	2-3/8
	11-0	3-3/4	3-1/8
	13-0	5-1/8	5-1/8
60.0	5-0	3	1-1/8
	8-3	2-1/4	1-3/4
	9-0	2-1/4	2-1/8
	10-0	2-3/4	2-3/4
	12-4	5	5
70.0	5-0	3	1-1/8
	7-0	2-1/4	1-1/2
	8-3	2-1/4	1-3/4
	11-5	4-1/2	4-1/2
90.0	5-0	3	1-1/8
	7-0	2-1/4	1-5/8
	8-3	2-1/4	2-1/4
	10-1	3-3/4	3-5/8
110.0	5-0	3	1-1/4
	7-0	2-1/4	1-3/4
	8-3	2-1/2	2-1/2
	9-1	3-1/4	3-1/4
120.0	5-0	3	1-1/4
	7-0	2-1/4	1-3/4
	8-3	2-5/8	2-5/8
	8-9	3	3

4. REVERSING: THE 6.8 SYSTEM MAY BE MOUNTED WITH THE INSIDE AND OUTSIDE OF THE SHUTTER BEING REVERSED. FOR EXAMPLE: IT IS PERMISSIBLE TO MOUNT ON THE INSIDE OF A WOOD OR CONCRETE BEAM WITH THE BACK OF THE SLAT FACING OUTWARD. FOR THIS CONDITION, IN ASTM WIND ZONE 4, USE THE APPROPRIATE POSITIVE LOAD/NEGATIVE LOAD AND SHUTTER SPANS IN THE APPROPRIATE POSITIVE COLUMN OF TABLE 4.
5. SEPARATION TO GLASS: (TABLE 2 or 4) IS NOT REQUIRED IN WIND ZONES 1 THRU 3 (140 MPH WIND SPEED OR LESS). SEPARATION FROM GLASS TABLE 4 IS REQUIRED FOR WIND ZONE 4 (141 MPH OR GREATER WIND SPEEDS). ENTER TABLE 4 WITH THE DESIGN POSITIVE LOAD AND READ ACROSS TO THE SEPARATION FROM GLASS VALUE IN COLUMNS 1 OR 2 (WHICHEVER IS APPROPRIATE).
6. FOR DESIGN WIND LOADS BETWEEN TABULATED VALUES, USE THE NEXT HIGHER LOAD OR USE LINEAR INTERPOLATION TO DETERMINE ALLOWABLE SHUTTER SPAN.

KNEZEVICH ASSOCIATES
Consulting Engineers
2590 S.W. 105th Terrace * Davie, Florida 33324
(954) 821-6933 * F (954) 452-7960 * COA. 27989
website: www.knezevich.com * email: VJK@knezevich.com

Copyright ©2008 V.Knezevich & Associates, LLC d/b/a Knezevich Associates

MAXIMUM IMPACT 6.8 ACCORDION
METALTECH, INC.
7836 W. SECOND CT. HIALEAH, FL. 33014
EST. 1987

revisions

no	date	by	description

V.J. Knezevich
Professional Engineer
FL License No.: PE 0010983
FLORIDA COA No.: 27989

Oct 20, 2008

drawn by	scale
wbs	AS NOTED

date 10/20/2008

project no. 08-226

Rev: 08-10-17 - 10:30

6.8 ACCORDION SHUTTER

GENERAL NOTES:

1. THESE EVALUATION DOCUMENTS REPRESENT A SHUTTER SYSTEM ANALYZED WITH THE PROVISION SET FOR THE ISSUANCE OF A NOTICE OF ACCEPTANCE (NOA) BY MIAMI-DADE COUNTY PRODUCT CONTROL DIVISION, FOR THE HIGH VELOCITY HURRICANE ZONE (HVHZ) & NON-HIGH VELOCITY HURRICANE ZONE (NON-HVHZ) OF THE FLORIDA BUILDING CODE.
2. THIS SYSTEM HAS BEEN TESTED AND EVALUATED AND IS IN COMPLIANCE WITH THE INTERNATIONAL BUILDING CODE (IBC) AND THE INTERNATIONAL RESIDENTIAL CODE (IRC).
3. NO INCREASE IN ALLOWABLE STRESS HAS BEEN USED IN THE DESIGN OF THESE PRODUCTS. WIND LOAD DURATION FACTOR Cd = 1.6 WAS USED FOR WOOD LAG SCREW DESIGN.
4. THIS SYSTEM HAS BEEN TESTED AND EVALUATED AND IS IN COMPLIANCE WITH THE FLORIDA BUILDING CODE (FBC) REQUIREMENTS, INCLUDING THE HIGH VELOCITY HURRICANE ZONE (HVHZ). THIS SYSTEM MEETS MISSILE LEVEL "D" AND INCLUDES WIND ZONE 4 AS DEFINED IN ASTM E1996-05.
5. TESTING WAS CONDUCTED IN ACCORDANCE WITH TAS 201/202/203 AND ASTM E1886-05/E1996-05/E330-02.
6. DETERMINE THE POSITIVE AND NEGATIVE DESIGN LOADS TO USE WHEN REFERENCING THESE DOCUMENTS IN ACCORDANCE WITH THE GOVERNING CODE AND GOVERNING WIND VELOCITY. FOR WIND LOAD CALCULATIONS IN ACCORDANCE WITH ASCE 7, A DIRECTIONALITY FACTOR OF Kd =0.85 SHALL BE USED.
7. THESE APPROVAL DOCUMENTS ARE GENERIC AND DO NOT INCLUDE INFORMATION FOR SITE-SPECIFIC APPLICATION OF THIS SHUTTER SYSTEM.
8. USE OF THESE APPROVAL DOCUMENTS SHALL COMPLY WITH CHAPTER 61G15-23 OF THE FLORIDA ADMINISTRATIVE CODE.
9. THESE APPROVAL DOCUMENTS ARE SUITABLE TO BE APPLIED BY THE CONTRACTOR PROVIDED THE CONTRACTOR DOES NOT DEVIATE FROM THE CONDITIONS DETAILED HEREIN AND THE CONTRACTOR VERIFIES THAT THE EXISTING STRUCTURE DOES NOT DEVIATE IN EITHER FORM OR MATERIAL FROM THE STRUCTURAL SUBSTRATES DETAILED HEREIN.
10. ANY MODIFICATIONS OR ADDITIONS TO THESE APPROVAL DOCUMENTS WILL VOID THE APPROVAL DOCUMENTS.
11. WHEN THE SITE CONDITIONS DEVIATE FROM THESE APPROVAL DOCUMENTS, THE BUILDING OFFICIAL MAY ELECT ONE OF THE FOLLOWING OPTIONS:

A) REQUIRE THAT SITE SPECIFIC DOCUMENTS BE PREPARED, SIGNED, DATED AND SEALED BY A LICENSED ENGINEER OR REGISTERED ARCHITECT, WHICH DETAIL AND JUSTIFY THE DEVIATION. AS A CONDITION TO THE BUILDING OFFICIAL GRANTING HIS/HER APPROVAL.

B) REQUIRE THAT A ONE-TIME SITE SPECIFIC APPROVAL BE APPLIED FOR AND SECURED FROM THE MIAMI-DADE COUNTY PRODUCT CONTROL DIVISION.

WHEN THE SITE CONDITION DEVIATIONS OCCUR WITHIN THE HIGH VELOCITY HURRICANE ZONE AREAS, ONLY OPTION "B" SHALL BE ACCEPTED BY THE BUILDING OFFICIAL.

12. EACH SHUTTER ASSEMBLY SHALL BE PERMANENTLY LABELED WITH THE FOLLOWING MINIMUM INFORMATION:

METALTECH INC.
HIALEAH, FLORIDA
MISSILE "D" - ASTM E1886, E1996 & E330
TAS 201, 202 & 203
MIAMI-DADE COUNTY PRODUCT CONTROL APPROVED

13. ALL EXTRUSIONS SHOWN SHALL BE 6063-T6 ALUMINUM ALLOY, U.O.N., WITH A MINIMUM Fy OF 25 K.S.I.
14. ALL BOLTS AND WASHERS (EXCLUDING INSTALLATION) SHALL BE STAINLESS STEEL WITH A MINIMUM TENSILE STRENGTH OF 60 K.S.I., U.O.N. POP RIVETS SHALL BE 1/4"ø OR 3/16"ø 5052 ALUM. ALLOY.
15. ALL SHUTTERS SHALL HAVE A LOCKING MECHANISM CONSISTING OF THUMBSCREW, PUSH LOCK OR BOX LOCK AT CENTER OR SIDE CLOSURE.
16. TOP AND BOTTOM DETAILS MAY BE INTERCHANGED AS FIELD CONDITIONS REQUIRE. SEE PAGE 5 FOR LOCK LOCATIONS AND DETAILS.
17. FLOOR TRACKS MAY BE REMOVABLE AT NON-STACKING LOCATIONS. USE REMOVABLE ANCHORS.
18. THE ACCORDION SHUTTERS MAY BE MOUNTED WITH THE INSIDE AND OUTSIDE OF SHUTTER BEING REVERSED. FOR EXAMPLE: IT IS PERMISSIBLE TO MOUNT EXTRUSIONS ON INSIDE OF WOOD OR CONCRETE BEAM WITH BACK OF SHUTTER FACING OUTSIDE (SEE PAGE 5 - TYPICAL PLAN VIEW).
19. DETAIL 5, 16 & 27 on page 3 to 4, MAY BE BENT TO FORM A CURVE WITH A MIN. RADIUS OF 10".
20. ALL DIMENSIONS SHOWN INCLUDE POWDER COATING FINISH.

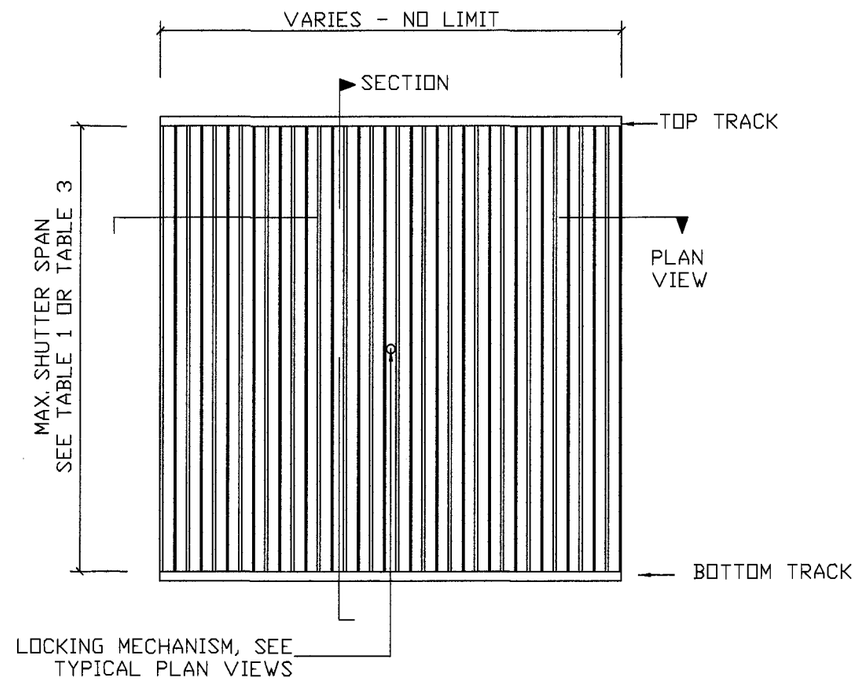

TYPICAL ACCORDION SHUTTER ELEVATION

N.T.S.

Approved as complying with the Florida Building Code
Date 11/27/2008
NOA# 08-0620.07
Miami Dade Product Control Division
By

KNEZEVICH ASSOCIATES
Consulting Engineers
2590 S.W. 105th Terrace
Davie, Florida 33324
T (954) 821-6933 * F (954) 452-7960 * COA 27989
website: www.knezevich.com * email: VJK@knezevich.com

Copyright ©2008 VJKnezevich & Associates, LLC d/b/a Knezevich Associates

MAXIMUM IMPACT 6.8 ACCORDION

METALTECH, INC.
EST. 1967
7836 W. SECOND CT. HIALEAH, FL. 33014

revisions			
no	date	by	description

V.J. Knezevich
Professional Engineer
FL License No.: PE-0010983
FLORIDA COA No.: 27989

Oct 20, 2008

drawn by	scale
wbs	AS NOTED

date 10/20/2008

project no. 08-226

Rev: 08-10-17 - 10:30

6.8 ACCORDION SHUTTER

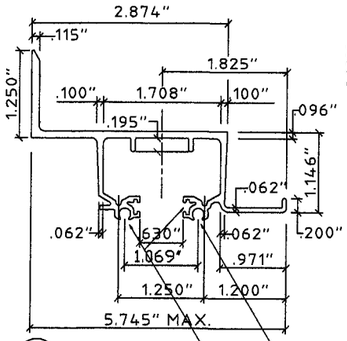

1 WALL
SCALE: HALF SIZE

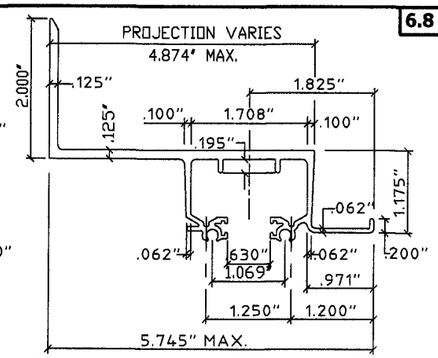

2 BUILD OUT WALL
SCALE: HALF SIZE

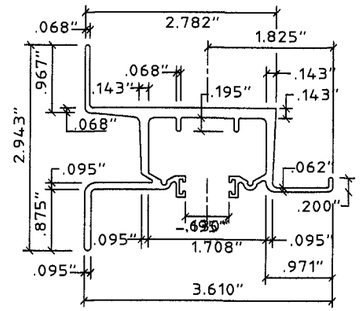

3 HEAVY 2-LEG WALL
SCALE: HALF SIZE

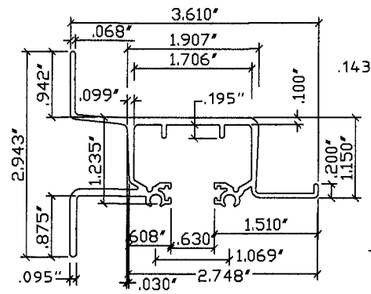

4 LITE 2-LEG WALL
SCALE: HALF SIZE

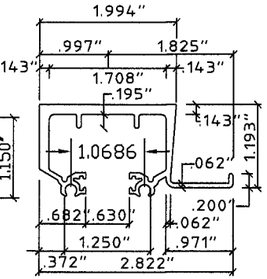

5 HEAVY HEADER/SILL
SCALE: HALF SIZE

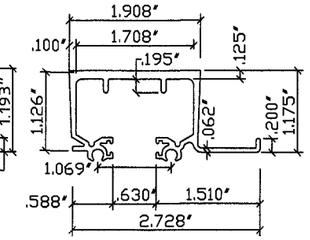

6 LITE HEADER/SILL
SCALE: HALF SIZE

WHERE SHOWN SCREW BOSSES & FELT GROVES ARE OPTIONAL ON ALL EXTRUSIONS

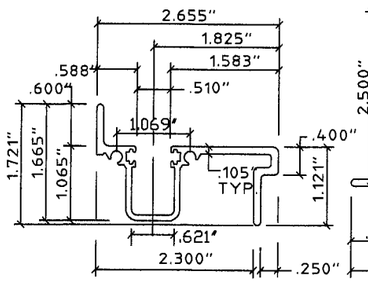

7 SILL
SCALE: HALF SIZE

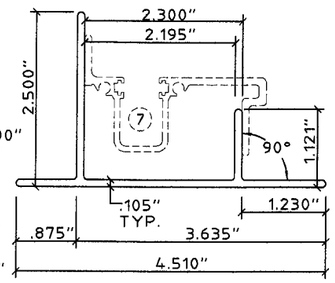

8 SILL ADAPTER
SCALE: HALF SIZE

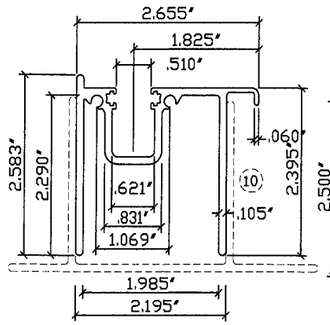

9 EXTENDED SILL
SCALE: HALF SIZE

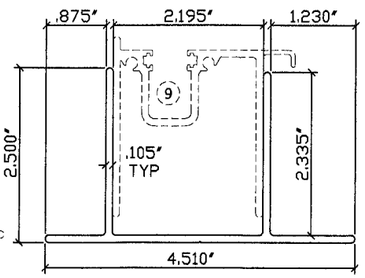

10 EXTENDED SILL ADAPTOR
SCALE: HALF SIZE

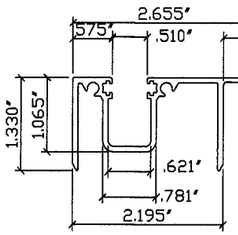

11 MID SILL
SCALE: HALF SIZE

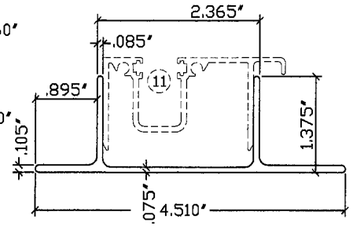

12 MID SILL ADAPTOR
SCALE: HALF SIZE

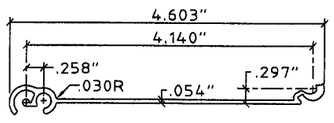

13 TYP. 6.8 SLAT/BLADE
SCALE: HALF SIZE

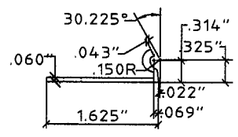

17 6.8 STARTER
SCALE: HALF SIZE

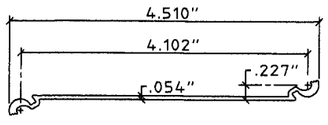

15 6.8 STACK/CONECTOR SLAT/BLADE
SCALE: HALF SIZE

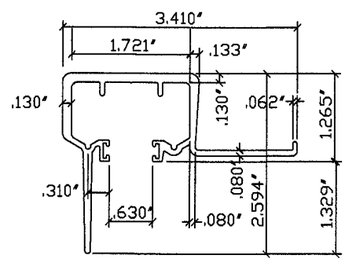

14 CEILING HEADER/SILL
SCALE: HALF SIZE

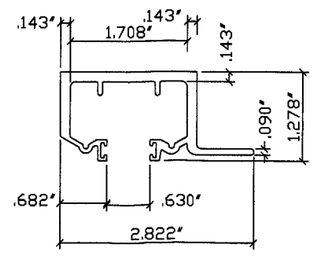

16 RADIUS CEILING HEADER/SILL
SCALE: HALF SIZE

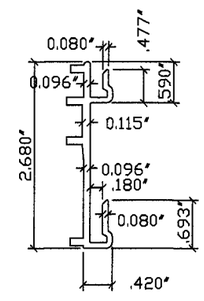

18a WALL SILL CLIP
SCALE: HALF SIZE

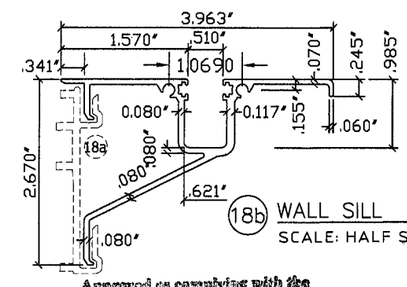

18b WALL SILL
SCALE: HALF SIZE

Approved as complying with the Florida Building Code
Date 11/27/2008
NOA# 08-0626.07
Miami Dade Product Control Division
By Henry A. Weber

KNEZEVICH ASSOCIATES
Consulting Engineers
2590 S.W. 106th Terrace
Davie, Florida 33324
T (954) 821-6933 * F (954) 452-7980 * COA 27989
website: www.knezevich.com * email: VJK@knezevich.com

Copyright ©2008 V.Knezevich & Associates, LLC d/b/a Knezevich Associates

MAXIMUM IMPACT 6.8 ACCORDION
METALTECH, INC.
EST. 1957
7838 W. SECOND CT. HIALEAH, FL. 33014

revisions

no	date	by	description

V.J. Knezevich
Professional Engineer
FL License No.: PE 0010983
FLORIDA COA No. 27989

Oct 20, 2008

drawn by	scale
wbs	AS NOTED

date 10/20/2008

project no. 08-226

6.8 ACCORDION SHUTTER

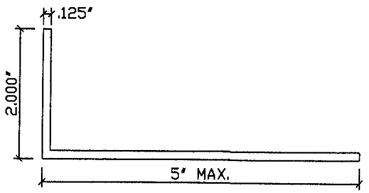

(19) ANGLE
SCALE: HALF SIZE

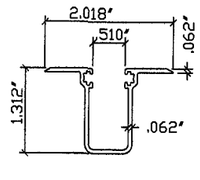

(20) RECESS SILL
SCALE: HALF SIZE

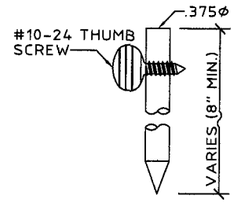

FOR USE WITH (33) AND (34) ONLY

(21) SLIDE ROD
SCALE: HALF SIZE

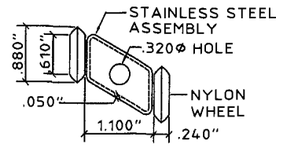

TYP. AT EVERY OTHER INSIDE JOINT AT TOP.

(22) ROLLER ASSEMBLY
SCALE: HALF SIZE

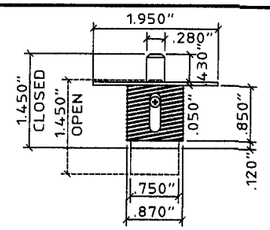

CYLINDER-SOLID BRASS, NICKEL PLATED
HOUSING-ZINC DICAST, POWDER COATED
NOTE: MAY BE KEY OPERATED OUTSIDE OR THUMB TURN OPERATED INSIDE.

(23) BRASS PUSH LOCK
SCALE: HALF SIZE

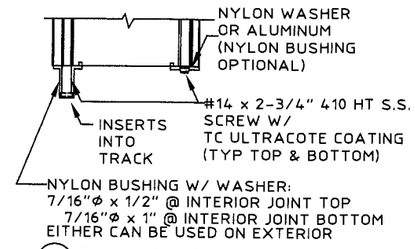

(24) BUSHING ASSEMBLY DETAIL
SCALE: HALF SIZE

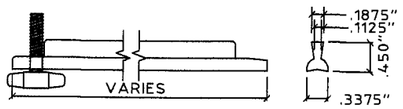

WHERE LOCK PINS ARE USED, THEY ARE ENGAGED IN THE STACKED POSITION & AREN'T REQ'D IN THE CLOSED POSITION.

(25) OPTIONAL ALUMINUM OR PVC LOCK PIN FOR 29A+29B
SCALE: HALF SIZE

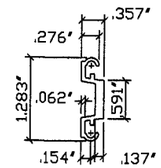

(26) BOX CENTER INSERT
SCALE: HALF SIZE

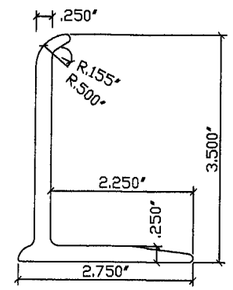

(27) RAINGUARD
SCALE: HALF SIZE

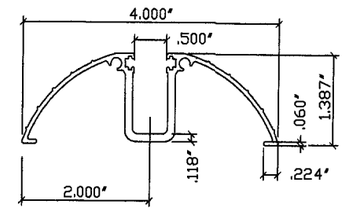

(28) DECORATIVE FLOOR TRACK
SCALE: HALF SIZE

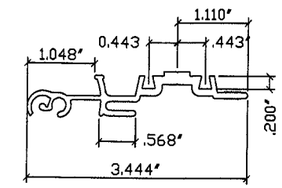

(29a) OLD 6.8 CENTER MATE
SCALE: HALF SIZE

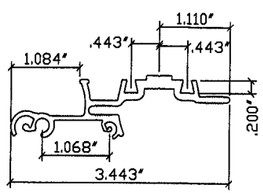

(29b) 2003 6.8 CENTER MATE
SCALE: HALF SIZE

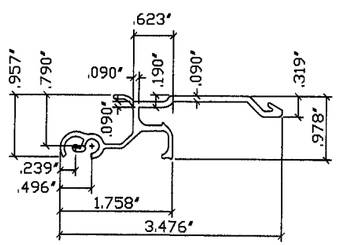

(30) UNIMATE LOCK
SCALE: HALF SIZE

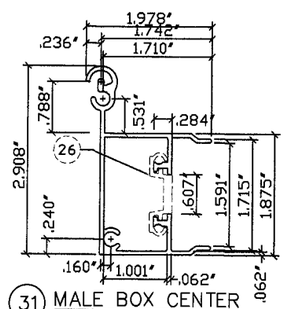

(31) MALE BOX CENTER
SCALE: HALF SIZE

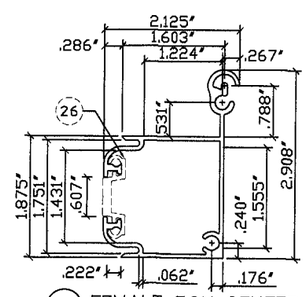

(32) FEMALE BOX CENTER
SCALE: HALF SIZE

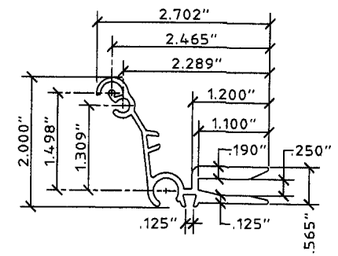

(33) OUTSIDE CENTER MATE
SCALE: HALF SIZE

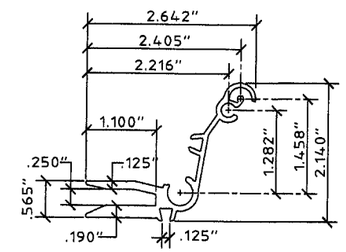

(34) INSIDE CENTER MATE
SCALE: HALF SIZE

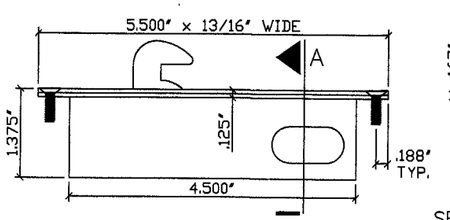

DELTA MODEL 2022 INDUSTRIAL SYSTEMS

(35) BOX LOCK
SCALE: HALF SIZE

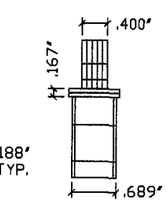

SECTION A

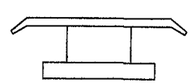

POWDER COATED, ZINC DIE-CAST

(36) T-LOCK ADAPTER (OPTIONAL)
SCALE: HALF SIZE

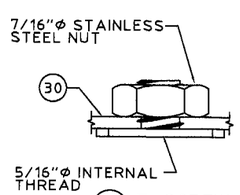

(37) T-SCREW INSERT
SCALE: FULL SIZE

HEAD STYLE VARIES

(38) THUMB SCREW
SCALE: FULL SIZE

1/4-20x1 OR 5/16-18x1 MACHINE SCREW STAINLESS STEEL

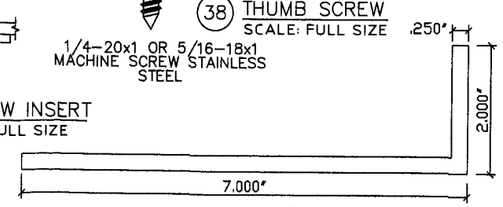

(39) 2X7 ANGLE
SCALE: HALF SIZE

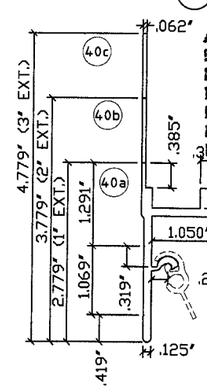

(40a) (40b) (40c)
END STRIP 1" 2" & 3" EXT
SCALE: HALF SIZE

Approved as complying with the Florida Building Code
Date 11/27/2008
NOA# 08-0620.07
Miami Dade Product Control Division
By

KNEZEVICH ASSOCIATES
Consulting Engineers
2590 S.W. 105th Terrace • Davie, Florida 33324
T (954) 821-6933 • F (954) 452-7960 • COA 27989
website: www.Knezevich.com • email: VJK@Knezevich.com

Copyright ©2008 VKnezevich & Associates, LLC d/b/a Knezevich Associates

MAXIMUM IMPACT 6.8 ACCORDION
METALTECH, INC.
EST. 1957 7506 W. SECOND CT. HIALEAH, FL 33014

revisions			
no	date	by	description

V.J. Knezevich
Professional Engineer
FL License No.: PE 0010983
FLORIDA COA No.: 27989

Oct 20, 2008

drawn by	scale
wbs	AS NOTED

date 10/20/2008
project no. 08-226

6.8 ACCORDION SHUTTER

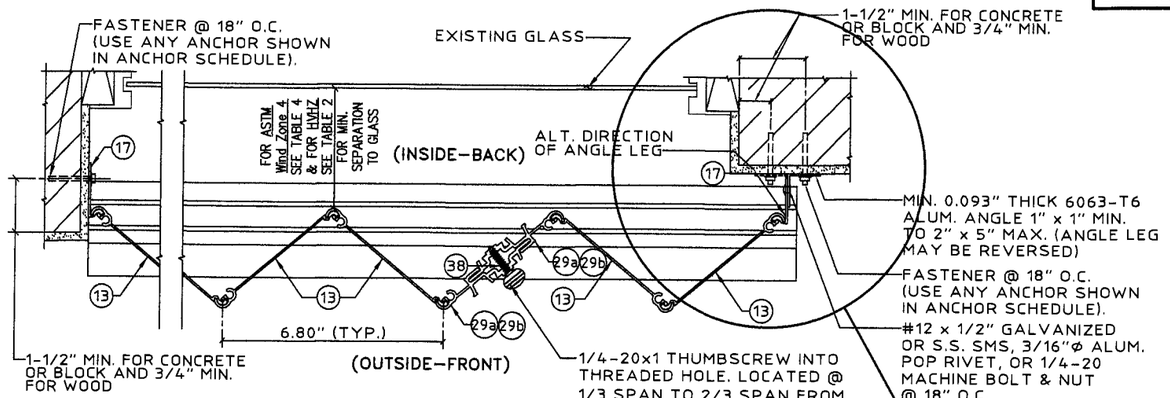

TYPICAL PLAN VIEW
SCALE: 3" = 1'-0"

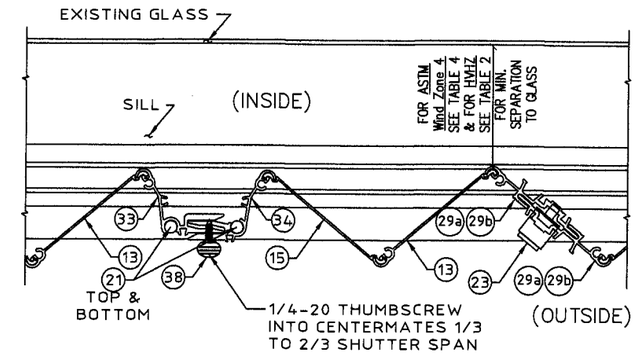

MULTIPLE SHUTTER ASSEMBLY
SCALE: 3" = 1'-0"

LOCKING DETAILS FOR CENTER MATES SHOWN ON RANDOM DETAILS

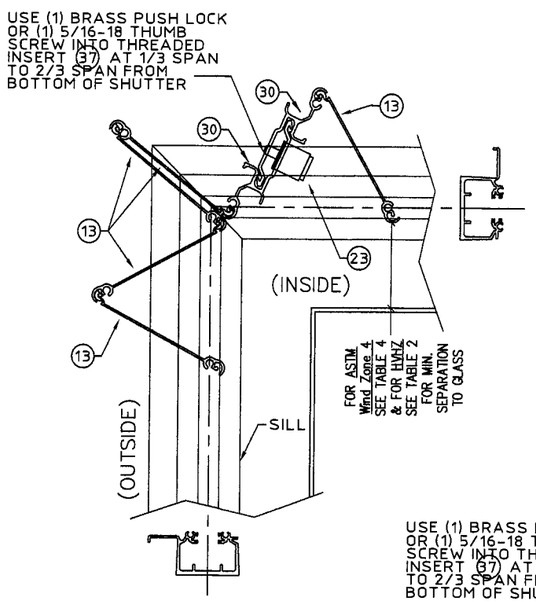

(CC1) TYPICAL OUTSIDE CORNER CLOSURE DETAILS WO/CORNER POST
NTS

END STRIP SCHEDULE		
	PSF	SPAN
1"B/O (2.7") (40a)	62	108.1
	72	100.3
	82	94
	112	80.4
	132	76.1
2"B/O (3.7") (40b)	62	99.8
	72	92.6
	82	86.7
3"B/O (4.7") (40c)	62	92.7
	72	86
	82	80.6

FOR GREATER SPANS OR LOADS THAN SHOWN IN TABLE ABOVE, END STRIPS REQUIRE A 1"X1" .090" CLIP ANGLE MID SPAN USING ANY ANCHOR ON THE ANCHOR SCHEDULE & #14x3/4" TEK SCREW OR 1/4-20 BOLT TO END STRIP.

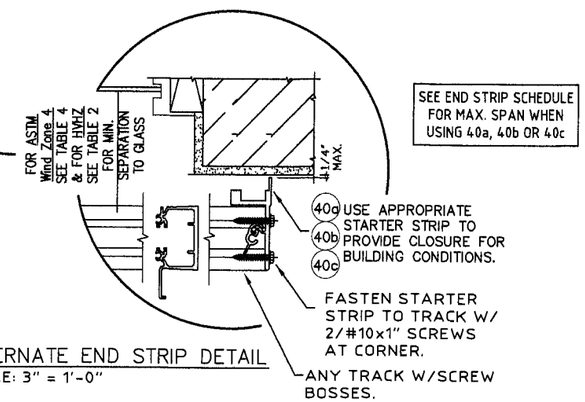

ALTERNATE END STRIP DETAIL
SCALE: 3" = 1'-0"

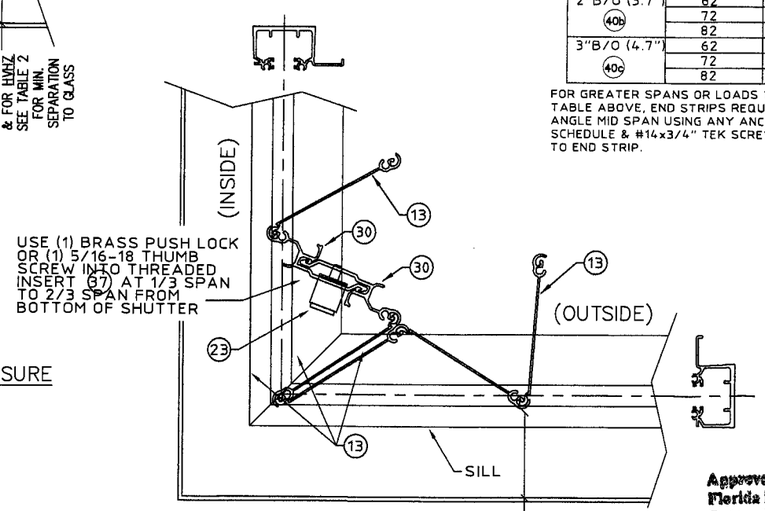

(CC2) TYPICAL INSIDE CORNER CLOSURE DETAILS WO/CORNER POST
NTS

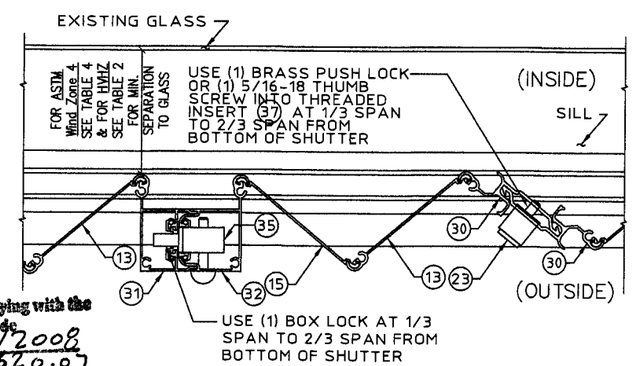

MULTIPLE SHUTTER ASSEMBLY
SCALE: 3" = 1'-0"

Approved as complying with the Florida Building Code
Date 11/27/2008
NOA# 08-0620.07
Miami Dade Product Control Division
By

KNEZEVICH ASSOCIATES
Consulting Engineers
2590 S.W. 105th Terrace * Davie, Florida 33324
T (954) 821-6933 * F (954) 452-7960 * COA 27989
website: www.knezevich.com * email: VJK@knezevich.com

Copyright ©2008 V.Knezevich & Associates, LLC d/b/a Knezevich Associates

MAXIMUM IMPACT 6.8 ACCORDION
METALTECH, INC.
EST. 1957 7838 W. SECOND CT. HIALEAH, FL. 33014

revisions

no	date	by	description

V.J. Knezevich
Professional Engineer
FL License No.: PE 0010983
FLORIDA COA No.: 27989

Oct 20, 2008

drawn by: WBS
scale: AS NOTED
date: 10/20/2008
project no.: 08-226

6.8 ACCORDION SHUTTER

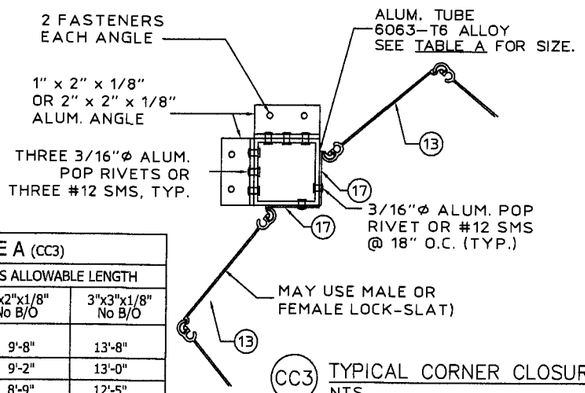

TABLE A (CC3)		
PRESSURE VS ALLOWABLE LENGTH		
PSF	2"x2"x1/8" No B/O	3"x3"x1/8" No B/O
62	9'-8"	13'-8"
72	9'-2"	13'-0"
82	8'-9"	12'-5"
92	8'-5"	11'-11"
102	8'-2"	11'-7"
120	7'-9"	10'-11"
150	7'-2"	10'-2"
200	6'-6"	9'-3"

CC3 TYPICAL CORNER CLOSURE DETAILS
NTS

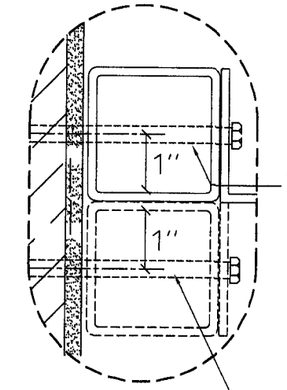

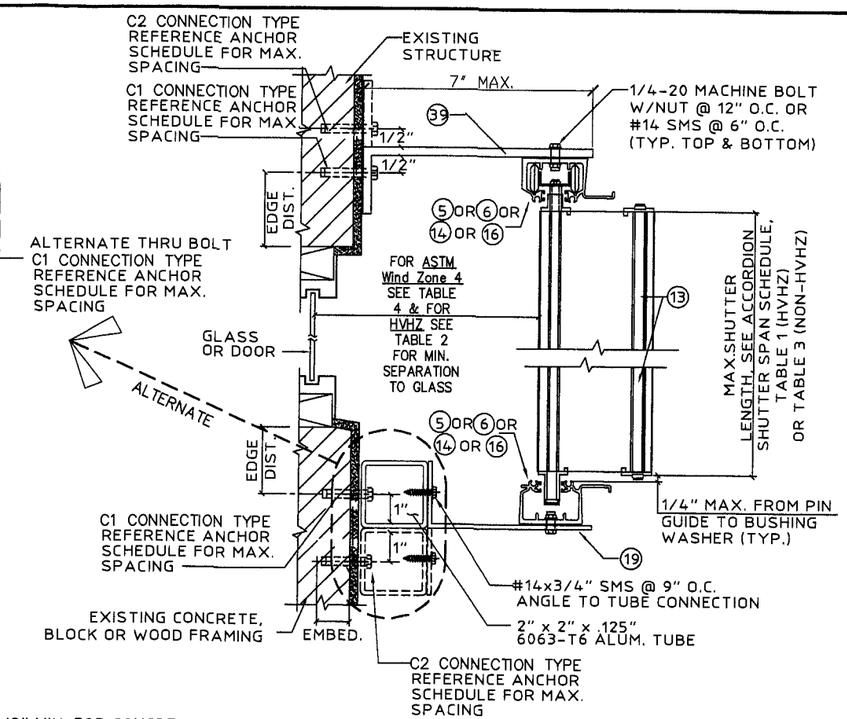

Cb ALTERNATE BUILD OUT MOUNT SECTION
SCALE: 3"= 1'- 0"

TABLE B (CC4)		
PRESSURE VS ALLOWABLE LENGTH		
PSF	2"x2"x1/8" WITH B/O	3"x3"x1/8" WITH B/O
62	8'-3"	12'-4"
72	7'-10"	11'-9"
82	7'-6"	11'-3"
92	7'-3"	10'-10"
102	7'-0"	10'-5"
120	6'-7"	9'-11"
150	6'-2"	9'-2"
200	5'-7"	8'-4"

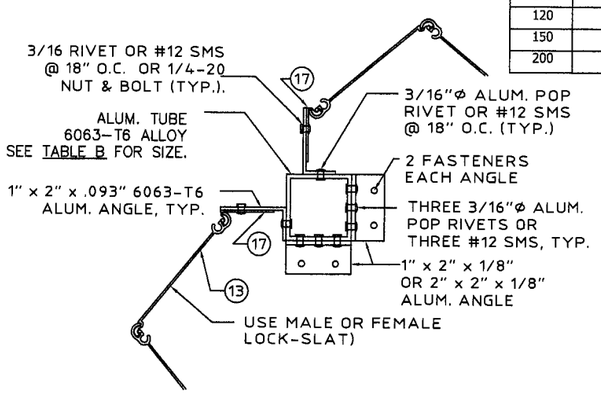

CC4 TYPICAL CORNER CLOSURE DETAILS
NTS

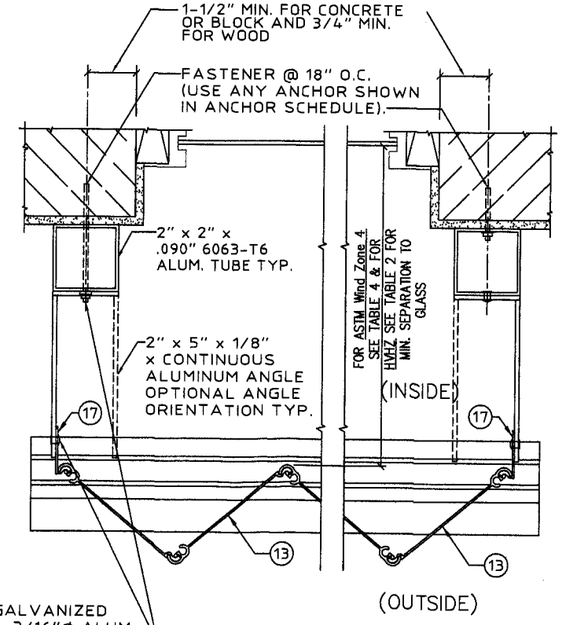

SIDE CLOSURE OPTIONS
SCALE: 3" = 1'-0"

Approved as complying with the Florida Building Code
Date 11/27/2008
NOA# 08-0620.07
Miami Dade Product Control Division
By

KNEZEVICH ASSOCIATES
Consulting Engineers
2590 S.W. 105th Terrace • Davie, Florida 33324
T (954) 821-6933 • F (954) 452-7960 • COA 27989
website: www.Knezevich.com • email: VJK@Knezevich.com

Copyright © 2008 V.J.Knezevich & Associates, LLC d/b/a Knezevich Associates

MAXIMUM IMPACT 6.8 ACCORDION
METALTECH, INC.
7326 W. BROWARD BLVD. PLANTATION, FL. 33314
EST. 1987

revisions			
no	date	by	description

V.J. Knezevich
Professional Engineer
FL License No.: PE 0010983
FLORIDA COA No.: 27989

Oct 20, 2008

drawn by	scale
wbs	AS NOTED

date 10/20/2008

project no. 08-226

6.8 ACCORDION SHUTTER

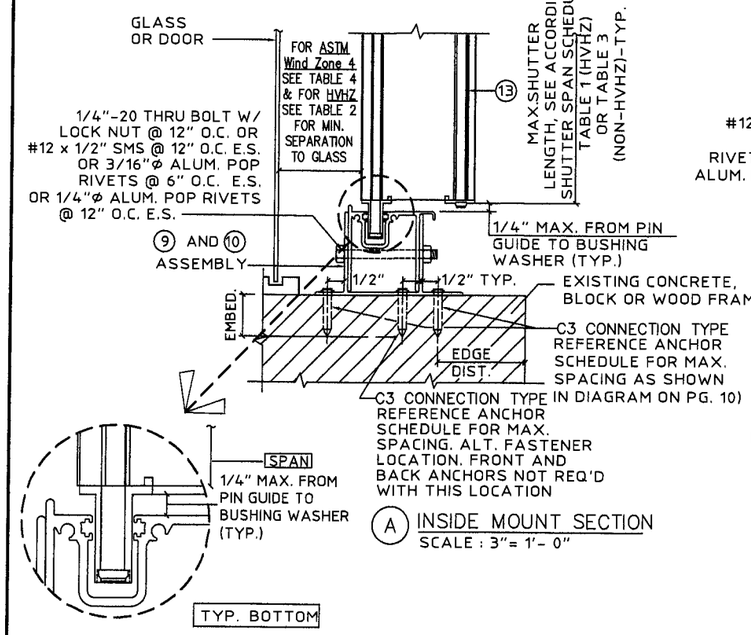

A INSIDE MOUNT SECTION
SCALE : 3"= 1'- 0"

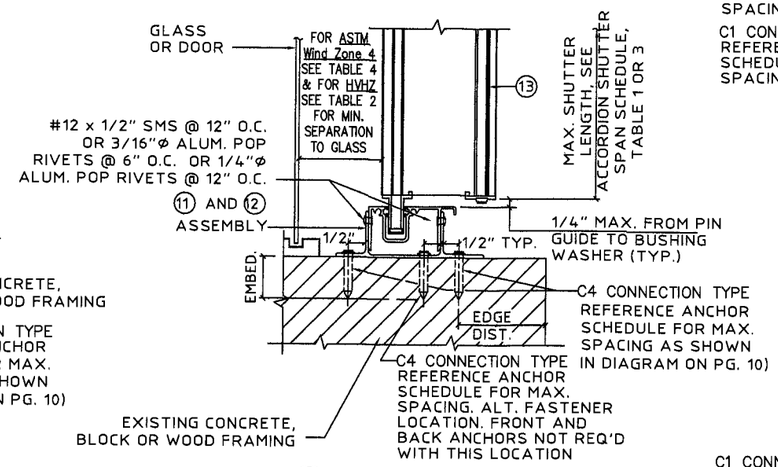

B INSIDE MOUNT SECTION
SCALE : 3"= 1'- 0"

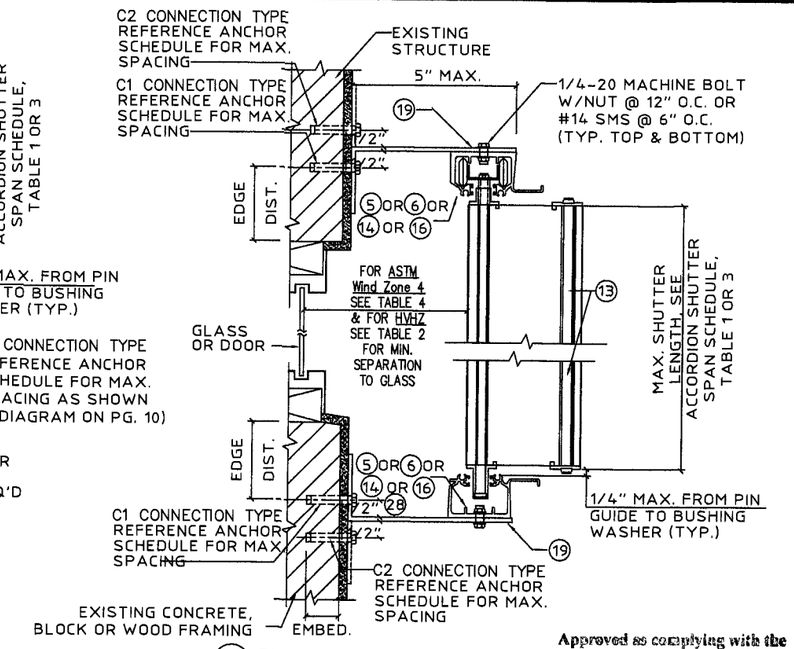

Ca BUILD OUT MOUNT SECTION
SCALE : 3"= 1'- 0"

Approved as complying with the Florida Building Code
Date 11/27/2008
NOA# 08-0620.07
Miami Dade Product Control Division
By

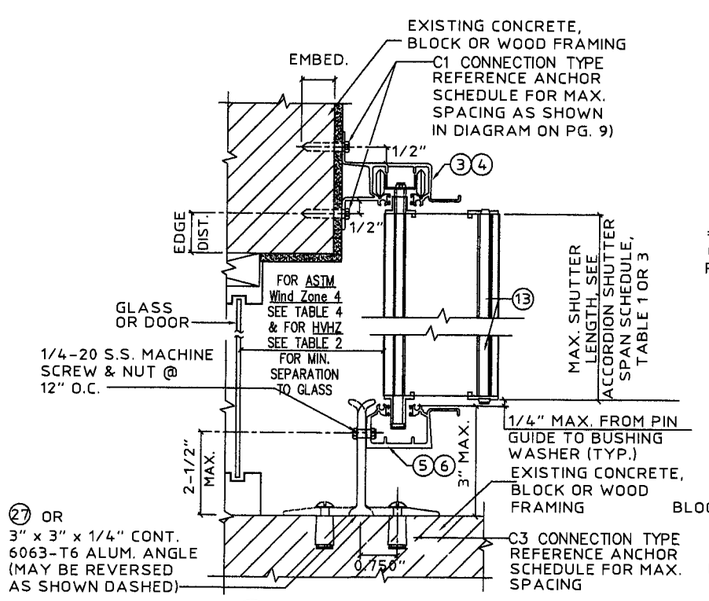

D WALL MOUNT SECTION
SCALE : 3"= 1'- 0"

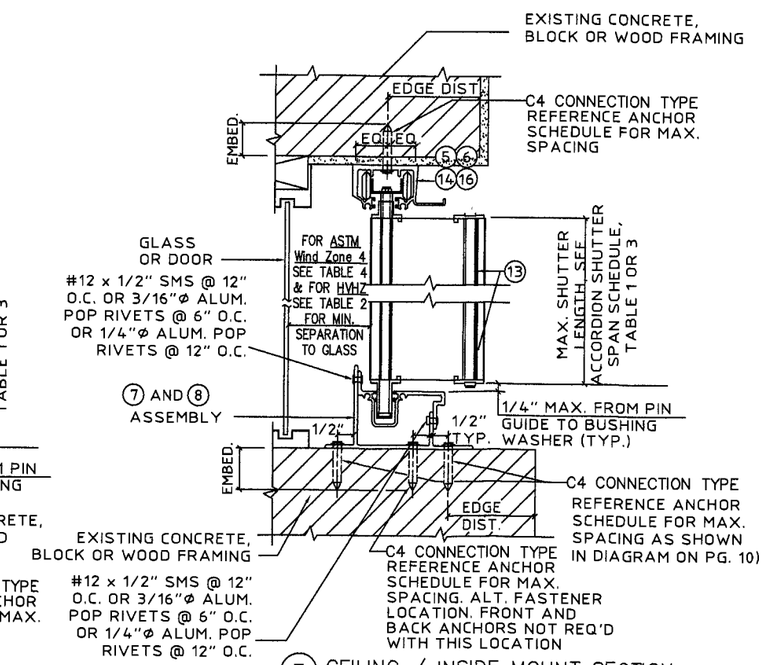

E CEILING / INSIDE MOUNT SECTION
SCALE : 3"= 1'- 0"

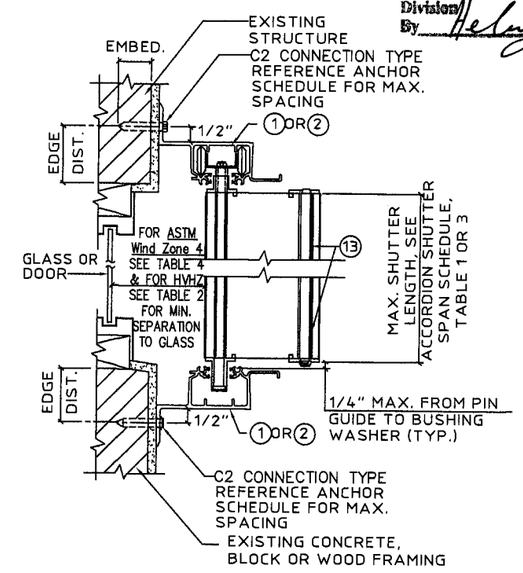

F WALL/BUILD OUT SECTION
SCALE : 3"= 1'- 0"

KNEZEVICH ASSOCIATES
Consulting Engineers
2590 S.W. 105th Terrace * Davie, Florida 33324
T (954) 821-6933 * F (954) 452-7960 * COA 27989
website: www.Knezevich.com * email: VJK@knezevich.com

Copyright ©2008 V.J.Knezevich & Associates, LLC d/b/a Knezevich Associates

MAXIMUM IMPACT 6.8 ACCORDION
METALTECH, INC.
EST. 1967 7836 W. SECOND CT. HIALEAH, FL 33014

revisions			
no	date	by	description

V.J. Knezevich
Professional Engineer
FL License No.: PE 0010983
FLORIDA COA No.: 27989

Oct 20 2008

drawn by	scale
wbs	AS NOTED

date 10/20/2008

project no. 08-226

6.8 ACCORDION SHUTTER

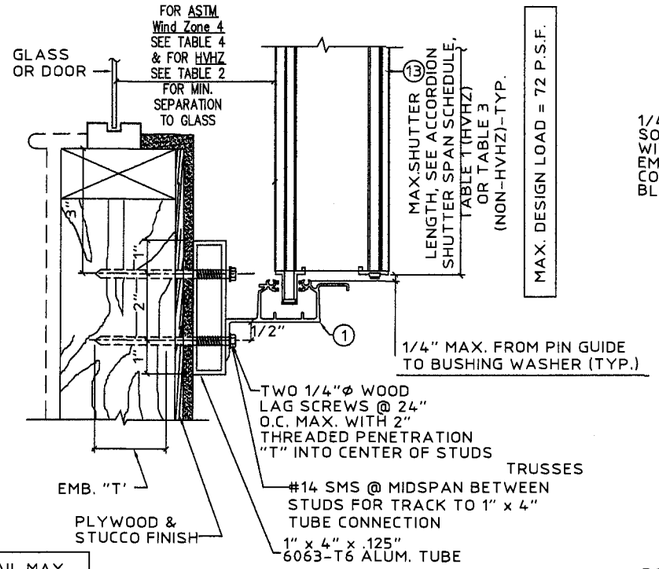

G WALL MOUNT SECTION
SCALE : 3"= 1'- 0"

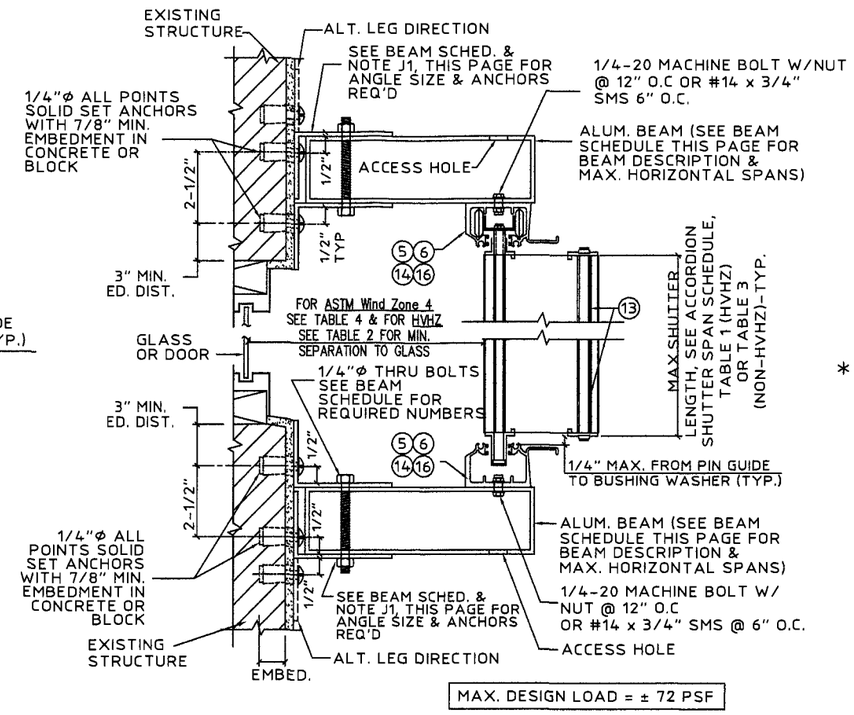

J BEAM SPAN SECTION
SCALE : 3"= 1'- 0"

* BOX BEAM SCHEDULE

BOX BEAM	SHUTTER SPAN	TOP BEAM	BOT. BEAM	# OF THRU BOLT		# OF 1/4" ALL POINT ANCHORS EA. ANGLE		LENGTH ANGLE REQ	
				TOP BEAM	BOT. BEAM	TOP BEAM	BOT. BEAM	TOP BEAM	BOT. BEAM
2" x 5" 0.125"	5'-0"	9'-0"	9'-6"	2	2	2	2	6"	6"
	8'-0"	8'-0"	8'-1"	2	2	3	3	9"	9"
	10'-3"	7'-7"	7'-5"	2	2	3	3	9"	9"
2" x 6" 0.125"	5'-0"	9'-5"	11'-1"	2	2	2	2	6"	6"
	8'-0"	8'-6"	9'-6"	2	2	3	3	9"	9"
	10'-3"	7'-10"	8'-6"	2	2	3	3	9"	9"
2" x 8" 0.125"	5'-0"	10'-1"	14'-3"	2	2	2	3	9"	9"
	8'-0"	9'-0"	11'-10"	2	2	3	4	9"	12"
	10'-3"	8'-5"	10'-6"	2	3	3	4	9"	12"
2" x 10" 0.1875"	5'-0"	11'-7"	19'-8"	2	3	2	4	9"	12"
	8'-0"	10'-3"	16'-8"	2	3	3	5	9"	15"
	10'-3"	9'-9"	14'-10"	3	4	4	5	12"	15"

* USE 2X3X1/4 OR 2X5X1/4 ANGLES FOR 2X5 & 2X6 BEAMS
USE 2X5X1/4 ANGLES FOR 2X8 & 2X10 BEAMS

BEAM SCHEDULE NOTES:

J1. USE BEAM SCHEDULE FOR DETAIL J .
J2. TOP & BOTTOM BEAMS MAY BE USED TOGETHER OR IN COMBINATION WITH OTHER CONNECTION DETAILS. WHERE USED TOGETHER, BEAM MUST BE LIMITED TO TOP BEAM SPANS.
J3 LAP BEAMS ARE NOT ALLOWED.
J4 ALL BEAMS & ANGLES TO BE 6063-T6 ALLOY.

Approved as complying with the Florida Building Code
Date 11/27/2008
NOA# 08-0620.07
Miami Dade Product Control Division
By

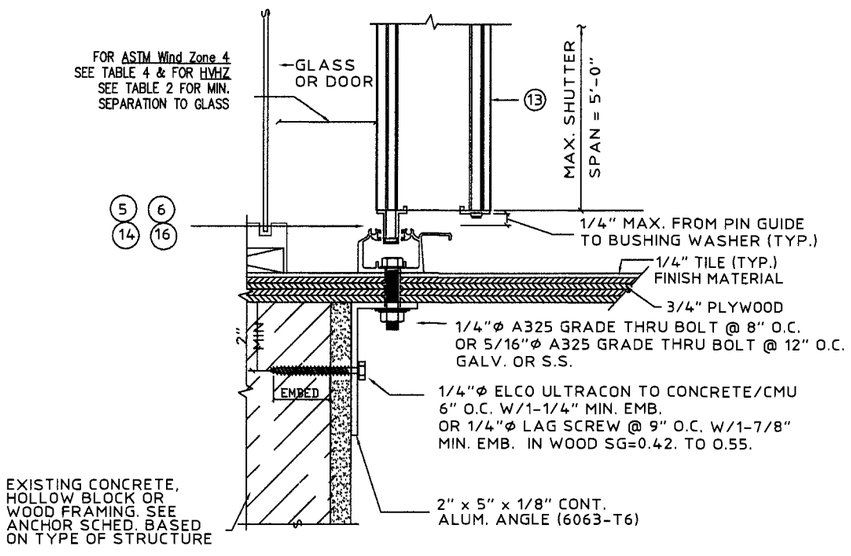

H PASS THRU DETAIL
SCALE : 3"= 1'- 0"

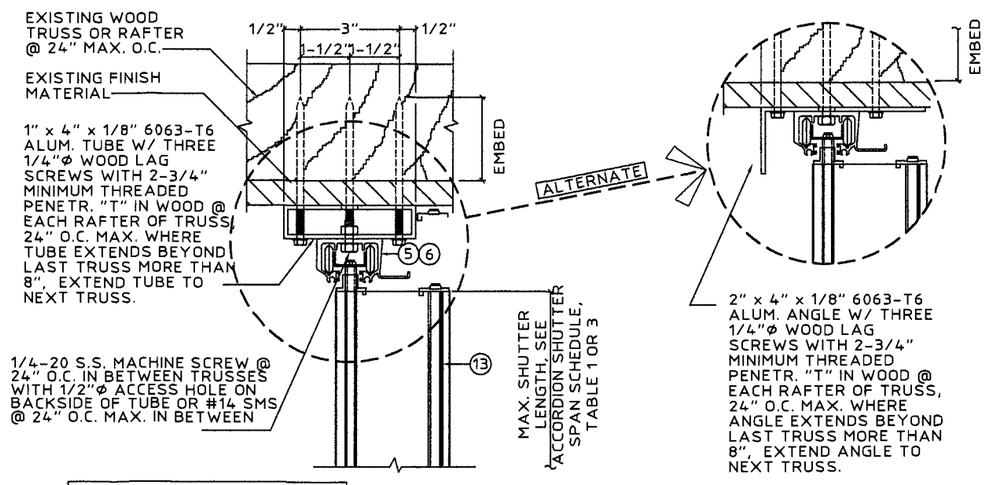

K TRUSS MOUNT SECTION
SCALE : 3"= 1'- 0"

KNEZEVICH ASSOCIATES
Consulting Engineers
2590 S.W. 103th Terrace Davie, Florida 33324
T (954) 821-6033 F (954) 452-9900 COA# 27989
website: www.knezevich.com email: VJK@knezevich.com

Copyright ©2008 VJKnezevich & Associates, LLC d/b/a Knezevich Associates

MAXIMUM IMPACT 6.8 ACCORDION
METALTECH, INC.
7838 W. SECOND CT. HIALEAH, FL. 33014
EST. 1957

revisions

no	date	by	description

V.J. Knezevich
Professional Engineer
FL License No.: PE 0010983
FLORIDA COA No: 27989
Oct 20 2008

drawn by wbs | scale AS NOTED
date 10/20/2008
project no. 08-226

6.8 ACCORDION SHUTTER

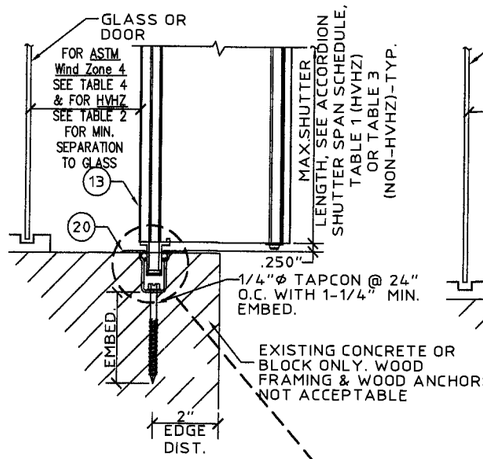

M RECESS SILL DETAIL
SCALE : 3"= 1'- 0"

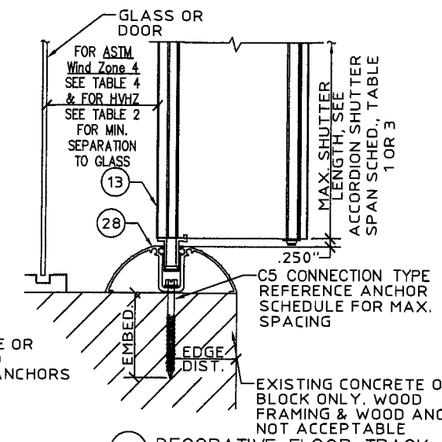

N DECORATIVE FLOOR TRACK DETAIL
SCALE : 3"= 1'- 0"

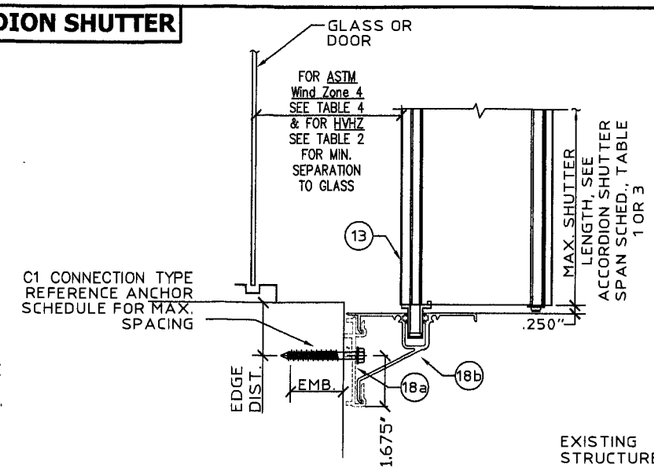

O WALL MOUNT SILL DETAIL
SCALE : 3"= 1'- 0"

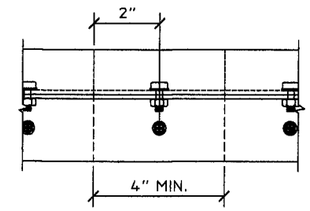

RADIUS HEADER MOUNTED PARTIAL ELEVATION
SCALE: 3" = 1'-0"

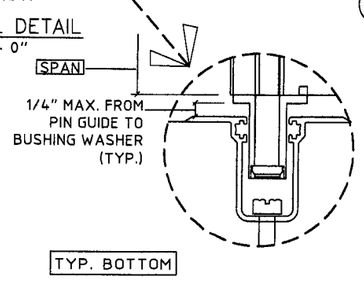

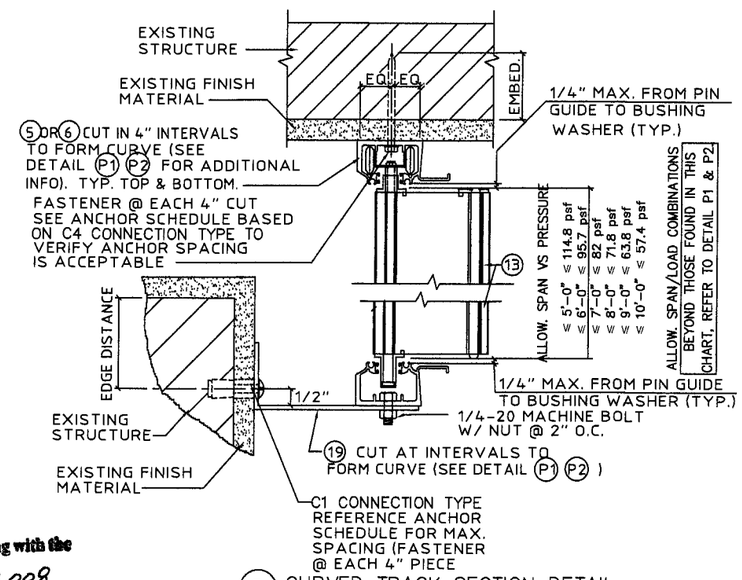

P CURVED TRACK SECTION DETAIL
SCALE : 3"= 1'- 0"

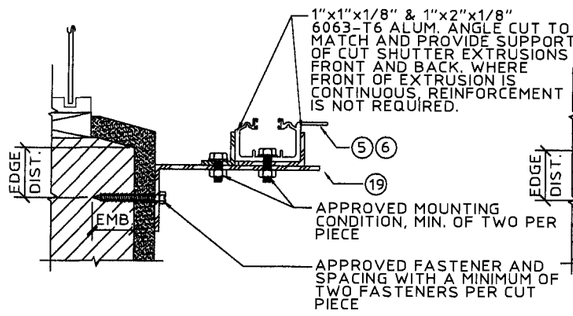

P1 TYP. SECTION FOR SHUTTERS
SCALE: 3" = 1'-0"

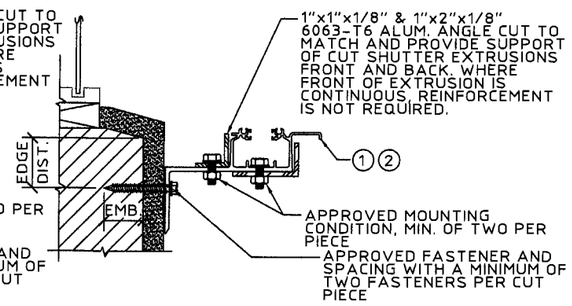

P2 TYP. ALTERNATE SECTION FOR SHUTTERS
SCALE: 3" = 1'-0"

Approved as complying with the Florida Building Code
Date 11/27/2008
NOA# 08-0620.07
Miami Dade Product Control Division
By

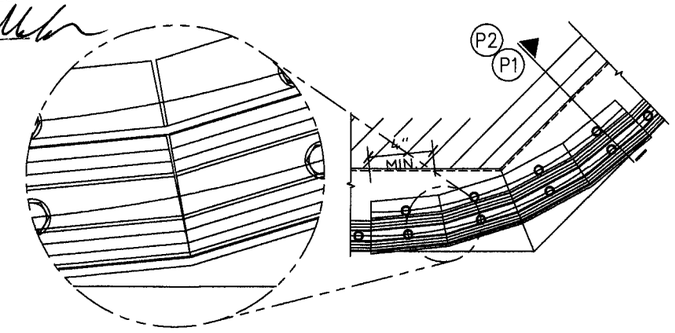

KNEZEVICH ASSOCIATES
Consulting Engineers
2590 S.W. 105th Terrace * Davie, Florida 33324
T (954) 821-6933 * F (954) 452-7980 * COA 27989
website: www.knezevich.com * email: VJK@knezevich.com

Copyright ©2008 V.Knezevich & Associates, LLC d/b/a Knezevich Associates

MAXIMUM IMPACT 6.8 ACCORDION
METALTECH, INC.
EST. 1957 7838 W. SECOND CT. HIALEAH, FL. 33014

revisions

no	date	by	description

V.J. Knezevich
Professional Engineer
FL License No.: PE-0010983
FLORIDA COA No: 27989

Oct 20, 2008

drawn by	scale
wbs	AS NOTED

date 10/20/2008

project no. 08-226

6.8 ACCORDION SHUTTER

ANCHOR SCHEDULE FOR CONCRETE

MAXIMUM FASTENER SPACING (INCHES) REQUIRED FOR VARIOUS DESIGN LOADS AND SPANS

ANCHOR TYPE & MINIMUM CONCRETE REQUIREMENTS	LOAD (W) P.S.F. MAX. (SEE NOTE 1)	MIN. 1" EDGE DISTANCE															MIN. 2-1/2" EDGE DISTANCE														
		SPANS UP TO 6'-0" (SEE NOTE 1)					SPANS UP TO 8'-8" (SEE NOTE 1)					SPANS UP TO 13'-0" (SEE NOTE 1)					SPANS UP TO 6'-0" (SEE NOTE 1)					SPANS UP TO 8'-8" (SEE NOTE 1)					SPANS UP TO 13'-0" (SEE NOTE 1)				
		CONNECTION TYPE (SEE NOTE 3)					CONNECTION TYPE (SEE NOTE 3)					CONNECTION TYPE (SEE NOTE 3)					CONNECTION TYPE (SEE NOTE 3)					CONNECTION TYPE (SEE NOTE 3)					CONNECTION TYPE (SEE NOTE 3)				
		C1	C2	C3	C4	C5	C1	C2	C3	C4	C5	C1	C2	C3	C4	C5	C1	C2	C3	C4	C5	C1	C2	C3	C4	C5	C1	C2	C3	C4	C5
1/4"ø ITW TAPCON WITH 1-3/4" MIN. EMBEDMENT	48.0	16	16	6	7	8	16	16	4	5	5	16	16	3	3	3	16	16	13	16	16	16	16	9	12	15	16	16	6	8	10
	62.0	16	16	5	5	6	16	16	3	4	4	15	9			3	16	16	10	14	16	16	16	7	9	12	16	10	4	6	8
	72.0	16	16	4	5	5	16	16	3	3	3	13	6				16	16	8	12	15	16	16	6	8	10	14	7	4	5	7
	110.0	16	16		3	3	12	6				11	4				16	16	5	7	10	14	6	4	5	6	12	4	3	4	5
	200.0	11	4				11	4				11	4				12	4	3	4	6	12	4	3	4	5	12	4	3	4	5
1/4"ø ELCO ULTRACON WITH 1-3/4" MIN. EMBEDMENT	48.0	16	16	9	12	14	16	16	6	8	10	16	16	4	5	8	16	16	12	16	16	16	16	8	12	16	16	16	5	8	11
	62.0	16	16	7	9	11	16	16	5	6	7	13	8	3	4	5	16	16	9	13	16	16	16	6	9	12	14	8	4	6	8
	72.0	16	16	6	8	9	16	16	4	5	6	11	5		3	4	16	16	8	11	15	16	16	5	8	11	12	5	3	5	7
	110.0	16	16	4	5	6	11	5		3	4	9	3		3	3	16	16	5	7	10	11	5	3	5	7	10	4	3	4	6
	200.0	9	3		3	3	9	3		3	3	9	3		3	3	10	4	3	4	6	10	4	3	4	6	10	4	3	4	6
1/4"ø ELCO CRETE FLEX SS4 WITH 2" MIN. EMBEDMENT	48.0																16	16	16	16	16	16	16	12	16	16	16	16	8	11	16
	62.0																16	16	13	16	16	16	16	9	13	16	16	11	6	9	12
	72.0																16	16	11	16	16	16	16	8	11	16	16	7	5	7	10
	110.0																16	16	7	11	15	15	7	5	7	10	13	5	4	6	8
	200.0																13	5	4	6	8	13	5	4	6	8	13	5	4	6	8

ANCHOR TYPE & MINIMUM CONCRETE REQUIREMENTS	LOAD (W) P.S.F. MAX. (SEE NOTE 1)	MIN. 1-1/4" EDGE DISTANCE															MIN. 3" EDGE DISTANCE														
		C1	C2	C3	C4	C5	C1	C2	C3	C4	C5	C1	C2	C3	C4	C5	C1	C2	C3	C4	C5	C1	C2	C3	C4	C5	C1	C2	C3	C4	C5
* 1/4"ø ALL POINTS SOLID-SET ANCHOR WITH 7/8" EMBEDMENT & 1/4-20 STAINLESS STEEL MACHINE SCREW	48.0	16	16	7	9	11	16	16	4	6	8	12	12	3	4	5	16	16	14	16	16	16	16	10	14	16	16	16	6	9	13
	62.0	16	16	5	7	9	14	14	3	5	6	9	5		3	4	16	16	11	16	16	16	16	8	11	15	16	9	5	7	10
	72.0	16	16	4	6	7	12	12	3	4	5	8	4			3	16	16	9	14	16	16	16	6	9	13	13	6	4	6	9
	110.0	11	11	3	4	5	8	3			3	7				3	16	16	6	9	12	13	6	4	6	8	11	4	3	5	7
	200.0	7				3	7				3	7				3	11	4	3	5	7	11	4	3	5	7	11	4	3	5	7

ANCHOR TYPE & MINIMUM CONCRETE REQUIREMENTS	LOAD (W) P.S.F. MAX. (SEE NOTE 1)	MIN. 2-5/8" EDGE DISTANCE															MIN. 5-1/4" EDGE DISTANCE														
		C1	C2	C3	C4	C5	C1	C2	C3	C4	C5	C1	C2	C3	C4	C5	C1	C2	C3	C4	C5	C1	C2	C3	C4	C5	C1	C2	C3	C4	C5
3/8"ø POWERS DROP-IN & 3/8-16 STAINLESS STEEL BOLT WITH 1-5/8" MIN. EMBEDMENT	48.0	16	16	16	16	16	16	16	12	16	16	16	16	8	11	15	16	16	16	16	16	16	16	16	16	16	16	16	11	16	16
	62.0	16	16	13	16	16	16	16	9	13	16	16	12	6	8	11	16	16	16	16	16	16	16	12	16	16	16	14	8	12	16
	72.0	16	16	11	16	16	16	16	8	11	15	16	8	5	7	10	16	16	16	16	16	16	16	11	16	16	16	9	7	11	15
	110.0	16	16	7	10	14	16	8	5	7	9	15	6	4	6	8	16	16	10	15	16	16	9	7	10	15	16	6	6	9	13
	200.0	15	6	4	6	8	15	6	4	6	8	15	6	4	6	8	16	6	6	9	13	16	6	6	9	13	16	6	6	9	13

ANCHOR TYPE & MINIMUM CONCRETE REQUIREMENTS	LOAD (W) P.S.F. MAX. (SEE NOTE 1)	MIN. 2-3/16" EDGE DISTANCE															MIN. 3-1/8" EDGE DISTANCE														
		C1	C2	C3	C4	C5	C1	C2	C3	C4	C5	C1	C2	C3	C4	C5	C1	C2	C3	C4	C5	C1	C2	C3	C4	C5	C1	C2	C3	C4	C5
5/16"ø ITW BUILDEX TAPCON XL WITH 1-3/4" MIN. EMBEDMENT	48.0	16	16	15	16	16	16	16	10	15	16	16	16	7	14	14	16	16	15	16	16	16	16	10	15	16	16	16	7	10	14
	62.0	16	16	11	16	16	16	16	8	12	16	16	9	5	8	11	16	16	12	16	16	16	16	8	12	16	16	10	5	8	11
	72.0	16	16	10	15	16	16	16	7	10	14	13	6	4	6	9	16	16	10	15	16	16	16	7	10	14	14	6	4	7	9
	110.0	16	16	6	9	13	13	6	4	6	9	11	4	3	5	8	16	16	6	10	13	14	6	4	6	9	12	4	4	5	8
	200.0	11	4	3	5	8	11	4	3	5	8	11	4	3	5	8	12	4	4	5	8	12	4	4	5	8	12	4	4	5	8
5/16"ø ELCO ULTRACON WITH 1-3/4" MIN. EMBEDMENT	48.0	16	16	16	16	16	16	16	12	16	16	16	16	8	12	16	16	16	16	16	16	16	16	13	16	16	16	16	8	13	16
	62.0	16	16	13	16	16	16	16	9	14	16	16	10	6	9	13	16	16	15	16	16	16	16	10	15	16	16	11	6	10	14
	72.0	16	16	11	16	16	16	16	8	12	16	15	7	5	8	11	16	16	12	16	16	16	16	8	13	16	16	8	5	8	12
	110.0	16	16	7	11	16	15	7	5	8	11	12	5	4	6	9	16	16	8	12	16	16	7	5	8	12	14	5	5	7	10
	200.0	12	5	4	6	9	12	5	4	6	9	12	5	4	6	9	14	5	5	7	10	14	5	5	7	10	14	5	5	7	10

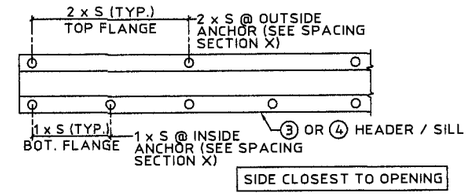

NOTE: "S" INDICATES ANCHOR SCHEDULE SPACING.

SPACING DIAGRAM FOR C1 CONNECTION TYPE:

- C1 CONNECTION TYPE USING PIECE 3 OR 4

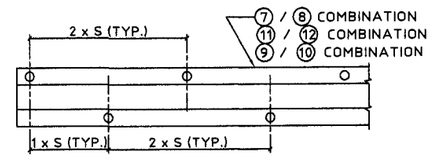

NOTE: "S" INDICATES ANCHOR SCHEDULE SPACING.

SPACING DIAGRAM FOR C3 & C4 CONNECTION TYPE:

- C3 CONNECTION TYPE USING PIECE ⑩ WITH OUTSIDE ANCHORS ONLY
- C4 CONNECTION TYPE USING PIECE ⑧ OR ⑫ WITH OUTSIDE ANCHORS ONLY

ANCHOR NOTES:

1. SPANS AND LOADS SHOWN HERE ARE FOR DETERMINING ANCHOR SPACING ONLY. ALLOWABLE STORM SHUTTER SPANS FOR SPECIFIC LOADS MUST BE LIMITED TO THOSE SHOWN IN TABLE 1 & 3 (Pg 1).
2. ENTER ANCHOR SCHEDULE BASED ON THE EXISTING STRUCTURE MATERIAL, ANCHOR TYPE AND EDGE DISTANCE. SELECT DESIGN LOAD GREATER THAN OR EQUAL TO NEGATIVE DESIGN LOAD ON SHUTTER AND SELECT SPAN GREATER THAN OR EQUAL TO SHUTTER SPAN.
3. SEE MOUNTING SECTION DETAILS FOR IDENTIFICATION OF CONNECTION TYPE.
4. EXISTING STRUCTURE MAY BE CONCRETE, ASTM C-90 HOLLOW CONCRETE BLOCK OR WOOD FRAMING. REFERENCE ANCHOR SCHEDULE FOR PROPER ANCHOR TYPE BASED ON TYPE OF EXISTING STRUCTURE AND APPROPRIATE CONNECTION TYPE. SEE CONNECTION DETAILS FOR IDENTIFICATION OF CONNECTION TYPE.
5. THE CONTRACTOR IS RESPONSIBLE TO ENSURE THE ANCHORS ARE INSTALLED IN ACCORDANCE WITH MANUFACTURERS' RECOMMENDATIONS. EMBEDMENT LENGTHS SHALL BE AS NOTED AND DO NOT INCLUDE STUCCO OR OTHER FINISHES.
6. WHERE EXISTING STRUCTURE IS WOOD FRAMING, WOOD FRAMING CONDITIONS VARY. FIELD VERIFY THAT FASTENERS ARE INTO ADEQUATE WOOD FRAMING MEMBERS, NOT PLYWOOD. FASTENING TO PLYWOOD IS ACCEPTABLE ONLY FOR SIDE CLOSURE PIECES.
7. WHERE LAG SCREWS FASTEN TO NARROW FACE OF STUD FRAMING, FASTENER SHALL BE LOCATED IN CENTER OF NOMINAL 2" x 4" (MIN.) WOOD STUD. 3/4" EDGE DISTANCE IS ACCEPTABLE FOR WOOD FRAMING. LAG SCREWS SHALL HAVE PHILLIPS PAN HEAD OR HEX HEAD.
8. MACHINE SCREWS SHALL HAVE MINIMUM OF 1/2" ENGAGEMENT OF THREADS IN BASE ANCHOR AND MAY HAVE EITHER A PAN HEAD, TRUSS HEAD, OR WAFER HEAD (SIDEWALK BOLT), U.O.N.

▨ DESIGNATES ANCHOR CONDITIONS WHICH ARE NOT ACCEPTABLE USES.

* DESIGNATES ANCHORS WHICH ARE REMOVABLE BY REMOVING MACHINE SCREW, NUT OR WASHER WINGNUT.

9. FOR 5/16"ø ELCO CRETE FLEX, CONCRETE f'c=3.35 KSI, FOR ELCO ULTRACON, CONCRETE f'c=3.5 KSI, FOR ITW TAPCON, CONCRETE f'c=3.2 KSI, OTHERWISE MIN. f'c <= 3 KSI.

Approved as complying with the Florida Building Code
Date 11/27/2008
NOA# 08-0620.07
Miami Dade Product Control Division
By

KNEZEVICH ASSOCIATES
Consulting Engineers
2590 S.W. 105th Terrace • Davie, Florida 33324
T (954) 821-6933 • F (954) 452-7960 • COA 27989
website: www.Knezevich.com • email: VJK@Knezevich.com

Copyright © 2008 VJKnezevich & Associates, LLC d/b/a Knezevich Associates

MAXIMUM IMPACT 6.8 ACCORDION

METALTECH, INC.
7838 W. SECOND CT. HIALEAH, FL. 33014
EST. 1957

revisions			
no	date	by	description

V.J. Knezevich
Professional Engineer
FL License No.: PE-0010983
FLORIDA COA No.: 27989

Oct 20, 2008

drawn by wbs | scale AS NOTED

date 10/20/2008

project no. 08-226

6.8 ACCORDION SHUTTER

ANCHOR SCHEDULE FOR CONCRETE BLOCK

MAXIMUM FASTENER SPACING (INCHES) REQUIRED FOR VARIOUS DESIGN LOADS AND SPANS

ANCHOR TYPE & MINIMUM BLOCK REQUIREMENTS	LOAD (W) P.S.F. MAX. (SEE NOTE 1)	MIN. 1" EDGE DISTANCE														
		SPANS UP TO 6'-0" (SEE NOTE 1) CONNECTION TYPE (SEE NOTE 3)					SPANS UP TO 8'-8" (SEE NOTE 1) CONNECTION TYPE (SEE NOTE 3)					SPANS UP TO 13'-0" (SEE NOTE 1) CONNECTION TYPE (SEE NOTE 3)				
		C1	C2	C3	C4	C5	C1	C2	C3	C4	C5	C1	C2	C3	C4	C5
1/4"⌀ ITW TAPCON WITH 1-1/4" MIN. EMBEDMENT	48.0	7	7		3	4	5	5			3	3	3			
	62.0	5	5			3	4	4								
	72.0	5	5			3	3	3								
	110.0	3	3													
	200.0															
1/4"⌀ ELCO ULTRACON WITH 1-1/4" MIN. EMBEDMENT	48.0	14	14	4	6	9	10	10	3	4	6	6	6		3	4
	62.0	11	11	3	5	7	7	7		3	4	5	3			3
	72.0	9	9	3	4	6	6	6		3	4	4				
	110.0	6	6			4	4					3				
	200.0	3					3					3				
		MIN. 1-1/4" EDGE DISTANCE														
		C1	C2	C3	C4	C5	C1	C2	C3	C4	C5	C1	C2	C3	C4	C5
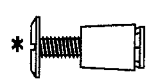 1/4"⌀ ALL POINTS SOLID-SET ANCHOR WITH 7/8" EMBEDMENT & 1/4-20 STAINLESS STEEL MACHINE SCREW	48.0	16	16	5	6	8	12	12	3	4	6	8	8		3	4
	62.0	13	13	3	5	6	9	9		3	4	6	3			3
	72.0	11	11	3	4	5	7	7		3	4	5				
	110.0	7	7		3	3	5					4				
	200.0	4					4					4				
		MIN. 3" EDGE DISTANCE														
		C1	C2	C3	C4	C5	C1	C2	C3	C4	C5	C1	C2	C3	C4	C5
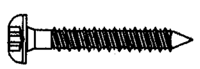 5/16"⌀ ITW BUILDEX TAPCON XL WITH 1-1/4" MIN. EMBEDMENT	48.0															
	62.0															
	72.0															
	110.0															
	200.0															
		MIN. 1-9/16" EDGE DISTANCE														
		C1	C2	C3	C4	C5	C1	C2	C3	C4	C5	C1	C2	C3	C4	C5
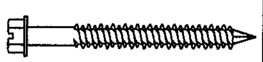 5/16"⌀ ELCO ULTRACON WITH 1-1/4" MIN. EMBEDMENT	48.0	16	16	6	8	10	14	14	4	5	7	9	9		3	4
	62.0	16	16	4	6	8	11	11	3	4	5	7	4			3
	72.0	14	14	4	5	6	9	9		3	4	6	3			3
	110.0	9	9		3	4	6				3	5				
	200.0	5					5					5				

ANCHOR TYPE & MINIMUM BLOCK REQUIREMENTS	LOAD (W) P.S.F. MAX. (SEE NOTE 1)	MIN. 2-1/2" EDGE DISTANCE														
		SPANS UP TO 6'-0" (SEE NOTE 1) CONNECTION TYPE (SEE NOTE 3)					SPANS UP TO 8'-8" (SEE NOTE 1) CONNECTION TYPE (SEE NOTE 3)					SPANS UP TO 13'-0" (SEE NOTE 1) CONNECTION TYPE (SEE NOTE 3)				
		C1	C2	C3	C4	C5	C1	C2	C3	C4	C5	C1	C2	C3	C4	C5
1/4"⌀ ITW TAPCON WITH 1-1/4" MIN. EMBEDMENT	48.0	12	12	4	7	10	8	8	3	5	7	5	5		3	5
	62.0	9	9	3	5	8	6	6		3	5	4				3
	72.0	8	8	3	4	7	5	5		3	5	3				3
	110.0	5	5		3	4	3				3	3				
	200.0	3					3					3				
1/4"⌀ ELCO ULTRACON WITH 1-1/4" MIN. EMBEDMENT	48.0	14	14	5	9	13	10	10	3	6	9	6	6		4	6
	62.0	11	11	4	6	10	7	7	3	4	7	5	3		3	4
	72.0	9	9	3	6	9	6	6		4	6	4				4
	110.0	6	6		3	6	4				4	3				3
	200.0	3				3	3				3	3				3
		MIN. 2" EDGE DISTANCE														
		C1	C2	C3	C4	C5	C1	C2	C3	C4	C5	C1	C2	C3	C4	C5
1/4"⌀ ALL POINTS SOLID-SET ANCHOR WITH 7/8" EMBEDMENT & 1/4-20 STAINLESS STEEL MACHINE SCREW	48.0	16	16	8	11	14	16	16	5	8	10	13	13	3	5	6
	62.0	16	16	6	8	11	15	15	4	6	7	10	6	3	4	5
	72.0	16	16	5	7	9	13	13	3	5	6	9	4		3	4
	110.0	13	13	3	5	6	9	4		3	4	7	3			3
	200.0	7	3			3	7	3			3	7	3			3
		MIN. 4" EDGE DISTANCE														
		C1	C2	C3	C4	C5	C1	C2	C3	C4	C5	C1	C2	C3	C4	C5
5/16"⌀ ITW BUILDEX TAPCON XL WITH 1-1/4" MIN. EMBEDMENT	48.0	16	16	8	13	16	15	15	5	9	14	10	10	3	6	9
	62.0	16	16	6	10	16	11	11	4	7	11	7	4	3	4	7
	72.0	14	14	5	9	13	10	10	3	6	9	6	3		4	6
	110.0	9	9	3	5	9	6	3		4	6	5			3	5
	200.0	5			3	5	5			3	5	5			3	5
		MIN. 3-1/8" EDGE DISTANCE														
		C1	C2	C3	C4	C5	C1	C2	C3	C4	C5	C1	C2	C3	C4	C5
5/16"⌀ ELCO ULTRACON WITH 1-1/4" MIN. EMBEDMENT	48.0	16	16	8	12	16	16	16	5	8	12	11	11	3	5	8
	62.0	16	16	6	9	13	12	12	4	6	9	8	5		4	6
	72.0	15	15	5	8	11	10	10	3	5	8	7	3		3	5
	110.0	10	10	3	5	7	7	3		3	5	6			3	4
	200.0	6			3	4	6			3	4	6			3	4

ANCHOR NOTES:

SEE PAGE 10 of 11

ANCHOR SCHEDULE FOR WOOD SG = 0.55 MIN.

MAXIMUM FASTENER SPACING (INCHES) REQUIRED FOR VARIOUS DESIGN LOADS AND SPANS

ANCHOR TYPE & MINIMUM REQUIREMENTS	LOAD (W) P.S.F. MAX. (SEE NOTE 1)	MIN. 3/4" EDGE DISTANCE														
		SPANS UP TO 6'-0" (SEE NOTE 1) CONNECTION TYPE (SEE NOTE 3)					SPANS UP TO 8'-8" (SEE NOTE 1) CONNECTION TYPE (SEE NOTE 3)					SPANS UP TO 13'-0" (SEE NOTE 1) CONNECTION TYPE (SEE NOTE 3)				
		C1	C2	C3	C4	C5	C1	C2	C3	C4	C5	C1	C2	C3	C4	C5
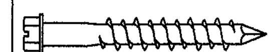 1/4"⌀ WOOD LAG WITH 1-3/4" MIN. THREAD PENETRATION PARALLEL OR PERP. TO WOOD GRAIN S.S. OR GALV. FINISHED	48.0	16	16	12	14	16	16	16	8	10	11	16	16	5	6	7
	62.0	16	16	9	11	12	16	16	6	7	8	16	13	4	5	5
	72.0	16	16	8	9	11	16	16	5	6	7	16	9	3	4	5
	110.0	16	16	5	6	7	16	9	3	4	5	16	6	3	3	4
	200.0	16	6	3	3	4	16	6	3	3	4	16	6	3	3	4
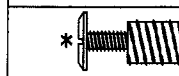 7/16"⌀ WOOD BUSHING WITH 7/8" MIN. EMBED. & 1/4-20 STAINLESS STEEL MACHINE SCREW	48.0	16	16				11	11				7	7			
	62.0	13	13				9	9				6	3			
	72.0	11	11				7	7				5				
	110.0	7	7				5					4				
	200.0	4					4					4				
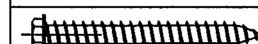 1/4"⌀ (#14) SMS OR 1/4"⌀ WOOD SCREW WITH 1-3/4" MIN. THREAD PENETRATION PARALLEL OR PERP. WOOD GRAIN S.S. OR GALV. FINISHED	48.0	16	16	11	15	16	16	16	8	10	12	16	16	5	7	8
	62.0	16	16	9	11	14	16	16	6	8	9	16	11	4	5	6
	72.0	16	16	7	10	12	16	16	5	7	8	15	7	3	4	5
	110.0	16	16	5	6	7	15	7	3	4	5	13	5	3	3	4
	200.0	13	5	3	3	4	13	5	3	3	4	13	5	3	3	4

ANCHOR SCHEDULE FOR WOOD SG = 0.42 MIN.

MAXIMUM FASTENER SPACING (INCHES) REQUIRED FOR VARIOUS DESIGN LOADS AND SPANS

ANCHOR TYPE & MINIMUM REQUIREMENTS	LOAD (W) P.S.F. MAX. (SEE NOTE 1)	MIN. 3/4" EDGE DISTANCE														
		SPANS UP TO 6'-0" (SEE NOTE 1) CONNECTION TYPE (SEE NOTE 3)					SPANS UP TO 8'-8" (SEE NOTE 1) CONNECTION TYPE (SEE NOTE 3)					SPANS UP TO 13'-0" (SEE NOTE 1) CONNECTION TYPE (SEE NOTE 3)				
		C1	C2	C3	C4	C5	C1	C2	C3	C4	C5	C1	C2	C3	C4	C5
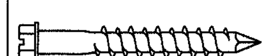 1/4"⌀ WOOD LAG WITH 1-3/4" MIN. THREAD PENETRATION PARALLEL OR PERP. TO WOOD GRAIN S.S. OR GALV. FINISHED	48.0	16	16	9	11	13	16	16	6	8	9	16	16	4	5	6
	62.0	16	16	7	9	10	16	16	5	6	7	15	9	3	4	4
	72.0	16	16	6	7	9	16	16	4	5	6	13	6		3	4
	110.0	16	16	4	5	6	12	6		3	4	10	4		3	3
	200.0	10	4		3	3	10	4		3	3	10	4		3	3
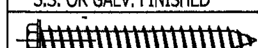 1/4"⌀ (#14) SMS OR 1/4"⌀ WOOD SCREW WITH 1-3/4" MIN. THREAD PENETRATION PARALLEL OR PERP. TO WOOD GRAIN S.S. OR GALV. FINISHED	48.0	16	16	8	10	13	16	16	5	7	9	13	13	3	4	6
	62.0	16	16	6	8	10	15	15	4	5	7	10	6		3	4
	72.0	16	16	5	7	9	13	13	3	4	6	9	4		3	4
	110.0	12	12	3	4	5	8	4		3	4	7	3			3
	200.0	7	3			3	7	3			3	7	3			3

Approved as complying with the Florida Building Code
Date 11/27/2008
NOA# 08-0620.07
Miami Dade Product Control Division
By [signature]

KNEZEVICH ASSOCIATES
Consulting Engineers
2590 S.W. 105th Terrace * Davie, Florida 33324
T (954) 821-6933 * F (954) 452-7960 * COA 27989
website: www.Knezevich.com * email: VJK@Knezevich.com

Copyright ©2008 VJKnezevich & Associates, LLC d/b/a Knezevich Associates

MAXIMUM IMPACT 6.8 ACCORDION
METALTECH, INC.
EST. 1957 7536 W. SECOND CT. HIALEAH, FL 33014

revisions

no	date	by	description

V.J. Knezevich
Professional Engineer
FL License No.: PE 0010983
FLORIDA COA No.: 27989
Oct 20, 2008

drawn by wbs | scale AS NOTED
date 10/20/2008
project no. 08-226