MIAMI-DADE COUNTY
BUILDING CODE COMPLIANCE OFFICE (BCCO)
PRODUCT CONTROL DIVISION

MIAMI-DADE COUNTY, FLORIDA
METRO-DADE FLAGLER BUILDING

140 WEST FLAGLER STREET, SUITE 1603
MIAMI, FLORIDA 33130-1563
(305) 375-2901 FAX (305) 375-2908
www.miamidade.gov

NOTICE OF ACCEPTANCE (NOA)

Southern Metal Products, LLC
dba-All Broward Hurricane Panel
450 West McNab Road
Ft. Lauderdale, Florida 33309

SCOPE:

This NOA is being issued under the applicable rules and regulations governing the use of construction materials. The documentation submitted has been reviewed by Miami-Dade County Product Control Division and accepted by the Board of Rules and Appeals (BORA) to be used in Miami Dade County and other areas where allowed by the Authority Having Jurisdiction (AHJ).

This NOA shall not be valid after the expiration date stated below. The Miami-Dade County Product Control Division (In Miami Dade County) and/or the AHJ (in areas other than Miami Dade County) reserve the right to have this product or material tested for quality assurance purposes. If this product or material fails to perform in the accepted manner, the manufacturer will incur the expense of such testing and the AHJ may immediately revoke, modify, or suspend the use of such product or material within their jurisdiction. BORA reserves the right to revoke this acceptance, if it is determined by Miami-Dade County Product Control Division that this product or material fails to meet the requirements of the applicable building code.

This product is approved as described herein, and has been designed to comply with the High Velocity Hurricane Zone of the Florida Building Code.

DESCRIPTION: 0.038" (min.) Galvanized Steel Storm Panel Shutter

APPROVAL DOCUMENT: Drawing No. 08-02, titled " 20 GA. Steel Storm Panel ", sheets 1 through 10 of 10, prepared by Al-Farooq Corporation, dated February 14, 2008, last revision #A dated August 07, 2008, signed and sealed by Humayoun Farooq, P.E., on 08/12/2008, bearing Miami-Dade County Product Control Revision stamp with the Notice of Acceptance number and expiration date by the Miami-Dade County Product Control Division.

MISSILE IMPACT RATING: Large and Small Missile Impact

LABELING: Each panel shall bear a permanent label with the manufacturer's name or logo, city, state and the following statement: "Miami-Dade County Product Control Approved", unless otherwise noted herein.

RENEWAL of this NOA shall be considered after a renewal application has been filed and there has been no change in the applicable building code negatively affecting the performance of this product.

TERMINATION of this NOA will occur after the expiration date or if there has been a revision or change in the materials, use, and/or manufacture of the product or process. Misuse of this NOA as an endorsement of any product, for sales, advertising or any other purposes shall automatically terminate this NOA. Failure to comply with any section of this NOA shall be cause for termination and removal of NOA.

ADVERTISEMENT: The NOA number preceded by the words Miami-Dade County, Florida, and followed by the expiration date may be displayed in advertising literature. If any portion of the NOA is displayed, then it shall be done in its entirety.

INSPECTION: A copy of this entire NOA shall be provided to the user by the manufacturer or its distributors and shall be available for inspection at the job site at the request of the Building Official.

This NOA **revises & renews NOA # 05-1013.02** and consists of this page 1, evidence submitted pages E-1, E-2, E-3, & E-4 as well as approval document mentioned above.

The submitted documentation was reviewed by **Helmy A. Makar, P.E., M.S.**

MIAMI-DADE COUNTY APPROVED

Helmy A. Makar
10/30/2008

NOA No. 08-0630.01
Expiration Date: 07/31/2009
Approval Date: 10/30/2008

Southern Metal Products, LLC
dba-All Broward Hurricane Panel

NOTICE OF ACCEPTANCE: EVIDENCE SUBMITTED

1. EVIDENCE SUBMITTED UNDER PREVIOUS APPROVALS

A. DRAWINGS

1. *Drawing No. **95-701**, All Broward Hurricane Panel Co., 20 Ga.. Steel Storm Panels, Sheets 1 through 7 of 7, prepared by Knezevich & Associates, dated 1/30/96 with Revision No. 5, dated 6/27/97, signed and sealed by V.J. Knezevich, P.E.*

B. TESTS

1. *Test reports on 1) Uniform Static Air Pressure Test, SFBC PA 202-94, 2) Large Missile Impact Test, SFBC PA 201-94, 3) Cyclic Loading Test, per SFBC PA 203-94 along with installation diagram of 20 Ga.. galvanized steel storm panels, prepared by Construction Testing Corporation, Test Report No. CTC-96-002, dated February 8, 1996, signed and sealed by Christopher G. Tyson, P.E.*
2. *Test reports on 1) Uniform Static Air Pressure Test, SFBC PA 202-94, 2) Large Missile Impact Test, SFBC PA 201-94, 3) Cyclic Loading Test, per SFBC PA 203-94 along with installation diagram of additional mounting conditions for 20 Ga.. galvanized steel storm panels, prepared by Construction Testing Corporation, Test Report No. CTC-96-029, dated July 18, 1996, signed and sealed by Christopher G. Tyson, P.E.*

C. CALCULATIONS

1. *Comparative Analysis and Anchor analysis & 12 additional details, All Broward Hurricane Panel Co., dated February 22,1996, Pages 1 through 50, KA Drawing No. 95-701, prepared by Knezevich & Associates, Inc., signed and sealed by V.J. Knezevich, P.E.*
2. *Comparative Analysis and Anchor analysis & additional details, All Broward Hurricane Panel Co., dated August 5,1996, Pages 1 through 28, KA Drawing No. 95-701, prepared by Knezevich & Associates, Inc., signed and sealed by V.J. Knezevich, P.E.*
3. *Revised calculations, All Broward Hurricane Panel Co., dated June 27,1997, Pages 1 through 6, prepared by Knezevich & Associates, Inc., signed and sealed by V.J. Knezevich, P.E.*

D. MATERIAL CERTIFICATION

1. *Mill Certified Inspection Report issued by Bethlehem Steel Corp. dated 6/23/95 with chemical treatment and spec. for 20 Ga. grade 50 galvanized steel per ASTM A653-94.*
2. *Certified Tensile Test Report Number QCM 6AM-120, prepared by QC Metallurgical, Inc., dated January 22, 1996, tested as per ASTM E8-93, for steel storm panel sample #CTC-96-002, signed and sealed by Frank Grate, P.E.*

Helmy A. Makar, P.E., M.S.
Product Control Examiner
NOA No. 08-0630.01
Expiration Date: 07/31/2009
Approval Date: 10/30/2008

NOTICE OF ACCEPTANCE: EVIDENCE SUBMITTED

3. *Certified Tensile Test Report Number QCM 6GM-1844, prepared by QC Metallurgical, Inc., dated August 6, 1996, tested as per ASTM E8-93, for steel storm panel sample, signed and sealed by Frank Grate, P.E.*

2. EVIDENCE SUBMITTED UNDER APPROVAL 98-0120.01

A. DRAWINGS

1. *Drawing No. **95-701**, All Broward Hurricane Panel Co., 20 ga. Steel Storm Panels, sheets 1 through 7 of 7, prepared by Knezevich & Associates, dated 1/30/96 with Revision No. 7, dated 05/01/98, signed and sealed by V.J. Knezevich, P.E.*

B. TESTS

1. *Test reports on 1) Large Missile Impact Test, SFBC PA 201-94, 2) Cyclic Loading Test, per SFBC PA 203-94 along with installation diagram of 20 Ga.. galvanized steel storm panels, prepared by Construction Testing Corporation, Test Report No. CTC-96-061, dated November 22, 1997, signed and sealed by Yamil Kuri, P.E.*

C. CALCULATIONS

1. *Anchor calculations, All Broward Hurricane Panel Co., dated December 16,1997, Pages 1 through 6, KA Drawing No. 95-701, prepared by Knezevich & Associates, Inc., signed and sealed by V.J. Knezevich, P.E.*

D. MATERIAL CERTIFICATION

1. *Certified Tensile Test Report Number CTL-845C, prepared by Certified Testing Laboratories, dated December 1, 1997, tested as per ASTM E8-93, for steel storm panel sample #CTC-96-061, signed and sealed by Ramesh Patel, P.E.*

3. EVIDENCE SUBMITTED UNDER APPROVAL #98-0713.01

A. DRAWINGS

1. *Drawing No. **98-128**, All Broward Hurricane Panel Co., 20 ga. Steel Storm Panels, sheets 1 through 7 of 7, prepared by Knezevich & Associates, dated 06/23/98 with Revision No. 2, dated 10/20/98, signed and sealed by V.J. Knezevich, P.E.*

B. TESTS

1. *Test reports on 1) Large Missile Impact Test, SFBC PA 201-94, 2) Cyclic Loading Test, per SFBC PA 203-94 along with installation diagram of 20 Ga. galvanized steel storm panels, prepared by Construction Testing Corporation, Test Report No. CTC-98-020, dated May 27, 1998, signed and sealed by Christopher G. Tyson, P.E.*

Helmy A. Makar, P.E., M.S.
Product Control Examiner
NOA No. 08-0630.01
Expiration Date: 07/31/2009
Approval Date: 10/30/2008

NOTICE OF ACCEPTANCE: EVIDENCE SUBMITTED

C. CALCULATIONS

1. *Comparative Analysis and Anchor calculations, All Broward Hurricane Panel Co., Pages 1 through 8, prepared by Knezevich & Associates, Inc., signed and sealed by V.J. Knezevich, P.E. on July 8, 1998.*
2. *Comparative Analysis, All Broward Hurricane Panel Co., Pages 1 through 3, prepared by Knezevich & Associates, Inc., signed & sealed by V.J. Knezevich, P.E. on Oct. 20, 1998.*

D. MATERIAL CERTIFICATION

1. *Mill Certified Inspection Report issued by American Douglas Metals, Inc., dated 10/28/98, for Galvanized Structural Grade 50 (D) G-60 20 Gauge x 18" x coil .*
2. *Certified Tensile Test Report Number CTL-499D, prepared by Certified Testing Laboratories, dated June 1, 1998, for steel storm panel sample #CTC-98-020, signed and sealed by Ramesh Patel, P.E.*

4. EVIDENCE SUBMITTED UNDER PREVIOUS APPROVAL # 00-0426.06

A. DRAWINGS

1. *None.*

B. TESTS

1. *None.*

C. CALCULATIONS

1. *None.*

D. MATERIAL CERTIFICATION

1. *None.*

5. EVIDENCE SUBMITTED UNDER PREVIOUS APPROVAL # 03-0423.02

A. DRAWINGS

1. *Drawing No. 03-269, titled " 20 ga. Steel Storm Panel ", sheets 1 through 7 of 7, prepared by Knezevich & Associates, Inc., dated April 18, 2003, last revision #0 dated April 18, 2003 signed and sealed V. J. Knezevich, P.E.*

B. TESTS

1. *None.*

C. CALCULATIONS

1. *None.*

D. MATERIAL CERTIFICATIONS

1. *None.*

Helmy A. Makar, P.E., M.S.
Product Control Examiner
NOA No. 08-0630.01
Expiration Date: 07/31/2009
Approval Date: 10/30/2008

NOTICE OF ACCEPTANCE: EVIDENCE SUBMITTED

E. STATEMENTS

1. None.

6. EVIDENCE SUBMITTED UNDER PREVIOUS APPROVAL # 05-1013.02

A. DRAWINGS

1. Drawing No. 05-424, titled " 20 ga. Steel Storm Panel ", sheets 1 through 8 of 8, prepared by Thornton Tomasetti, dated August 31, 2005, last revision #1 dated November 02, 2006, signed and sealed by J. W. Knezevich, P.E.

B. TESTS

1. None.

C. CALCULATIONS

1. Revised anchor calculations, Southern Metal Products, LLC, dated August 03, 2005, Pages 1 through 53, prepared by Thornton-Tomasetti Group, signed and sealed by J. W. Knezevich, P.E.

D. QUALITY ASSURANCE

1. By Miami-Dade County Building Code Compliance Office.

E. MATERIAL CERTIFICATION

1. None.

7. NEW EVIDENCE SUBMITTED

A. DRAWINGS

1. Drawing No. 08-02, titled " 20 GA. Steel Storm Panel ", sheets 1 through 10 of 10, prepared by Al-Farooq Corporation, dated February 14, 2008, last revision #A dated August 07, 2008, signed and sealed by Humayoun Farooq, P.E., on 08/12/2008.

B. TESTS

1. None.

C. CALCULATIONS

1. Comparative analysis and anchor calculations, Southern Metal Products, LLC, dated May 25, 2008, Pages S-1 through S2.2, A-1 through A-36, AP-1 through AP-20, C-1 through C-18, M-1 through M-26, prepared by Al-Farooq Corporation, signed and sealed by Humayoun Farooq, P.E.

D. QUALITY ASSURANCE

1. By Miami-Dade County Building Code Compliance Office.

E. MATERIAL CERTIFICATION

1. None.

Helmy A. Makar, P.E., M.S.
Product Control Examiner
NOA No. 08-0630.01
Expiration Date: 07/31/2009
Approval Date: 10/30/2008

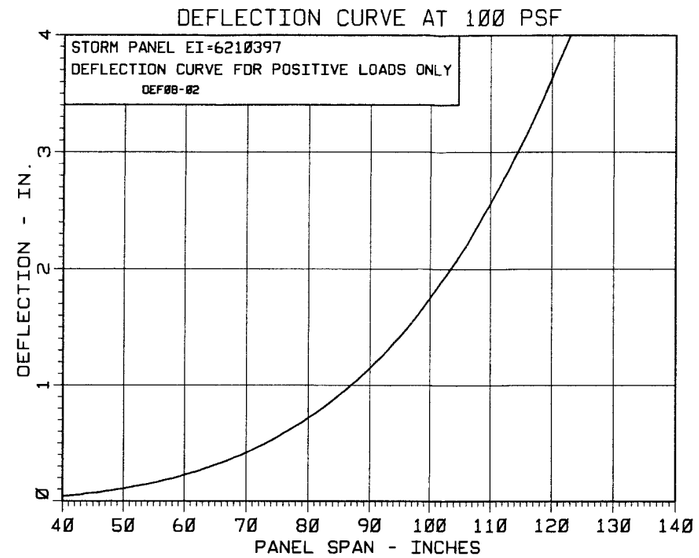

MINIMUM SEPARATION FROM GLASS			
SEPARATION REQD. DUE TO WIND LOAD		SEPARATION REQD. DUE TO LARGE MISSILE IMPACT	
		FOR PANEL SPANS UPTO	SEPARATION
SHUTTER SPAN = H =	IN.		
DESIGN LOAD = Pd =	PSF		
FACTOR = K = Pd/100 =	IN.		
READING FROM SPAN D. CURVE = D =	IN.	104"	2-3/8"
DEFLECTION AT Pd = K*D =	IN.	127"	2-7/8"
MIN. SEPARATION REQD. = K*D+1" =	IN.	137"	3"

FOR INSTALLATIONS UPTO 30' OF GRADE USE MAXIMUM OF WIND LOAD OR IMPACT LOAD REQUIREMENTS SHOWN ABOVE

FOR INSTALLATIONS ABOVE 30' OF GRADE IGNORE LARGE MISSILE IMPACT REQUIREMENT.

NOTE: NO PART OF SHUTTER SHALL BE UNDER 30' ABOVE GRADE TO WAIVE LARGE MISSILE IMPACT REQUIREMENT.

PANEL PERFORMANCE CHART		
DESIGN LOADS PSF EXT./INT.	PANEL SPAN - INCHES	
	1/4" GAP BETWEEN PANEL & HEADER	3/4" GAP BETWEEN PANEL & HEADER
55	137	104
60	131.8	104
64.13	127.0	104
65	126.4	104
70	122.9	103
75	119.4	96.1
80	115.9	90.1
85	112.4	84.8
90	108.9	80.1
95	105.4	75.9
97.07	104	74.2
100	102.6	72.1
105	100.3	68.6
110	98	65.5
115	95.7	62.7
120	93.4	60.1
125	91	57.7
130	88.7	55.4
135	86.4	53.4
140	84.1	51.5
145	81.7	49.7
150	79.4	48.0
155	77.1	46.5
160	74.8	45
165	72.5	43.7
166	72	43.4

USE PANEL PERFORMANCE CHART TO VERIFY PANEL CAPACITY FOR THE REQUIRED DESIGN LOAD FOR THE PARTICULAR LOCATION. USE SPAN DEFLECTION CHART TO CALCULATE SEPARATION FROM GLASS.

DESIGN LOADS SHALL BE CALCULATED AS PER REQUIREMENTS OF ASCE 7-02/04.

GENERAL NOTES

1. THIS PRODUCT HAS BEEN DESIGNED AND TESTED TO COMPLY WITH THE REQUIREMENTS OF THE FLORIDA BUILDING CODE 2004/2007 EDITION INCLUDING HIGH VELOCITY HURRICANE ZONE (HVHZ).
2. DESIGN CRITERIA FOR ALUMINUM, MINIMUM MECHANICAL PROPERTIES, AND SAFETY FACTORS ARE IN ACCORDANCE WITH THE "ALUMINUM CONSTRUCTION MANUAL" LATEST EDITION.
3. ALUMINUM ALLOYS: ALL EXTRUSIONS SHALL BE ALLOY AS SHOWN
4. STEEL SURFACES TO BE PLACED IN CONTACT WITH ALUMINUM SHALL BE GIVEN ONE COAT OF ZINC CHROMATE PRIMER IN ACCORDANCE WITH FEDERAL SPEC. NO. TTP-645, OR BE GALVANIZED.
5. ANCHORS SHALL BE AS SHOWN ON DETAILS. ANCHOR EMBEDMENT TO BASE MATERIAL SHALL BE BEYOND WALL DRESSING OR STUCCO.
6. ALL BOLTS SHALL BE STAINLESS STEEL, ALUMINUM ALLOY 2024-T4 OR 7075-T6, OR PLATED STEEL. WING NUTS TO BE OF ZINC ALLOY.
7. DESIGN CRITERIA FOR PANELS: MAX DEFLECTION < L/30 FOR NEGATIVE LOAD AND THE LESSER OF L/30 OR 2" FOR POSITIVE LOAD.
8. ANCHORING OR LOADING CONDITIONS OTHER THAN THOSE SHOWN IN THESE DETAILS ARE NOT PART OF THIS APPROVAL.
9. A LOAD DURATION INCREASE IN ALLOWABLE STRESS IS USED IN DESIGN OF ANCHORS INTO WOOD ONLY.

PRODUCT MARKING

A LABEL SHALL BE AFFIXED AT BOTTOM OF EACH PANEL WITH THE FOLLOWING STATEMENT.

Southern Metal Products, LLC
dba-All Broward Hurricane Panel
Ft, Lauderdale, Florida
Miami-Dade County Product Control Approved

PRODUCT REVISED
as complying with the Florida
Buiding Code
Acceptance No 08-0630.01
Expiration Date 07/31/2009
By Helmy A. Mehr
Miami Dade Product Control
Division

Engr: DR. HUMAYOUN FAROOQ
STRUCTURES
FLA. PE # 16557
C.A.N. 3538

AUG 1 2 2008

AL-FAROOQ CORPORATION
ENGINEERS & PRODUCT DEVELOPMENT
1235 S.W. 87 AVE
MIAMI, FLORIDA 33174
TEL. (305) 264-8100 FAX. (305) 262-6978

PANELS/08-02ABH

20 GA. STEEL STORM PANEL

Southern Metal Products, LLC
dba-All Broward Hurricane Panel
450 West McNab Road
Ft. Lauderdale, Fl. 33309
TEL. 1-800-432-1803 FAX. 954-973-3928

revisions:

no	date	by	description
A	08.07.08		REV. PER BCCO COMMENTS

date: 02-14-08
scale: 1/2" = 1"
dr. by: HAMID
chk. by:

drawing no.
08-02

sheet 1 of 10

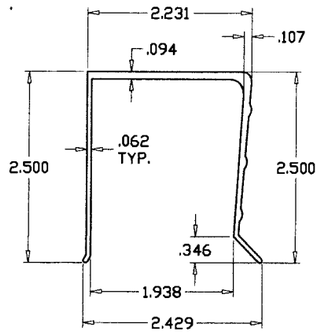

CEILING HEADER
6063–T6

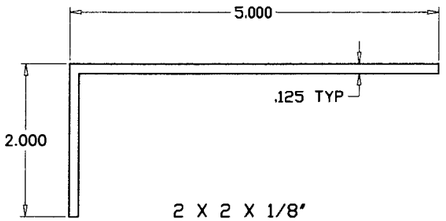

2 X 2 X 1/8"
2 X 3 X 1/8"
2 X 4 X 1/8"
2 X 5 X 1/8"

BUILT–OUT ANGLES
6063–T6

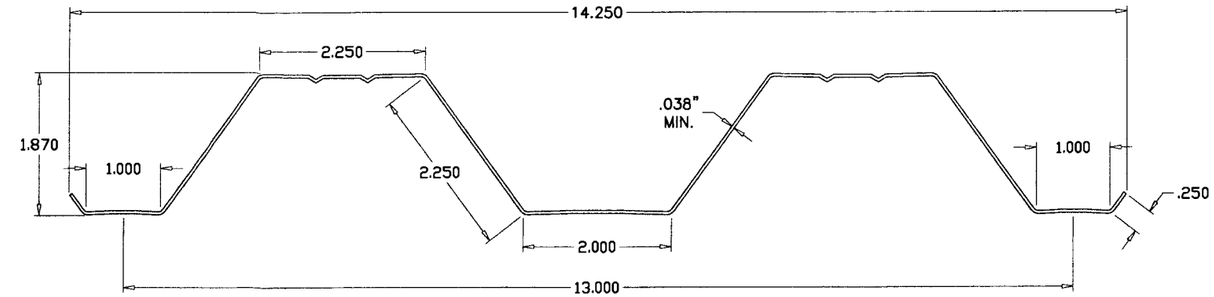

ROLL FORMED PANEL
20 GA. STEEL

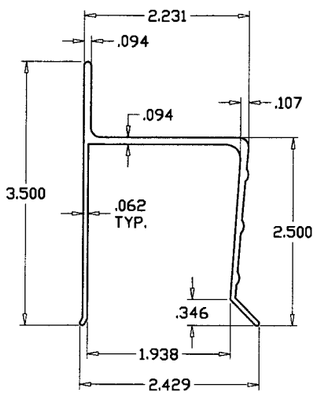

WALL HEADER
6063–T6

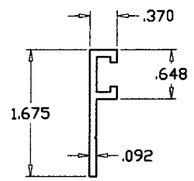

F–TRACK
6063–T6

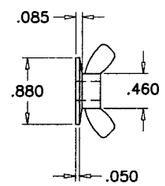

WING NUT

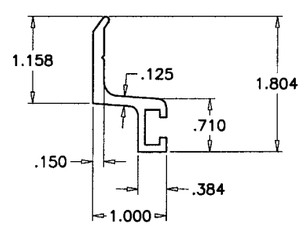

1"–TRACK
6063–T6

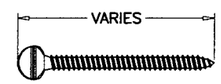

#8–32 THUMBSCREW
LOCATED AT 11" FROM
LEFT END OF SLIDE TRACK

THUMB SCREW

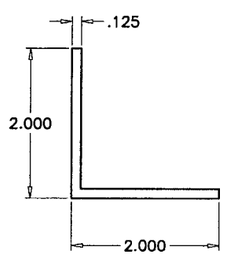

STUDDED ANGLE
6063–T6

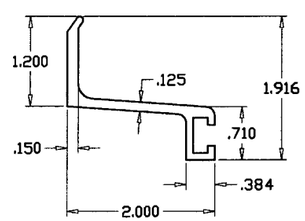

2"–TRACK
6063–T6

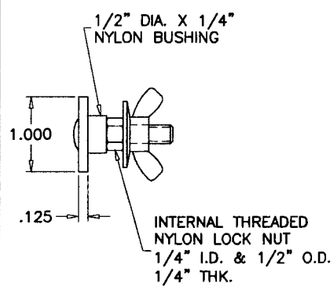

STUDDED STRAP

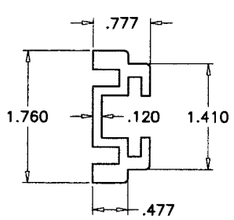

SLIDE–TRACK
6063–T6

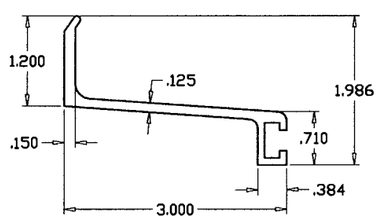

3"–TRACK
6063–T6

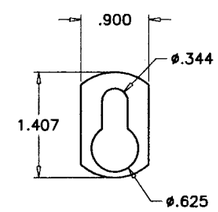

THK. = .085" MIN.

KEYHOLE WASHER
3003–H14

PRODUCT REVISED
as complying with the Florida Buiding Code
Acceptance No 08-0630.01
Expiration Date 07/31/2009
By Helmy A. Mek
Miami Dade Product Control Division

Engr: DR. HUMAYOUN FAROOQ
STRUCTURES
FLA. PE # 16557
C.A.N. 3538

AUG 1 2 2008

AL-FAROOQ CORPORATION
ENGINEERS & PRODUCT DEVELOPMENT
1235 S.W. 87 AVE
MIAMI, FLORIDA 33174
TEL. (305) 264-8100 FAX. (305) 262-6978

PANELS/08–02ABH

20 GA. STEEL STORM PANEL

Southern Metal Products, LLC
dba–All Broward Hurricane Panel
450 West McNab Road
Ft. Lauderdale, Fl. 33309
TEL. 1–800–432–1803 FAX. 954–973–3928

revisions:

no	date	by	description
A	08.07.08		REV. PER BCCO COMMENTS

date: 02–14–08
scale: 1/2" = 1"
dr. by: HAMID
chk. by:

drawing no.
08–02

sheet 2 of 10

WALL MOUNTS

ANCHOR	CHART TO USE CONC.	BLOCK	WOOD	METAL
A	2	1	–	–
B	3	1	–	–
D	3	1	–	–
E	–	–	3	–
G	–	–	–	1

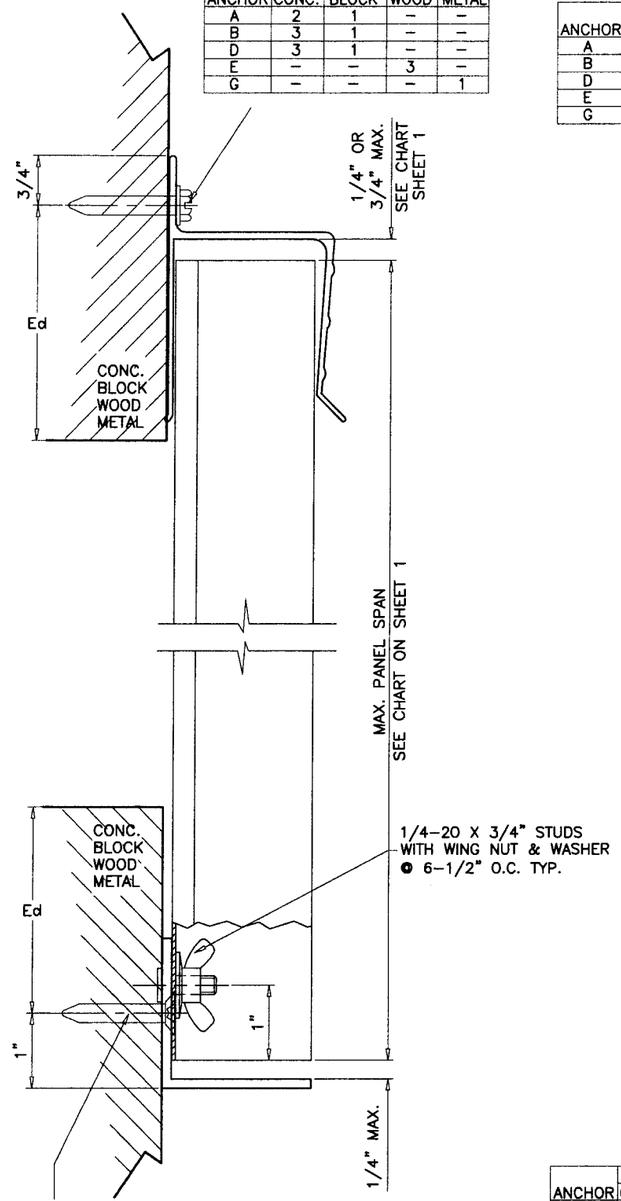

ANCHOR	CHART TO USE CONC.	BLOCK	WOOD	METAL
A	6	4	–	–
B	6	5	–	–
D	6	3	–	–
E	–	–	6	–
G	–	–	–	5

SECTION A–A

TRAP MOUNTS

ANCHOR	CHART TO USE CONC.	BLOCK	WOOD	METAL
A	3	2	–	–
B	3	2	–	–
D	3	1	–	–
E	–	–	3	–
G	–	–	–	2

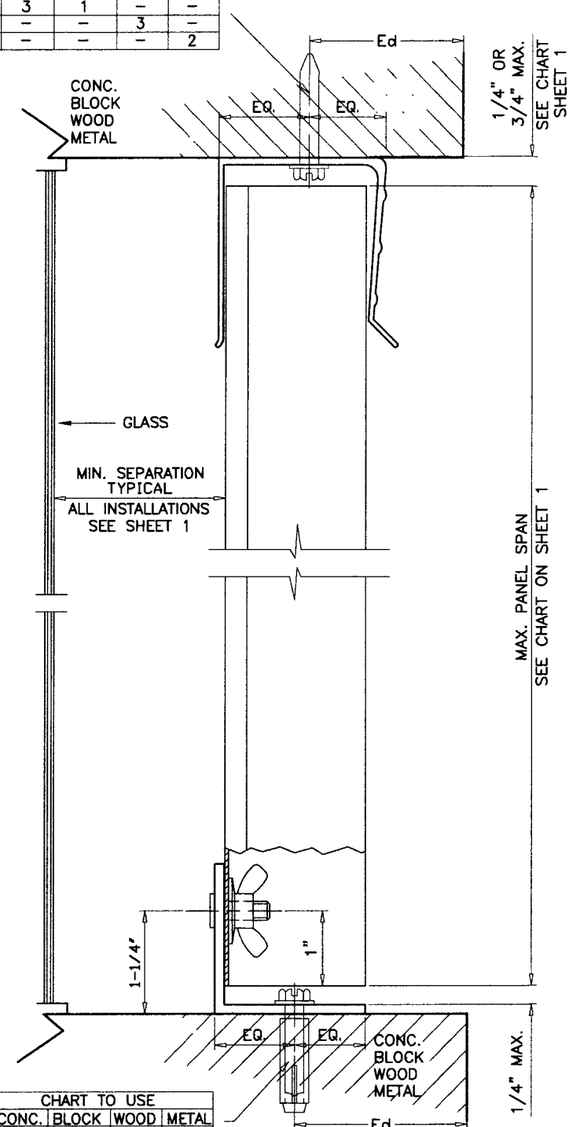

ANCHOR	CHART TO USE CONC.	BLOCK	WOOD	METAL
A	4	3	–	–
B	4	2	–	–
D	4	2	–	–
E	–	–	4	–
G	–	–	–	3

SECTION B–B

DIRECT MOUNTS

ANCHOR	CHART TO USE CONC.	BLOCK
B	6	5
D	6	3

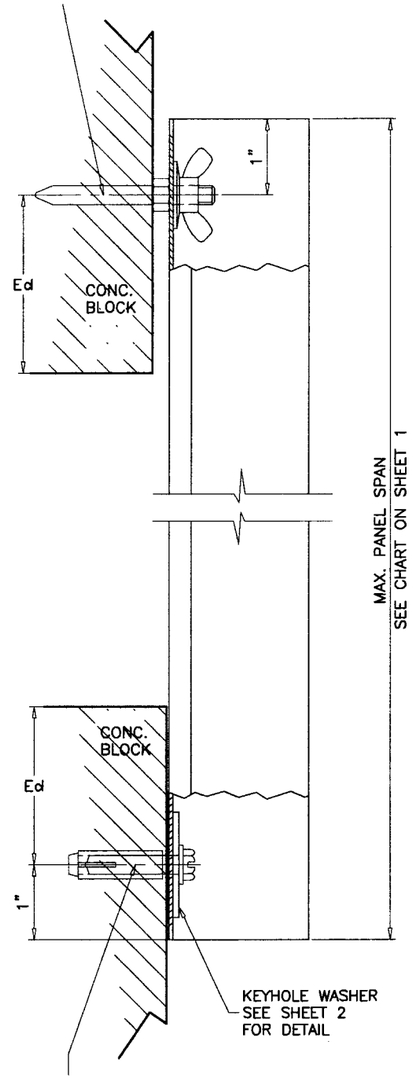

ANCHOR	CHART TO USE CONC.	BLOCK
B	6	5
D	6	3

SECTION C–C

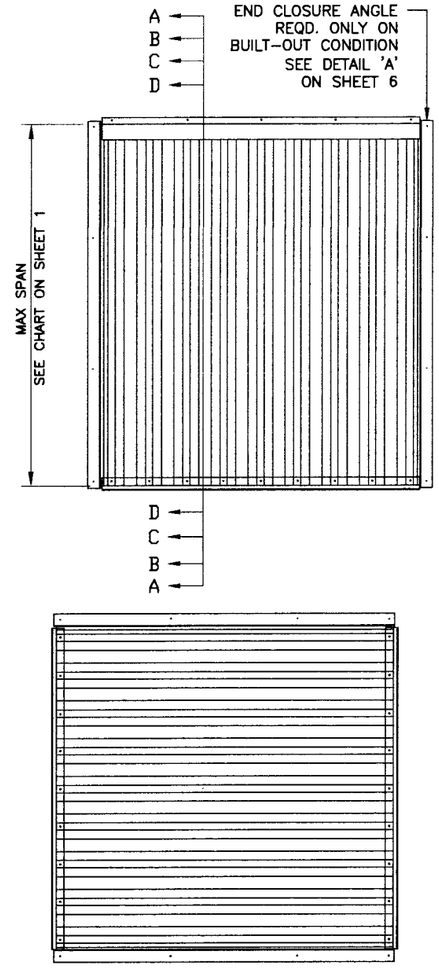

TYPICAL ELEVATION

PANELS CAN BE INSTALLED VERTICALLY OR HORIZONTALLY USING APPLICABLE ANCHORING DETAILS.

Ed = TYPICAL EDGE DISTANCE
CONC. & BLOCK = 12d (12 ANCHOR DIAMETERS)
WOOD = 5d
FOR LESSER EDGE DISTANCES SEE SHEET 10 OF 10.

ANCHORS: EMBEDMENT & EDGE DISTANCES SHOWN ARE BEYOND THE WALL & FLOOR COVERING (STUCCO, TILES, ETC.)

TOP AND BOTTOM DETAILS SHOWN CAN BE USED AT HEAD, SILL OR JAMBS IN ANY COMBINATIONS.

Engr: DR. HUMAYOUN FAROOQ
STRUCTURES
FLA. PE # 16557
C.A.N. 3538

AUG 1 2 2008

PRODUCT REVISED
as complying with the Florida Buiding Code
Acceptance No 08-0630.01
Expiration Date 07/31/2009
By Helen A. Mahon
Miami Dade Product Control Division

afc
AL-FAROOQ CORPORATION
ENGINEERS & PRODUCT DEVELOPMENT
1235 S.W. 87 AVE
MIAMI, FLORIDA 33174
TEL. (305) 264-8100 FAX. (305) 262-6978

PANELS/08-02ABH

20 GA. STEEL STORM PANEL

Southern Metal Products, LLC
dba-All Broward Hurricane Panel
450 West McNab Road
Ft. Lauderdale, Fl. 33309
TEL. 1-800-432-1803 FAX. 954-973-3928

revisions:

no	date	by	description
A	08.07.08		REV. PER BCCO COMMENTS

date: 02-14-08
scale: 1/2" = 1"
dr. by: HAMID
chk. by:

drawing no. 08-02

DIRECT MOUNTS

ANCHOR	CHART TO USE			
	CONC.	BLOCK	WOOD	METAL
A	3	1	–	–
B	4	2	–	–
D	4	1	–	–
E	–	–	4	–
G	–	–	–	2

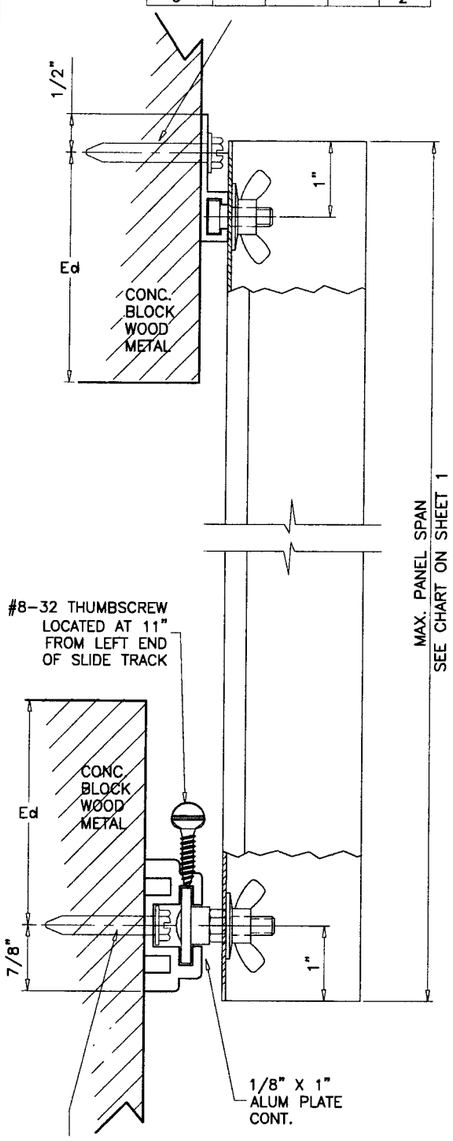

ANCHOR	CHART TO USE			
	CONC.	BLOCK	WOOD	METAL
A	6	4	–	–
B	6	5	–	–
D	6	3	–	–
E	–	–	6	–
G	–	–	–	4

SECTION D–D

BUILT–OUT CONDITION

ANCHOR	CHART TO USE			
	CONC.	BLOCK	WOOD	METAL
A	3	1	–	–
B	3	2	–	–
D	4	1	–	–
E	–	–	3	–
G	–	–	–	1

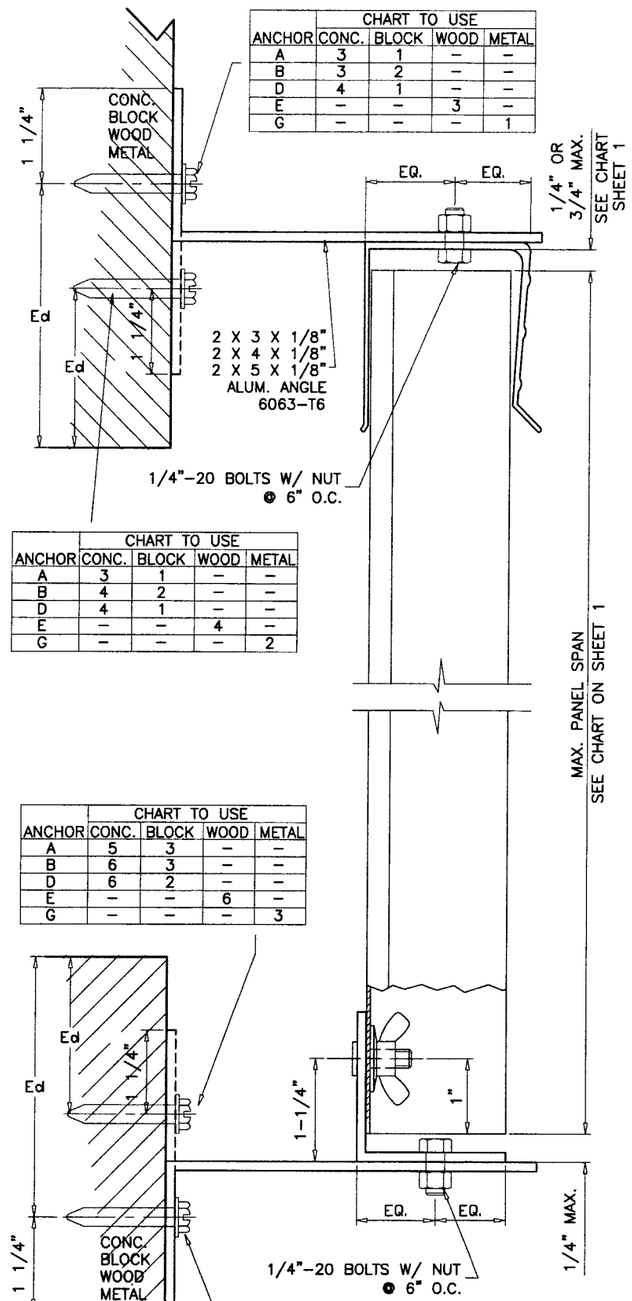

ANCHOR	CHART TO USE			
	CONC.	BLOCK	WOOD	METAL
A	3	1	–	–
B	4	2	–	–
D	4	1	–	–
E	–	–	4	–
G	–	–	–	2

ANCHOR	CHART TO USE			
	CONC.	BLOCK	WOOD	METAL
A	5	3	–	–
B	6	3	–	–
D	6	2	–	–
E	–	–	6	–
G	–	–	–	3

ANCHOR	CHART TO USE			
	CONC.	BLOCK	WOOD	METAL
A	2	–	–	–
B	3	1	–	–
D	3	–	–	–
E	–	–	3	–
G	–	–	–	1

BUILT–OUT CONDITION

ANCHOR	CHART TO USE			
	CONC.	BLOCK	WOOD	METAL
A	3	1	–	–
B	3	1	–	–
D	4	–	–	–
E	–	–	3	–
G	–	–	–	1

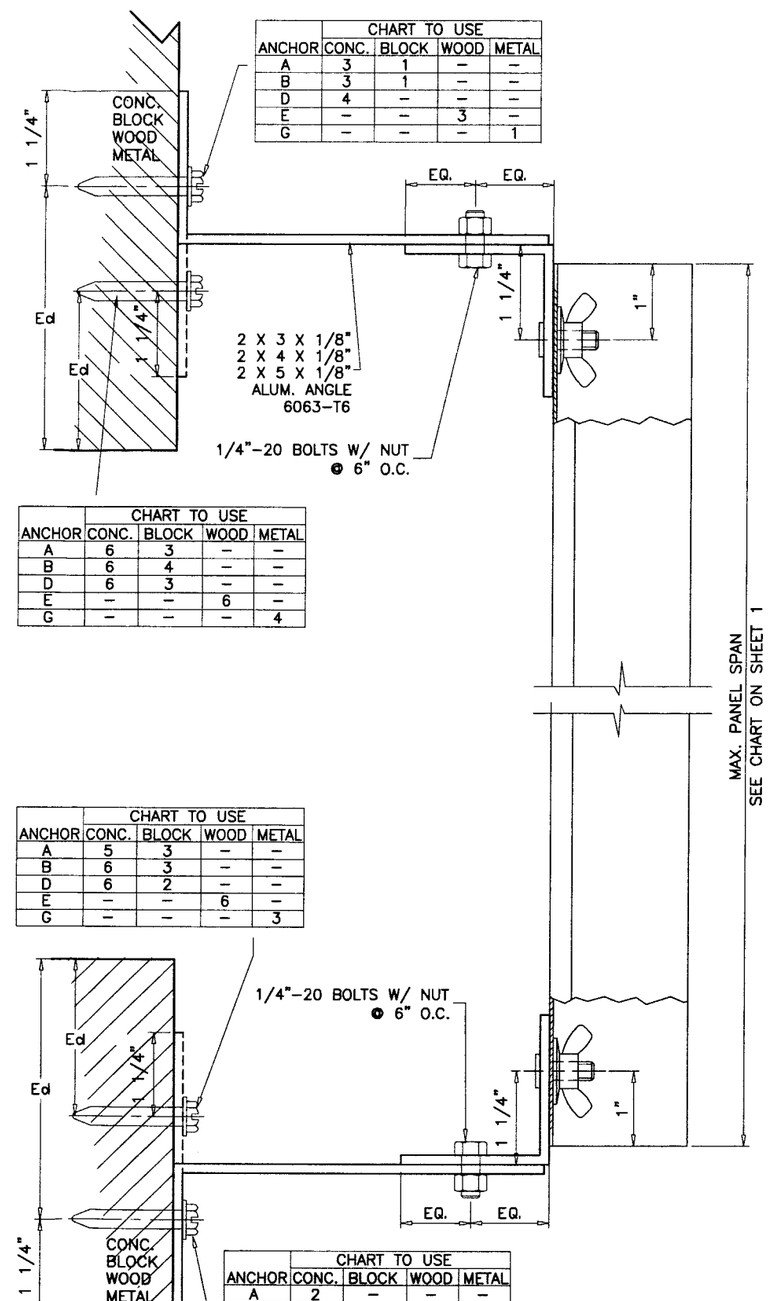

ANCHOR	CHART TO USE			
	CONC.	BLOCK	WOOD	METAL
A	6	3	–	–
B	6	4	–	–
D	6	3	–	–
E	–	–	6	–
G	–	–	–	4

ANCHOR	CHART TO USE			
	CONC.	BLOCK	WOOD	METAL
A	5	3	–	–
B	6	3	–	–
D	6	2	–	–
E	–	–	6	–
G	–	–	–	3

ANCHOR	CHART TO USE			
	CONC.	BLOCK	WOOD	METAL
A	2	–	–	–
B	3	1	–	–
D	3	–	–	–
E	–	–	3	–
G	–	–	–	1

PRODUCT REVISED
as complying with the Florida Building Code
Acceptance No 08-0630.01
Expiration Date 07/31/2009
By Helen A. Mele
Miami Dade Product Control Division

Engr: DR. HUMAYOUN FAROOQ
STRUCTURES
FLA. PE # 16357
C.A.N. 3538

AUG 12 2008

TOP AND BOTTOM DETAILS SHOWN CAN BE USED AT HEAD, SILL OR JAMBS IN ANY COMBINATIONS.

AL-FAROOQ CORPORATION
ENGINEERS & PRODUCT DEVELOPMENT
1235 S.W. 87 AVE
MIAMI, FLORIDA 33174
TEL. (305) 264-8100 FAX. (305) 262-6978

PANELS/08-02ABH

20 GA. STEEL STORM PANEL

Southern Metal Products, LLC
dba–All Broward Hurricane Panel
450 West McNab Road
Ft. Lauderdale, Fl. 33309
TEL. 1-800-432-1803 FAX. 954-973-3928

revisions:

no	date	by	description
A	08.07.08		REV. PER BCCO COMMENTS

date: 02-14-08
scale: 1/2" = 1"
dr. by: HAMID
chk. by:

drawing no.
08-02

sheet 4 of 10

BUILT-OUT CONDITIONS

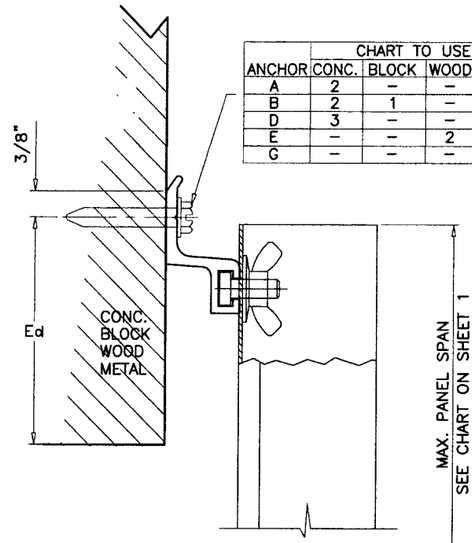

ANCHOR	CHART TO USE			
	CONC.	BLOCK	WOOD	METAL
A	2	–	–	–
B	2	1	–	–
D	3	–	–	–
E	–	–	2	–
G	–	–	–	1

1"–TRACK

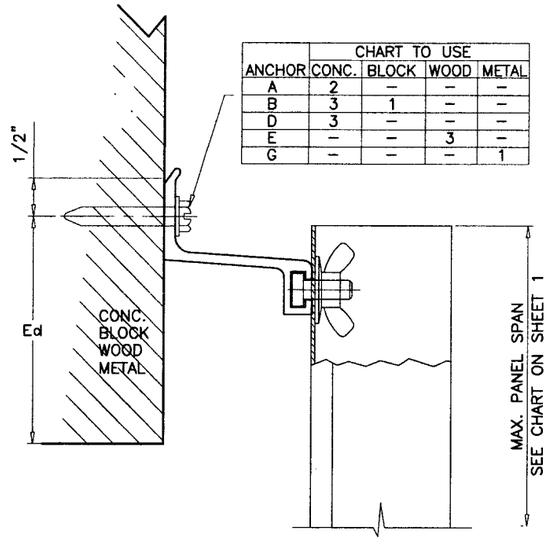

ANCHOR	CHART TO USE			
	CONC.	BLOCK	WOOD	METAL
A	2	–	–	–
B	3	1	–	–
D	3	–	–	–
E	–	–	3	–
G	–	–	–	1

2"–TRACK

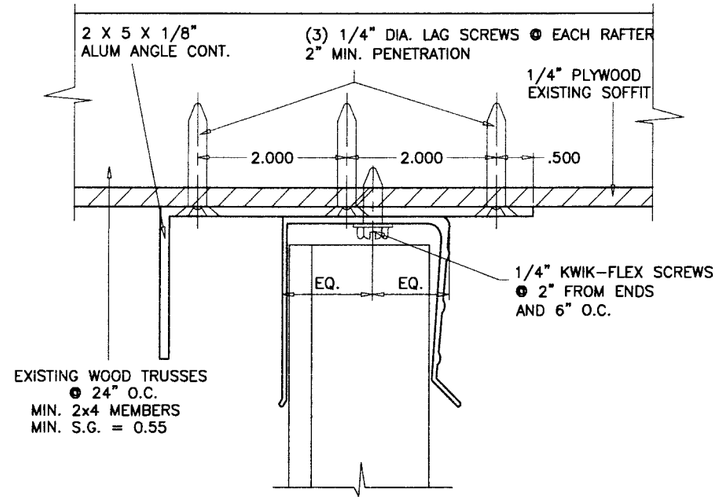

HEADER CONNECTION TO WOOD TRUSSES

SHUTTER HEIGHT	DESIGN LOAD CAPACITY – PSF	
	1/4" GAP BETWEEN PANEL & HEADER	3/4" GAP BETWEEN PANEL & HEADER
72"	83	50
84"	71	42
96"	62	37
108"	55	33

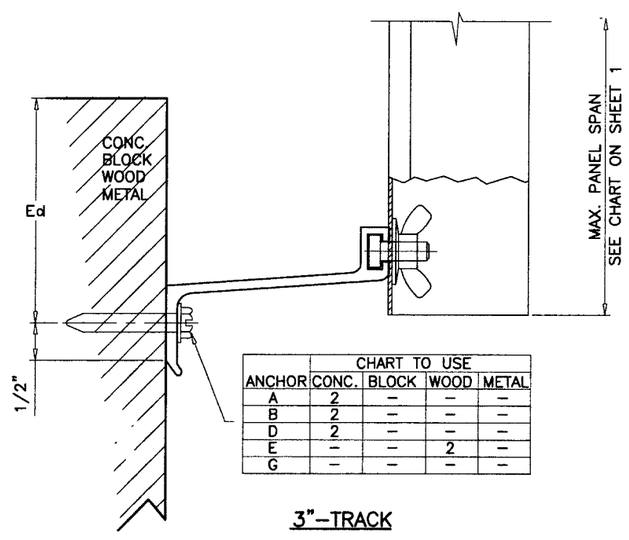

ANCHOR	CHART TO USE			
	CONC.	BLOCK	WOOD	METAL
A	2	–	–	–
B	2	–	–	–
D	2	–	–	–
E	–	–	2	–
G	–	–	–	–

3"–TRACK

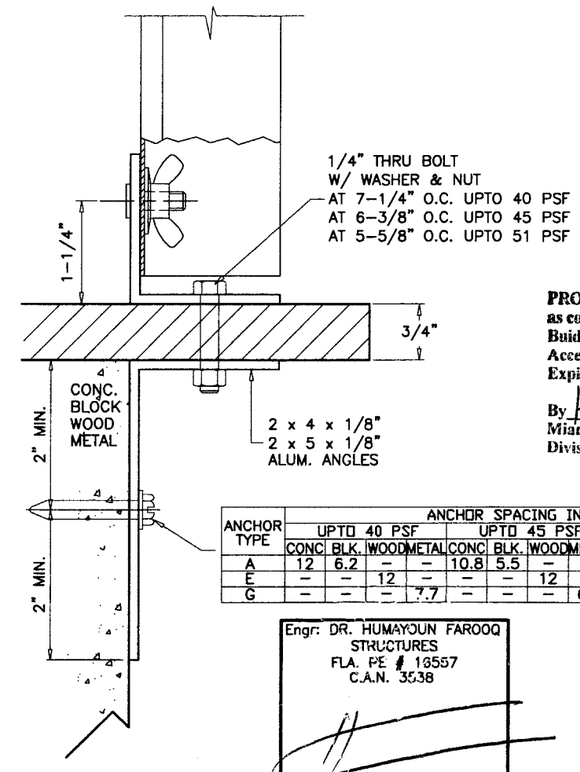

ANCHOR TYPE	ANCHOR SPACING INCHES											
	UPTO 40 PSF				UPTO 45 PSF				UPTO 51 PSF			
	CONC	BLK.	WOOD	METAL	CONC	BLK.	WOOD	METAL	CONC	BLK.	WOOD	METAL
A	12	6.2	–	–	10.8	5.5	–	–	9.6	4.9	–	–
E	–	–	12	–	–	–	12	–	–	–	12	–
G	–	–	–	7.7	–	–	–	6.9	–	–	–	6.1

COUNTER TOP CONDITION
(PASS THRU WINDOW)
MAX SHUTTER HEIGHT = 6 FT.

PRODUCT REVISED
as complying with the Florida Buiding Code
Acceptance No 08-0630.01
Expiration Date 07/31/2009
By Helena A. Melon
Miami Dade Product Control Division

Engr: DR. HUMAYOUN FAROOQ
STRUCTURES
FLA. PE # 16557
C.A.N. 3538

AUG 12 2008

TOP AND BOTTOM DETAILS SHOWN CAN BE USED AT HEAD, SILL OR JAMBS IN ANY COMBINATIONS.

AL-FAROOQ CORPORATION
ENGINEERS & PRODUCT DEVELOPMENT
1235 S.W. 87 AVE
MIAMI, FLORIDA 33174
TEL. (305) 264-8100 FAX. (305) 262-6978

PANELS/08-02ABH

20 GA. STEEL STORM PANEL

Southern Metal Products, LLC
dba–All Broward Hurricane Panel
450 West McNab Road
Ft. Lauderdale, Fl. 33309
TEL. 1-800-432-1803 FAX. 954-973-3928

revisions:

no	date	by	description
A	08.07.08		REV. PER BCCO COMMENTS

date: 02-14-08
scale: 1/2" = 1"
dr. by: HAMID
chk. by:

drawing no.
08-02

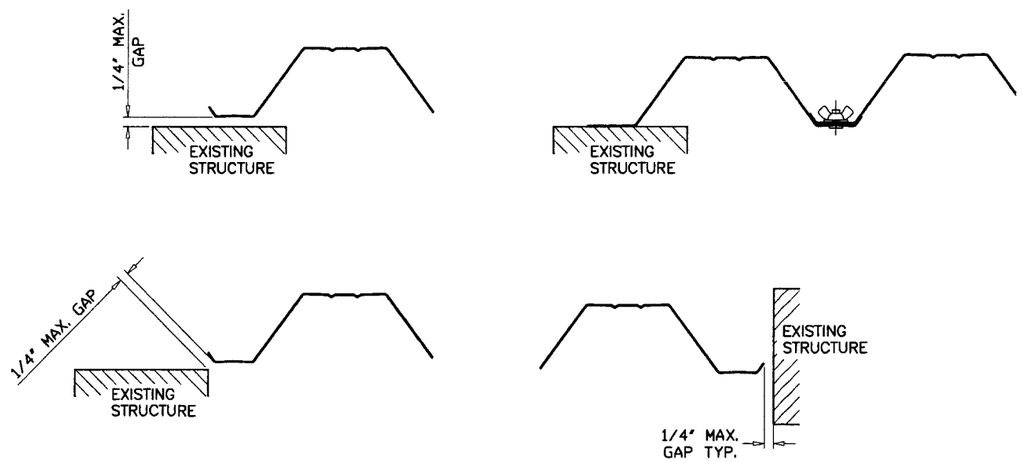

CLOSURE DETAILS

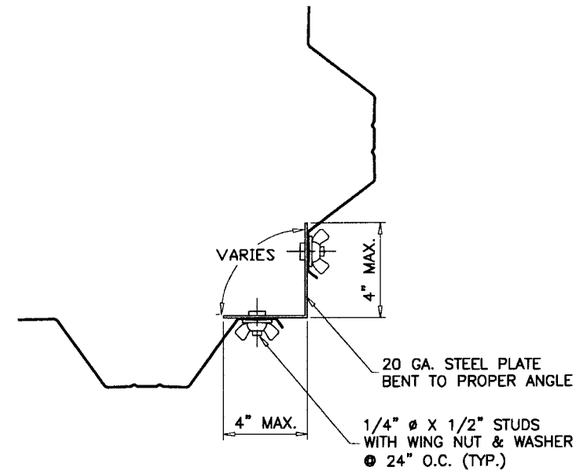

CORNER DETAILS

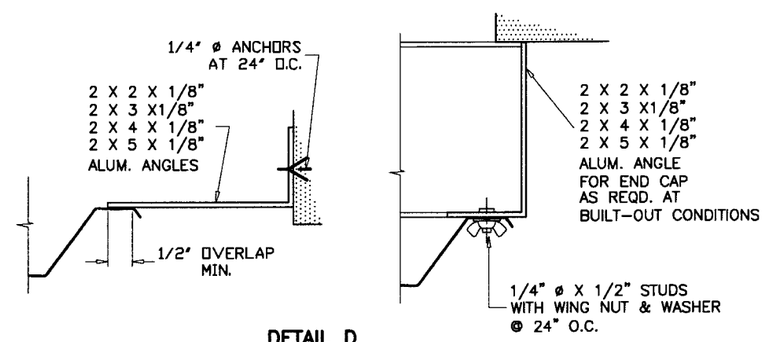

DETAIL D
END CAP BUILT-OUT CONDITION

PRODUCT REVISED
as complying with the Florida Buiding Code
Acceptance No 08-0630.01
Expiration Date 07/31/2009
By Helena A. Mah
Miami Dade Product Control Division

Engr: DR. HUMAYOUN FAROOQ
STRUCTURES
FLA. PE # 16557
C.A.N. 3538

AUG 1 2 2008

AL-FAROOQ CORPORATION
ENGINEERS & PRODUCT DEVELOPMENT
1235 S.W. 87 AVE
MIAMI, FLORIDA 33174
TEL. (305) 264-8100 FAX. (305) 262-6978

PANELS/08-02ABH

20 GA. STEEL STORM PANEL

Southern Metal Products, LLC
dba-All Broward Hurricane Panel
450 West McNab Road
Ft. Lauderdale, Fl. 33309
TEL. 1-800-432-1803 FAX. 954-973-3928

revisions:

no	date	by	description
A	08.07.08		REV. PER BCCO COMMENTS

date: 02-14-08
scale: 1/2" = 1"
dr. by: HAMID
chk. by:

drawing no.
08-02

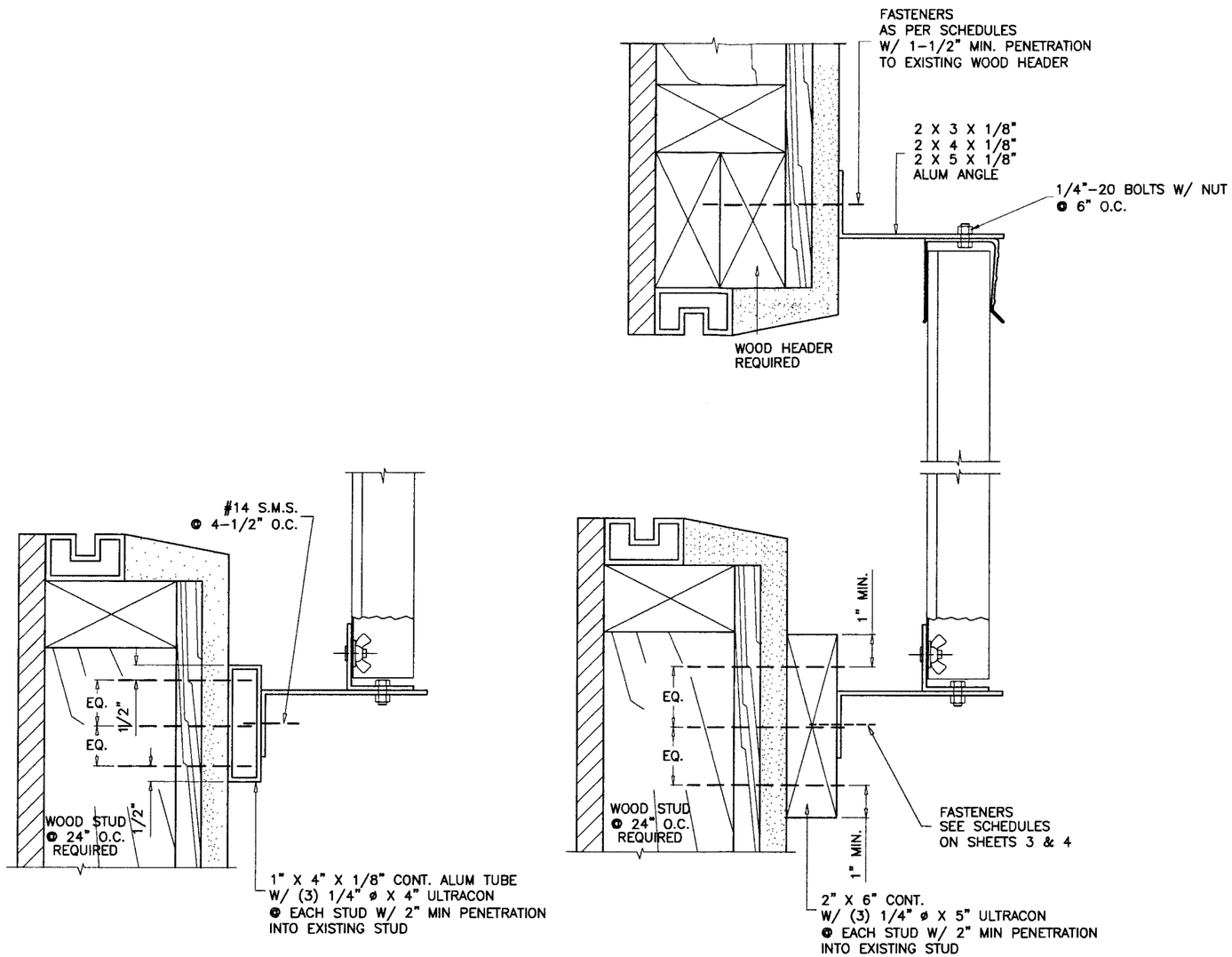

INSTALLATION DETAIL ON EXISTING WOOD STUDS SCALE : 1/4"=1"

SHUTTER HEIGHT	DESIGN LOAD CAPACITY – PSF	
	1/4" GAP BETWEEN PANEL & HEADER	3/4" GAP BETWEEN PANEL & HEADER
84"	71	42
96"	62	37
108"	55	33
120"	49	30

ABOVE DETAILS SHOWS CONNECTION OF 2X6 BUCK & 1X4 ALUM TUBE TO WOOD STUDS TO PROVIDE A CONTINUOUS SURFACE FOR SHUTTER INSTALLATION.

FOR INSTALLATION DETAILS OF HEADER/SILL TO CONTINUOUS WOOD MEMBERS SEE SHEETS 3 THRU 5.

PRODUCT REVISED
as complying with the Florida Buiding Code
Acceptance No 08-0630.01
Expiration Date 07/31/2009
By [signature]
Miami Dade Product Control Division

Engr: DR. HUMAYOUN FAROOQ
STRUCTURES
FLA. PE # 16557
C.A.N. 3538

AUG 1 2 2008

AL-FAROOQ CORPORATION
ENGINEERS & PRODUCT DEVELOPMENT
1235 S.W. 87 AVE
MIAMI, FLORIDA 33174
TEL. (305) 264-8100 FAX. (305) 262-6978

PANELS/08-02ABH

20 GA. STEEL STORM PANEL

Southern Metal Products, LLC
dba-All Broward Hurricane Panel
450 West McNab Road
Ft. Lauderdale, Fl. 33309
TEL. 1-800-432-1803 FAX. 954-973-3928

revisions:

no	date	by	description
A	08.07.08		REV. PER BCCO COMMENTS

date: 02-14-08
scale: 1/2" = 1"
dr. by: HAMID
chk. by:

drawing no.
08-02

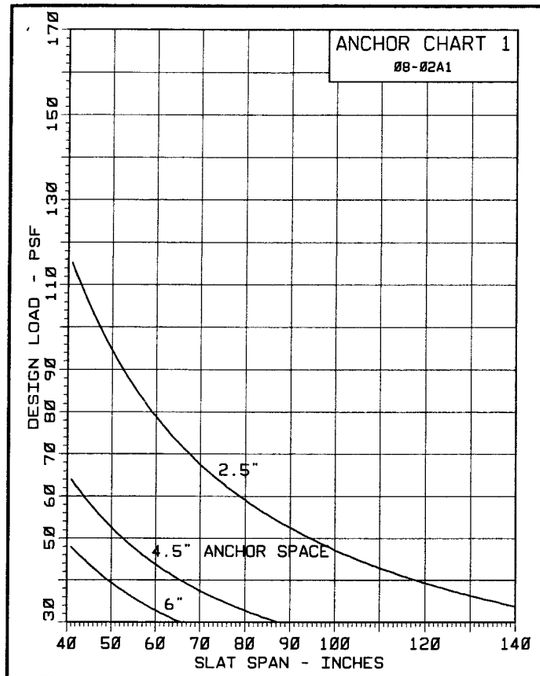

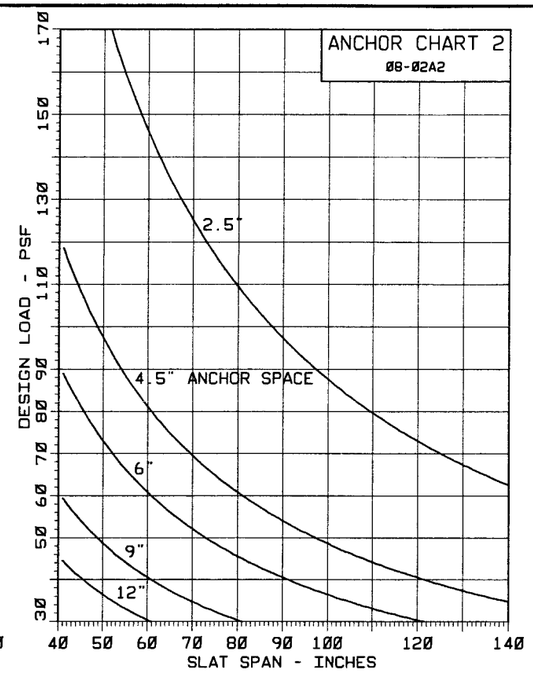

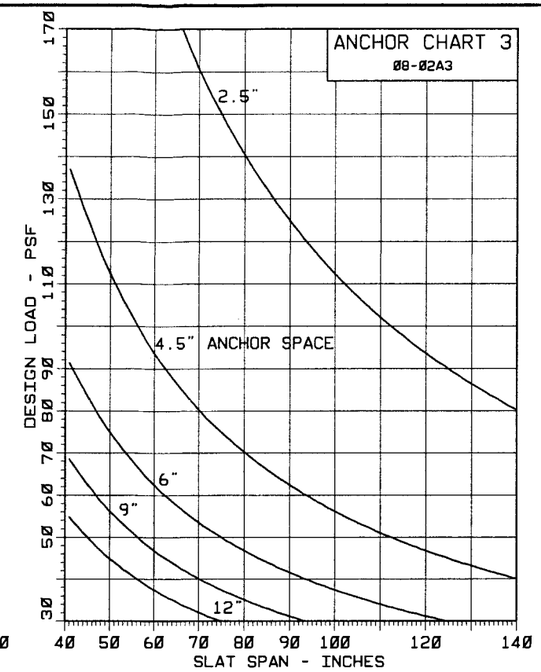

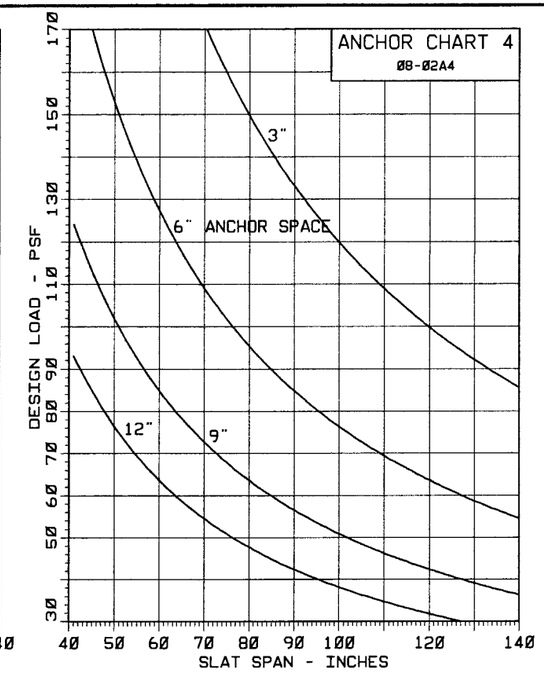

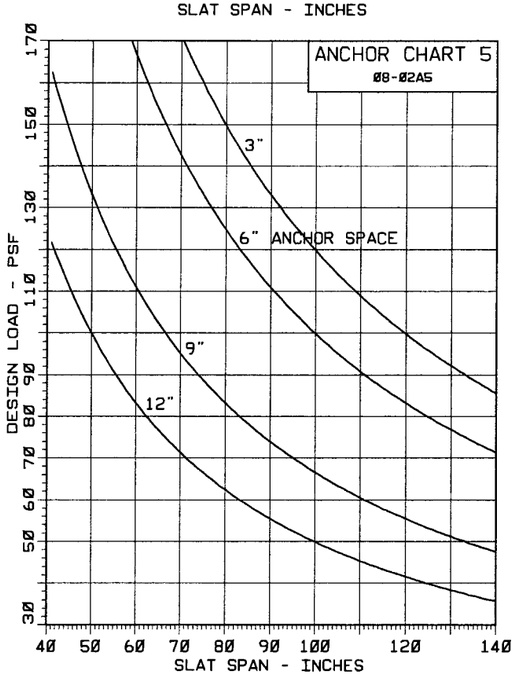

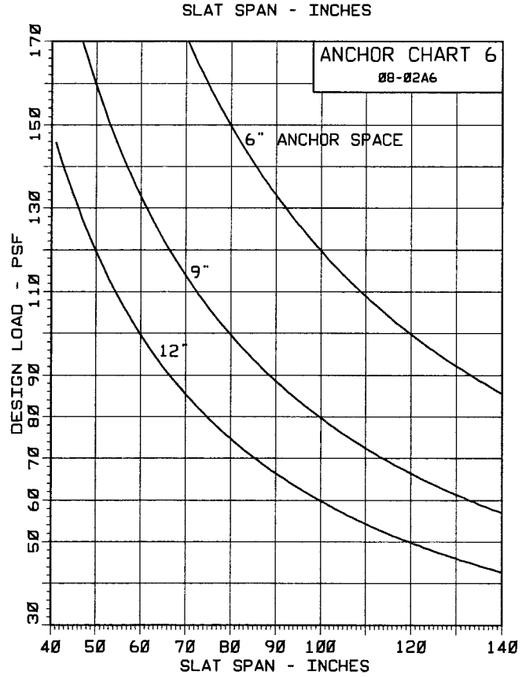

USE CHARTS 1 THRU 6 TO VERIFY ANCHOR REQUIREMENTS AND STRESS LIMITATIONS OF LOAD/SPAN COMBINATIONS FOR HEADER AND SILL.

TYPICAL ANCHORS:

ANCHOR (A) = 1/4" DIA. ULTRACON (BY ELCO)
1-3/4" EMBEDMENT INTO 3000 PSI CONC.
1-1/4" EMBEDMENT INTO C-90 BLOCK

ANCHOR (B) = 1/4" DIA. PANELMATE ANCHORS (ELCO-TEXTRON)
1-3/4" EMBEDMENT TO CONC.
1-1/4" EMBEDMENT TO BLOCK
1-7/8" MIN PENETRATION INTO WOOD(S.G.=0.47)

ANCHOR (D) = 1/4" RAWL CALK-IN
TOTAL ANCHOR BODY INTO 3000 PSI CONC. OR C-90 BLOCK

ANCHOR (E) = 1/4" DIA. LAG SCREWS
1-1/2" MIN PENETRATION INTO WOOD(S.G.=0.55)

ANCHOR (G) = 1/4" DIA. KWIK-FLEX SELF DRILLING SCREWS
INTO METAL STRUCTURES (STEEL OR ALUMINUM 1/8" MIN. THICK.)

NOTE: ANCHORS EMBEDMENT SHOWN IS BEYOND WALL & FLOOR COVERINGS (STUCCO, TILES, ETC.)

FASTENER SPACING IN MASONRY/CONCRETE					
CHARTS ARE BASED ON TYPICAL EDGE DISTANCE = 12d. FOR LESSER EDGE DISTANCE DECREASE SPACING BY MULTIPLYING WITH THE FACTOR BELOW					
EDGE DIST.	12d=3"	10d=2-1/2"	8d=2"	6d=1-1/2"	5d=1-1/4"
FACTOR	1.00	0.86	0.71	0.57	0.50
EXAMPLE: FOR 3" EDGE DIST. SPACING = 9" O.C. (FROM CHART) FOR 2" EDGE DIST. SPACING = 9 X .71 = 6.4 O.C.					

TYPICAL EDGE DISTANCE IN WOOD = 3/4"
TYPICAL END DISTANCE IN WOOD = 1"
NO REDUCTION FACTOR IS REQUIRED

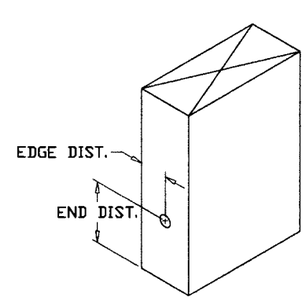

Engr: DR. HUMAYOUN FAROOQ
STRUCTURES
FLA. PE # 16557
C.A.N. 3538

AUG 1 2 2008

PRODUCT REVISED
as complying with the Florida Buiding Code
Acceptance No 08-0630.01
Expiration Date 07/31/2009
By Helen A. Mahon
Miami Dade Product Control Division

afc
AL-FAROOQ CORPORATION
ENGINEERS & PRODUCT DEVELOPMENT
1235 S.W. 87 AVE
MIAMI, FLORIDA 33174
TEL. (305) 264-8100 FAX. (305) 262-6978

PANELS/08-02ABH

20 GA. STEEL STORM PANEL

Southern Metal Products, LLC
dba-All Broward Hurricane Panel
450 West McNab Road
Ft. Lauderdale, Fl. 33309
TEL. 1-800-432-1803 FAX. 954-973-3928

revisions:

no	date	by	description
A	08.07.08		NO CHANGE THIS SHEET

date: 02-14-08
scale: 1/2" = 1"
dr. by: HAMID
chk. by:

drawing no. 08-02

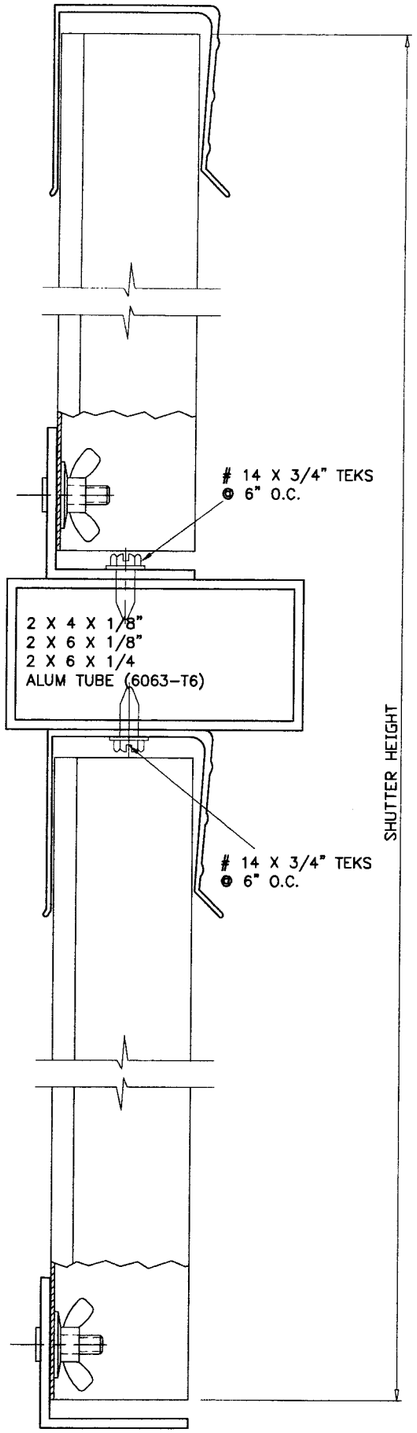

FOR HEAD & SILL COMBINATIONS
SEE TYPICAL DETAILS AND SCHEDULES

DESIGN LOAD CAPACITY - PSF

TRIBUTARY HEIGHT (H)	SPAN TUBE LENGTH	ALUMINUM TUBES 2X4X1/8"	2X6X1/8"	2X6X1/4"
48"	60"	100.0	100.0	100.0
54"		100.0	100.0	100.0
60"		100.0	100.0	100.0
66"		100.0	100.0	100.0
72"		99.2	100.0	100.0
78"		91.6	100.0	100.0
84"		85.0	100.0	100.0
90"		79.4	100.0	100.0
96"		74.4	100.0	100.0
102"		70.0	100.0	100.0
108"		66.1	100.0	100.0
114"		62.7	100.0	100.0
120"		59.5	100.0	100.0
126"		56.7	100.0	100.0
132"		54.1	100.0	100.0
138"		51.8	96.0	100.0
48"	72"	100.0	100.0	100.0
54"		90.7	100.0	100.0
60"		81.6	100.0	100.0
66"		74.2	100.0	100.0
72"		68.0	100.0	100.0
78"		62.8	100.0	100.0
84"		58.3	100.0	100.0
90"		54.4	100.0	100.0
96"		51.0	94.5	100.0
102"		48.0	88.9	100.0
108"		45.4	84.0	100.0
114"		43.0	79.6	100.0
120"		40.8	75.6	100.0
126"		38.9	72.0	95.2
132"		37.1	68.7	90.9
138"		35.5	65.7	87.0
48"	84"	64.3	100.0	100.0
54"		57.1	100.0	100.0
60"		51.4	100.0	100.0
66"		46.7	99.4	100.0
72"		42.8	91.2	100.0
78"		39.6	84.1	100.0
84"		36.7	78.1	100.0
90"		34.3	72.9	100.0
96"		32.1	68.4	100.0
102"		30.2	64.3	100.0
108"		28.6	60.8	95.2
114"		27.1	57.6	90.2
120"		25.7	54.7	85.7
126"		24.5	52.1	81.6
132"		23.4	49.7	77.9
138"		22.4	47.6	74.5

DESIGN LOAD CAPACITY - PSF

TRIBUTARY HEIGHT (H)	SPAN TUBE LENGTH	ALUMINUM TUBES 2X4X1/8"	2X6X1/8"	2X6X1/4"
48"	96"	43.1	100.0	100.0
54"		38.3	91.8	100.0
60"		34.4	82.6	100.0
66"		31.3	75.1	100.0
72"		28.7	68.8	100.0
78"		26.5	63.5	100.0
84"		24.6	59.0	100.0
90"		23.0	55.1	100.0
96"		21.5	51.6	93.8
102"		20.3	48.6	88.2
108"		–	45.9	83.3
114"		–	43.5	78.9
120"		–	41.3	75.0
126"		–	39.3	71.4
132"		–	37.5	68.2
138"		–	35.9	65.2
48"	108"	30.2	80.5	100.0
54"		26.9	71.6	100.0
60"		24.2	64.4	100.0
66"		22.0	58.6	100.0
72"		20.2	53.7	98.0
78"		–	49.5	90.4
84"		–	46.0	84.0
90"		–	42.9	78.4
96"		–	40.3	73.5
102"		–	37.9	69.2
108"		–	35.8	65.3
114"		–	33.9	61.9
120"		–	32.2	58.8
126"		–	30.7	56.0
132"		–	29.3	53.4
138"		–	28.0	51.1
48"	120"	22.0	61.3	100.0
54"		–	54.5	100.0
60"		–	49.0	90.1
66"		–	44.6	81.9
72"		–	40.9	75.1
78"		–	37.7	69.3
84"		–	35.0	64.4
90"		–	32.7	60.1
96"		–	30.7	56.3
102"		–	28.8	53.0
108"		–	27.2	50.1
114"		–	25.8	47.4
120"		–	24.5	45.0
126"		–	23.4	42.9
132"		–	22.3	41.0
138"		–	21.3	39.2

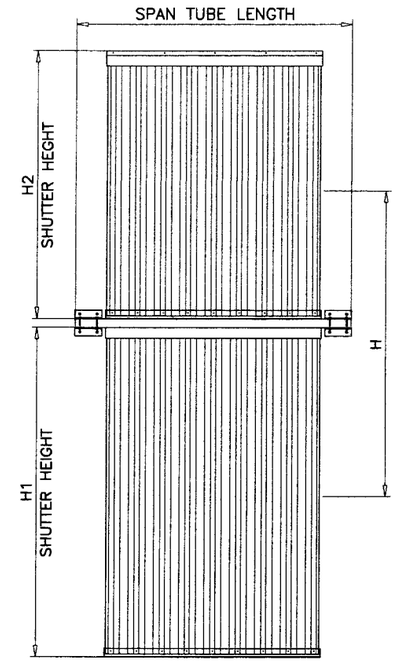

TRIBUTARY HEIGHT (H) = $\frac{H1 + H2}{2}$

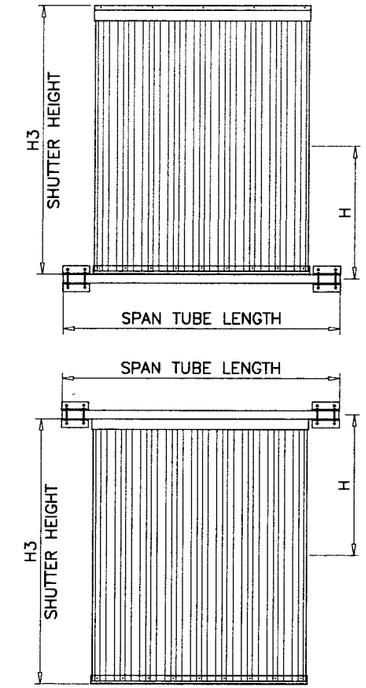

TRIBUTARY HEIGHT (H) = $\frac{H3}{2}$

TYPICAL ELEVATIONS

TUBES MAY BE USED VERTICALLY FOR HORIZONTAL PANEL INSTALLATION.

NOTES:

1. USE CHART ON THIS SHEET FOR SPAN BEAM TUBE CAPACITY.
2. FOR STORM PANEL CAPACITY SEE SHEET 1 OF 10.
3. FOR SPAN TUBE CONNECTION CAPACITY SEE SHEET 10 OF 10.
4. LOWER VALUES FROM STEPS 1, 2 OR 3 WILL APPLY TO ENTIRE SYSTEM.

Engr: DR. HUMAYOUN FAROOQ
STRUCTURES
FLA. PE # 16557
C.A.N. 3538

AUG 1 2 2008

PRODUCT REVISED
as complying with the Florida Buiding Code
Acceptance No 08-0630.01
Expiration Date 07/31/2009
By Helen A. Mahan
Miami Dade Product Control Division

AL-FAROOQ CORPORATION
ENGINEERS & PRODUCT DEVELOPMENT
1235 S.W. 87 AVE
MIAMI, FLORIDA 33174
TEL. (305) 264-8100 FAX. (305) 262-6978

PANELS/08-02ABH

20 GA. STEEL STORM PANEL

Southern Metal Products, LLC
dba-All Broward Hurricane Panel
450 West McNab Road
Ft. Lauderdale, Fl. 33309
TEL. 1-800-432-1803 FAX. 954-973-3928

revisions:

no	date	by	description
A	08.07.08		REV. PER BCCO COMMENTS

date: 02-14-08
scale: 1/2" = 1"
dr. by: HAMID
chk. by:

drawing no. 08-02

DESIGN LOAD CAPACITY – PSF			
TRIBUTARY HEIGHT (H)	SPAN TUBE LENGTH	TUBE CONNECTION TYPE 'A'	TUBE CONNECTION TYPE 'B'
48"	60"	99.5	100.0
54"		88.4	100.0
60"		79.6	100.0
66"		72.4	100.0
72"		66.3	100.0
78"		61.2	100.0
84"		56.9	100.0
90"		53.1	100.0
96"		49.8	100.0
102"		46.8	100.0
108"		44.2	100.0
114"		41.9	100.0
120"		39.8	100.0
126"		37.9	100.0
132"		36.2	100.0
138"		34.6	100.0
48"	72"	82.9	100.0
54"		73.7	100.0
60"		66.3	100.0
66"		60.3	100.0
72"		55.3	100.0
78"		51.0	100.0
84"		47.4	100.0
90"		44.2	100.0
96"		41.5	100.0
102"		39.0	100.0
108"		36.9	100.0
114"		34.9	100.0
120"		33.2	100.0
126"		31.6	95.2
132"		30.2	90.9
138"		28.8	87.0
48"	84"	71.1	100.0
54"		63.2	100.0
60"		56.9	100.0
66"		51.7	100.0
72"		47.4	100.0
78"		43.7	100.0
84"		40.6	100.0
90"		37.9	100.0
96"		35.5	100.0
102"		33.4	100.0
108"		31.6	95.2
114"		29.9	90.2
120"		28.4	85.7
126"		27.1	81.6
132"		25.8	77.9
138"		24.7	74.5

DESIGN LOAD CAPACITY – PSF			
TRIBUTARY HEIGHT (H)	SPAN TUBE LENGTH	TUBE CONNECTION TYPE 'A'	TUBE CONNECTION TYPE 'B'
48"	96"	62.2	100.0
54"		55.3	100.0
60"		49.8	100.0
66"		45.2	100.0
72"		41.5	100.0
78"		38.3	100.0
84"		35.5	100.0
90"		33.2	100.0
96"		31.1	93.8
102"		29.3	88.2
108"		27.6	83.3
114"		26.2	78.9
120"		24.9	75.0
126"		23.7	71.4
132"		22.6	68.2
138"		21.6	65.2
48"	108"	55.3	100.0
54"		49.1	100.0
60"		44.2	100.0
66"		40.2	100.0
72"		36.9	100.0
78"		34.0	100.0
84"		31.6	95.2
90"		29.5	88.9
96"		27.6	83.3
102"		26.0	78.4
108"		24.6	74.1
114"		23.3	70.2
120"		22.1	66.7
126"		21.1	63.5
132"		20.1	60.6
138"		–	58.0
48"	120"	49.8	100.0
54"		44.2	100.0
60"		39.8	100.0
66"		36.2	100.0
72"		33.2	100.0
78"		30.6	92.3
84"		28.4	85.7
90"		26.5	80.0
96"		24.9	75.0
102"		23.4	70.6
108"		22.1	66.7
114"		20.9	63.2
120"		–	60.0
126"		–	57.1
132"		–	54.5
138"		–	52.2

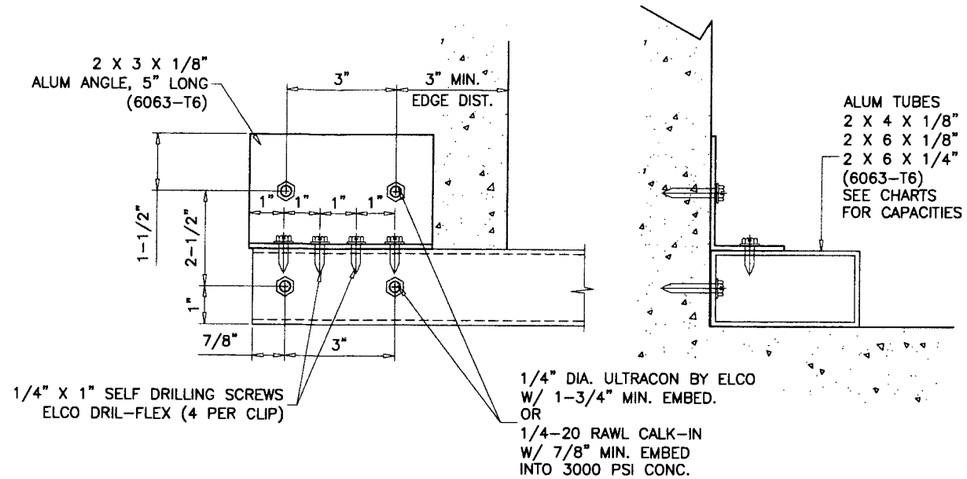

TUBE CONNECTION TO WALL
ANCHOR TYPE 'A'
SEE CHART ABOVE FOR CONNECTION CAPACITY

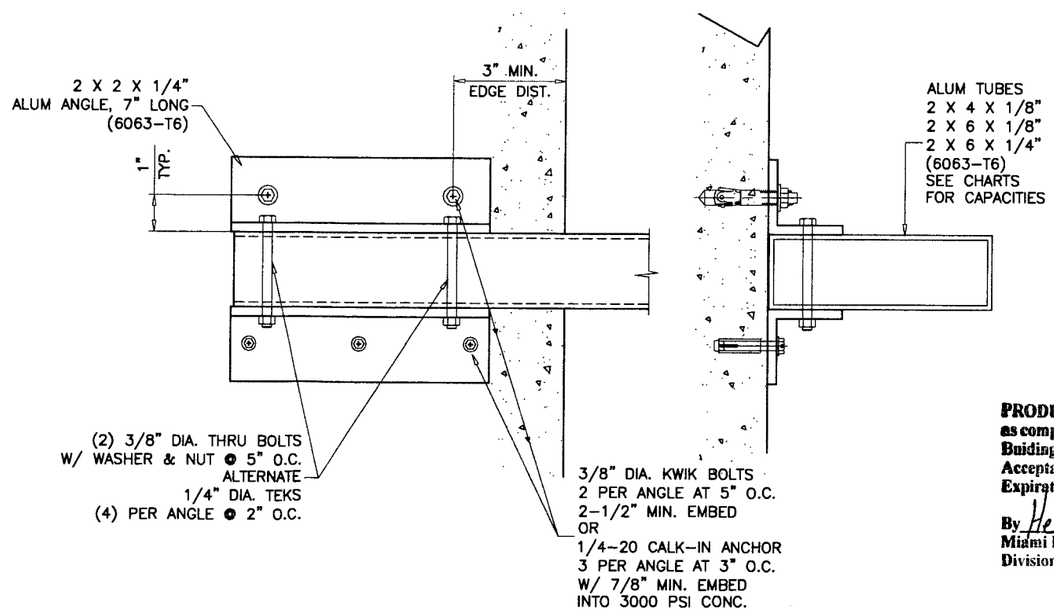

TUBE CONNECTION TO WALL
ANCHOR TYPE 'B'
SEE CHART ABOVE FOR CONNECTION CAPACITY

PRODUCT REVISED
as complying with the Florida Buiding Code
Acceptance No 08-0630.01
Expiration Date 07/31/2009
By Helena A. Melo
Miami Dade Product Control Division

Engr: DR. HUMAYOUN FAROOQ
STRUCTURES
FLA. PE # 16557
C.A.N. 3538

AUG 12 2008

AL-FAROOQ CORPORATION
ENGINEERS & PRODUCT DEVELOPMENT
1235 S.W. 87 AVE
MIAMI, FLORIDA 33174
TEL. (305) 264-8100 FAX. (305) 262-6978

PANELS/08–02ABH

20 GA. STEEL STORM PANEL

Southern Metal Products, LLC
dba–All Broward Hurricane Panel
450 West McNab Road
Ft. Lauderdale, Fl. 33309
TEL. 1–800–432–1803 FAX. 954–973–3928

revisions:			
no	date	by	description
A	08.07.08		NO CHANGE THIS SHEET

date: 02–14–08
scale: 1/4" = 1"
dr. by: HAMID
chk. by:

drawing no.
08–02

sheet 10 of 10