MIAMI-DADE COUNTY

BUILDING CODE COMPLIANCE OFFICE (BCCO)
PRODUCT CONTROL DIVISION

MIAMI-DADE COUNTY, FLORIDA
METRO-DADE FLAGLER BUILDING
140 WEST FLAGLER STREET, SUITE 1603
MIAMI, FLORIDA 33130-1563
(305) 375-2901 FAX (305) 375-2908
www.miamidade.gov/buldingcode.com

NOTICE OF ACCEPTANCE (NOA)

YKK AP America, Inc.
332 Firetower Road
Dublin, GA 31021

SCOPE:

This NOA is being issued under the applicable rules and regulations governing the use of construction materials. The documentation submitted has been reviewed by Miami-Dade County Product Control Division and accepted by the Board of Rules and Appeals (BORA) to be used in Miami Dade County and other areas where allowed by the Authority Having Jurisdiction (AHJ).

This NOA shall not be valid after the expiration date stated below. The Miami-Dade County Product Control Division (In Miami Dade County) and/or the AHJ (in areas other than Miami Dade County) reserve the right to have this product or material tested for quality assurance purposes. If this product or material fails to perform in the accepted manner, the manufacturer will incur the expense of such testing and the AHJ may immediately revoke, modify, or suspend the use of such product or material within their jurisdiction. BORA reserves the right to revoke this acceptance, if it is determined by Miami-Dade County Product Control Division that this product or material fails to meet the requirements of the applicable building code.

This product is approved as described herein, and has been designed to comply with the Florida Building Code, including the High Velocity Hurricane Zone.

DESCRIPTION: Series "YES 45 FS" Flush Glazed Aluminum Storefront System – N.I.

APPROVAL DOCUMENT: Drawing No. **W03-54**, titled "YES 45 F-S Alum. Flush Glaze Storefront Sys. (N.I.)", sheets 1 through 11, 11.1 and 12 through 15 of 15, dated 07/18/03, with revision D dated 09/15/08, prepared by Al-Farooq Corporation, signed and sealed by Humayoun Farooq, P.E., bearing the Miami-Dade County Product Control Revision stamp with the Notice of Acceptance number and expiration date by the Miami-Dade County Product Control Division.

MISSILE IMPACT RATING: None

LABELING: Each unit shall bear a permanent label with the manufacturer's name or logo, city, state and following statement: "Miami-Dade County Product Control Approved", unless otherwise noted herein.

RENEWAL of this NOA shall be considered after a renewal application has been filed and there has been no change in the applicable building code negatively affecting the performance of this product.

TERMINATION of this NOA will occur after the expiration date or if there has been a revision or change in the materials, use, and/or manufacture of the product or process. Misuse of this NOA as an endorsement of any product, for sales, advertising or any other purposes shall automatically terminate this NOA. Failure to comply with any section of this NOA shall be cause for termination and removal of NOA.

ADVERTISEMENT: The NOA number preceded by the words Miami-Dade County, Florida, and followed by the expiration date may be displayed in advertising literature. If any portion of the NOA is displayed, then it shall be done in its entirety.

INSPECTION: A copy of this entire NOA shall be provided to the user by the manufacturer or its distributors and shall be available for inspection at the job site at the request of the Building Official.

This NOA **revises and renews NOA # 07-0417.05** and consists of this page 1 and evidence pages E-1 and E-2, as well as approval document mentioned above.

The submitted documentation was reviewed by **Manuel Perez, P.E.**

MIAMI-DADE COUNTY APPROVED

NOA No. 08-0715.14
Expiration Date: August 7, 2013
Approval Date: October 23, 2008

YKK AP America Inc.

NOTICE OF ACCEPTANCE: EVIDENCE SUBMITTED

A. DRAWINGS

1. Manufacturer's die drawings and sections
2. Drawing No. **W03-54**, titled "YES 45 F-S Alum. Flush Glaze Storefront Sys. (N.I.)", Sheets 1 through 11, 11.1, and 12 through 15 of 15, dated 07/18/03, with revision D dated 09/15/08, prepared by Al-Farooq Corporation, signed and sealed by Humayoun Farooq, P.E.

B. TESTS

1. Test reports on: 1) Air Infiltration Test, per FBC, TAS 202-94
   2) Uniform Static Air Pressure Test, Loading per FBC TAS 202-94
   3) Forced Entry Test, per FBC 3603.2 (b) and TAS 202-94

   along with marked-up drawings and installation diagram of specimen #1 (elevation D) YES45 FS storefront with 20D doors, prepared by Hurricane Test Laboratory, Inc., Test Report No. **HTL-0231-0523-03**, dated 5/14/03, signed and sealed by Vinu J. Abraham, P.E.

   (Submitted under previous NOA#03-0801.04)
2. Test reports on: 1) Air Infiltration Test, per FBC, TAS 202-94
   2) Uniform Static Air Pressure Test, Loading per FBC TAS 202-94
   3) Forced Entry Test, per FBC 3603.2 (b) and TAS 202-94

   along with marked-up drawings and installation diagram of specimen #2 (elevation C1) YES45 FS storefront with 35D doors, prepared by Hurricane Test Laboratory, Inc., Test Report No. **HTL-0231-0306-03**, dated 3/10-11/03, signed and sealed by Vinu J. Abraham, P.E.

   (Submitted under previous NOA#03-0801.04)
3. Test reports on: 1) Air Infiltration Test, per FBC, TAS 202-94
   2) Uniform Static Air Pressure Test, Loading per FBC TAS 202-94
   3) Forced Entry Test, per FBC 3603.2 (b) and TAS 202-94

   along with marked-up drawings and installation diagram of specimen #2 (elevation C) YES45 FS storefront with 35D doors, prepared by Hurricane Test Laboratory, Inc., Test Report No. **HTL-0231-0306-03**, dated 3/10-11/03, signed and sealed by Vinu J. Abraham, P.E.

   (Submitted under previous NOA#03-0801.04)
4. Test reports on: 1) Air Infiltration Test, per FBC, TAS 202-94
   2) Uniform Static Air Pressure Test, Loading per FBC TAS 202-94
   3) Forced Entry Test, per FBC 3603.2 (b) and TAS 202-94

   along with marked-up drawings and installation diagram of specimen #1 (elevation B) YES45 FS storefront with 35D doors, prepared by Hurricane Test Laboratory, Inc., Test Report No. **HTL-0231-0402-03**, dated 4/1/03, signed and sealed by Vinu J. Abraham, P.E.

   (Submitted under previous NOA#03-0801.04)

Manuel Perez, P.E.
Product Control Examiner
NOA No. 08-0715.14
Expiration Date: August 7, 2013
Approval Date: October 23, 2008

5. Test reports on: 1) Air Infiltration Test, per FBC, TAS 202-94
   2) Uniform Static Air Pressure Test, Loading per FBC TAS 202-94
   3) Forced Entry Test, per FBC 3603.2 (b) and TAS 202-94
   along with marked-up drawings and installation diagram of specimen #4 (elevation A) YES45 FS storefront with 35D doors, prepared by Hurricane Test Laboratory, Inc., Test Report No. **HTL-0231-0710-02**, dated 8/9/02, signed and sealed by Vinu J. Abraham, P.E.
   (Submitted under previous NOA#03-0801.04)
6. Test reports on: 1) Air Infiltration Test, per PA 202-94
   2) Uniform Static Air Pressure Test, Loading per PA 202-94
   3) Water Resistance Test, per PA 202-94
   along with installation diagram of an aluminum flush glazed storefront system 8' 0" high x 4'0" mullion spacing, prepared by National Certified Testing Laboratories, Test Report No. **NCTL-210-1872-1, 2, 3 (S)**, dated 09/24/96, signed and sealed by Barry D. Portnoy, P.E.
   (Submitted under previous NOA#96-1029.05

C. CALCULATIONS

1. Anchor verification calculations and structural analysis, complying with FBC-2004 and FBC-2007, prepared by Al-Farooq Corporation, dated 7/3/08, signed and sealed by Humayoun Farooq, P.E.
   Complies with ASTM E1300-02/04

D. QUALITY ASSURANCE

1. Miami Dade Building Code Compliance Office (BCCO).

E. MATERIAL CERTIFICATIONS

1. None

F. STATEMENTS

1. Statement letter of conformance, dated July 2, 2008, signed and sealed by Humayoun Farooq, P.E.
2. Statement letter of no financial interest, dated July 2, 2008, signed and sealed by Humayoun Farooq, P.E.

G. OTHER

1. Notice of Acceptance No. **07-0417.05**, issued to YKK AP America Inc. for their Series "YES 45 FS" Flush Glazed Aluminum Storefront System – N.I., approved on 05/08/08 and expiring on 08/07/08.

Manuel Perez

Manuel Perez, P.E.
Product Control Examiner
NOA No. 08-0715.14
Expiration Date: August 7, 2013
Approval Date: October 23, 2008

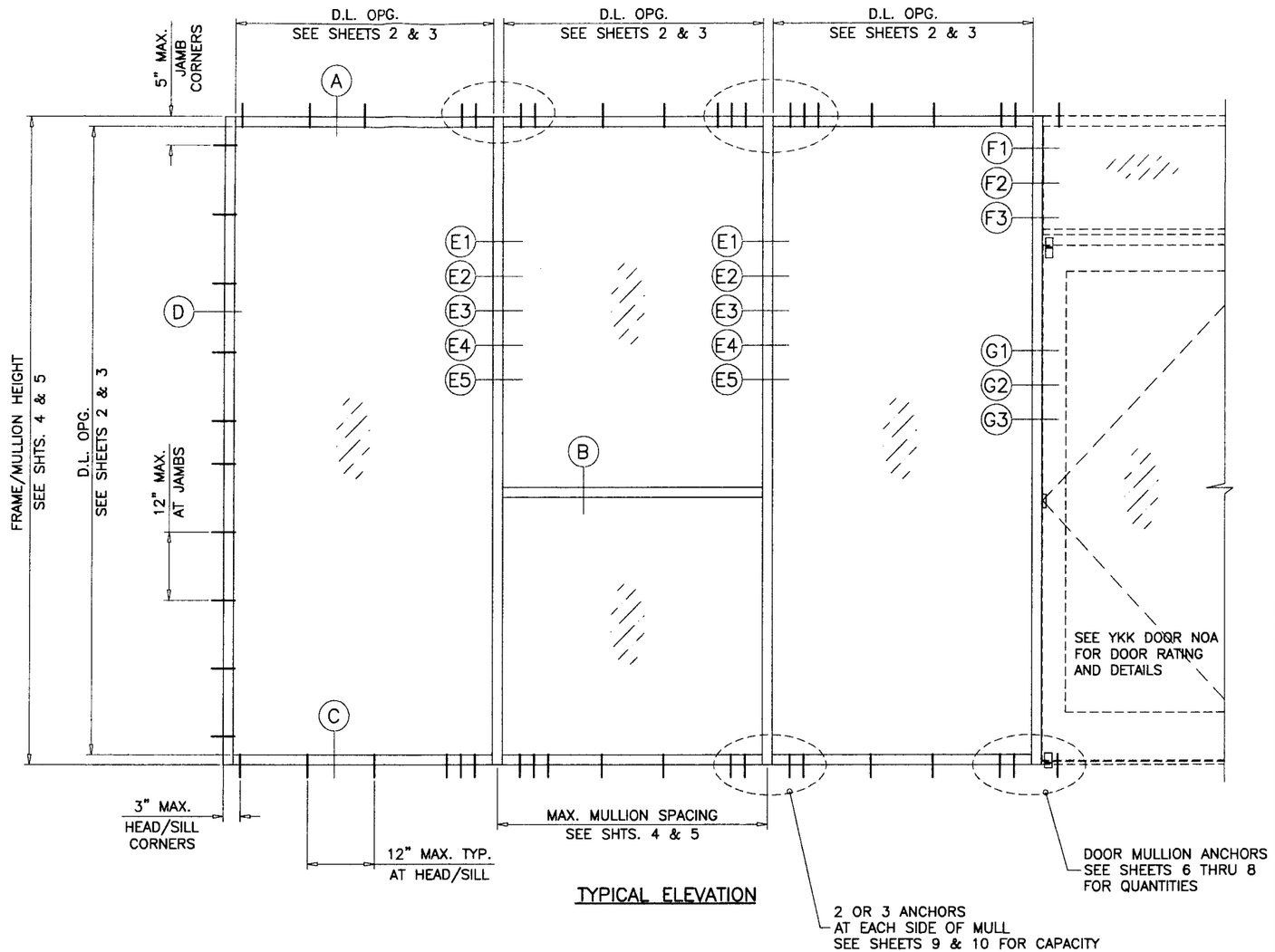

TYPICAL ELEVATION

INSTALLATION OF THIS PRODUCT IN THE HVHZ AREA REQUIRES THE USE OF APPROVED SHUTTERS OR EXTERNAL PROTECTION DEVICES COMPLYING WITH HVHZ REQUIREMENTS.

INSTALLATION OF THIS SYSTEM OUTSIDE THE HVHZ AREA SHALL MEET THE APPLICABLE REQUIREMENTS FOR WIND BORNE DEBRIS PROTECTION.

SERIES YES 45F-S
ALUMINUM FLUSH GLAZED STOREFRONT SYSTEM

THIS SYSTEM MAY BE USED IN CONJUNCTION WITH YKK 20D & 35D MIAMI-DADE COUNTY APPROVED ENTRANCE DOORS.
LOWER DESIGN PRESSURE FROM STOREFRONT OR DOOR APPROVAL WILL APPLY TO ENTIRE SYSTEM.

CODE REQUIREMENTS FOR SAFEGUARDS MUST BE OBSERVED FOR ANY KIND OF GLASS BEING USED.

THIS PRODUCT HAS BEEN DESIGNED AND TESTED TO COMPLY WITH THE REQUIREMENTS OF THE FLORIDA BUILDING CODE 2004/2007 EDITION INCLUDING HIGH VELOCITY HURRICANE ZONE (HVHZ).

WOOD BUCKS BY OTHERS, MUST BE ANCHORED PROPERLY TO TRANSFER LOADS TO THE STRUCTURE.

ANCHORS SHALL BE AS LISTED, SPACED AS SHOWN ON DETAILS, ANCHORS EMBEDMENT TO BASE MATERIAL SHALL BE BEYOND WALL DRESSING OR STUCCO.

ANCHORING OR LOADING CONDITIONS NOT SHOWN IN THESE DETAILS ARE NOT PART OF THIS APPROVAL.

A LOAD DURATION INCREASE IN ALLOWABLE STRESS IS USED IN DESIGN OF ANCHORS INTO WOOD ONLY.

MATERIALS INCLUDING BUT NOT LIMITED TO STEEL/METAL SCREWS, THAT COME INTO CONTACT WITH OTHER DISSIMILAR MATERIALS SHALL MEET THE REQUIREMENTS OF 2004/2007 FLORIDA BLDG. CODE SECTION 2003.8.4.

INSTRUCTIONS:

USE CHARTS AS FOLLOWS.

STEP 1 DETERMINE DESIGN WIND LOAD REQUIREMENT BASED ON WIND VELOCITY, BLDG. HEIGHT, WIND ZONE USING APPLICABLE ASCE 7 STANDARD.

STEP 2 SEE CHARTS ON SHEET 2 AND 3 FOR DESIGN LOAD CAPACITY OF DESIRED GLASS SIZE.

STEP 3 CHECK MULLION CAPACITY FOR A GIVEN SPACING AND HEIGHT USING CHARTS ON SHEET 4 & 5 FOR STOREFRONT MULLION AND SHEETS 6 THRU 8 FOR DOOR MULLION. THE CAPACITY SHOULD EXCEED THE DESIGN LOAD.

STEP 4 USING CHARTS ON SHEET 9 AND 10 FOR STOREFRONT MULLION ANCHOR CAPACITY AND SHEETS 6 THRU 8 FOR DOOR MULLION ANCHOR QUANTITIES SELECT ANCHOR OPTION WITH DESIGN RATING MORE THAN DESIGN LOAD SPECIFIED IN STEP 1 ABOVE.

STEP 5 THE LOWEST VALUE RESULTING FROM STEPS 2, 3 AND 4 SHALL APPLY TO ENTIRE SYSTEM.

MONOLITHIC GLASS
NON-IMPACT

Engr: DR. HUMAYOUN FAROOQI
STRUCTURES
FLA. PE # 16557
C.A.N. 3538

SEP 17 2008

SEP 17 2008

PRODUCT REVIEWED
as complying with the Florida
Building Code
Acceptance No. 08-0715.14
Expiration Date Aug. 7, 2013
By Manuel Perez
Miami-Dade Product Control
Division

AL-FAROOQ CORPORATION
ENGINEERS & PRODUCT DEVELOPMENT
1235 S.W. 87 AVE
MIAMI, FLORIDA 33174
TEL. (305) 264-8100 FAX. (305) 262-6978
STORE\W03-54YKK

YES 45F-S ALUM FLUSH GLAZE STOREFRONT SYS. (N.I.)

YKK AP AMERICA INC.
332 FIRETOWER ROAD
DUBLIN, GEORGIA 31021
TEL.(478) 277-1955 FAX(478) 277-1978

revisions:

no	date	by	description
A	9.18.03		REV. PER BCCO COMMENTS
B	12.02.06		UPDATED FOR 2004 FBC
C	06.25.08		GENERAL REVISION
D	09.15.08		NO CHANGE THIS SHEET

date: 07-18-03
scale: 1/2"=1'-0"
dr. by: HAMID
chk. by:

drawing no.
W03-54

GLASS DESIGN LOAD CAPACITY–PSF		
NOMINAL DIMS		1/4" ANN. GLASS
D.L.O. WIDTH	D.L.O. HEIGHT	EXT. (+) INT. (–)
18"	30"	120.0
21"		120.0
24"		120.0
27"		120.0
30"		120.0
33"		120.0
36"		112.6
39"		104.4
42"		96.9
45"		89.9
48"		83.5
51"		77.7
18"	33"	120.0
21"		120.0
24"		120.0
27"		120.0
30"		120.0
33"		109.6
36"		102.8
39"		96.3
42"		90.0
45"		84.0
48"		78.3
18"	36"	120.0
21"		120.0
24"		120.0
27"		120.0
30"		112.6
33"		102.8
36"		93.7
39"		88.7
42"		83.7
45"		78.8
18"	39"	120.0
21"		120.0
24"		120.0
27"		114.2
30"		104.4
33"		96.3
36"		88.7
39"		81.5
42"		77.7
18"	42"	120.0
21"		120.0
24"		117.4
27"		105.3
30"		96.9
33"		90.0
36"		83.7
39"		77.7

GLASS DESIGN LOAD CAPACITY–PSF		
NOMINAL DIMS		1/4" ANN. GLASS
D.L.O. WIDTH	D.L.O. HEIGHT	EXT. (+) INT. (–)
18"	45"	120.0
21"		120.0
24"		109.1
27"		97.5
30"		89.9
33"		84.0
36"		78.8
18"	48"	120.0
21"		120.0
24"		102.0
27"		90.6
30"		83.5
33"		78.3
18"	51"	120.0
21"		116.6
24"		96.1
27"		84.6
30"		77.7
18"	54"	120.0
21"		112.1
24"		91.3
27"		79.4
30"		72.4
18"	57"	120.0
21"		108.7
24"		87.2
27"		75.0
18"	60"	120.0
21"		105.9
24"		83.8
27"		71.3
18"	63"	120.0
21"		103.7
24"		81.2
18"	66"	120.0
21"		101.9
24"		79.0
18"	69"	120.0
21"		100.5
18"	72"	120.0
21"		99.1
18"	75"	120.0
21"		97.8
18"	78"	120.0
21"		96.5
18"	81"	120.0
18"	84"	120.0

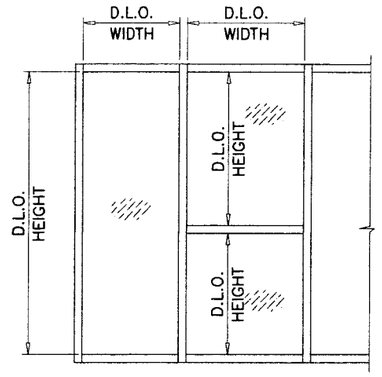

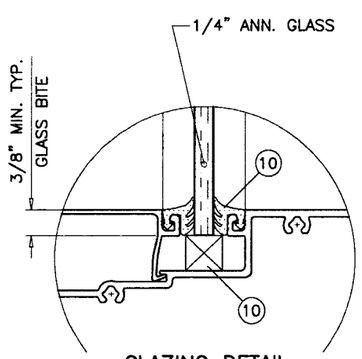

GLAZING DETAIL

GLASS DESIGN LOAD CAPACITY–PSF		
NOMINAL DIMS		1/4" H.S. GLASS
D.L.O. WIDTH	D.L.O. HEIGHT	EXT. (+) INT. (–)
30"	30"	120.0
33"		120.0
36"		120.0
39"		120.0
42"		120.0
45"		120.0
48"		120.0
51"		120.0
54"		120.0
57"		120.0
60"		120.0
63"		120.0
66"		115.5
69"		110.3
72"		106.2
30"	36"	120.0
33"		120.0
36"		120.0
39"		120.0
42"		120.0
45"		120.0
48"		120.0
51"		120.0
54"		120.0
57"		120.0
60"		114.2
63"		107.3
66"		101.1
69"		95.5
72"		90.6
30"	42"	120.0
33"		120.0
36"		120.0
39"		120.0
42"		120.0
45"		120.0
48"		120.0
51"		120.0
54"		119.3
57"		112.9
60"		106.8
63"		100.9
66"		95.5
69"		90.1
72"		85.2

GLASS DESIGN LOAD CAPACITY–PSF		
NOMINAL DIMS		1/4" H.S. GLASS
D.L.O. WIDTH	D.L.O. HEIGHT	EXT. (+) INT. (–)
30"	48"	120.0
33"		120.0
36"		120.0
39"		120.0
42"		120.0
45"		120.0
48"		116.2
51"		112.4
54"		108.3
57"		103.9
60"		99.6
63"		95.0
66"		90.6
69"		86.3
72"		82.2
30"	54"	120.0
33"		120.0
36"		120.0
39"		120.0
42"		119.3
45"		113.9
48"		108.3
51"		102.7
54"		96.8
57"		94.2
60"		91.1
63"		88.1
66"		85.0
69"		81.7
30"	60"	120.0
33"		119.6
36"		114.2
39"		110.3
42"		106.8
45"		103.4
48"		99.6
51"		95.5
54"		91.1
57"		87.0
60"		82.7

GLASS DESIGN LOAD CAPACITY–PSF		
NOMINAL DIMS		1/4" H.S. GLASS
D.L.O. WIDTH	D.L.O. HEIGHT	EXT. (+) INT. (–)
30"	66"	115.5
33"		106.5
36"		101.1
39"		97.8
42"		95.5
45"		93.2
48"		90.6
51"		87.8
54"		85.0
30"	72"	106.2
33"		96.3
36"		90.6
39"		87.3
42"		85.2
45"		83.7
48"		82.2
51"		80.4
30"	78"	99.8
33"		88.8
36"		82.2
39"		78.6
42"		76.5
45"		75.3
30"	84"	95.5
33"		83.2
36"		76.0
39"		71.7
42"		69.4

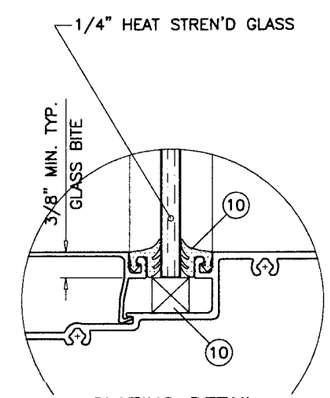

GLAZING DETAIL

NOTE:
GLASS CAPACITIES ON THIS SHEET ARE BASED ON ASTM E1300–02/04 (3 SEC. GUSTS)

Engr: DR. HUMAYOUN FAROOQ
STRUCTURES
FLA. PE # 16557
C.A.N. 3538
SEP 17 2008

PRODUCT REVISED
In compliance with the Florida Building Code
Accepted No. 08-0715.14
Expiration Date: AUG. 7, 2013
By: Manuel Perez
Miami-Dade Product Control Division

AL-FAROOQ CORPORATION
ENGINEERS & PRODUCT DEVELOPMENT
1235 S.W. 87 AVE
MIAMI, FLORIDA 33174
TEL. (305) 264-8100 FAX. (305) 262-6978
STORE\W03-54YKK

YES 45F-S ALUM FLUSH GLAZE STOREFRONT SYS. (N.I.)

YKK AP AMERICA INC.
332 FIRETOWER ROAD
DUBLIN, GEORGIA 31021
TEL(478) 277-1955 FAX(478) 277-1978

revisions:

no	date	by	description
A	9.18.03		NO CHANGE THIS SHEET
B	12.02.06		UPDATED FOR 2004 FBC
C	06.25.08		GENERAL REVISION
D	09.15.08		NO CHANGE THIS SHEET

date: 07-18-03
scale: 1/2" = 1"
dr. by: HAMID
chk. by:

drawing no.
W03-54

GLASS DESIGN LOAD CAPACITY-PSF		
NOMINAL DIMS		1/4" TEMP. GLASS
D.L.O. WIDTH	D.L.O. HEIGHT	EXT. (+) INT. (−)
30"	72"	120.0
33"		120.0
36"		120.0
39"		120.0
42"		120.0
45"		120.0
48"		120.0
51"		120.0
54"		120.0
57"		120.0
60"		120.0
63"		120.0
66"		120.0
69"		120.0
72"		120.0
30"	78"	120.0
33"		120.0
36"		120.0
39"		120.0
42"		120.0
45"		120.0
48"		120.0
51"		120.0
54"		120.0
57"		120.0
60"		120.0
63"		120.0
66"		120.0
69"		120.0
30"	84"	120.0
33"		120.0
36"		120.0
39"		120.0
42"		120.0
45"		120.0
48"		120.0
51"		120.0
54"		120.0
57"		120.0
60"		120.0
63"		120.0

GLASS DESIGN LOAD CAPACITY-PSF		
NOMINAL DIMS		1/4" TEMP. GLASS
D.L.O. WIDTH	D.L.O. HEIGHT	EXT. (+) INT. (−)
30"	90"	120.0
33"		120.0
36"		120.0
39"		120.0
42"		120.0
45"		120.0
48"		120.0
51"		120.0
54"		120.0
57"		119.8
60"		117.8
30"	96"	120.0
33"		120.0
36"		120.0
39"		120.0
42"		117.8
45"		114.2
48"		112.6
51"		111.6
54"		111.1
57"		110.1
30"	102"	120.0
33"		120.0
36"		120.0
39"		118.3
42"		110.6
45"		106.0
48"		103.9
51"		102.9
30"	108"	120.0
33"		120.0
36"		120.0
39"		113.2
42"		104.4
45"		99.3
48"		96.8
30"	114"	120.0
33"		120.0
36"		120.0
39"		109.6
42"		100.4
45"		94.2
48"		90.6

GLASS DESIGN LOAD CAPACITY-PSF		
NOMINAL DIMS		1/4" TEMP. GLASS
D.L.O. WIDTH	D.L.O. HEIGHT	EXT. (+) INT. (−)
30"	120"	120.0
33"		120.0
36"		120.0
39"		107.0
42"		96.8
45"		90.1
30"	126"	120.0
33"		120.0
36"		119.8
39"		105.0
42"		94.2
30"	132"	120.0
33"		120.0
36"		117.8
39"		102.9
30"	138"	120.0
33"		120.0
36"		115.7
39"		100.9

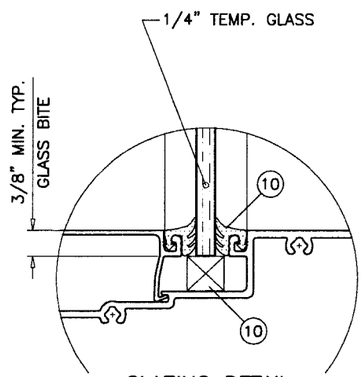

GLAZING DETAIL

NOTE:
GLASS CAPACITIES ON THIS SHEET ARE
BASED ON ASTM E1300-02/04 (3 SEC. GUSTS)

Engr: DR. HUMAYOUN FAROOQ
STRUCTURES
FLA. PE # 16557
C.A.N. 3538
SEP 17 2008

PRODUCT REVISED
Complying with the Florida Building Code
Application No. 08-0715.14
Expiration Date: AUG. 7, 2013
By: Manuel Perez
Miami-Dade Product Control Division

AL-FAROOQ CORPORATION
ENGINEERS & PRODUCT DEVELOPMENT
1235 S.W. 87 AVE
MIAMI, FLORIDA 33174
TEL. (305) 264-8100 FAX. (305) 262-6978
STORE\W03-54YKK

YES 45F-S ALUM FLUSH GLAZE STOREFRONT SYS. (N.I.)

YKK AP AMERICA INC.
332 FIRETOWER ROAD
DUBLIN, GEORGIA 31021
TEL.(478) 277-1955 FAX(478) 277-1978

revisions:

no	date	by	description
A	9.18.03		NO CHANGE THIS SHEET
B	12.02.06		UPDATED FOR 2004 FBC
C	06.25.08		GENERAL REVISION
D	09.15.08		NO CHANGE THIS SHEET

date: 07-18-03
scale: 1/2" = 1"
dr. by: HAMID
chk. by:

drawing no.
W03-54

STOREFRONT MULLION DESIGN LOAD CAPACITY – PSF						
NOMINAL DIMS.		TYPE 'E1'	TYPE 'E2'	TYPE 'E3'	TYPE 'E4'	TYPE 'E5'
WIDTH (W)	FRAME HEIGHT	EXT. (+) INT. (–)	EXT. (+) INT. (–)	EXT. (+) INT. (–)	EXT. (+) INT. (–)	EXT. (+) INT. (–)
24"	72"	120.0	120.0	120.0	120.0	120.0
30"		120.0	120.0	120.0	120.0	120.0
36"		105.2	120.0	120.0	120.0	120.0
42"		93.2	120.0	120.0	120.0	120.0
48"		84.9	120.0	120.0	120.0	120.0
54"		–	120.0	120.0	120.0	120.0
60"		–	120.0	120.0	120.0	120.0
66"		–	117.1	–	120.0	120.0
72"		–	115.8	–	120.0	120.0
78"		–	115.8	–	120.0	120.0
24"	78"	120.0	120.0	120.0	120.0	120.0
30"		102.8	120.0	120.0	120.0	120.0
36"		87.7	120.0	120.0	120.0	120.0
42"		77.2	120.0	120.0	120.0	120.0
48"		–	112.7	111.0	120.0	120.0
54"		–	104.2	102.6	120.0	120.0
60"		–	98.3	–	120.0	120.0
66"		–	94.3	–	120.0	120.0
72"		–	91.9	–	120.0	120.0
24"	84"	107.5	120.0	120.0	120.0	120.0
30"		87.3	120.0	120.0	120.0	120.0
36"		74.1	120.0	117.6	120.0	120.0
42"		65.1	105.9	103.2	120.0	120.0
48"		–	95.3	92.9	120.0	120.0
54"		–	87.5	85.3	120.0	120.0
60"		–	81.9	–	112.7	120.0
66"		–	77.9	–	107.2	120.0
24"	90"	92.5	120.0	120.0	120.0	120.0
30"		75.0	120.0	118.8	120.0	120.0
36"		63.5	104.2	100.6	120.0	120.0
42"		–	91.2	88.0	120.0	120.0
48"		–	81.7	78.9	112.4	120.0
54"		–	74.7	–	102.8	120.0
60"		–	69.5	–	95.6	120.0
24"	96"	80.4	120.0	120.0	120.0	120.0
30"		65.0	107.7	102.9	120.0	120.0
36"		55.0	91.0	87.0	120.0	120.0
42"		–	79.4	75.9	109.2	120.0
48"		–	70.9	67.8	97.6	120.0
54"		–	64.6	–	88.9	113.0
60"		–	59.8	–	82.3	104.7
24"	102"	69.0	117.6	110.8	120.0	120.0
30"		55.9	95.0	89.7	120.0	120.0
36"		–	80.2	75.9	110.3	120.0
42"		–	69.8	66.1	96.0	120.0
48"		–	62.2	–	85.6	108.8
54"		–	56.5	–	77.7	98.8
24"	108"	58.0	104.7	93.1	120.0	120.0
30"		46.9	84.5	75.3	116.3	120.0
36"		–	71.2	63.6	98.0	120.0
42"		–	61.9	55.4	85.1	108.3
48"		–	55.0	–	75.7	96.3
54"		–	49.8	–	–	–

STOREFRONT MULLION DESIGN LOAD CAPACITY – PSF						
NOMINAL DIMS.		TYPE 'E1'	TYPE 'E2'	TYPE 'E3'	TYPE 'E4'	TYPE 'E5'
WIDTH (W)	FRAME HEIGHT	EXT. (+) INT. (–)	EXT. (+) INT. (–)	EXT. (+) INT. (–)	EXT. (+) INT. (–)	EXT. (+) INT. (–)
24"	114"	49.2	93.8	79.0	120.0	120.0
30"		39.8	75.6	63.8	104.1	120.0
36"		–	63.7	53.8	87.6	111.4
42"		–	55.2	–	76.0	96.7
48"		–	49.0	–	67.4	85.8
24"	120"	42.1	84.5	67.6	116.3	120.0
30"		34.0	68.1	54.6	93.7	114.7
36"		–	57.3	46.0	78.8	96.6
42"		–	49.6	–	68.3	83.9
48"		–	44.0	–	60.5	74.6
24"	126"	36.3	76.6	58.3	105.4	120.0
30"		–	61.7	47.0	84.9	98.8
36"		–	51.8	39.6	71.3	83.2
42"		–	44.8	–	61.7	72.1
24"	132"	31.6	69.7	50.7	95.9	106.5
30"		–	56.1	40.8	77.2	85.8
36"		–	47.1	–	64.8	72.1
42"		–	40.7	–	56.0	62.5
24"	138"	27.6	62.0	44.3	87.7	93.1
30"		–	49.9	35.7	70.5	74.9
36"		–	41.9	–	59.2	63.0
42"		–	36.3	–	–	–
24"	144"	24.3	54.5	39.0	77.5	81.8
30"		–	43.9	31.3	62.4	65.9
36"		–	36.8	–	52.4	55.3

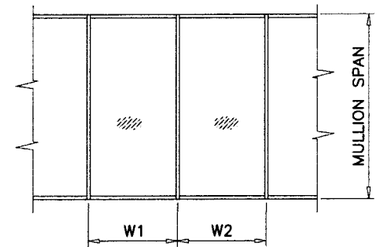

$$\text{WIDTH (W)} = \frac{W1 + W2}{2}$$

MULLION LOAD CHARTS FOR MULLS WITHOUT INTERMEDIATE HORIZONTALS

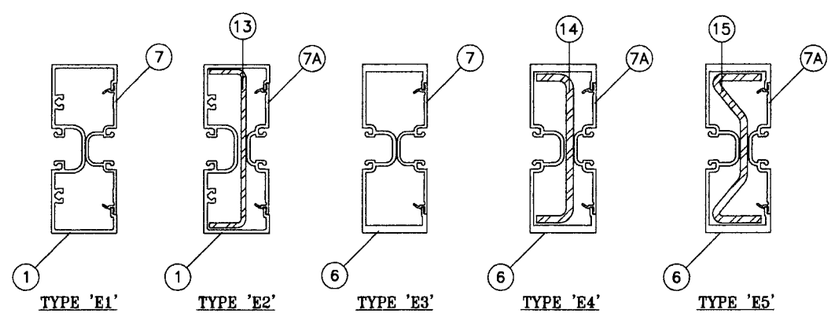

Engr: DR. HUMAYOUN FAROOQ
STRUCTURES
FLA. PE # 16557
C.A.N. 3538
SEP 17 2008

PRODUCT REVIEWED
Product approved for use in Florida
08-0715.14
AUG. 7, 2013
Manuel Perez
Product Control Manager

AL-FAROOQ CORPORATION
ENGINEERS & PRODUCT DEVELOPMENT
1235 S.W. 87 AVE
MIAMI, FLORIDA 33174
TEL. (305) 264-8100 FAX. (305) 262-6978

STORE\W03-54YKK

YES 45F-S ALUM FLUSH GLAZE STOREFRONT SYS. (N.I.)

YKK AP AMERICA INC.
332 FIRETOWER ROAD
DUBLIN, GEORGIA 31021
TEL.(478) 277-1955 FAX(478) 277-1978

revisions:

no	date	by	description
A	9.18.03		NO CHANGE THIS SHEET
B	12.02.06		UPDATED FOR 2004 FBC
C	06.25.08		GENERAL REVISION
D	09.15.08		NO CHANGE THIS SHEET

date: 07-18-03
scale: 1/2"=1'-0"
dr. by: HAMID
chk. by:

drawing no.
W03-54

STOREFRONT MULLION DESIGN LOAD CAPACITY – PSF						
NOMINAL DIMS.		TYPE 'E1'	TYPE 'E2'	TYPE 'E3'	TYPE 'E4'	TYPE 'E5'
WIDTH (W)	FRAME HEIGHT	EXT. (+) INT. (–)	EXT. (+) INT. (–)	EXT. (+) INT. (–)	EXT. (+) INT. (–)	EXT. (+) INT. (–)
24"	72"	120.0	120.0	120.0	120.0	120.0
30"		116.0	120.0	120.0	120.0	120.0
36"		96.7	120.0	120.0	120.0	120.0
42"		82.8	120.0	120.0	120.0	120.0
48"		72.5	115.8	115.2	120.0	120.0
54"		–	102.9	102.4	120.0	120.0
60"		–	92.7	92.2	120.0	120.0
66"		–	84.2	–	115.9	120.0
72"		–	77.2	–	106.2	120.0
78"		–	71.3	–	98.1	120.0
24"	78"	120.0	120.0	120.0	120.0	120.0
30"		97.9	120.0	120.0	120.0	120.0
36"		81.6	120.0	120.0	120.0	120.0
42"		69.9	112.8	111.1	120.0	120.0
48"		–	98.7	97.2	120.0	120.0
54"		–	87.7	86.4	120.0	120.0
60"		–	78.9	–	108.6	120.0
66"		–	71.8	–	98.8	120.0
72"		–	65.8	–	90.5	115.1
24"	84"	104.6	120.0	120.0	120.0	120.0
30"		83.7	120.0	120.0	120.0	120.0
36"		69.7	113.5	110.6	120.0	120.0
42"		59.8	97.2	94.8	120.0	120.0
48"		–	85.1	82.9	117.1	120.0
54"		–	75.6	73.7	104.1	120.0
60"		–	68.1	–	93.7	119.1
66"		–	61.9	–	85.2	108.3
24"	90"	90.6	120.0	120.0	120.0	120.0
30"		72.5	118.6	115.3	120.0	120.0
36"		60.4	98.8	96.1	120.0	120.0
42"		–	84.7	82.3	116.6	120.0
48"		–	74.1	72.0	102.0	120.0
54"		–	65.9	–	90.7	115.3
60"		–	59.3	–	81.6	103.8
24"	96"	79.7	120.0	120.0	120.0	120.0
30"		63.7	104.2	101.3	120.0	120.0
36"		53.1	86.9	84.4	119.5	120.0
42"		–	74.5	72.4	102.5	120.0
48"		–	65.1	63.3	89.6	114.0
54"		–	57.9	–	79.7	101.3
60"		–	52.1	–	71.7	91.2
24"	102"	67.6	115.4	108.6	120.0	120.0
30"		54.1	92.3	86.9	120.0	120.0
36"		–	76.9	72.4	105.9	120.0
42"		–	66.0	62.0	90.8	115.4
48"		–	57.7	–	79.4	101.0
54"		–	51.3	–	70.6	89.8
24"	108"	57.0	102.9	91.5	120.0	120.0
30"		45.6	82.4	73.2	113.3	120.0
36"		–	68.6	61.0	94.4	120.0
42"		–	58.8	52.3	80.9	103.0
48"		–	51.5	–	70.8	90.1
54"		–	45.8	–	–	–

STOREFRONT MULLION DESIGN LOAD CAPACITY – PSF						
NOMINAL DIMS.		TYPE 'E1'	TYPE 'E2'	TYPE 'E3'	TYPE 'E4'	TYPE 'E5'
WIDTH (W)	FRAME HEIGHT	EXT. (+) INT. (–)	EXT. (+) INT. (–)	EXT. (+) INT. (–)	EXT. (+) INT. (–)	EXT. (+) INT. (–)
24"	114"	48.4	92.4	77.8	120.0	120.0
30"		38.8	73.9	62.2	101.7	120.0
36"		–	61.6	51.8	84.8	107.8
42"		–	52.8	–	72.7	92.4
48"		–	46.2	–	63.6	80.9
24"	120"	41.5	83.4	66.7	114.7	120.0
30"		33.2	66.7	53.3	91.8	112.1
36"		–	55.6	44.5	76.5	93.4
42"		–	47.6	–	65.6	80.0
48"		–	41.7	–	57.4	70.0
24"	126"	35.9	75.6	57.6	104.1	120.0
30"		–	60.5	46.1	83.3	96.8
36"		–	50.4	38.4	69.4	80.7
42"		–	43.2	–	59.5	69.1
24"	132"	31.2	68.9	50.1	94.8	105.2
30"		–	55.1	40.1	75.9	84.2
36"		–	45.9	–	63.2	70.2
42"		–	39.4	–	54.2	60.1
24"	138"	27.3	61.3	43.8	86.8	92.1
30"		–	49.1	35.1	69.4	73.7
36"		–	40.9	–	57.8	61.4
42"		–	35.1	–	–	–
24"	144"	24.0	54.0	38.6	76.8	81.1
30"		–	43.2	30.9	61.4	64.9
36"		–	36.0	–	51.2	54.0

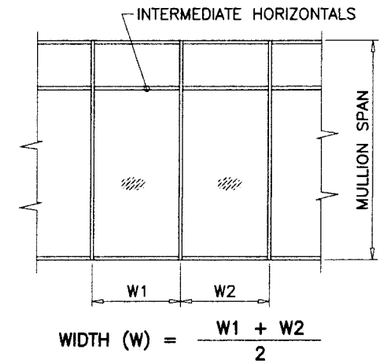

MULLION LOAD CHARTS FOR MULLS WITH INTERMEDIATE HORIZONTALS

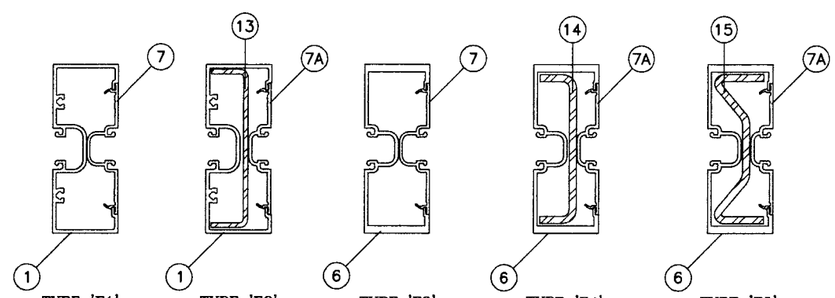

Engr: DR. HUMAYOUN FAROOQ
STRUCTURES
FLA. PE # 16557
C.A.N. 3538

SEP 17 2008

08-0715.14
AUG. 7, 2013

AL-FAROOQ CORPORATION
ENGINEERS & PRODUCT DEVELOPMENT
1235 S.W. 87 AVE
MIAMI, FLORIDA 33174
TEL. (305) 264-8100 FAX. (305) 262-6978

STORE\W03-54YKK

YES 45F-S ALUM FLUSH GLAZE STOREFRONT SYS. (N.I.)

YKK AP AMERICA INC.
332 FIRETOWER ROAD
DUBLIN, GEORGIA 31021
TEL(478) 277-1955 FAX(478) 277-1978

revisions:

no	date	by	description
A	9.18.03		NO CHANGE THIS SHEET
B	12.02.06		UPDATED FOR 2004 FBC
C	06.25.08		GENERAL REVISION
D	09.15.08		NO CHANGE THIS SHEET

date: 07-18-03
scale: 1/2"=1'-0"
dr. by: HAMID
chk. by:

drawing no.
W03-54

DOOR MULLION LOAD CAPACITY-PSF				
WIDTH (W) INCHES	LENGTH-L INCHES	TYPE 'G1' EXT.(+) INT.(-)	TYPE 'G2' EXT.(+) INT.(-)	TYPE 'G3' EXT.(+) INT.(-)
30"	81-3/4"	83.3	100.0	100.0
36"		69.4	100.0	100.0
42"		59.5	89.0	100.0
48"		–	77.9	90.1
54"		–	69.2	80.1
30"	85-3/4"	78.7	100.0	100.0
36"		65.6	94.4	100.0
42"		–	80.9	98.2
48"		–	70.8	85.9
54"		–	62.9	76.4
30"	91-3/4"	64.3	98.9	100.0
36"		53.6	82.4	100.0
42"		–	70.7	91.8
48"		–	61.8	80.3
54"		–	55.0	71.4
30"	97-3/4"	53.1	87.2	100.0
36"		–	72.6	99.8
42"		–	62.3	85.6
48"		–	54.5	74.9
51-7/8"		–	50.4	69.3

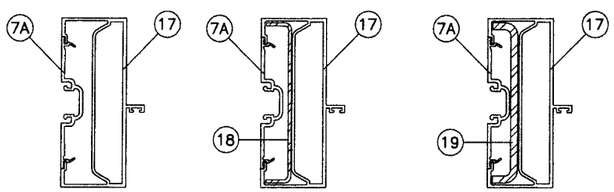

TYPE 'G1'
NO REINFORCING

TYPE 'G2'
LIGHT REINFORCING

TYPE 'G3'
HEAVY REINFORCING

DOUBLE DOOR

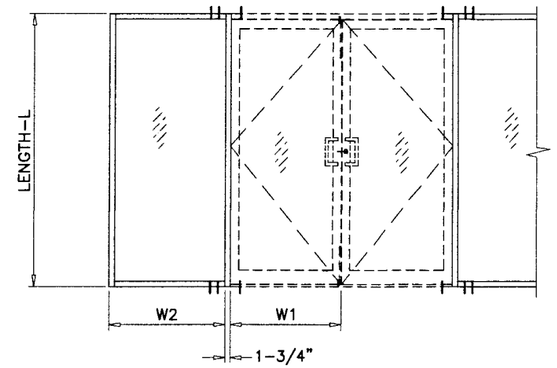

NO REINFORCING

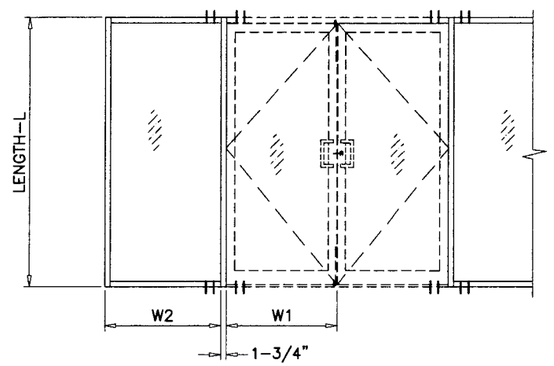

LIGHT REINFORCING

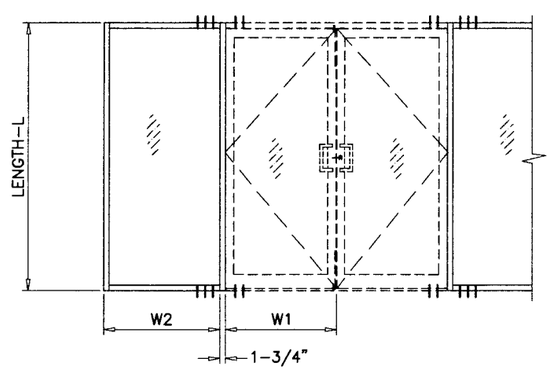

HEAVY REINFORCING

SINGLE DOOR

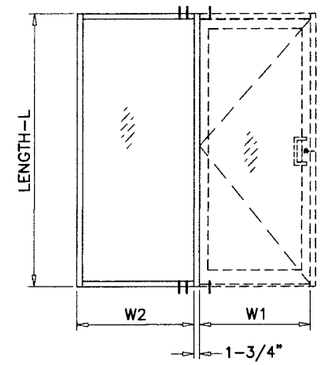

NO REINFORCING

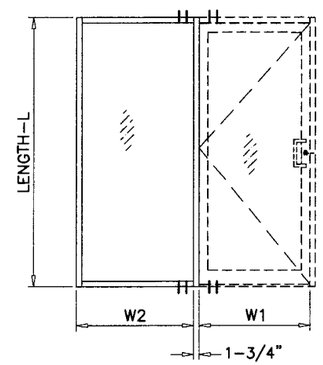

LIGHT REINFORCING

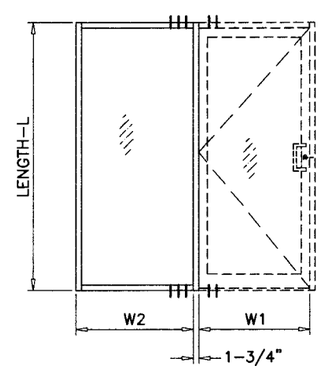

HEAVY REINFORCING

SINGLE DOOR W/ TRANSOM

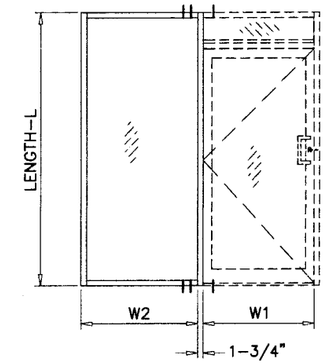

NO REINFORCING

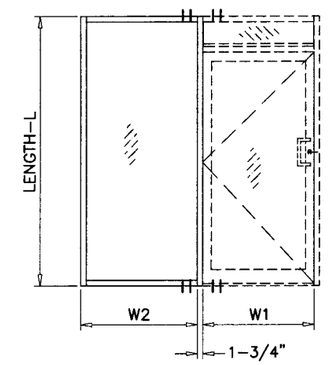

LIGHT REINFORCING

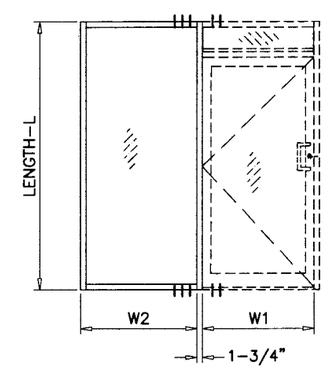

HEAVY REINFORCING

$$\text{WIDTH (W)} = \frac{W1 + W2}{2} + 1\ 3/4"$$

ELEVATIONS ABOVE SHOWS NUMBER OF ANCHORS REQD. AT HEAD/SILL OF DOOR MULLION FOR VARIOUS CONFIGURATIONS.
SEE SHEET 11.1 FOR DETAIL.

Engr: DR. HUMAYOUN FAROOQ
STRUCTURES
FLA. PE # 16557
C.A.N. 3538

SEP 17 2008

PRODUCT REVISED
As complying with the Florida Building Code
Acceptance No. OB-0715.14
Expiration Date AUG. 7, 2013
By Manuel Sera
Miami-Dade Product Control Division

AL-FAROOQ CORPORATION
ENGINEERS & PRODUCT DEVELOPMENT
1235 S.W. 87 AVE
MIAMI, FLORIDA 33174
TEL. (305) 264-8100 FAX. (305) 262-6978

STORE\W03-54YKK

YES 45F-S ALUM FLUSH GLAZE STOREFRONT SYS. (N.I.)

YKK AP AMERICA INC.
332 FIRETOWER ROAD
DUBLIN, GEORGIA 31021
TEL.(478) 277-1955 FAX(478) 277-1978

revisions:

no	date	by	description
C	06.25.08		GENERAL REVISION
D	09.15.08		REV. PER BCCO COMMENTS

date: 07-18-03
scale: 1/2"=1'-0"
dr. by: HAMID
chk. by:

drawing no.
W03-54

MULLION LOAD CAPACITY-PSF (LIGHT REINFORCING)

WIDTH-W1 INCHES	WIDTH-W2 INCHES	LENGTH-L INCHES	80" MIN. DOOR HT. EXT. (+) INT. (−)	84" MIN. DOOR HT. EXT. (+) INT. (−)	90" MIN. DOOR HT. EXT. (+) INT. (−)	96" MIN. DOOR HT. EXT. (+) INT. (−)
60"	30"	102"	67.3	69.7	73.5	77.1
	36"		62.4	64.4	67.6	71.1
	42"		58.1	59.9	62.6	65.6
	48"		54.4	55.9	58.3	60.9
	54"		51.1	52.5	54.6	56.8
	60"		48.2	49.4	51.3	53.2
66"	30"		63.6	66.0	69.7	72.4
	36"		59.2	61.2	64.4	67.9
	42"		55.3	57.1	59.9	62.8
	48"		52.0	53.5	55.9	58.5
	54"		49.0	50.3	52.4	54.7
	60"		46.3	47.5	49.4	51.4
72"	30"		60.3	62.6	66.3	68.2
	36"		56.3	58.3	61.5	64.4
	42"		52.8	54.6	57.4	60.3
	48"		49.7	51.3	53.7	56.3
	54"		47.0	48.4	50.5	52.8
	60"		44.5	45.7	47.7	49.7
84"	30"		54.5	56.8	60.4	61.2
	36"		51.3	53.2	56.4	58.1
	42"		48.4	50.1	52.9	55.4
	48"		45.8	47.3	49.8	52.4
60"	30"	108"	57.8	59.7	62.7	65.9
	36"		53.7	55.3	57.9	60.7
	42"		50.2	51.6	53.8	56.1
	48"		47.1	48.3	50.2	52.3
	54"		44.3	45.4	47.1	48.9
	60"		41.9	42.9	44.3	45.9
66"	30"		54.5	56.4	59.4	62.6
	36"		50.9	52.5	55.0	57.8
	42"		47.7	49.1	51.3	53.7
	48"		44.9	46.1	48.1	50.1
	54"		42.4	43.5	45.2	47.0
	60"		40.2	41.1	42.6	44.2
72"	30"		51.6	53.4	56.4	59.5
	36"		48.3	49.9	52.4	55.2
	42"		45.4	46.8	49.1	51.4
	48"		42.9	44.1	46.1	48.2
	54"		40.6	41.7	43.5	45.3
84"	30"		46.6	48.3	51.2	54.2
	36"		43.9	45.4	47.9	50.6
	42"		41.5	42.9	45.1	47.4

MULLION LOAD CAPACITY-PSF (LIGHT REINFORCING)

WIDTH-W1 INCHES	WIDTH-W2 INCHES	LENGTH-L INCHES	80" MIN. DOOR HT. EXT. (+) INT. (−)	84" MIN. DOOR HT. EXT. (+) INT. (−)	90" MIN. DOOR HT. EXT. (+) INT. (−)	96" MIN. DOOR HT. EXT. (+) INT. (−)
60"	30"	114"	50.1	51.7	54.1	56.7
	36"		46.8	48.1	50.1	52.3
	42"		43.8	44.9	46.7	48.6
	48"		41.1	42.2	43.7	45.3
	54"		38.8	39.7	41.1	42.5
	60"		36.7	37.5	38.7	40.0
66"	30"		47.3	48.8	51.1	53.7
	36"		44.2	45.5	47.6	49.8
	42"		41.5	42.7	44.5	46.4
	48"		39.2	40.2	41.8	43.4
	54"		37.1	38.0	39.3	40.8
72"	30"		44.6	46.1	48.5	51.0
	36"		41.9	43.2	45.3	47.4
	42"		39.5	40.7	42.4	44.4
	48"		37.4	38.4	40.0	41.6
84"	30"		40.2	41.6	43.9	46.3
	36"		38.0	39.3	41.2	43.4
60"	30"	120"	44.0	45.2	47.2	49.3
	36"		41.1	42.1	43.8	45.6
	42"		38.5	39.5	40.9	42.5
	48"		36.3	37.1	38.4	39.7
	54"		34.3	35.0	36.1	37.3
66"	30"		41.3	42.6	44.5	46.6
	36"		38.8	39.8	41.5	43.3
	42"		36.5	37.5	38.9	40.5
	48"		34.5	35.3	36.6	38.0
72"	30"		39.0	40.2	42.1	44.2
	36"		36.7	37.8	39.5	41.2
	42"		34.7	35.6	37.1	38.6
84"	30"		35.1	36.2	38.1	40.0

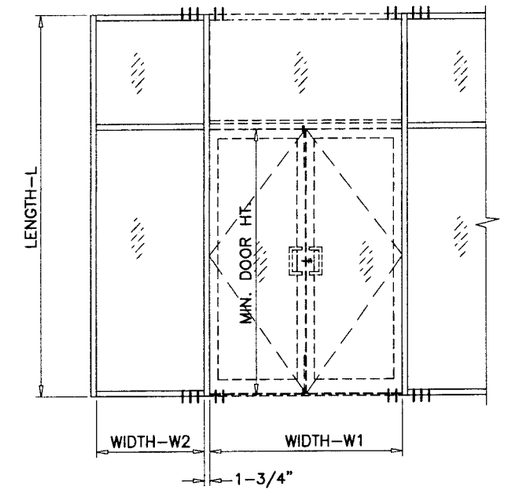

DOUBLE DOOR W/ TRANSOM

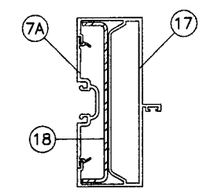

TYPE 'G2'
LIGHT REINFORCING

ELEVATIONS ABOVE SHOWS NUMBER OF ANCHORS REQD. AT HEAD/SILL OF DOOR MULLION FOR VARIOUS CONFIGURATIONS.
SEE SHEET 11.1 FOR DETAIL.

Engr: DR. HUMA'OUN FARCOO
STRUCTURES
FLA. PE # 16557
C.A.N. 3538

SEP 17 2008

PRODUCT REVISED
as complying with the Florida Building Code
Acceptance No. 08-0715.14
Expiration Date AUG. 7, 2013
By Manuel Perez
Miami-Dade Product Control Division

AL-FAROOQ CORPORATION
ENGINEERS & PRODUCT DEVELOPMENT
1235 S.W. 87 AVE
MIAMI, FLORIDA 33174
TEL. (305) 264-8100 FAX. (305) 262-6978
STORE\W03-54YKK

YES 45F-S ALUM FLUSH GLAZE STOREFRONT SYS. (N.I.)

YKK AP AMERICA INC.
332 FIRETOWER ROAD
DUBLIN, GEORGIA 31021
TEL.(478) 277-1955 FAX(478) 277-1978

revisions:			
no	date	by	description
C	06.25.08		GENERAL REVISION
D	09.15.08		REV. PER BCCO COMMENTS

date: 07-18-03
scale: 1/2"=1'-0"
dr. by: HAMID
chk. by:

drawing no.
W03-54

MULLION LOAD CAPACITY-PSF (HEAVY REINFORCING)

WIDTH-W1 INCHES	WIDTH-W2 INCHES	LENGTH-L INCHES	80" MIN. DOOR HT. EXT. (+) INT. (-)	84" MIN. DOOR HT. EXT. (+) INT. (-)	90" MIN. DOOR HT. EXT. (+) INT. (-)	96" MIN. DOOR HT. EXT. (+) INT. (-)
60"	30"	102"	100.0	100.0	100.0	100.0
	36"		100.0	100.0	98.9	97.1
	42"		95.8	94.6	93.0	91.4
	48"		90.2	89.2	87.7	86.3
	54"		85.3	84.4	83.0	81.7
	60"		80.8	80.0	78.8	77.7
66"	30"		100.0	100.0	99.3	97.3
	36"		96.4	95.1	93.3	91.5
	42"		90.8	89.7	88.0	86.4
	48"		85.8	84.8	83.3	81.9
	54"		81.3	80.4	79.1	77.8
	60"		77.2	76.4	75.2	74.1
72"	30"		97.1	95.7	93.6	91.7
	36"		91.4	90.1	88.3	86.6
	42"		86.3	85.2	83.6	82.0
	48"		81.7	80.7	79.3	77.9
	54"		77.7	76.8	75.4	74.2
	60"		74.0	73.1	71.9	70.8
84"	30"		87.3	86.0	84.1	82.3
	36"		82.7	81.5	79.8	78.1
	42"		78.5	77.4	75.9	74.4
	48"		74.7	73.8	72.3	71.0
	54"		71.3	70.4	69.1	67.9
60"	30"	108"	100.0	100.0	100.0	99.5
	36"		97.3	96.6	94.9	93.2
	42"		90.9	90.6	89.1	87.6
	48"		85.3	85.4	84.0	82.7
	54"		80.3	80.7	79.5	78.3
	60"		75.9	76.5	75.4	74.3
66"	30"		98.7	97.3	95.4	93.5
	36"		92.2	91.3	89.6	87.9
	42"		86.4	85.9	84.4	83.0
	48"		81.4	81.2	79.8	78.5
	54"		76.8	76.9	75.7	74.5
	60"		72.8	73.1	72.0	70.9
72"	30"		93.2	91.9	90.0	88.2
	36"		87.6	86.5	84.8	83.2
	42"		82.3	81.7	80.2	78.7
	48"		77.7	77.4	76.0	74.7
	54"		73.6	73.5	72.3	71.1
	60"		69.9	70.0	68.9	67.8
84"	30"		83.9	82.7	80.9	79.2
	36"		79.4	78.3	76.7	75.2
	42"		75.3	74.3	72.9	71.5
	48"		71.4	70.7	69.4	68.2

MULLION LOAD CAPACITY-PSF (HEAVY REINFORCING)

WIDTH-W1 INCHES	WIDTH-W2 INCHES	LENGTH-L INCHES	80" MIN. DOOR HT. EXT. (+) INT. (-)	84" MIN. DOOR HT. EXT. (+) INT. (-)	90" MIN. DOOR HT. EXT. (+) INT. (-)	96" MIN. DOOR HT. EXT. (+) INT. (-)
60"	30"	114"	87.9	89.9	93.3	95.8
	36"		81.9	83.5	86.5	89.6
	42"		76.6	78.0	80.6	83.8
	48"		71.9	73.2	75.5	78.2
	54"		67.8	68.9	71.0	73.4
	60"		64.1	65.1	67.0	69.1
66"	30"		82.9	84.8	88.2	90.1
	36"		77.5	79.1	82.1	84.6
	42"		72.7	74.2	76.8	79.7
	48"		68.5	69.8	72.1	74.8
	54"		64.8	65.9	68.0	70.4
	60"		61.4	62.4	64.3	66.4
72"	30"		78.4	80.2	83.6	85.0
	36"		73.5	75.2	78.1	80.1
	42"		69.2	70.7	73.2	75.7
	48"		65.4	66.7	69.0	71.7
	54"		62.0	63.1	65.2	67.6
84"	30"		70.8	72.5	75.7	76.4
	36"		66.8	68.3	71.1	72.4
	42"		63.2	64.6	67.1	68.8
60"	30"	120"	74.0	75.3	77.7	80.7
	36"		69.0	70.1	72.2	74.8
	42"		64.6	65.6	67.4	69.6
	48"		60.7	61.6	63.2	65.2
	54"		57.3	58.1	59.5	61.2
	60"		54.2	54.9	56.2	57.7
66"	30"		69.7	71.0	73.4	76.3
	36"		65.2	66.4	68.4	70.9
	42"		61.3	62.3	64.1	66.3
	48"		57.8	58.7	60.3	62.2
	54"		54.7	55.5	56.9	58.7
72"	30"		65.9	67.2	69.5	72.3
	36"		61.9	63.0	65.0	67.5
	42"		58.3	59.3	61.1	63.3
	48"		55.2	56.0	57.6	59.6
84"	30"		59.4	60.6	62.8	65.5
	36"		56.1	57.2	59.2	61.5

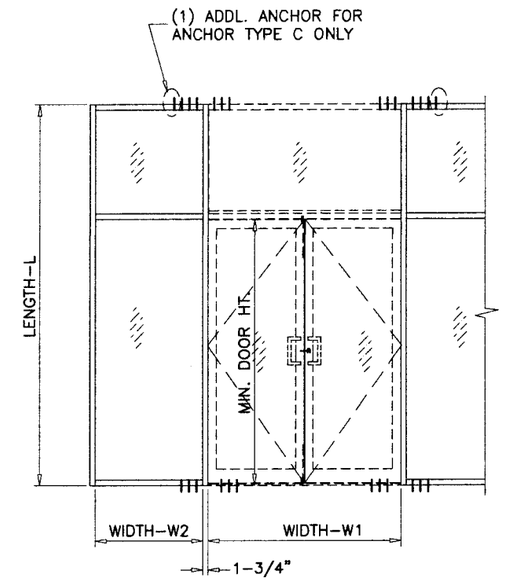

DOUBLE DOOR W/ TRANSOM

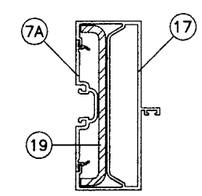

TYPE 'G3'
HEAVY REINFORCING

ELEVATIONS ABOVE SHOWS NUMBER OF ANCHORS REQD. AT HEAD/SILL OF DOOR MULLION FOR VARIOUS CONFIGURATIONS.
SEE SHEET 11.1 FOR DETAIL.

Engr: DR. HUMAYOUN FAROOQ
STRUCTURES
FLA. PE # 16557
C.A.N. 3538

SEP 17 2008

PRODUCT REVISED
as complying with the Florida Building Code
Acceptance No. 08-0715.14
Expiration Date AUG. 7, 2013
By Miami-Dade Product Control Division

AL-FAROOQ CORPORATION
ENGINEERS & PRODUCT DEVELOPMENT
1235 S.W. 87 AVE
MIAMI, FLORIDA 33174
TEL. (305) 264-8100 FAX. (305) 262-6978

STORE\W03-54YKK

YES 45F-S ALUM FLUSH GLAZE STOREFRONT SYS. (N.I.)

YKK AP AMERICA INC.
332 FIRETOWER ROAD
DUBLIN, GEORGIA 31021
TEL.(478) 277-1955 FAX(478) 277-1978

revisions:

no	date	by	description
C	06.25.08		GENERAL REVISION
D	09.15.08		REV. PER BCCO COMMENTS

date: 07-18-03
scale: 1/2"=1'-0"
dr. by: HAMID
chk. by:

drawing no.
W03-54

ANCHOR LOAD CAPACITY – PSF
EXT.(+) & INT.(–)

NOMINAL DIMS.		3/8" SHIM SPACE			1/4" SHIM SPACE			3/8" SHIM SPACE			1/4" SHIM SPACE		
		ANCHOR TYPE			ANCHOR TYPE			ANCHOR TYPE			ANCHOR TYPE		
WIDTH (W)	FRAME HEIGHT	A2	B2	C2	A2	B2	C2	A3	B3	C3	A3	B3	C3
24"	72"	120.0	120.0	120.0	120.0	120.0	120.0	120.0	120.0	120.0	120.0	120.0	120.0
30"		120.0	120.0	120.0	120.0	120.0	120.0	120.0	120.0	120.0	120.0	120.0	120.0
36"		120.0	120.0	120.0	120.0	120.0	120.0	120.0	120.0	120.0	120.0	120.0	120.0
42"		120.0	120.0	120.0	120.0	120.0	120.0	120.0	120.0	120.0	120.0	120.0	120.0
48"		120.0	120.0	120.0	120.0	120.0	120.0	120.0	120.0	120.0	120.0	120.0	120.0
54"		120.0	120.0	120.0	120.0	120.0	120.0	120.0	120.0	120.0	120.0	120.0	120.0
60"		120.0	120.0	116.6	120.0	120.0	120.0	120.0	120.0	120.0	120.0	120.0	120.0
66"		120.0	120.0	114.1	120.0	120.0	120.0	120.0	120.0	120.0	120.0	120.0	120.0
72"		120.0	120.0	113.3	120.0	120.0	120.0	120.0	120.0	120.0	120.0	120.0	120.0
78"		120.0	120.0	113.3	120.0	120.0	120.0	120.0	120.0	120.0	120.0	120.0	120.0
24"	78"	120.0	120.0	120.0	120.0	120.0	120.0	120.0	120.0	120.0	120.0	120.0	120.0
30"		120.0	120.0	120.0	120.0	120.0	120.0	120.0	120.0	120.0	120.0	120.0	120.0
36"		120.0	120.0	120.0	120.0	120.0	120.0	120.0	120.0	120.0	120.0	120.0	120.0
42"		120.0	120.0	120.0	120.0	120.0	120.0	120.0	120.0	120.0	120.0	120.0	120.0
48"		120.0	120.0	113.3	120.0	120.0	120.0	120.0	120.0	120.0	120.0	120.0	120.0
54"		120.0	120.0	106.7	120.0	120.0	120.0	120.0	120.0	120.0	120.0	120.0	120.0
60"		116.8	119.2	102.0	116.8	120.0	120.0	120.0	120.0	120.0	120.0	120.0	120.0
66"		113.3	115.6	98.9	113.3	120.0	120.0	120.0	120.0	120.0	120.0	120.0	120.0
72"		111.2	113.5	97.1	111.2	120.0	120.0	120.0	120.0	120.0	120.0	120.0	120.0
24"	84"	120.0	120.0	120.0	120.0	120.0	120.0	120.0	120.0	120.0	120.0	120.0	120.0
30"		120.0	120.0	120.0	120.0	120.0	120.0	120.0	120.0	120.0	120.0	120.0	120.0
36"		120.0	120.0	120.0	120.0	120.0	120.0	120.0	120.0	120.0	120.0	120.0	120.0
42"		120.0	120.0	111.0	120.0	120.0	120.0	120.0	120.0	120.0	120.0	120.0	120.0
48"		116.8	119.2	102.0	116.8	120.0	120.0	120.0	120.0	120.0	120.0	120.0	120.0
54"		109.3	111.5	95.4	109.3	120.0	120.0	120.0	120.0	120.0	120.0	120.0	120.0
60"		103.8	106.0	90.7	103.8	120.0	120.0	120.0	120.0	120.0	120.0	120.0	120.0
66"		99.9	102.0	87.3	99.9	120.0	120.0	120.0	120.0	120.0	120.0	120.0	120.0
24"	90"	120.0	120.0	120.0	120.0	120.0	120.0	120.0	120.0	120.0	120.0	120.0	120.0
30"		120.0	120.0	120.0	120.0	120.0	120.0	120.0	120.0	120.0	120.0	120.0	120.0
36"		120.0	120.0	113.3	120.0	120.0	120.0	120.0	120.0	120.0	120.0	120.0	120.0
42"		116.1	118.5	101.4	116.1	120.0	120.0	120.0	120.0	120.0	120.0	120.0	120.0
48"		106.2	108.4	92.7	106.2	120.0	120.0	120.0	120.0	120.0	120.0	120.0	120.0
54"		98.9	100.9	86.3	98.9	120.0	120.0	120.0	120.0	120.0	120.0	120.0	120.0
60"		93.4	95.4	81.6	93.4	120.0	120.0	120.0	120.0	120.0	120.0	120.0	120.0
24"	96"	120.0	120.0	120.0	120.0	120.0	120.0	120.0	120.0	120.0	120.0	120.0	120.0
30"		120.0	120.0	120.0	120.0	120.0	120.0	120.0	120.0	120.0	120.0	120.0	120.0
36"		119.8	120.0	104.6	119.8	120.0	120.0	120.0	120.0	120.0	120.0	120.0	120.0
42"		106.8	109.0	93.3	106.8	120.0	120.0	120.0	120.0	120.0	120.0	120.0	120.0
48"		97.3	99.3	85.0	97.3	120.0	120.0	120.0	120.0	120.0	120.0	120.0	120.0
54"		90.3	92.1	78.8	90.3	120.0	120.0	120.0	120.0	118.3	120.0	120.0	120.0
60"		84.9	86.7	74.2	84.9	120.0	114.9	120.0	120.0	111.3	120.0	120.0	120.0
24"	102"	120.0	120.0	120.0	120.0	120.0	120.0	120.0	120.0	120.0	120.0	120.0	120.0
30"		120.0	120.0	112.6	120.0	120.0	120.0	120.0	120.0	120.0	120.0	120.0	120.0
36"		111.2	113.5	97.1	111.2	120.0	120.0	120.0	120.0	120.0	120.0	120.0	120.0
42"		98.9	100.9	86.3	98.9	120.0	120.0	120.0	120.0	120.0	120.0	120.0	120.0
48"		89.8	91.7	78.5	89.8	120.0	120.0	120.0	120.0	117.7	120.0	120.0	120.0
54"		83.1	84.8	72.5	83.1	120.0	112.4	120.0	120.0	108.8	120.0	120.0	120.0
24"	108"	120.0	120.0	120.0	120.0	120.0	120.0	120.0	120.0	120.0	120.0	120.0	120.0
30"		120.0	120.0	105.3	120.0	120.0	120.0	120.0	120.0	120.0	120.0	120.0	120.0
36"		103.8	106.0	90.7	103.8	120.0	120.0	120.0	120.0	120.0	120.0	120.0	120.0
42"		92.1	94.0	80.4	92.1	120.0	120.0	120.0	120.0	120.0	120.0	120.0	120.0
48"		83.4	85.1	72.9	83.4	120.0	112.9	120.0	120.0	109.3	120.0	120.0	120.0
54"		76.9	78.5	67.2	76.9	117.2	104.0	115.4	117.7	100.7	115.4	120.0	120.0

ANCHOR LOAD CAPACITY – PSF
EXT.(+) & INT.(–)

NOMINAL DIMS.		3/8" SHIM SPACE			1/4" SHIM SPACE			3/8" SHIM SPACE			1/4" SHIM SPACE		
		ANCHOR TYPE			ANCHOR TYPE			ANCHOR TYPE			ANCHOR TYPE		
WIDTH (W)	FRAME HEIGHT	A2	B2	C2	A2	B2	C2	A3	B3	C3	A3	B3	C3
24"	114"	120.0	120.0	120.0	120.0	120.0	120.0	120.0	120.0	120.0	120.0	120.0	120.0
30"		113.3	115.6	98.9	113.3	120.0	120.0	120.0	120.0	120.0	120.0	120.0	120.0
36"		97.3	99.3	85.0	97.3	120.0	120.0	120.0	120.0	120.0	120.0	120.0	120.0
42"		86.1	87.9	75.2	86.1	120.0	116.5	120.0	120.0	112.8	120.0	120.0	120.0
48"		77.9	79.5	68.0	77.9	118.7	105.3	116.8	119.2	102.0	116.8	120.0	120.0
24"	120"	120.0	120.0	113.3	120.0	120.0	120.0	120.0	120.0	120.0	120.0	120.0	120.0
30"		106.8	109.0	93.3	106.8	120.0	120.0	120.0	120.0	120.0	120.0	120.0	120.0
36"		91.6	93.5	80.0	91.6	120.0	120.0	120.0	120.0	120.0	120.0	120.0	120.0
42"		80.9	82.6	70.6	80.9	120.0	109.4	120.0	120.0	106.0	120.0	120.0	120.0
48"		73.0	74.5	63.8	73.0	111.3	98.8	109.5	111.8	95.6	109.5	120.0	120.0
24"	126"	120.0	120.0	107.4	120.0	120.0	120.0	120.0	120.0	120.0	120.0	120.0	120.0
30"		101.0	103.1	88.2	101.0	120.0	120.0	120.0	120.0	120.0	120.0	120.0	120.0
36"		86.5	88.3	75.6	86.5	120.0	117.0	120.0	120.0	113.3	120.0	120.0	120.0
42"		76.3	77.8	66.6	76.3	116.2	103.2	114.4	116.8	99.9	114.4	120.0	120.0
24"	132"	116.8	119.2	102.0	116.8	120.0	120.0	120.0	120.0	120.0	120.0	120.0	120.0
30"		95.8	97.8	83.7	95.8	120.0	120.0	120.0	120.0	120.0	120.0	120.0	120.0
36"		82.0	83.6	71.6	82.0	120.0	110.9	120.0	120.0	107.4	120.0	120.0	120.0
42"		72.2	73.6	63.0	72.2	110.0	97.6	108.2	110.5	94.5	108.2	120.0	120.0
24"	138"	111.2	113.5	97.1	111.2	120.0	120.0	120.0	120.0	120.0	120.0	120.0	120.0
30"		91.2	93.0	79.6	91.2	120.0	120.0	120.0	120.0	119.4	120.0	120.0	120.0
36"		77.9	79.5	68.0	77.9	118.7	105.3	116.8	119.2	102.0	116.8	120.0	120.0
42"		68.5	69.9	59.8	68.5	104.3	92.6	102.7	104.8	89.7	102.7	120.0	120.0
24"	144"	106.2	108.4	92.7	106.2	120.0	120.0	120.0	120.0	120.0	120.0	120.0	120.0
30"		86.9	88.7	75.9	86.9	120.0	117.6	120.0	120.0	113.9	120.0	120.0	120.0
36"		74.2	75.7	64.8	74.2	113.0	100.3	111.2	113.5	97.1	111.2	120.0	120.0

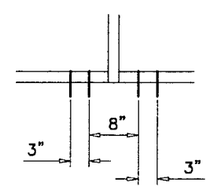

A2, B2, C2

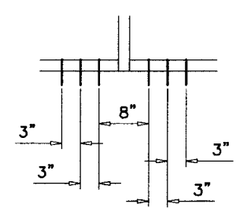

A3, B3, C3

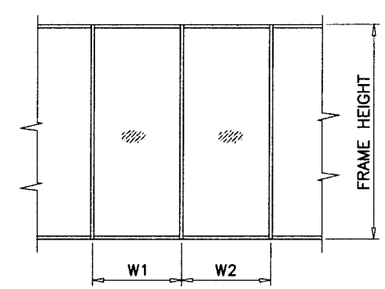

$$\text{WIDTH (W)} = \frac{W1 + W2}{2}$$

ANCHOR LOAD CHARTS FOR MULLS WITHOUT INTERMEDIATE HORIZONTALS

ANCHORS TYPES: SEE SHEET 11 FOR DESCRIPTION

A2 = (2) ANCHORS TYPE 'A' AT EACH SIDE OF MULLION
B2 = (2) ANCHORS TYPE 'B' AT EACH SIDE OF MULLION
C2 = (2) ANCHORS TYPE 'C' AT EACH SIDE OF MULLION

A3 = (3) ANCHORS TYPE 'A' AT EACH SIDE OF MULLION
B3 = (3) ANCHORS TYPE 'B' AT EACH SIDE OF MULLION
C3 = (3) ANCHORS TYPE 'C' AT EACH SIDE OF MULLION

ALL OTHER ANCHORS TO BE SPACED AS PER ELEVATION.

Engr: DR. HUMAYOUN FAROOQ
STRUCTURES
FLA. PE # 16557
C.A.N. 3538

SEP 17 2008

PRODUCT REVISED
as complying with the Florida Building Code
Acceptance No. 08-0715.14
Expiration Date AUG. 7, 2013
By Manuel Perez
Miami-Dade Product Control Division

AL-FAROOQ CORPORATION
ENGINEERS & PRODUCT DEVELOPMENT
1235 S.W. 87 AVE
MIAMI, FLORIDA 33174
TEL. (305) 264-8100 FAX. (305) 262-6978

STORE\W03-54YKK

YES 45F-S ALUM FLUSH GLAZE STOREFRONT SYS. (N.I.)

YKK AP AMERICA INC.
332 FIRETOWER ROAD
DUBLIN, GEORGIA 31021
TEL.(478) 277-1955 FAX(478) 277-1978

revisions:

no	date	by	description
A	9.18.03		NO CHANGE THIS SHEET
B	12.02.06		UPDATED FOR 2004 FBC
C	06.25.08		GENERAL REVISION
D	09.15.08		NO CHANGE THIS SHEET

date: 07-18-03
scale: 1/2"=1'-0"
dr. by: HAMID
chk. by:

drawing no.
W03-54

ANCHOR LOAD CAPACITY – PSF
EXT.(+) & INT.(–)

NOMINAL DIMS.		3/8" SHIM SPACE			1/4" SHIM SPACE			3/8" SHIM SPACE			1/4" SHIM SPACE		
		ANCHOR TYPE			ANCHOR TYPE			ANCHOR TYPE			ANCHOR TYPE		
WIDTH (W)	FRAME HEIGHT	A2	B2	C2	A2	B2	C2	A3	B3	C3	A3	B3	C3
24"	72"	120.0	120.0	120.0	120.0	120.0	120.0	120.0	120.0	120.0	120.0	120.0	120.0
30"		120.0	120.0	120.0	120.0	120.0	120.0	120.0	120.0	120.0	120.0	120.0	120.0
36"		120.0	120.0	113.3	120.0	120.0	120.0	120.0	120.0	120.0	120.0	120.0	120.0
42"		111.2	113.5	97.1	111.2	120.0	120.0	120.0	120.0	120.0	120.0	120.0	120.0
48"		97.3	99.3	85.0	97.3	120.0	120.0	120.0	120.0	120.0	120.0	120.0	120.0
54"		86.5	88.3	75.6	86.5	120.0	117.0	120.0	120.0	113.3	120.0	120.0	120.0
60"		77.9	79.5	68.0	77.9	118.7	105.3	116.8	119.2	102.0	116.8	120.0	120.0
66"		70.8	72.2	61.8	70.8	107.9	95.8	106.2	108.4	92.7	106.2	120.0	120.0
72"		64.9	66.2	56.7	64.9	98.9	87.8	97.3	99.3	85.0	97.3	120.0	120.0
78"		59.9	61.1	52.3	59.9	91.3	81.0	89.8	91.7	78.5	89.8	120.0	120.0
24"	78"	120.0	120.0	120.0	120.0	120.0	120.0	120.0	120.0	120.0	120.0	120.0	120.0
30"		120.0	120.0	120.0	120.0	120.0	120.0	120.0	120.0	120.0	120.0	120.0	120.0
36"		119.8	120.0	104.6	119.8	120.0	120.0	120.0	120.0	120.0	120.0	120.0	120.0
42"		102.7	104.8	89.7	102.7	120.0	120.0	120.0	120.0	120.0	120.0	120.0	120.0
48"		89.8	91.7	78.5	89.8	120.0	120.0	120.0	120.0	117.7	120.0	120.0	120.0
54"		79.9	81.5	69.7	79.9	120.0	108.0	119.8	120.0	104.6	119.8	120.0	120.0
60"		71.9	73.4	62.8	71.9	109.5	97.2	107.8	110.0	94.2	107.8	120.0	120.0
66"		65.3	66.7	57.1	65.3	99.6	88.4	98.0	100.0	85.6	98.0	120.0	120.0
72"		59.9	61.1	52.3	59.9	91.3	81.0	89.8	91.7	78.5	89.8	120.0	120.0
24"	84"	120.0	120.0	120.0	120.0	120.0	120.0	120.0	120.0	120.0	120.0	120.0	120.0
30"		120.0	120.0	116.6	120.0	120.0	120.0	120.0	120.0	120.0	120.0	120.0	120.0
36"		111.2	113.5	97.1	111.2	120.0	120.0	120.0	120.0	120.0	120.0	120.0	120.0
42"		95.3	97.3	83.3	95.3	120.0	120.0	120.0	120.0	120.0	120.0	120.0	120.0
48"		83.4	85.1	72.9	83.4	120.0	112.9	120.0	120.0	109.3	120.0	120.0	120.0
54"		74.2	75.7	64.8	74.2	113.0	100.3	111.2	113.5	97.1	111.2	120.0	120.0
60"		66.7	68.1	58.3	66.7	101.7	90.3	100.1	102.2	87.4	100.1	120.0	120.0
66"		60.7	61.9	53.0	60.7	92.5	82.1	91.0	92.9	79.5	91.0	120.0	120.0
24"	90"	120.0	120.0	120.0	120.0	120.0	120.0	120.0	120.0	120.0	120.0	120.0	120.0
30"		120.0	120.0	108.8	120.0	120.0	120.0	120.0	120.0	120.0	120.0	120.0	120.0
36"		103.8	106.0	90.7	103.8	120.0	120.0	120.0	120.0	120.0	120.0	120.0	120.0
42"		89.0	90.8	77.7	89.0	120.0	120.0	120.0	120.0	116.6	120.0	120.0	120.0
48"		77.9	79.5	68.0	77.9	118.7	105.3	116.8	119.2	102.0	116.8	120.0	120.0
54"		69.2	70.6	60.4	69.2	105.5	93.6	103.8	106.0	90.7	103.8	120.0	120.0
60"		62.3	63.6	54.4	62.3	94.9	84.3	93.4	95.4	81.6	93.4	120.0	120.0
24"	96"	120.0	120.0	120.0	120.0	120.0	120.0	120.0	120.0	120.0	120.0	120.0	120.0
30"		116.8	119.2	102.0	116.8	120.0	120.0	120.0	120.0	120.0	120.0	120.0	120.0
36"		97.3	99.3	85.0	97.3	120.0	120.0	120.0	120.0	120.0	120.0	120.0	120.0
42"		83.4	85.1	72.9	83.4	120.0	112.9	120.0	120.0	109.3	120.0	120.0	120.0
48"		73.0	74.5	63.8	73.0	111.3	98.8	109.5	111.8	95.6	109.5	120.0	120.0
54"		64.9	66.2	56.7	64.9	98.9	87.8	97.3	99.3	85.0	97.3	120.0	120.0
60"		58.4	59.6	51.0	58.4	89.0	79.0	87.6	89.4	76.5	87.6	120.0	118.5
24"	102"	120.0	120.0	120.0	120.0	120.0	120.0	120.0	120.0	120.0	120.0	120.0	120.0
30"		109.9	112.2	96.0	109.9	120.0	120.0	120.0	120.0	120.0	120.0	120.0	120.0
36"		91.6	93.5	80.0	91.6	120.0	120.0	120.0	120.0	120.0	120.0	120.0	120.0
42"		78.5	80.1	68.6	78.5	119.7	106.2	117.8	120.0	102.9	117.8	120.0	120.0
48"		68.7	70.1	60.0	68.7	104.7	92.9	103.1	105.2	90.0	103.1	120.0	120.0
54"		61.1	62.3	53.3	61.1	93.1	82.6	91.6	93.5	80.0	91.6	120.0	120.0
24"	108"	120.0	120.0	113.3	120.0	120.0	120.0	120.0	120.0	120.0	120.0	120.0	120.0
30"		103.8	106.0	90.7	103.8	120.0	120.0	120.0	120.0	120.0	120.0	120.0	120.0
36"		86.5	88.3	75.6	86.5	120.0	117.0	120.0	120.0	113.3	120.0	120.0	120.0
42"		74.2	75.7	64.8	74.2	113.0	100.3	111.2	113.5	97.1	111.2	120.0	120.0
48"		64.9	66.2	56.7	64.9	98.9	87.8	97.3	99.3	85.0	97.3	120.0	120.0
54"		57.7	58.9	50.4	57.7	87.9	78.0	86.5	88.3	75.6	86.5	120.0	117.0

ANCHOR LOAD CAPACITY – PSF
EXT.(+) & INT.(–)

NOMINAL DIMS.		3/8" SHIM SPACE			1/4" SHIM SPACE			3/8" SHIM SPACE			1/4" SHIM SPACE		
		ANCHOR TYPE			ANCHOR TYPE			ANCHOR TYPE			ANCHOR TYPE		
WIDTH (W)	FRAME HEIGHT	A2	B2	C2	A2	B2	C2	A3	B3	C3	A3	B3	C3
24"	114"	120.0	120.0	107.4	120.0	120.0	120.0	120.0	120.0	120.0	120.0	120.0	120.0
30"		98.4	100.4	85.9	98.4	120.0	120.0	120.0	120.0	120.0	120.0	120.0	120.0
36"		82.0	83.6	71.6	82.0	120.0	110.9	120.0	120.0	107.4	120.0	120.0	120.0
42"		70.3	71.7	61.4	70.3	107.1	95.0	105.4	107.5	92.0	105.4	120.0	120.0
48"		61.5	62.7	53.7	61.5	93.7	83.2	92.2	94.1	80.5	92.2	120.0	120.0
24"	120"	116.8	119.2	102.0	116.8	120.0	120.0	120.0	120.0	120.0	120.0	120.0	120.0
30"		93.4	95.4	81.6	93.4	120.0	120.0	120.0	120.0	120.0	120.0	120.0	120.0
36"		77.9	79.5	68.0	77.9	118.7	105.3	116.8	119.2	102.0	116.8	120.0	120.0
42"		66.7	68.1	58.3	66.7	101.7	90.3	100.1	102.2	87.4	100.1	120.0	120.0
48"		58.4	59.6	51.0	58.4	89.0	79.0	87.6	89.4	76.5	87.6	120.0	118.5
24"	126"	111.2	113.5	97.1	111.2	120.0	120.0	120.0	120.0	120.0	120.0	120.0	120.0
30"		89.0	90.8	77.7	89.0	120.0	120.0	120.0	120.0	116.6	120.0	120.0	120.0
36"		74.2	75.7	64.8	74.2	113.0	100.3	111.2	113.5	97.1	111.2	120.0	120.0
42"		63.6	64.9	55.5	63.6	96.9	86.0	95.3	97.3	83.3	95.3	120.0	120.0
24"	132"	106.2	108.4	92.7	106.2	120.0	120.0	120.0	120.0	120.0	120.0	120.0	120.0
30"		84.9	86.7	74.2	84.9	120.0	114.9	120.0	120.0	111.3	120.0	120.0	120.0
36"		70.8	72.2	61.8	70.8	107.9	95.8	106.2	108.4	92.7	106.2	120.0	120.0
42"		60.7	61.9	53.0	60.7	92.5	82.1	91.0	92.9	79.5	91.0	120.0	120.0
24"	138"	101.6	103.7	88.7	101.6	120.0	120.0	120.0	120.0	120.0	120.0	120.0	120.0
30"		81.3	82.9	71.0	81.3	120.0	109.9	120.0	120.0	106.4	120.0	120.0	120.0
36"		67.7	69.1	59.1	67.7	103.2	91.6	101.6	103.7	88.7	101.6	120.0	120.0
42"		58.0	59.2	50.7	58.0	88.4	78.5	87.1	88.8	76.0	87.1	120.0	117.8
24"	144"	97.3	99.3	85.0	97.3	120.0	120.0	120.0	120.0	120.0	120.0	120.0	120.0
30"		77.9	79.5	68.0	77.9	118.7	105.3	116.8	119.2	102.0	116.8	120.0	120.0
36"		64.9	66.2	56.7	64.9	98.9	87.8	97.3	99.3	85.0	97.3	120.0	120.0

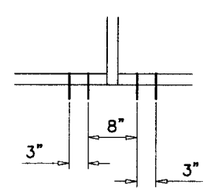

A2, B2, C2

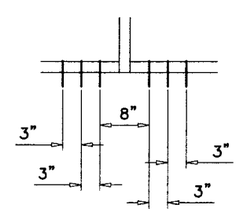

A3, B3, C3

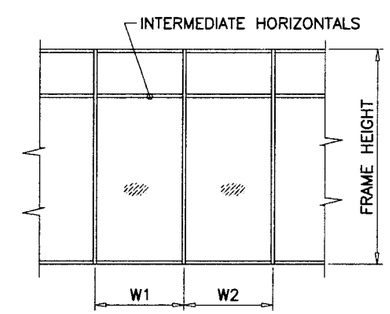

$$\text{WIDTH (W)} = \frac{W1 + W2}{2}$$

ANCHOR LOAD CHARTS FOR MULLS WITH INTERMEDIATE HORIZONTALS

ANCHORS TYPES: SEE SHEET 11 FOR DESCRIPTION

A2 = (2) ANCHORS TYPE 'A' AT EACH SIDE OF MULLION
B2 = (2) ANCHORS TYPE 'B' AT EACH SIDE OF MULLION
C2 = (2) ANCHORS TYPE 'C' AT EACH SIDE OF MULLION

A3 = (3) ANCHORS TYPE 'A' AT EACH SIDE OF MULLION
B3 = (3) ANCHORS TYPE 'B' AT EACH SIDE OF MULLION
C3 = (3) ANCHORS TYPE 'C' AT EACH SIDE OF MULLION

ALL OTHER ANCHORS TO BE SPACED AS PER ELEVATION.

Engr: DR. HUMAYOUN FAROOQ
STRUCTURES
FLA. PE # 16557
C.A.N. 3538

SEP 17 2008

PRODUCT REVISED
to comply with the Florida Building Code
Acceptance No. 08-0715.14
Application Date AUG. 7, 2013
By: Manuel Perez
Miami-Dade Product Control Division

AL-FAROOQ CORPORATION
ENGINEERS & PRODUCT DEVELOPMENT
1235 S.W. 87 AVE
MIAMI, FLORIDA 33174
TEL. (305) 264-8100 FAX. (305) 262-6978
STORE\W03-54YKK

YES 45F-S ALUM FLUSH GLAZE STOREFRONT SYS. (N.I.)

YKK AP AMERICA INC.
332 FIRETOWER ROAD
DUBLIN, GEORGIA 31021
TEL(478) 277-1955 FAX(478) 277-1978

revisions:

no	date	by	description
A	9.18.03		NO CHANGE THIS SHEET
B	12.02.06		UPDATED FOR 2004 FBC
C	06.25.08		GENERAL REVISION
D	09.15.08		NO CHANGE THIS SHEET

date: 07-18-03
scale: 1/2"=1'-0"
dr. by: HAMID
chk. by:

drawing no. W03-54

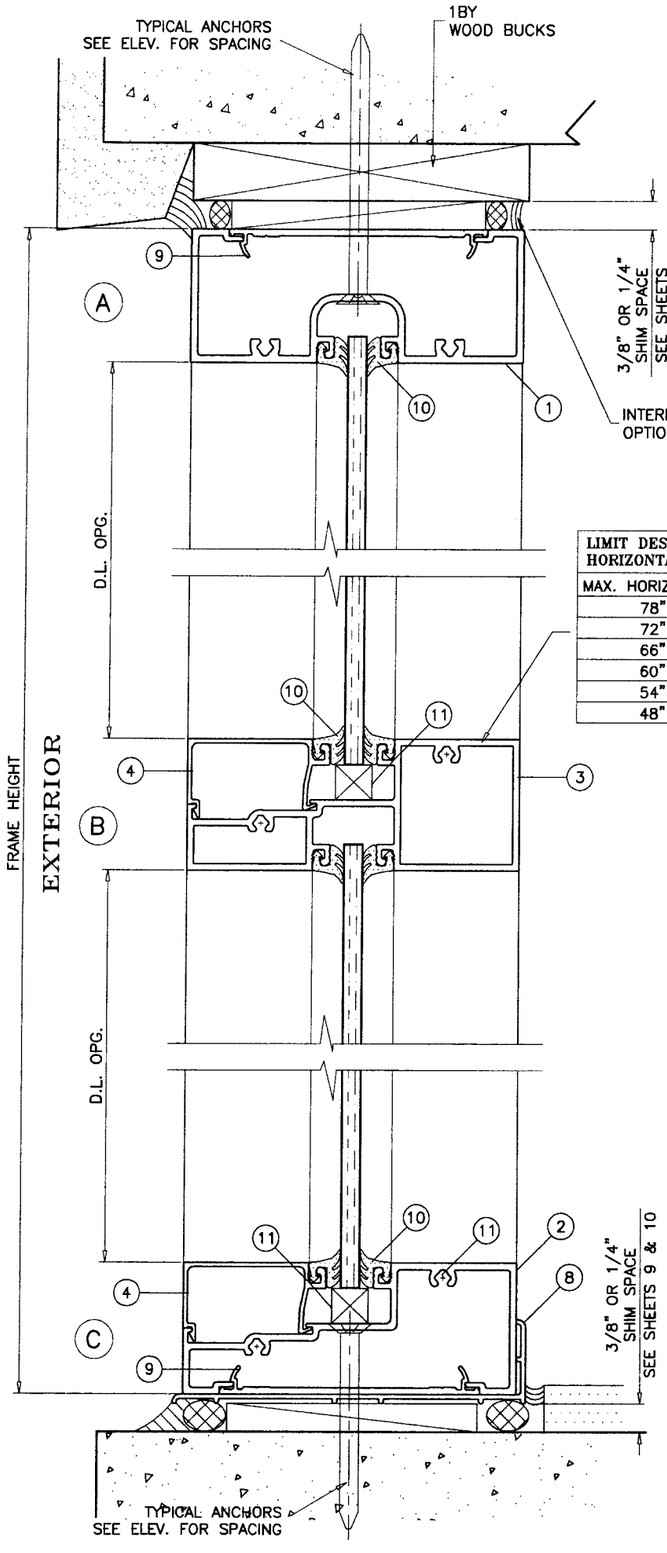

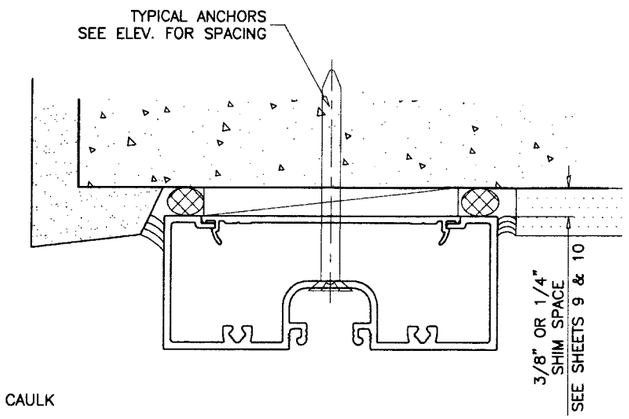

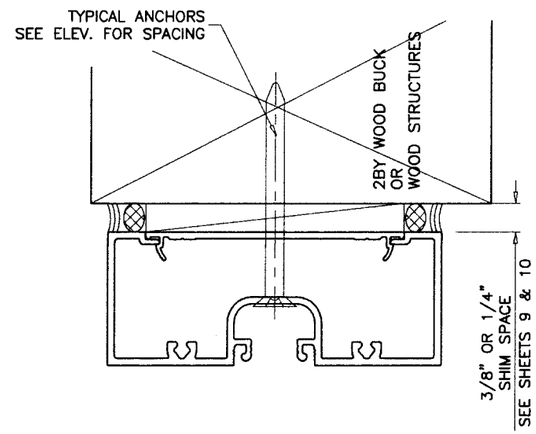

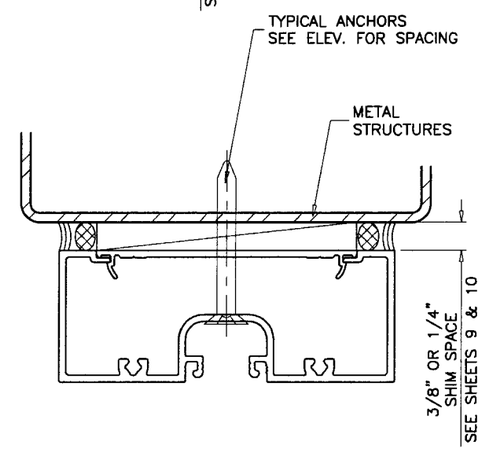

LIMIT DESIGN LOADS FOR HORIZONTAL AS FOLLOWS	
MAX. HORIZ. SPAN	MAX. DESIGN LOADS
78"	72 PSF
72"	76 PSF
66"	80 PSF
60"	88 PSF
54"	104 PSF
48"	120 PSF

TYPICAL ANCHORS: SEE ELEV. FOR SPACING

TYPE 'A'– 1/4" DIA. ULTRACON BY 'ELCO' (Fu=177 KSI, Fy=155 KSI)
INTO 2BY WOOD BUCKS OR WOOD STRUCTURES
1–1/2" MIN. PENETRATION INTO WOOD

THRU 1BY BUCKS INTO CONC. OR MASONRY
1–1/4" MIN. EMBED INTO CONC. OR MASONRY

TYPE 'B'– 1/4" DIA. ULTRACON BY 'ELCO' (Fu=177 KSI, Fy=155 KSI)
DIRECTLY INTO CONC. OR MASONRY
1–3/4" MIN. EMBED INTO CONC. OR MASONRY

TYPE 'C'– 1/4" DIA. TEKS/KWIK–FLEX SELF DRILLING SCREWS (GRADE 2 CRS)
INTO METAL STRUCTURES
STEEL : 12 GA. MIN. (Fy = 36 KSI MIN.)
ALUMINUM : 1/8" THK. MIN. (6063–T5 MIN.)
(STEEL IN CONTACT WITH ALUMINUM TO BE PLATED OR PAINTED)

TYPICAL EDGE DISTANCE

INTO CONCRETE AND MASONRY = 2–1/2" MIN.
INTO WOOD STRUCTURE = 1" MIN.
INTO METAL STRUCTURE = 3/4" MIN.

CONCRETE f'c = 3000 PSI MIN.
MASONRY f'm = 1500 PSI MIN.

SEALANTS:

ALL FRAME CORNERS SEALED WITH JOINT SEALANT.

WOOD BUCKS AND METAL STRUCTURES NOT BY YKK AP MUST SUPPORT LOADS IMPOSED BY GLAZING SYSTEM AND TRANSFER THEM TO THE BUILDING STRUCTURE.

Engr: DR. HUMAYOUN FAROOQ
STRUCTURES
FLA. PE # 16557
C.A.N. 3538

SEP 17 2008

PRODUCT REVISED
as complying with the Florida
Building Code
Acceptance No. 08-0715.14
Expiration Date AUG. 1, 2013
By Manuel Perez
Miami-Dade Product Control
Division

AL-FAROOQ CORPORATION
ENGINEERS & PRODUCT DEVELOPMENT
1235 S.W. 87 AVE
MIAMI, FLORIDA 33174
TEL. (305) 264-8100 FAX. (305) 262-6978
STORE\W03-54YKK

YES 45F-S ALUM FLUSH GLAZE STOREFRONT SYS. (N.I.)

YKK AP AMERICA INC.
332 FIRETOWER ROAD
DUBLIN, GEORGIA 31021
TEL.(478) 277-1955 FAX(478) 277-1978

revisions:

no	date	by	description
A	9.18.03		NO CHANGE THIS SHEET
B	12.02.06		UPDATED FOR 2004 FBC
C	06.25.08		GENERAL REVISION
D	09.15.08		NO CHANGE THIS SHEET

date: 07–18–03
scale: 1/2" = 1"
dr. by: HAMID
chk. by:

drawing no.
W03–54

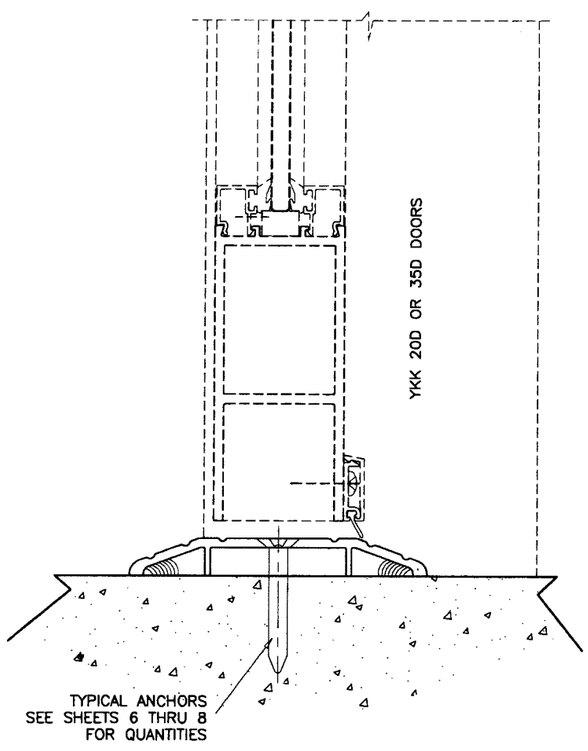

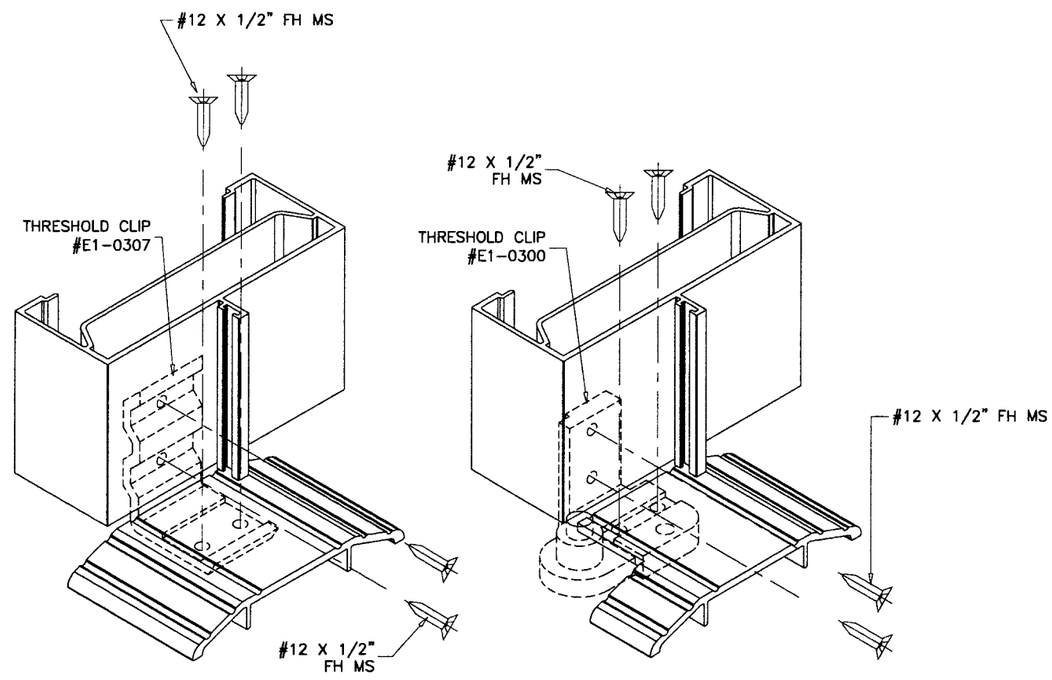

MULLION CONNECTION TO DOOR SILL

SEE SEPARATE YKK DOOR NOA'S FOR COMPONENT SIZES, INSTALLATION DETAILS AND DESIGN LOAD RATINGS. LOWER DESIGN PRESSURE FROM STOREFRONT OR DOOR NOA WILL APPLY TO ENTIRE SYSTEM.

Engr: DR. HUMAYOUN FAROOQ
STRUCTURES
FLA. PE # 16557
C.A.N. 3538

SEP 17 2008

PRODUCT REVISED
in compliance with the Florida
Building Code
Application No. 08-0715.14
Effective Date AUG. 7, 2013
By Manuel Perez
Miami-Dade Product Control
Division

AL-FAROOQ CORPORATION
ENGINEERS & PRODUCT DEVELOPMENT
1235 S.W. 87 AVE
MIAMI, FLORIDA 33174
TEL. (305) 264-8100 FAX. (305) 262-6978

STORE\W03-54YKK

YES 45F-S ALUM FLUSH GLAZE STOREFRONT SYS. (N.I.)

YKK AP AMERICA INC.
332 FIRETOWER ROAD
DUBLIN, GEORGIA 31021
TEL(478) 277-1955 FAX(478) 277-1978

revisions:

no	date	by	description
C	06.25.08		GENERAL REVISION
D	09.15.08		REV. PER BCCO COMMENTS

date: 07-18-03
scale: 1/2" = 1"
dr. by: HAMID
chk. by:

drawing no.
W03-54

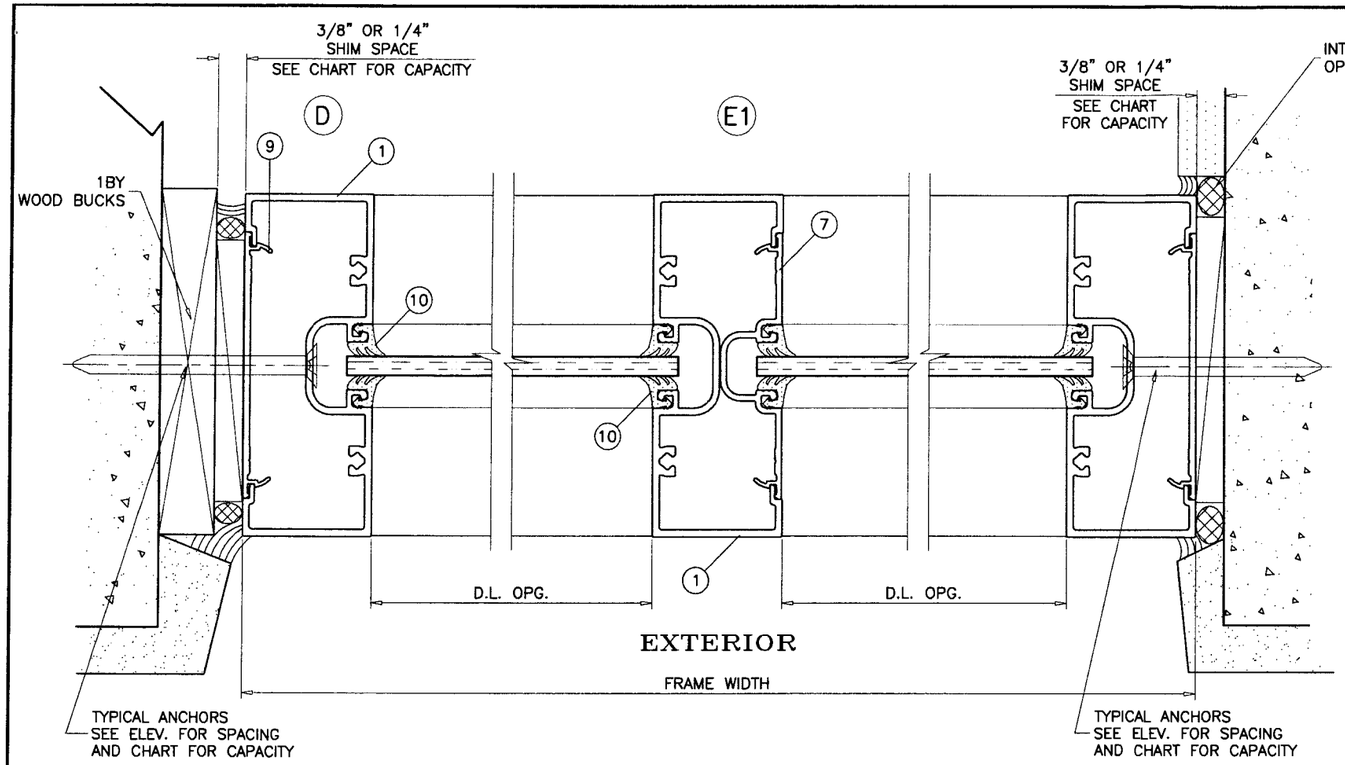

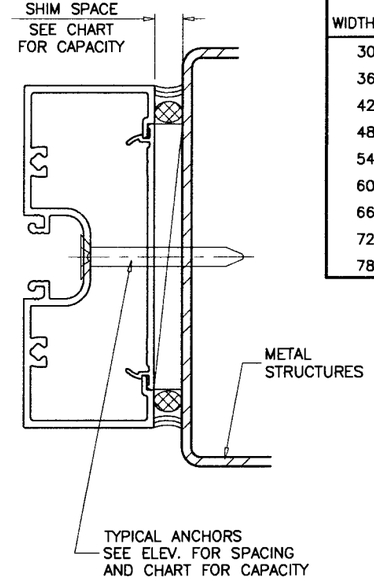

JAMB ANCHOR LOAD CAPACITY – PSF EXT.(+) & INT.(–)						
	3/8" SHIM SPACE			1/4" SHIM SPACE		
	ANCHOR TYPE			ANCHOR TYPE		
WIDTH (W)	A	B	C	A	B	C
30"	120.0	120.0	120.0	120.0	120.0	120.0
36"	120.0	120.0	120.0	120.0	120.0	120.0
42"	120.0	120.0	120.0	120.0	120.0	120.0
48"	120.0	120.0	120.0	120.0	120.0	120.0
54"	120.0	120.0	113.0	120.0	120.0	120.0
60"	117.0	119.0	102.0	117.0	120.0	120.0
66"	106.0	108.0	93.0	106.0	120.0	120.0
72"	97.0	99.0	85.0	97.0	120.0	120.0
78"	90.0	92.0	78.0	90.0	114.0	120.0

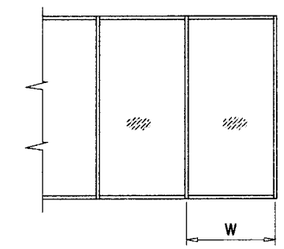

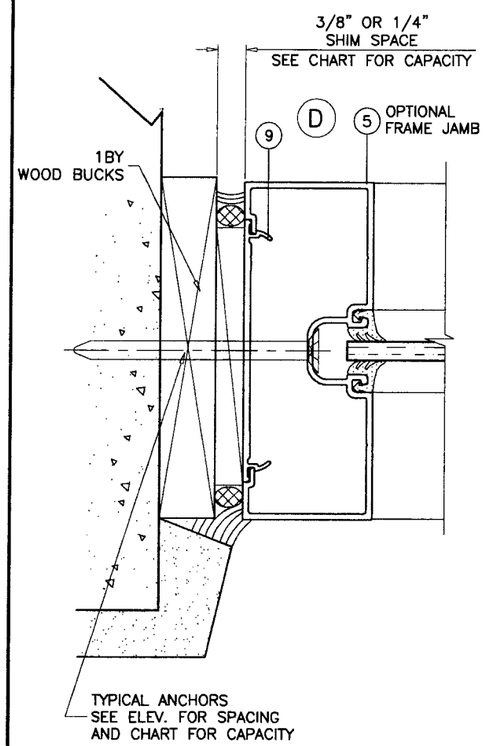

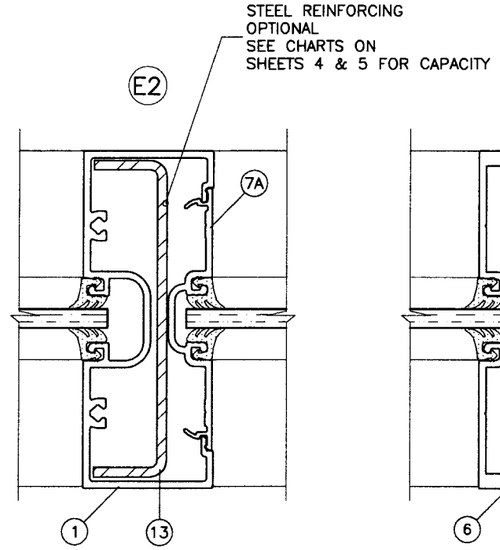

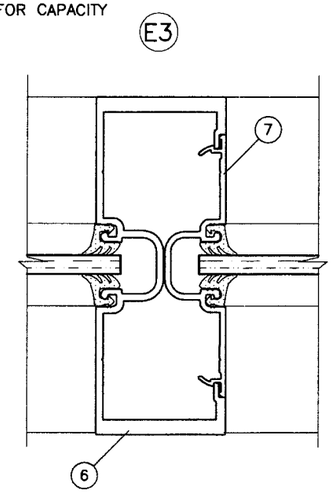

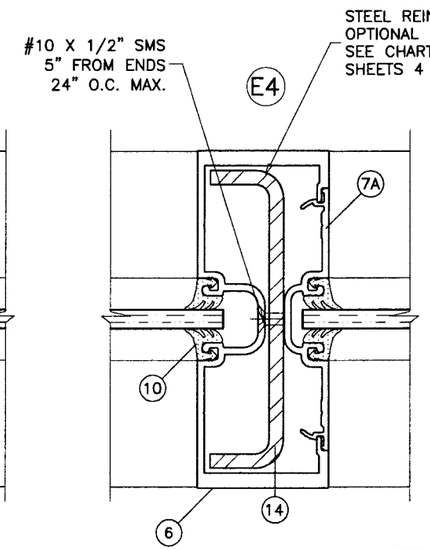

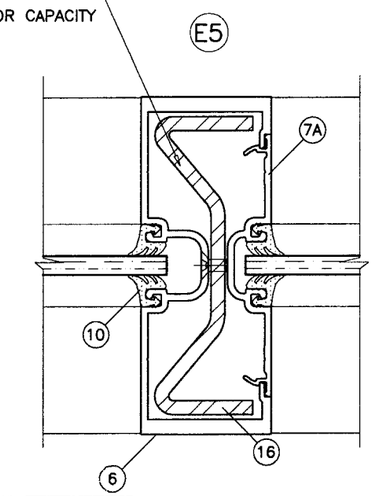

Engr: DR. HUMAYCUN FAROOQ
STRUCTURES
FLA. PE # 16557
C.A.N. 3538

SEP 17 2008

PRODUCT REVISED
to comply with the Florida
Building Code
Application No. 08-0715.14
Expiration Date: Aug. 7, 2013
By: Manuel Perez
Miami-Dade Product Control
Division

AL-FAROOQ CORPORATION
ENGINEERS & PRODUCT DEVELOPMENT
1235 S.W. 87 AVE
MIAMI, FLORIDA 33174
TEL. (305) 264-8100 FAX. (305) 262-6978

STORE\W03-54YKK

YES 45F-S ALUM FLUSH GLAZE STOREFRONT SYS. (N.I.)

YKK AP AMERICA INC.
332 FIRETOWER ROAD
DUBLIN, GEORGIA 31021
TEL.(478) 277-1955 FAX(478) 277-1978

revisions:

no	date	by	description
A	9.18.03		REV. PER BCCO COMMENTS
B	12.02.06		UPDATED FOR 2004 FBC
C	06.25.08		GENERAL REVISION
D	09.15.08		NO CHANGE THIS SHEET

date: 07-18-03
scale: 1/2" = 1"
dr. by: HAMID
chk. by:

drawing no.
W03-54

F1 (17) NO REINFORCING
SEE SHEETS 6 THRU 8
FOR CAPACITY

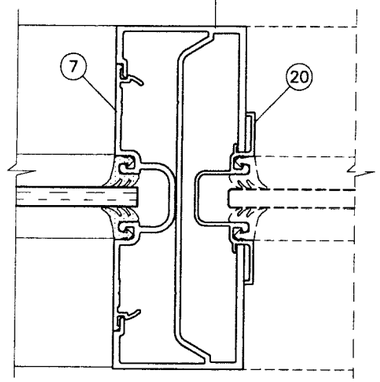

F2 (18) LIGHT REINFORCING
SEE SHEETS 6 THRU 8
FOR CAPACITY

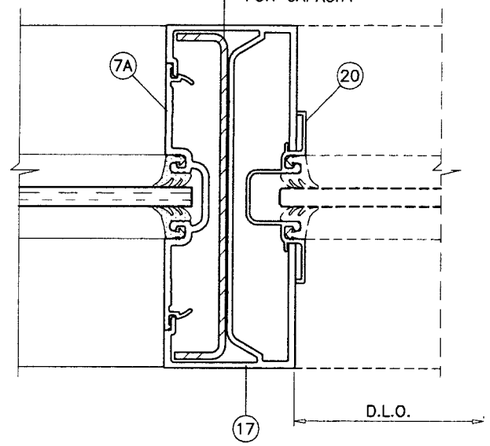

F3 (19) HEAVY REINFORCING
SEE SHEETS 6 THRU 8
FOR CAPACITY

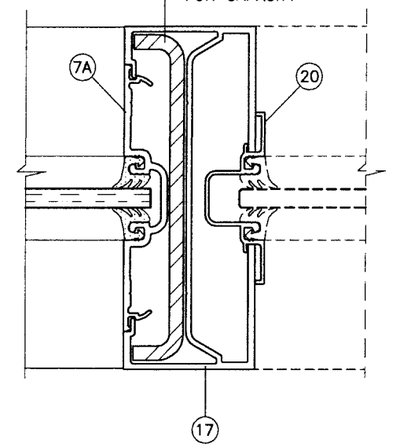

G1 (17) NO REINFORCING
SEE SHEETS 6 THRU 8
FOR CAPACITY

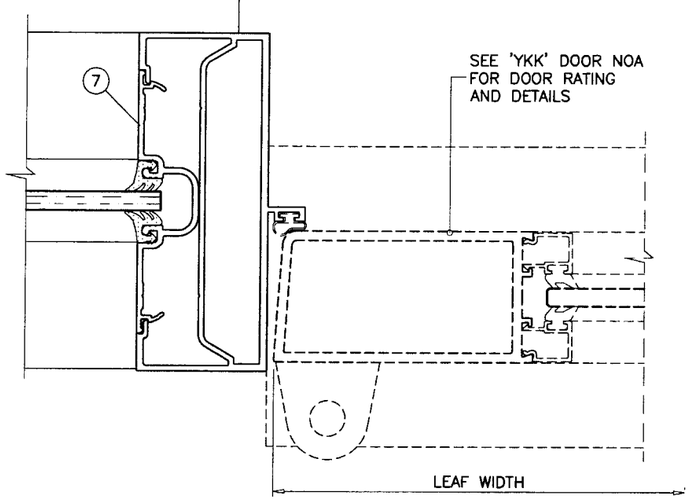

G2 (18) LIGHT REINFORCING
SEE SHEETS 6 THRU 8
FOR CAPACITY

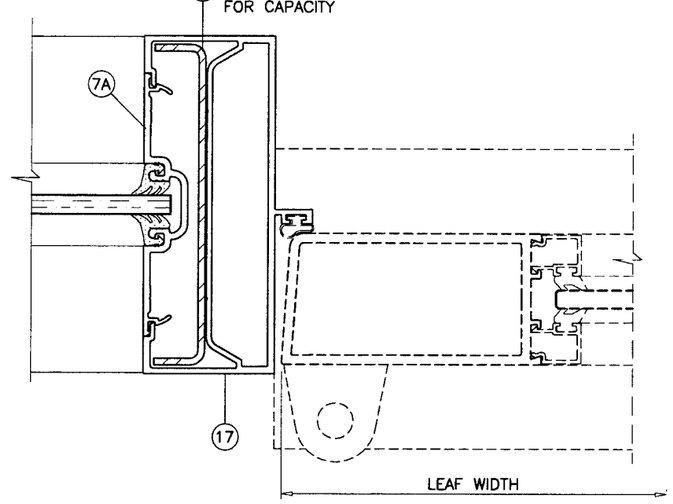

G3 (19) HEAVY REINFORCING
SEE SHEETS 6 THRU 8
FOR CAPACITY

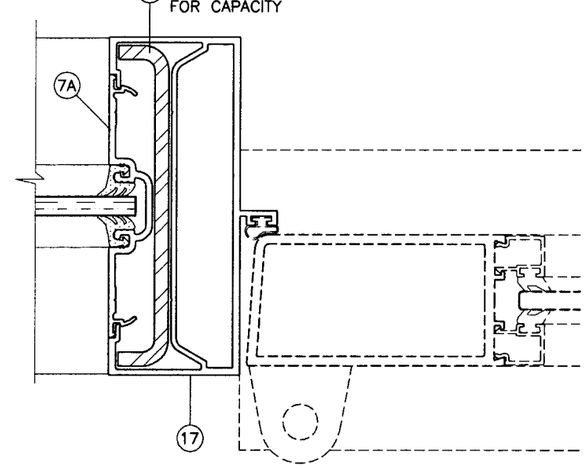

Engr: DR. HUMAYOUN FAROOQ
STRUCTURES
FLA. PE # 16557
C.A.N. 3538

SEP 17 2008

PRODUCT REVISED
as complying with the Florida
Building Code
Application No. 08-0715.14
Expiration Date AUG. 7, 2013
By Manuel Perez
Manager, Product Control Section

AL-FAROOQ CORPORATION
ENGINEERS & PRODUCT DEVELOPMENT
1235 S.W. 87 AVE
MIAMI, FLORIDA 33174
TEL. (305) 264-8100 FAX. (305) 262-6978
STORE\W03-54YKK

YES 45F-S ALUM FLUSH GLAZE STOREFRONT SYS. (N.I.)

YKK ap®
YKK AP AMERICA INC.
332 FIRETOWER ROAD
DUBLIN, GEORGIA 31021
TEL.(478) 277-1955 FAX(478) 277-1978

revisions:

no	date	by	description
A	9.18.03		REV. PER BCCO COMMENTS
B	12.02.06		UPDATED FOR 2004 FBC
C	06.25.08		GENERAL REVISION
D	09.15.08		NO CHANGE THIS SHEET

date: 07-18-03
scale: 1/2" = 1"
dr. by: HAMID
chk. by:

drawing no.
W03-54

sheet 13 of 15

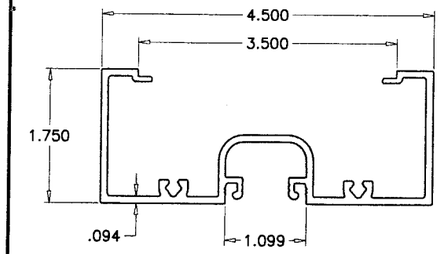

1 FRAME HEAD/JAMB/MULLION

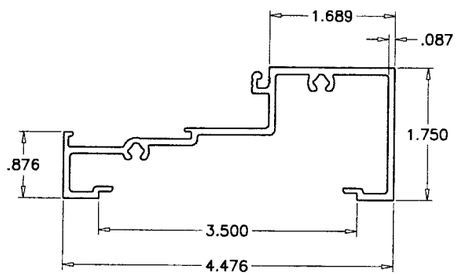

2 FRAME SILL

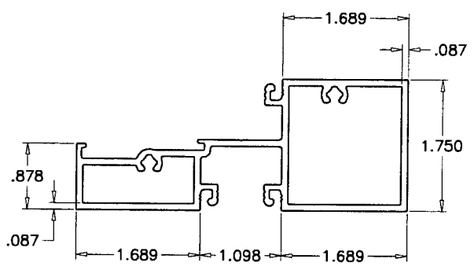

3 FRAME HORIZONTAL

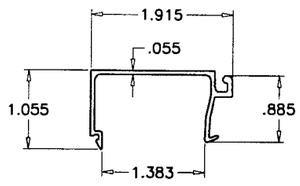

4 GLAZING STOP

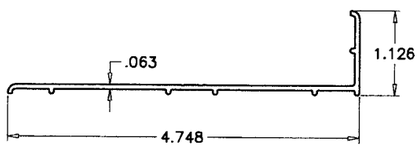

8 SILL FLASHING (OPTIONAL)

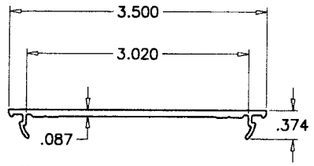

9 SNAP IN COVER

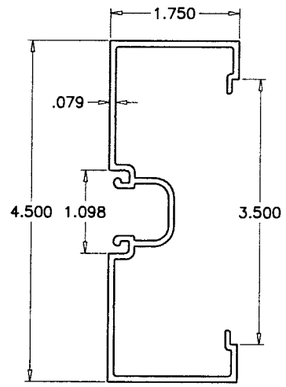

5 FRAME JAMB

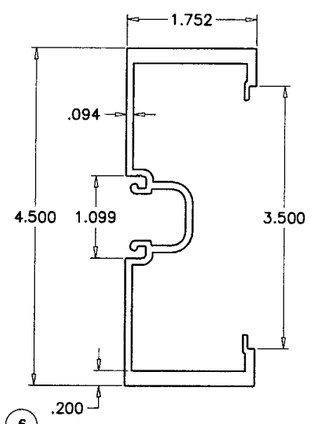

6 MULLION

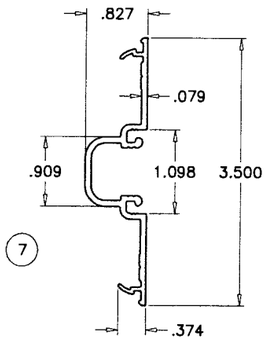

7

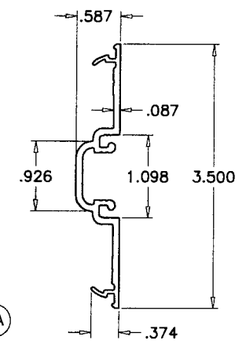

7A POCKET FILLERS

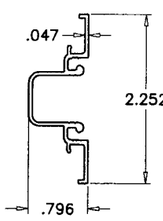

20 TRANSOM GLAZING POCKET

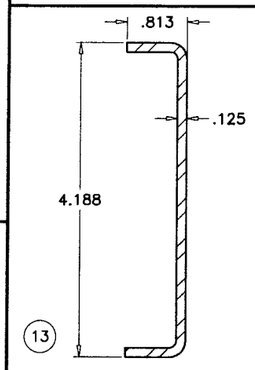

13 FOR MULLION E9-1003

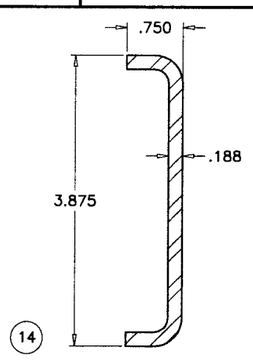

14 FOR MULLION E9-1059

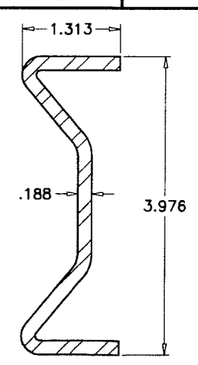

15 FOR MULLION E9-1059

STEEL REINFORCING
36 KSI MIN.

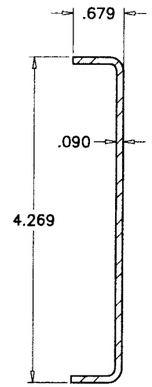

18

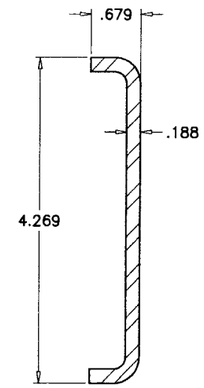

19 DOOR MULLION REINFORCING CHANNELS

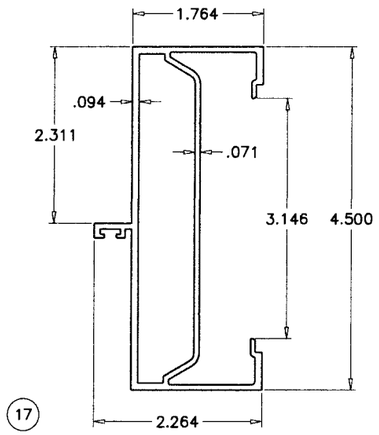

17 DOOR JAMB

Engr: DR. HUMAYOUN FAROOQ
STRUCTURES
FLA. PE # 16557
C.A.N. 3538

SEP 17 2008

PRODUCT REVISED
as complying with the Florida
Building Code
Acceptance No. 08-0715.14
Expiration Date AUG. 7, 2013
By Manuel Perez
Miami-Dade Product Control
Division

AL-FAROOQ CORPORATION
ENGINEERS & PRODUCT DEVELOPMENT
1235 S.W. 87 AVE
MIAMI, FLORIDA 33174
TEL. (305) 264-8100 FAX. (305) 262-6978
STORE\W03-54YKK

YES 45F-S ALUM FLUSH GLAZE STOREFRONT SYS. (N.I.)

YKK ap®
YKK AP AMERICA INC.
332 FIRETOWER ROAD
DUBLIN, GEORGIA 31021
TEL.(478) 277-1955 FAX(478) 277-1978

revisions:

no	date	by	description
A	9.18.03		NO CHANGE THIS SHEET
B	12.02.06		UPDATED FOR 2004 FBC
C	06.25.08		GENERAL REVISION
D	09.15.08		NO CHANGE THIS SHEET

date: 07-18-03
scale: 1/2" = 1"
dr. by: HAMID
chk. by:

drawing no.
W03-54

sheet 14 of 15

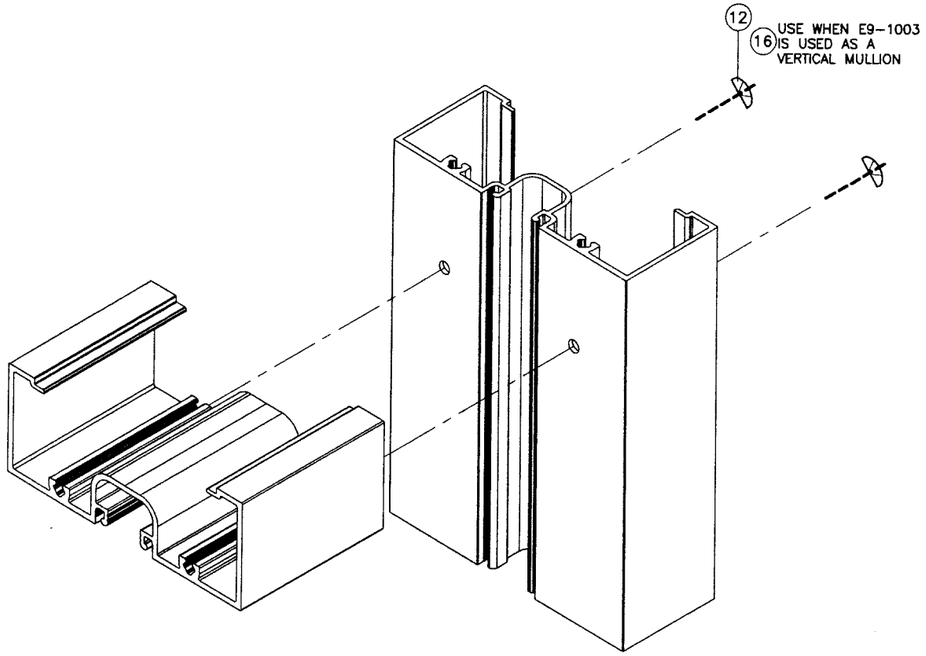

ITEM NO.	PART NUMBER	QUANTITY	DESCRIPTION	MATERIAL	MANF./SUPPLIER/REMARKS
1	E9-1003	AS REQD.	FRAME HEAD/JAMB/MULLION	6063-T5	–
2	E9-1004	AS REQD.	FRAME SILL	6063-T5	–
3	E9-1006	AS REQD.	FRAME HORIZONTAL	6063-T5	–
4	E9-1005	AS REQD.	GLAZING STOP	6063-T5	–
5	E9-1001	AS REQD.	OPTIONAL JAMB	6063-T5	–
6	E9-1059	AS REQD.	MULLION	6063-T5	–
7	E9-1009	AS REQD.	POCKET FILLER	6063-T5	–
7A	E9-1002	AS REQD.	POCKET FILLER	6063-T5	–
8	E9-1030	AS REQD.	SILL FLASHING	6063-T5	–
9	E1-1054	AS REQD.	SNAP IN COVER, 2-1/2" LONG	6063-T5	–
10	E2-0052	AS REQD.	GLAZING GASKET	EPDM	–
11	E2-0019	AS REQD.	SETTING BLOCK	EPDM	–
12	PC-1216	2/ CORNER	ASSEMBLY SCREWS	CRS	#12 X 1" PPH SMS
13	E1-0181	AS REQD.	REINFORCING CHANNEL	STEEL	.813 X 4.188 X .813 X .125" THK.
14	E1-0184	AS REQD.	REINFORCING CHANNEL	STEEL	.750 X 3.875 X .750 X .188" THK.
15	–	AS REQD.	REINFORCING CHANNEL	STEEL	1.313 X 3.976 X 1.313 X .188" THK.
16	PC-1220	2/ CORNER	ASSEMBLY SCREWS (FOR SCREW SPLINE)	CRS	#12 X 1-1/4" PPH SMS
17	E9-0421	2/ DOOR	DOOR FRAME JAMB	6063-T5	YKK AP AMERICA
18	E1-0194	AS REQD.	REINFORCING CHANNEL (Fy = 38 KSI)	STEEL	.679 X 4.269 X .679 X .090"
19	–	AS REQD.	REINFORCING CHANNEL (Fy = 50 KSI)	STEEL	.679 X 4.269 X .679 X .188"
20	E9-0434	AS REQD.	TRANSOM GLAZING POCKET	6063-T5	YKK AP AMERICA

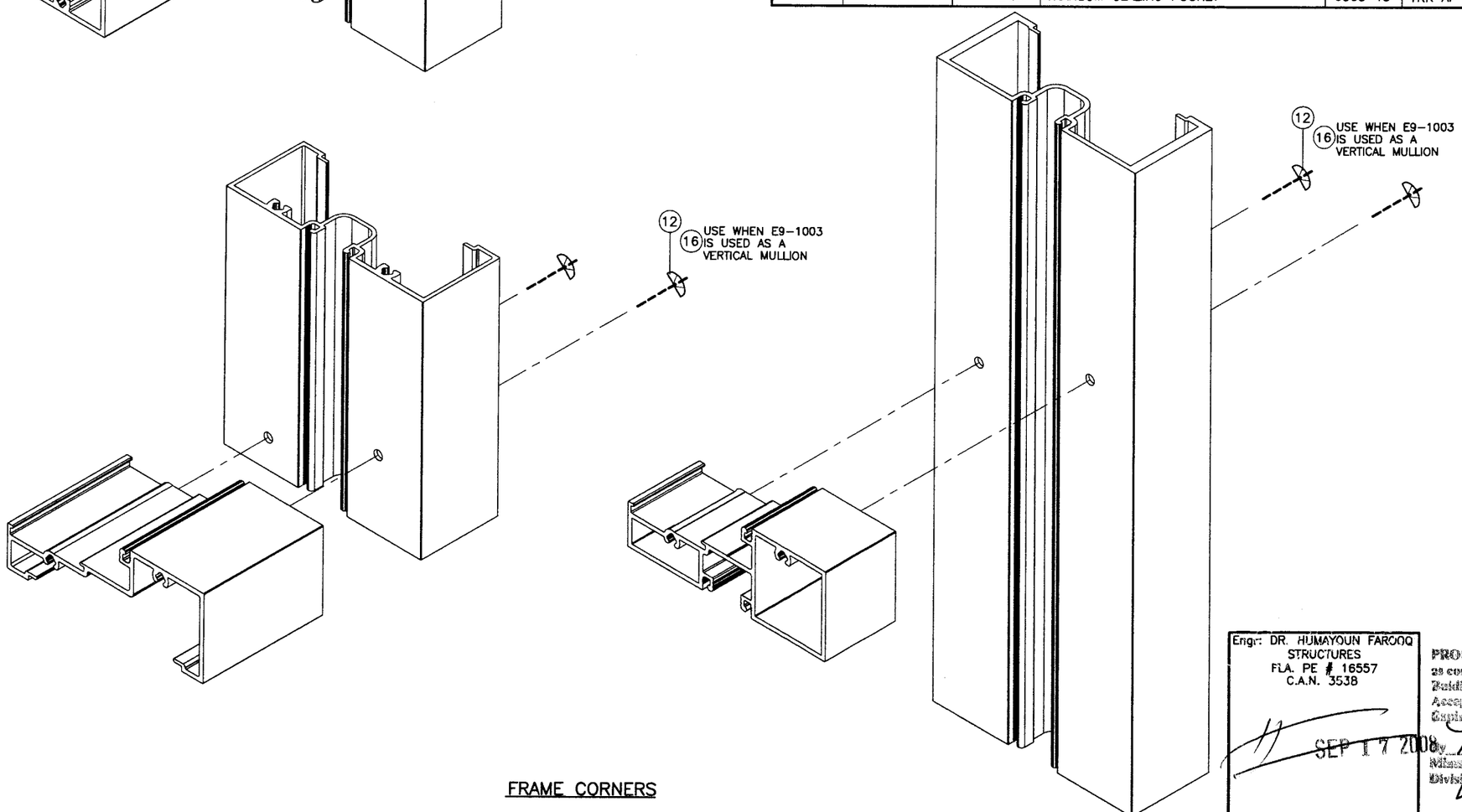

FRAME CORNERS

Engr: DR. HUMAYOUN FAROOQ
STRUCTURES
FLA. PE # 16557
C.A.N. 3538

SEP 17 2008

PRODUCT REVISED
as complying with the Florida
Building Code
Acceptance No. 08-0715.14
Expiration Date AUG. 7, 2013
By Manuel Perez
Miami-Dade Product Control
Division

AL-FAROOQ CORPORATION
ENGINEERS & PRODUCT DEVELOPMENT
1235 S.W. 87 AVE
MIAMI, FLORIDA 33174
TEL. (305) 264-8100 FAX. (305) 262-6978

STORE\W03-54YKK

YES 45F-S ALUM FLUSH GLAZE STOREFRONT SYS. (N.I.)

YKK AP AMERICA INC.
332 FIRETOWER ROAD
DUBLIN, GEORGIA 31021
TEL.(478) 277-1955 FAX(478) 277-1978

revisions:			
no	date	by	description
A	9.18.03		NO CHANGE THIS SHEET
B	12.02.06		UPDATED FOR 2004 FBC
C	06.25.08		GENERAL REVISION
D	09.15.08		NO CHANGE THIS SHEET

date: 07-18-03
scale: 1/2" = 1"
dr. by: HAMID
chk. by:

drawing no.
W03-54