MIAMI-DADE COUNTY
BUILDING CODE COMPLIANCE OFFICE (BCCO)
PRODUCT CONTROL DIVISION

MIAMI-DADE COUNTY, FLORIDA
METRO-DADE FLAGLER BUILDING
140 WEST FLAGLER STREET, SUITE 1603
MIAMI, FLORIDA 33130-1563
(305) 375-2901 FAX (305) 372-6339
www.miamidade.gov/buildingcode

# NOTICE OF ACCEPTANCE (NOA)

**Teeem USA, LLC**
**418 North Segrave Street**
**Daytona Beach, FL 32114**

**SCOPE:**

This NOA is being issued under the applicable rules and regulations governing the use of construction materials. The documentation submitted has been reviewed by Miami-Dade County Product Control Division and accepted by the Board of Rules and Appeals (BORA) to be used in Miami Dade County and other areas where allowed by the Authority Having Jurisdiction (AHJ).

This NOA shall not be valid after the expiration date stated below. The Miami-Dade County Product Control Division (In Miami Dade County) and/or the AHJ (in areas other than Miami Dade County) reserve the right to have this product or material tested for quality assurance purposes. If this product or material fails to perform in the accepted manner, the manufacturer will incur the expense of such testing and the AHJ may immediately revoke, modify, or suspend the use of such product or material within their jurisdiction. BORA reserves the right to revoke this acceptance, if it is determined by Miami-Dade County Product Control Division that this product or material fails to meet the requirements of the applicable building code. This product is approved as described herein, and has been designed to comply with the Florida Building Code, including the High Velocity Hurricane Zone.

**DESCRIPTION: Series "Corona 70 CTMD Vinyl Tilt & Turn" Inswing White PVC Casement Window – L.M.I.**

**APPROVAL DOCUMENT:** Drawing No. **TEEM0007**, titled "Corona 70 CTMD Vinyl Tilt and Turn Casement Window – LMI", sheets 1 through 5 of 5, dated 07/09/08 with revision "**A**" dated 11/18/08, prepared by PTC, LLC, signed and sealed by Paul E. Winter, P.E., bearing the Miami-Dade County Product Control Approval stamp with the Notice of Acceptance number and Approval date by the Miami-Dade County Product Control Division.

**MISSILE IMPACT RATING: Large and Small Missile Impact Resistant**

**LABELING:** Each unit shall bear a permanent label with the manufacturer's name Okno Holding, Q. S., Praha in the Czechoslovakia and following statement: "Miami-Dade County Product Control Approved", unless otherwise noted herein.

**RENEWAL** of this NOA shall be considered after a renewal application has been filed and there has been no change in the applicable building code negatively affecting the performance of this product.

**TERMINATION** of this NOA will occur after the expiration date or if there has been a revision or change in the materials, use, and/or manufacture of the product or process. Misuse of this NOA as an endorsement of any product, for sales, advertising or any other purposes shall automatically terminate this NOA. Failure to comply with any section of this NOA shall be cause for termination and removal of NOA.

**ADVERTISEMENT:** The NOA number preceded by the words Miami-Dade County, Florida, and followed by the expiration date may be displayed in advertising literature. If any portion of the NOA is displayed, then it shall be done in its entirety.

**INSPECTION:** A copy of this entire NOA shall be provided to the user by the manufacturer or its distributors and shall be available for inspection at the job site at the request of the Building Official.

This NOA consists of this page 1 and evidence page E-1, as well as approval document mentioned above.

The submitted documentation was reviewed by **Manuel Perez, P.E.**

MIAMI-DADE COUNTY APPROVED

**Teeem USA, LLC**

## NOTICE OF ACCEPTANCE: EVIDENCE SUBMITTED

**A. DRAWINGS**

1. Manufacturer's die drawings and sections.
2. Drawing No **TEEM0007**, titled "Corona 70 CTMD Vinyl Tilt and Turn Casement Window – LMI", sheets 1 through 5 of 5, dated 07/09/08 with revision "A" dated 11/18/08, prepared by PTC, LLC, signed and sealed by Paul E. Winter, P.E.

**B. TESTS**

1. Test reports on: 1) Air Infiltration Test, per FBC, TAS 202-94
   2) Uniform Static Air Pressure Test, Loading per FBC TAS 202-94
   3) Water Resistance Test, per FBC, TAS 202-94
   4) Large Missile Impact Test per FBC, TAS 201-94
   5) Cyclic Wind Pressure Loading per FBC, TAS 203-94
   6) Forced Entry Test, per FBC 2411 3.2.1, TAS 202-94

   along with marked-up drawings and installation diagram of a vinyl casement window, prepared by Certified Testing Laboratories, Test Report No. **CTLA 1662W-3**, dated 07/12/07, signed and sealed by Ramesh C. Patel, P. E.

**C. CALCULATIONS**

1. Anchor verification calculations and structural analysis, complying with FBC-2007, prepared by PTC, LLC, dated 06/23/08, signed and sealed by Douglas J. McDougall, P.E. **Complies with ASTM E1300-04**

**D. QUALITY ASSURANCE**

1. Miami Dade Building Code Compliance Office (BCCO).

**E. MATERIAL CERTIFICATIONS**

1. Notice of Acceptance No. **07-1116.04** issued to E.I. DuPont DeNemours & Co., Inc. for their "**DuPont Sentry Glass ® Plus**" dated 01/03/08, expiring on 01/14/12.
2. Notice of Acceptance No. **06-0103.01** issued to regal Plastics Co., for their "White Rigid PVC Exterior Extrusions for Windows and Doors" dated 05/25/06, expiring on 05/25/11.

**F. STATEMENTS**

1. Statement letter of conformance and no financial interest, dated December 08, 2008, signed and sealed by Paul E. Winter, P.E.
2. Statement letter of Successor Professional Engineer pursuant to FBPE Chapter 61G15-27, dated December 1, 2008, signed and sealed by Paul E. Winter, P.E.
3. Laboratory compliance letter for Test Report No. **CTLA 1662W-3**, issued by Certified Testing Laboratories, dated July 12, 2007, signed and sealed by Ramesh C. Patel, P.E.

**G. OTHERS**

1. None

**Manuel Perez, P.E.**
**Product Control Examiner**
**NOA No. 08-0717.02**
**Expiration Date: March 11, 2014**
**Approval Date: March 11, 2009**

# TEEEM USA, LLC

# CORONA 70 CTMD SERIES VINYL TILT & TURN WINDOW-LMI

## INSTALLATION ANCHORAGE DETAILS

GENERAL NOTES:

1. THE PRODUCT SHOWN HEREIN IS DESIGNED TO COMPLY WITH THE 2004 & 2007 FLORIDA BUILDING CODE, INCLUDING HIGH VELOCITY HURRICANE ZONE (HVHZ), AND AT THE DESIGN PRESSURES STATED HEREIN. A

2. THE PRODUCT DETAILS CONTAINED HEREIN ARE BASED UPON SIGNED AND SEALED TEST REPORT #CTLA 1662W-3 DATED 03/23/07, AND ASSOCIATED LABORATORY STAMPED DRAWINGS. THE PRODUCT HAS BEEN EVALUATED FOR CONFORMANCE TO THE STANDARDS LISTED IN THE 2007 FLORIDA BUILDING CODE (FBC) AND IS IN COMPLIANCE WITH SAID STANDARDS, INCLUDING HIGH VELOCITY HURRICANE ZONE (HVHZ) REQUIREMENTS.

3. ADEQUACY OF THE EXISTING STRUCTURAL CONCRETE/MASONRY AND 2X FRAMING AS A MAIN WIND FORCE RESISTING SYSTEM CAPABLE OF WITHSTANDING AND TRANSFERRING APPLIED PRODUCT LOADS TO THE FOUNDATION IS THE RESPONSIBILITY OF THE ENGINEER OR ARCHITECT OF RECORD FOR THE PROJECT.

4. 1X AND 2X BUCKS (WHEN USED) SHALL BE DESIGNED AND ANCHORED TO PROPERLY TRANSFER ALL LOADS TO THE STRUCTURE. BUCK DESIGN AND INSTALLATION IS THE RESPONSIBILITY OF THE ENGINEER OR ARCHITECT OF RECORD FOR THE PROJECT.

5. THE INSTALLATION DETAILS DESCRIBED HEREIN ARE GENERIC AND MAY NOT REFLECT ACTUAL CONDITIONS FOR A SITE SPECIFIC SITE. IF SITE CONDITIONS CAUSE INSTALLATION TO DEVIATE FROM THE REQUIREMENTS DETAILED HEREIN, THEN THE BUILDING OFFICIAL MAY ELECT ONE OF THE FOLLOWING OPTIONS:
   A. OUTSIDE HVHZ: REQUIRE THAT A LICENSED ENGINEER OR ARCHITECT PREPARE AND SUBMIT SITE SPECIFIC DOCUMENTS FOR USE WITH THIS DOCUMENT.
   B. INSIDE HVHZ: REQUIRE THAT A ONE-TIME SITE SPECIFIC APPROVAL BE APPLIED FOR AND OBTAINED FROM THE MIAMI-DADE COUNTY PRODUCT CONTROL DIVISION.

6. AN APPROVED IMPACT PROTECTIVE SYSTEM IS NOT REQUIRED ON THIS PRODUCT IN AREAS REQUIRING IMPACT RESISTANCE.

7. WINDOW FRAME MATERIAL: PVC.

8. GLASS MEETS THE REQUIREMENTS OF ASTM E1300-04 GLASS CHARTS. SEE SHEET 4 FOR GLAZING DETAIL. A

9. DESIGNATION "X" STANDS FOR THE FOLLOWING:
   A. X: OPERABLE PANEL

10. A 1/3 INCREASE IN ALLOWABLE STRESS FOR WIND LOADS WAS NOT USED IN THE DESIGN OF THE PRODUCT(S) SHOWN HEREIN.

INSTALLATION NOTES:

1. TWO (2) INSTALLATION ANCHOR IS REQUIRED AT EACH ANCHOR LOCATION SHOWN.

2. THE NUMBER OF INSTALLATION ANCHORS DEPICTED IS THE MINIMUM NUMBER OF ANCHORS TO BE USED FOR PRODUCT INSTALLATION.

3. SHIM AS REQUIRED AT EACH INSTALLATION ANCHOR WITH LOAD BEARING SHIM(S). MAXIMUM ALLOWABLE SHIM STACK TO BE 1/4 INCH. SHIM WHERE SPACE OF 1/16 INCH OR GREATER OCCURS. SHIM(S) SHALL BE CONSTRUCTED OF HIGH DENSITY PLASTIC OR BETTER.

4. FOR INSTALLATION INTO WOOD FRAMING, USE #14 OR 1/4 INCH WOOD SCREWS OF SUFFICIENT LENGTH TO ACHIEVE 1 1/2 INCH MINIMUM EMBEDMENT. A

5. FOR INSTALLATION THROUGH 1X BUCK TO CONCRETE/MASONRY, OR DIRECTLY INTO CONCRETE/MASONRY, USE 1/4 INCH ITW TAPCONS OF SUFFICIENT LENGTH TO ACHIEVE 1 1/4 INCH MINIMUM EMBEDMENT.

6. MINIMUM EMBEDMENT AND EDGE DISTANCE EXCLUDE WALL FINISHES, INCLUDING BUT NOT LIMITED TO STUCCO, FOAM, BRICK VENEER, AND SIDING.

7. INSTALLATION ANCHORS AND ASSOCIATED HARDWARE MUST BE MADE OF CORROSION RESISTANT MATERIAL OR HAVE A CORROSION RESISTANT COATING.

8. INSTALLATION ANCHORS SHALL BE INSTALLED IN ACCORDANCE WITH ANCHOR MANUFACTURER'S INSTALLATION INSTRUCTIONS, AND ANCHORS SHALL NOT BE USED IN SUBSTRATES WITH STRENGTHS LESS THAN THE MINIMUM STRENGTH SPECIFIED BY THIS DOCUMENT.

9. FOR HOLLOW BLOCK AND GROUT FILLED BLOCK, DO NOT INSTALL INSTALLATION ANCHORS INTO MORTAR JOINTS. EDGE DISTANCE IS MEASURED FROM FREE EDGE OF BLOCK OR EDGE OF MORTAR JOINT INTO FACE SHELL OF BLOCK.

10. INSTALLATION ANCHOR CAPACITIES FOR PRODUCTS HEREIN ARE BASED ON SUBSTRATE MATERIALS WITH THE FOLLOWING PROPERTIES:
    A. WOOD PT SOUTHERN YELLOW PINE - MINIMUM SPECIFIC GRAVITY OF 0.55.
    B. CONCRETE - MINIMUM COMPRESSIVE STRENGTH OF 2700 PSI AND CONFORMS TO ACI 301, ACI 318-05 AND ACI 355. A
    C. MASONRY - STRENGTH CONFORMANCE TO ASTM C-90, GRADE N, TYPE 1 (OR GREATER) AND CONFORMS TO ACI 530-05.

| DESIGN PRESSURE RATING (PSF) | | IMPACT RATING |
|---|---|---|
| WHERE WATER INFILTRATION REQUIREMENT IS NEEDED | WHERE WATER INFILTRATION REQUIREMENT IS NOT NEEDED | LARGE MISSLE IMPACT |
| ±120.0 | ±120.0 | |

A

TABLE OF CONTENTS


| SHEET | REVISION | SHEET DESCRIPTION |
|---|---|---|
| 1 | A | GENERAL AND INSTALLATION NOTES |
| 2 | A | ELEVATION AND ANCHOR LAYOUT |
| 3 | A | VERTICAL SECTIONS |
| 4 | A | HORIZONAL SECTIONS, ANCHOR STRAP & GLAZING DETAILS |
| 5 | A | B.O.M., COMPONENTS, HARDWARE & CORNER DETAILS |


A

APPROVED BY: PAUL E. WINTER
DATE: 11/19/08

| REV | DESCRIPTION | DATE | BY |
|---|---|---|---|
| A | PER MIAMI-DADE MARKUPS 10/06/08 | 11/18/08 | BB |

TEEEM USA, LLC
418 NORTH SEAGRAVE ST. C
DAYTONA BEACH, FLORIDA 32114

TITLE: CORONA 70 CTMD VINYL TILT AND TURN CASEMENT WINDOW-LMI
GENERAL AND INSTALLATION NOTES

DRAWN BY: BB
DATE: 07/09/08
SCALE: N.T.S.
DRAWING NO.: TEEM0007
REV: A
SHEET: 1 OF 5


PREPARED BY:
PTC, LLC
Phone 321.690.1788 Fax 321.690.1789


Project# 307-0307


Paul E. Winter
P.E. No. 22693
12/8/08
PTC, LLC
1535 Cogswell Street, Suite 125
Rockledge, Florida 32955
FBPE Certificate of Authorization NO. 25933


Approved as complying with the Florida Building Code
Date 03/04/2009
NOA# 08-0717.02
Miami Dade Product Control Division
By

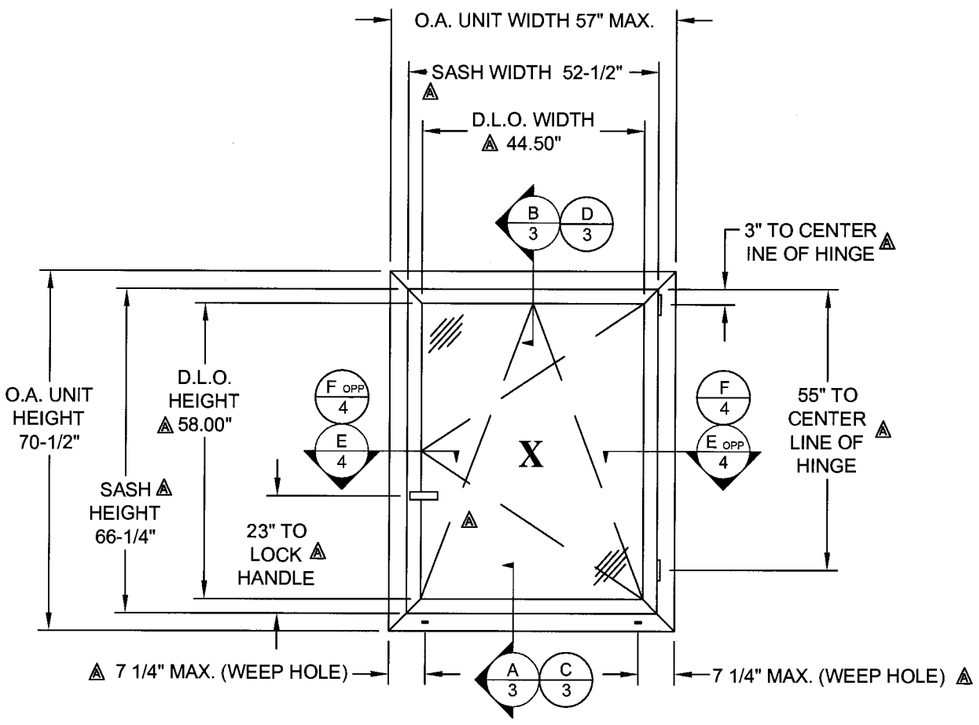


## ELEVATION

**EXTERIOR VIEW**

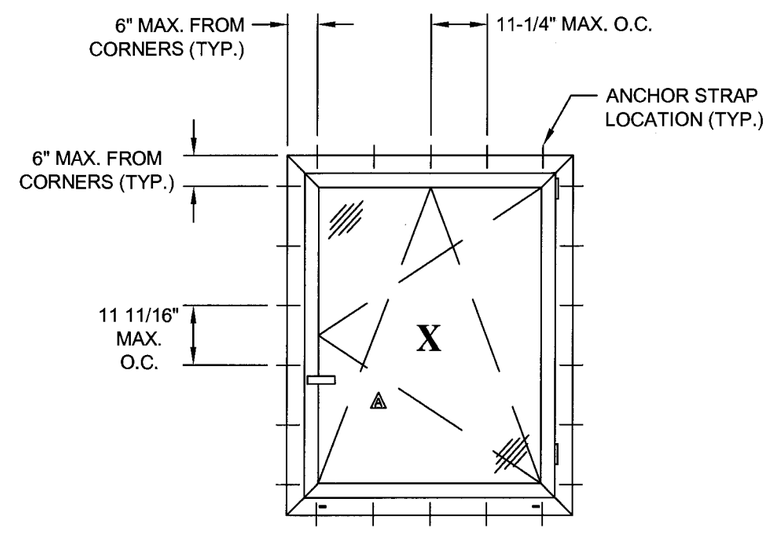


## ANCHOR LAYOUT

**EXTERIOR VIEW**

| REV | DESCRIPTION | DATE | BY |
|---|---|---|---|
| A | PER MIAMI-DADE MARKUPS 10/06/08 | 11/18/08 | BB |

APPROVED BY: PAUL E. WINTER DATE: 11/19/08

**TEEEM USA, LLC**
418 NORTH SEAGRAVE ST. C
DAYTONA BEACH, FLORIDA 32114
TITLE: CORONA 70 CTMD VINYL TILT AND TURN CASEMENT WINDOW-LMI
ELEVATION AND ANCHOR LAYOUT

DRAWN BY: BB
DATE: 07/09/08
SCALE: N.T.S.
DRAWING NO.: TEEM0007
REV: A
SHEET: 2 OF 5

PREPARED BY:
PTC, LLC
Phone 321.690.1788 Fax 321.690.1789
Project# 307-0307
Paul E. Winter
P.E. No. 22693
PTC, LLC
1535 Cogswell Street, Suite C25
Rockledge, Florida 32955
FBPE Certificate of Authorization NO. 25935

Approved as complying with the Florida Building Code
Date 03/04/2009
NOA# 08-0717.02
Miami Dade Product Control Division
By

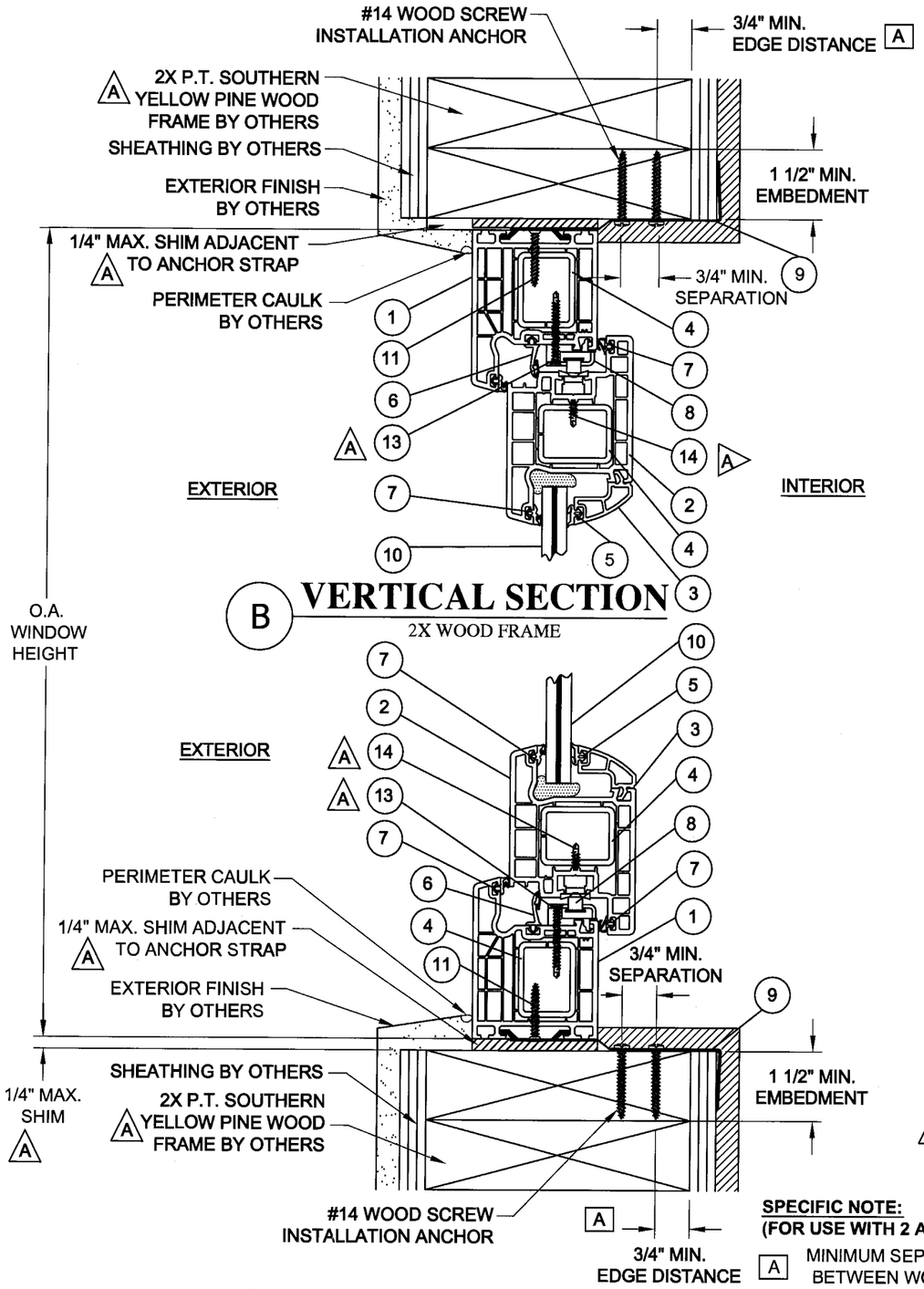


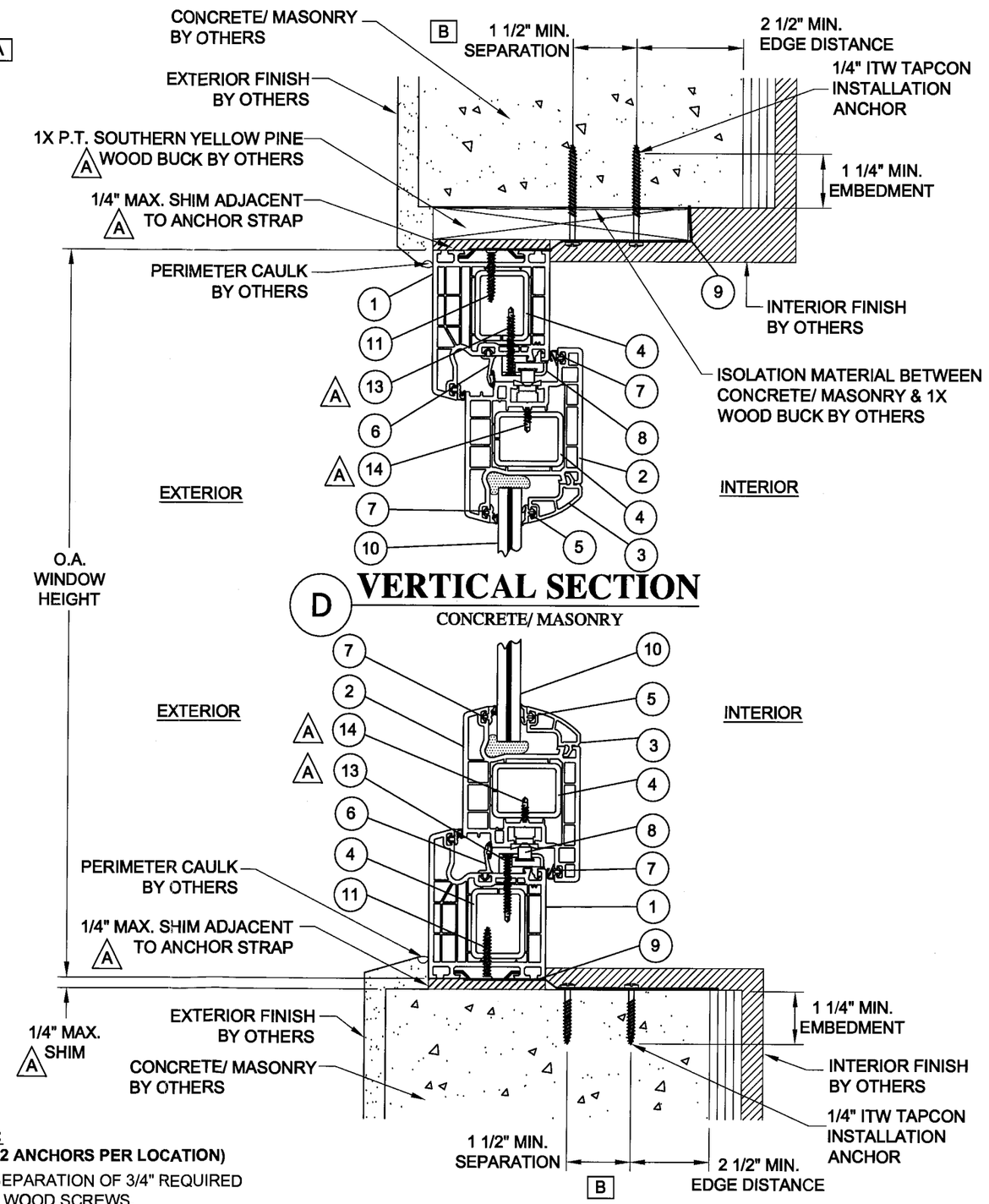


**SPECIFIC NOTE:**
**(FOR USE WITH 2 ANCHORS PER LOCATION)**

A MINIMUM SEPARATION OF 3/4" REQUIRED BETWEEN WOOD SCREWS.

B MINIMUM SEPERATION OF 1 1/2" REQUIRED BETWEEN TAPCONS, IF TWO ANCHORS ARE USED.

| REV | DESCRIPTION | DATE | BY |
|---|---|---|---|
| A | PER MIAMI-DADE MARKUPS 10/06/08 | 11/18/08 | BB |

APPROVED BY: PAUL E. WINTER
DATE: 11/19/08

TEEEM USA, LLC
418 NORTH SEAGRAVE ST. C
DAYTONA BEACH, FLORIDA 32114

TITLE: CORONA 70 CTMD VINYL TILT AND TURN CASEMENT WINDOW-LMI
VERTICAL SECTIONS

DRAWN BY: BB
DATE: 07/09/08
SCALE: N.T.S.
DRAWING NO.: TEEM0007
REV: A
SHEET: 3 OF 5

PREPARED BY:
PTC, LLC
Phone 321.690.1788 Fax 321.690.1789

Project# 307-0307

Paul E. Winter
P.E. No. 22693

PTC, LLC
1535 Cogswell Street, Suite C25
Rockledge, Florida 32955
FBPE Certificate of Authorization NO. 25935

Approved as complying with the Florida Building Code
Date 03/04/2009
NOA# 08-0717.02
Miami Dade Product Control Division
By Manuel Perez

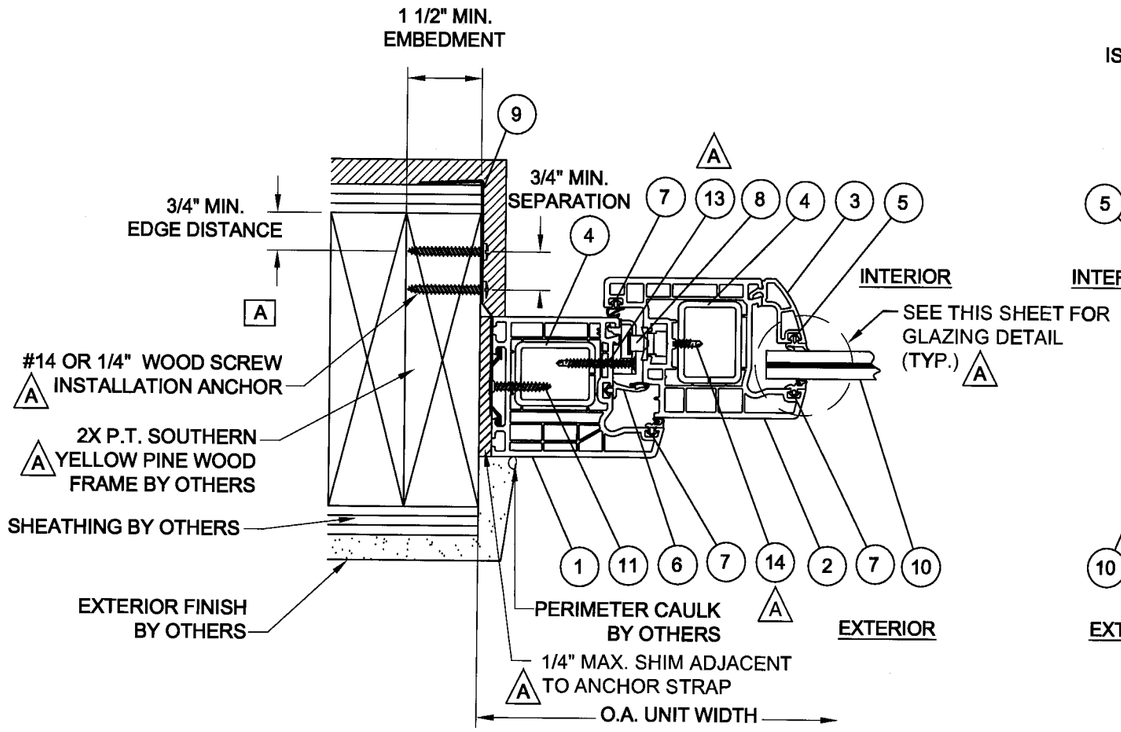


## E HORIZONTAL SECTION

2X WOOD FRAME

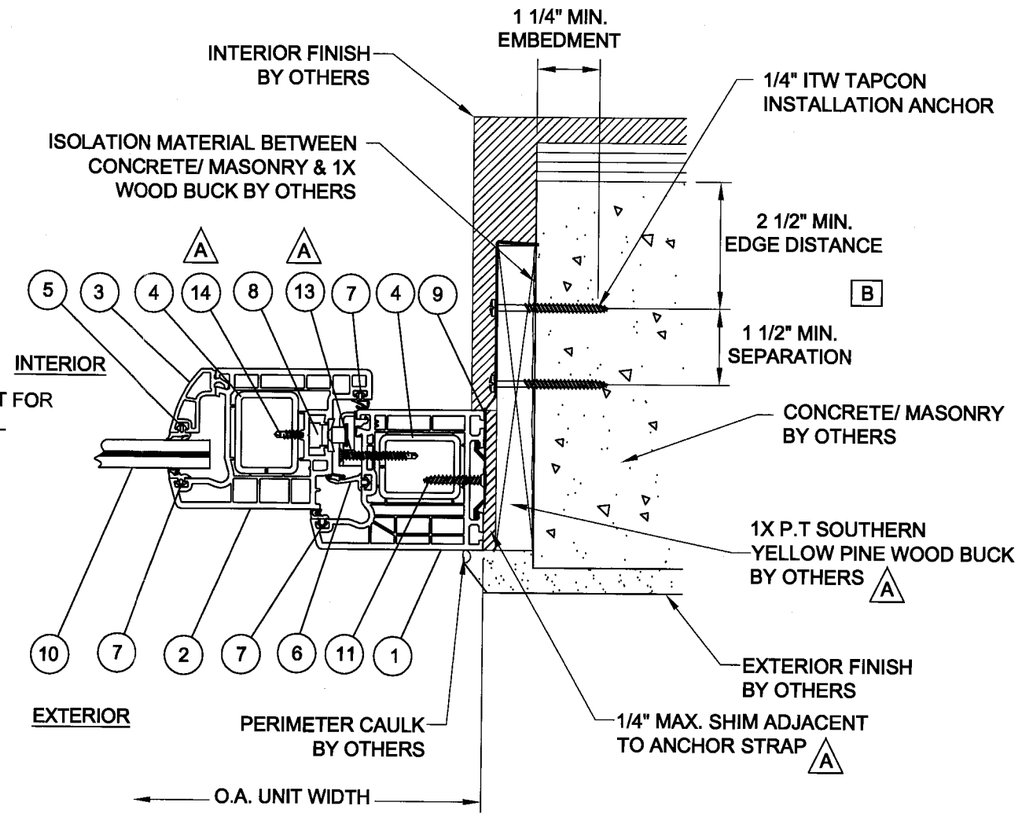


## F HORIZONTAL SECTION

CONCRETE/ MASONRY

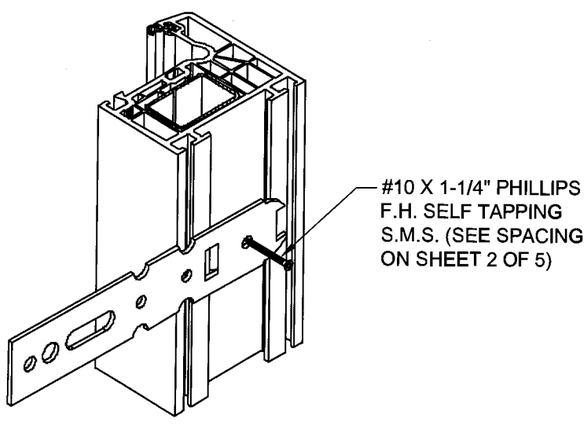


16 GA. ANCHOR STRAP DETAIL

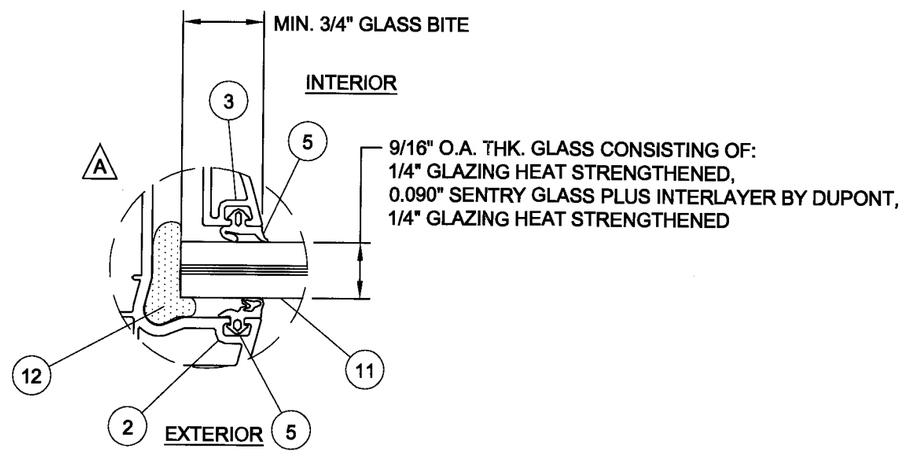


GLAZING DETAIL
LARGE MISSLE IMPACT

**SPECIFIC NOTE:**
**(FOR USE WITH 2 ANCHORS PER LOCATION)**

A — MINIMUM SEPERATION OF 3/4" REQUIRED BETWEEN WOOD SCREWS.

B — MINIMUM SEPERATION OF 1 1/2" REQUIRED BETWEEN TAPCONS, IF TWO ANCHORS ARE USED.

| REV | DESCRIPTION | DATE | BY |
|---|---|---|---|
| A | PER MIAMI-DADE MARKUPS 10/06/08 | 11/18/08 | BB |

APPROVED BY: PAUL E. WINTER
DATE: 11/19/08

TEEEM USA, LLC
418 NORTH SEAGRAVE ST. C
DAYTONA BEACH, FLORIDA 32114

TITLE: CORONA 70 CTMD VINYL TILT AND TURN CASEMENT WINDOW-LMI
HORIZONTAL SECTIONS, ANCHOR STRAP & GLAZING DETAILS

DRAWN BY: BB
DATE: 07/09/08
SCALE: N.T.S.
DRAWING NO.: TEEM0007
REV: A
SHEET: 4 OF 5

PREPARED BY: PTC, LLC
Phone 321.690.7788 Fax 321.690.1789

Project# 307-0307
Paul E. Winter
P.E. No. 22693
PTC, LLC
1535 Cogswell Street, Suite C25
Rockledge, Florida 32955
FBPE Certificate of Authorization NO. 25935

Approved as complying with the Florida Building Code
Date 03/04/2009
NOA# 08-071.02
Miami Dade Product Control Division
By

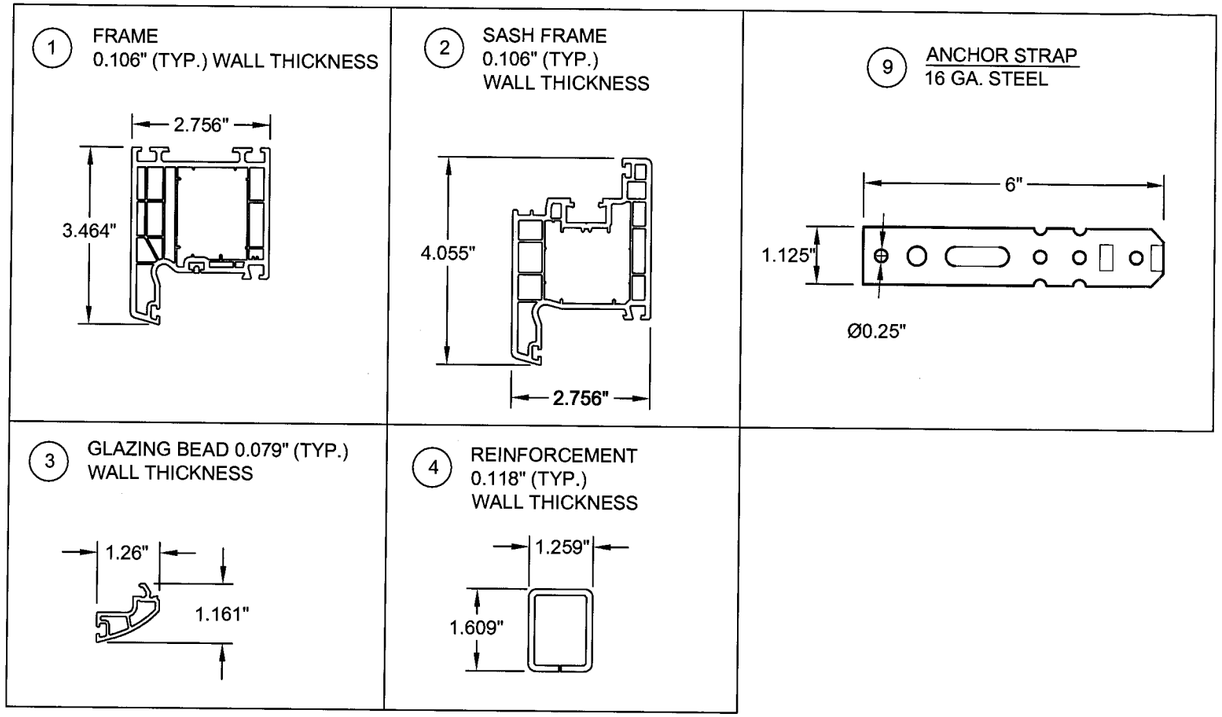


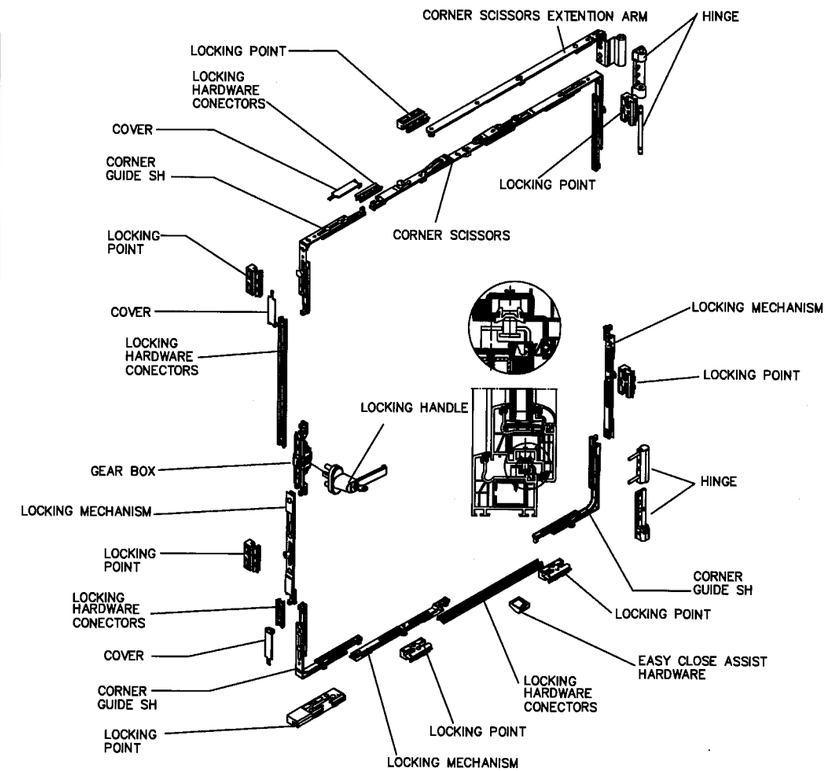


8 MULTIPOINT LOCKING SYSTEM

## BILL OF MATERIALS

| ITEM # | DESCRIPTION | MANUFACTURER | MATERIAL |
|---|---|---|---|
| 1 | FRAME | SCHUCO A | PVC |
| 2 | SASH | A SCHUCO | PVC |
| 3 | GLAZING BEAD | SCHUCO A | PVC |
| 4 | REINFORCEMENT | A SCHUCO | GALVANIZED STEEL |
| 5 | GLAZING VINYL | SCHUCO A | VINYL |
| 6 | FRAME VINYL FLAP | A SCHUCO | VINYL |
| 7 | WEATHERSTRIPPING | SCHUCO A | VINYL |
| 8 | TILT & SLIDE MULTI POINT LOCK | SCHUCO SF3 & GV966 | ----- |
| 9 | ANCHOR STRAP | SCHUCO A | GALVANIZED STEEL DIN 10142 (ASTM A653) |
| 10 | 9/16" O.A. LAMINATED GLASS CONSISTING OF: 1/4" HEAT STRENGTHENED GLASS, 0.090" SENTRY GLASS PLUS LAMINATE INTERLAYER A BY DUPONT, 1/4" HEAT STRENGTHENED GLASS | ----- | ----- |
| 11 | #10 X 1 1/4" PFH SMS | ----- | STEEL |
| 12 | BACK BEDDING A | DOW CORNING 995 | SILICONE |
| 13 | #8 X 1" PHILLIP MACHINE THREAD SELF TAPPING C.S. SMS A | ----- | STEEL |
| 14 | #8 X 0.500" PHILLIPS SELF TAPPING FH C.S. SMS A | ----- | STEEL |

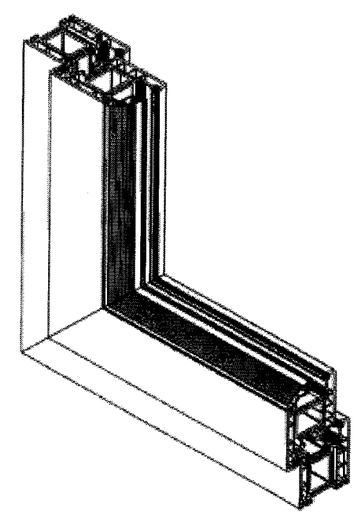

1 2 FRAME AND SASH

APPROVED BY: PAUL E. WINTER
DATE: 11/19/08

| REV | DESCRIPTION | DATE | BY |
|---|---|---|---|
| A | PER MIAMI-DADE MARKUPS 10/06/08 | 11/18/08 | BB |

TEEEM USA, LLC
418 NORTH SEAGRAVE ST. C
DAYTONA BEACH, FLORIDA 32114

TITLE: CORONA 70 CTMD VINYL TILT AND TURN CASEMENT WINDOW-LMI
B.O.M., COMPONENTS, HARDWARE & CORNER DETAILS

PREPARED BY: PTC, LLC
Phone 321.690.1788 Fax 321.690.1789

DRAWN BY: BB
DATE: 07/09/08
SCALE: N.T.S.
DRAWING NO.: TEEM0007
REV: A
SHEET: 5 OF 5

Project# 307-0307
Paul E. Winter
P.E. No. 22693
12/8/08
PTC, LLC
1535 Cogswell Street, Suite C25
Rockledge, Florida 32955
FBPE Certificate of Authorization NO. 25935

Approved as complying with the Florida Building Code
Date 03/04/2009
NOA# 08-0717.02
Miami Dade Product Control Division
By Marvin Perez