MIAMI-DADE COUNTY
BUILDING CODE COMPLIANCE OFFICE (BCCO)
PRODUCT CONTROL DIVISION

MIAMI-DADE COUNTY, FLORIDA
METRO-DADE FLAGLER BUILDING
140 WEST FLAGLER STREET, SUITE 1603
MIAMI, FLORIDA 33130-1563
(305) 375-2901 FAX (305) 372-6339
www.miamidade.gov/buldingcode

NOTICE OF ACCEPTANCE (NOA)

Amarr Garage Doors.
165 Carriage Court
Winston Salem, NC 27105

SCOPE: This NOA is being issued under the applicable rules and regulations governing the use of construction materials. The documentation submitted has been reviewed by Miami-Dade County Product Control Division and accepted by the Board of Rules and Appeals (BORA) to be used in Miami Dade County and other areas where allowed by the Authority Having Jurisdiction (AHJ).

This NOA shall not be valid after the expiration date stated below. The Miami-Dade County Product Control Division (In Miami Dade County) and/or the AHJ (in areas other than Miami Dade County) reserve the right to have this product or material tested for quality assurance purposes. If this product or material fails to perform in the accepted manner, the manufacturer will incur the expense of such testing and the AHJ may immediately revoke, modify, or suspend the use of such product or material within their jurisdiction. BORA reserves the right to revoke this acceptance, if it is determined by Miami-Dade County Product Control Division that this product or material fails to meet the requirements of the applicable building code.

This product is approved as described herein, and has been designed to comply with the Florida Building Code, including the High Velocity Hurricane Zone.

DESCRIPTION: Models 950/655 1000 & 2000 Steel Sectional Garage Door (9' Wide)

APPROVAL DOCUMENT: Drawing No. **IRC-9509-169-15**, titled "Model 950 Heritage, Model 655 Oak Summit, (24 GA) 1000, 2000, Short, Long, Flush and Bead Panels", sheets 1through 3 of 3, prepared by Amarr Garage Doors, dated 03/12/03, with revision A dated 06/11/08, signed and sealed by Tomas L. Shelmerdine, P.E., bearing the Miami-Dade County Product Control Revision stamp with the Notice of Acceptance number and expiration date by the Miami-Dade County Product Control Division.

MISSILE IMPACT RATING: Large and Small Missile Impact Resistant

LABELING: Each unit shall bear a permanent label with the manufacturer's name or logo, city, state and following statement: "Miami-Dade County Product Control Approved", unless otherwise noted herein.

RENEWAL of this NOA shall be considered after a renewal application has been filed and there has been no change in the applicable building code negatively affecting the performance of this product.

TERMINATION of this NOA will occur after the expiration date or if there has been a revision or change in the materials, use, and/or manufacture of the product or process. Misuse of this NOA as an endorsement of any product, for sales, advertising or any other purposes shall automatically terminate this NOA. Failure to comply with any section of this NOA shall be cause for termination and removal of NOA.

LIMITATION: This approval requires the manufacturer to do testing of all coils used to fabricate door panels under this Notice of Acceptance. A minimum of 2 specimens shall be cut from each coil and tensile tested according to ASTM E-8 by a Dade County approved laboratory selected and paid by the manufacturer. Every 3 months, four times a year, the manufacturer shall mail to this office: a copy of the tested reports with confirmation that the specimen were selected from coils at the manufacturer production facilities. And a notarized statement from the manufacturer that only coils with yield strength of 32,000 psi or more shall be used to make door panels for Dade County under this Notice of Acceptance.

ADVERTISEMENT: The NOA number preceded by the words Miami-Dade County, Florida, and followed by the expiration date may be displayed in advertising literature. If any portion of the NOA is displayed, then it shall be done in its entirety.

INSPECTION: A copy of this entire NOA shall be provided to the user by the manufacturer or its distributors and shall be available for inspection at the job site at the request of the Building Official.

This NOA **revises and renews NOA # 03-0502.03** and consists of this page 1 and evidence page E-1, as well as approval document mentioned above.

The submitted documentation was reviewed by **Carlos M. Utrera, P.E.**

MIAMI-DADE COUNTY APPROVED

7/28/08

NOA No 08-0718.02
Expiration Date: September 4, 2013
Approval Date: August 21, 2008

NOTICE OF ACCEPTANCE: EVIDENCE SUBMITTED

A. DRAWINGS

1. Drawing No. **IRC-9509-169-15**, titled "Model 950 Heritage, Model 655 Oak Summit (24 GA) 1000, 2000, Short, Long, Flush and Bead Panels", sheets 1through 3 of 3, prepared by Amarr Garage Doors, dated 03/12/03, with revision A dated 06/11/08, signed and sealed by Thomas L. Shelmerdine, P.E.

B. TESTS

1. Test reports on 1) Uniform Static Air Pressure Test, Loading per FBC TAS 202-94
   2) Large Missile Impact Test per FBC, TAS 201-94
   3) Cyclic Wind Pressure Loading per FBC, TAS 203-94

   along with marked-up drawings and installation diagram of 9'x 7' Model 950D Heritage with Durasafe, 24 ga. Sectional Steel Garage Door, prepared by American Test Lab, Inc., Test Report No. **ATL 0311.01-03R**, dated 04/15/03, signed and sealed by David W. Johnson, P.E.
2. Test report on Tensile Test per ASTM E8, prepared by Metallurgical, Inc., Test Report No. **3DM-297**, dated 04/09/03, signed by Robert Kelly.
3. Test report on Salt Spray per ASTM B117 of painted G40 galvanized coated panels, prepared by ETC Laboratories, Test Report No. **07-816-20337.0**, dated 03/24/08, signed by Joseph L. Doldan, P.E.

C. CALCULATIONS

1. Wood jamb attachment to structure calculations, complying with FBC-2004, prepared by Structural Solutions, P.A., dated 06/25/08, signed and sealed by Thomas L. Shelmerdine, P.E.

D. QUALITY ASSURANCE

1. Miami Dade Building Code Compliance Office (BCCO)

E. MATERIAL CERTIFICATIONS

1. None.

F. STATEMENTS

1. Statement letter of code conformance and no financial interest, issued by Structural Solutions, P.A., dated 06/30/08, signed and sealed by Thomas L. Shelmerdine, P.E.

G. OTHER

1. Notice of Acceptance No. **03-0502.03**, issued to Amarr Garage Doors, approved on 09/04/03 and expiring on 09/04/08.

7/28/08

Carlos M. Utrera, P.E.
Product Control Examiner
NOA No 08-0718.02
Expiration Date: September 4, 2013
Approval Date: August 21, 2008

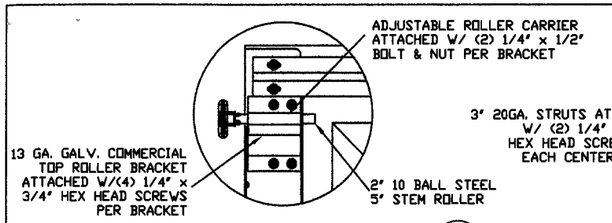

TYPICAL TOP FIXTURES (1)
N.T.S.

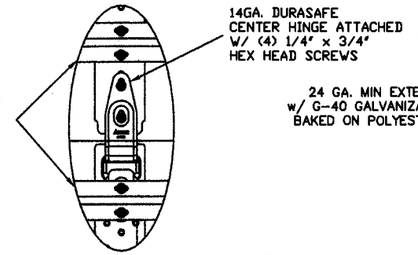

TYPICAL DURASAFE CENTER HINGE (2)
N.T.S.

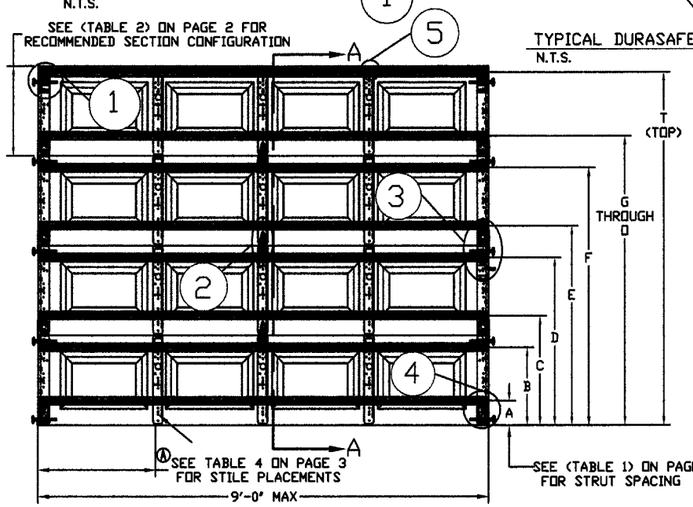

INSIDE ELEVATION
N.T.S.

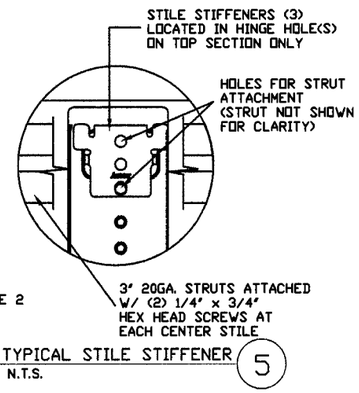

TYPICAL STILE STIFFENER (5)
N.T.S.

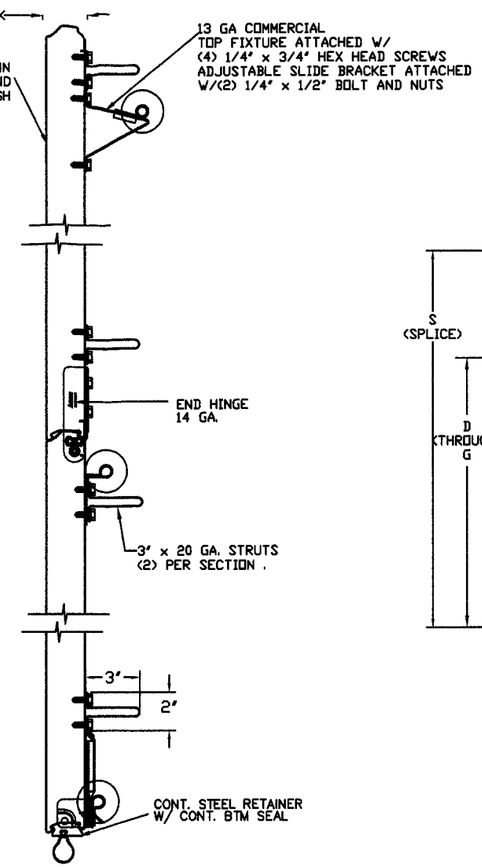

SECTION A-A (SIDE VIEW)
N.T.S.

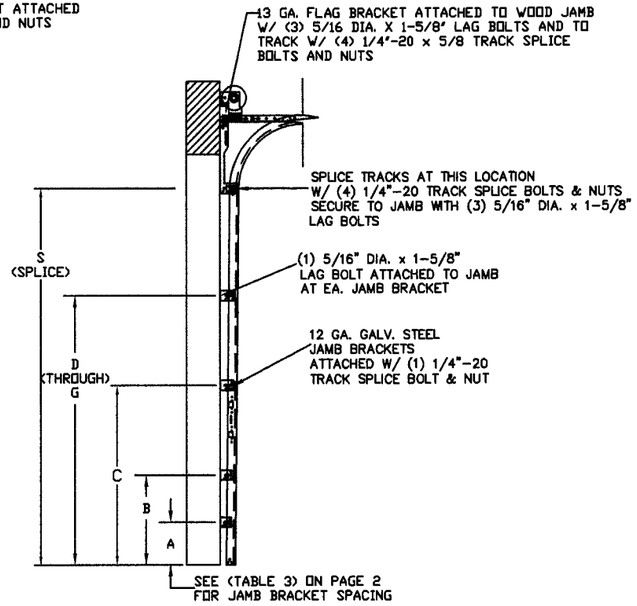

TRACK CONFIGURATION FOR 6'6" UP TO 14' TALL DOORS

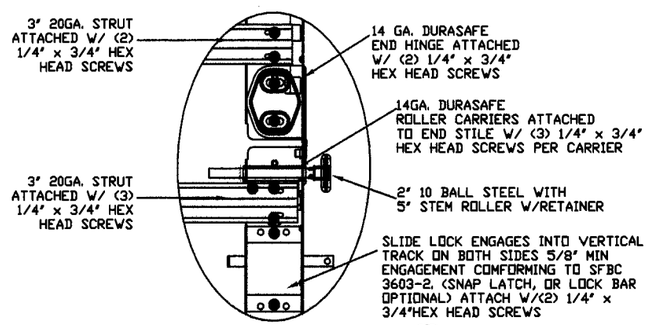

TYPICAL DURASAFE END HINGE (3)
N.T.S.

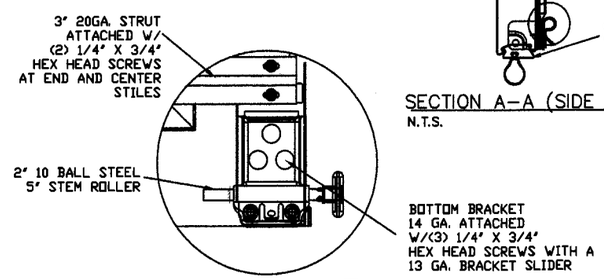

TYPICAL BOTTOM BRACKET (4)
N.T.S.

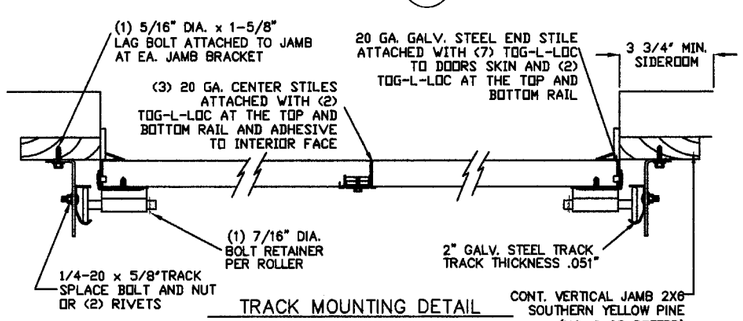

TRACK MOUNTING DETAIL
N.T.S.

Ⓐ WOOD JAMB ATTACHMENT TO STRUCTURE

2 X 6 VERTICAL JAMB ATTACHMENT TO WOOD FRAME STRUCTURE
5/16" X 3" LAG SCREWS STARTING 6" FROM ENDS THEN 24" O.C. (1 1/4" EMBEDMENT)

2 X 6 VERTICAL JAMB ATTACHMENT TO 2,000 PSI CONCRETE
HILTI KWIK BOLT 3/8" X 4" STARTING 6" FROM ENDS THEN 24" O.C. (2 1/2" EMBEDMENT)
HILTI SLEEVE ANCHOR 3/8" X 2-3/4" STARTING 6" FROM ENDS THEN 24" O.C. (1 1/4" EMBEDMENT)
ITW/RAMSET REDHEAD (TRU-BOLT) 3/8" X 4" STARTING 6" FROM ENDS THEN 24" O.C. (2 1/2" EMBEDMENT)

2 X 6 VERTICAL JAMB ATTACHMENT TO C-90 BLOCK
HILTI SLEEVE ANCHOR 3/8" X 2-3/4" STARTING 6" FROM ENDS THEN 24" O.C. (1 1/4" EMBEDMENT)
ITW/RAMSET TAPCON 1/4" X 2-3/4" STARTING 6" FROM ENDS, USE PAIRS OF FASTENERS (3" APART) AT 18" O.C.(1 1/4" EMBEDMENT)

*LAGS AND BOLTS CAN BE COUNTERSUNK TO PROVIDE A FLUSH MOUNTING SURFACE.
*PREPARATION OF WOOD JAMBS BY OTHERS
*MINIMUM ANCHOR EDGE DISTANCE 2-3/4"
*ANCHOR ALLOWABLE LOAD HAS NOT BEEN INCREASED BY 33% DUE TO SHORT TIME DURATION LOADING

PRODUCT REVISED
as complying with the Florida Building Code
Acceptance Rip 08-0718.02
Expiration Date 07/04/2013
By
Miami Dade Product Control Division

REV	DESCRIPTION OF REVISIONS	DATE	BY
A	AFFIRMATION TO 2007 FBC, MODEL 655 & FG3 ADDED	06-11-08	SKW

MAX SIZE
9' x 14'

DESIGN LOADS
+45.3 PSF
-51.2 PSF

LARGE MISSLE IMPACT RESISTANCE

Amarr
165 CARRIAGE COURT WINSTON-SALEM, N.C. 27105 WWW.AMARR.COM

MODEL 950 HERITAGE (24 GA) 1000, 2000
Ⓐ MODEL 655 OAK SUMMIT (24 GA) 1000, 2000
SHORT, LONG, FLUSH, AND BEAD PANELS

SIZE	DRAWN BY	DLJ	DATE	03/12/03	DRAWING NUMBER
B	CHECKED BY	AAE	DATE	03/12/03	IRC-9509-169-15

ENGINEER: THOMAS L. SHLEMERDINE P.E. LIC. No. 0048579 | SHEET 1 OF 3 Ⓐ

TABLE 1

DOOR HEIGHT	STRUT SPACING (BASED ON RECOMMENDED SECTION CONFIGURATION)															TOP
	A	B	C	D	E	F	G	H	I	J	K	L	M	N	O	T
6' 6"	5 1/2"	18"	25 3/8"	36"	43 3/8"	54"	61 3/8"									76 1/4"
7'	5 1/2"	18"	25 3/8"	39"	46 3/8"	60"	67 3/8"									82 1/4"
7' 6"	5 1/2"	15"	22 3/8"	33"	40 3/8"	51"	58 3/8"	69"	76 3/8"							88 1/4"
8'	5 1/2"	18"	25 3/8"	36"	43 3/8"	54"	61 3/8"	72"	79 3/8"							94 1/4"
8' 6"	5 1/2"	18"	25 3/8"	39"	46 3/8"	60"	67 3/8"	78"	85 3/8"							100 1/4"
9'	5 1/2"	15"	22 3/8"	33"	40 3/8"	51"	58 3/8"	69"	76 3/8"	87"	94 3/8"					106 1/4"
9' 6"	5 1/2"	18"	25 3/8"	36"	43 3/8"	54"	61 3/8"	72"	79 3/8"	90"	97 3/8"					112 1/4"
10'	5 1/2"	18"	25 3/8"	39"	46 3/8"	60"	67 3/8"	78"	85 3/8"	96"	103 3/8"					118 1/4'
10' 6"	5 1/2"	18"	25 3/8"	39"	46 3/8"	60"	67 3/8"	81"	88 3/8"	102"	109 3/8"					124 1/4"
11'	5 1/2"	18"	25 3/8"	36"	43 3/8"	54"	61 3/8"	72"	79 3/8"	90"	97 3/8"	108"	115 3/8"			130 1/4"
11' 6"	5 1/2"	18"	25 3/8"	39"	46 3/8"	60"	67 3/8"	78"	85 3/8"	96"	103 3/8"	114"	121 3/8"			136 1/4"
12'	5 1/2"	18"	25 3/8"	39"	46 3/8"	60"	67 3/8"	81"	88 3/8"	102"	109 3/8"	120"	127 3/8"			142 1/4"
12'6"	5 1/2"	18"	25 3/8"	36"	43 3/8"	54"	61 3/8"	72"	79 3/8"	90"	97 3/8"	108"	115 3/8"	126"	133 3/8"	148 1/4"
13'	5 1/2"	18"	25 3/8"	39"	46 3/8"	60"	67 3/8"	78"	85 3/8"	96"	103 3/8"	114"	121 3/8"	132"	139 3/8"	154 1/4"
13' 6"	5 1/2"	18"	25 3/8"	39"	46 3/8"	60"	67 3/8"	81"	88 3/8"	102"	109 3/8"	120"	127 3/8"	138"	145 3/8"	160 1/4'
14'	5 1/2"	18"	25 3/8"	39"	46 3/8"	60"	67 3/8"	81"	88 3/8"	102"	109 3/8"	123"	130 3/8"	144"	151 3/8"	166 1/4"

TABLE 2

DOOR HEIGHT	SECTION HEIGHTS							
	Btm	#2	#3	#4	#5	#6	#7	#8
14' 0"	21"	21"	21"	21"	21"	21"	21"	21"
13' 6"	21"	21"	21"	21"	21"	18"	18"	21"
13' 0"	21"	21"	21"	18"	18"	18"	18"	21"
12' 6"	21"	18"	18"	18"	18"	18"	18"	21"
12' 0"	21"	21"	21"	21"	21"	18"	21"	
11' 6"	21"	21"	21"	18"	18"	18"	21"	
11' 0"	21"	18"	18"	18"	18"	18"	21"	
10' 6"	21"	21"	21"	21"	21"	21"		
10' 0"	21"	21"	21"	18"	18"	21"		
9'6"	21"	18"	18"	18"	18"	21"		
9' 0"	18"	18"	18"	18"	18"	18"		
8' 6"	21"	21"	21"	18"	21"			
8' 0"	21"	18"	18"	18"	21"			
7' 6"	18"	18"	18"	18"	18"			
7' 0"	21"	21"	21"	21"				
6' 6"	21"	18"	18"	21"				

TABLE 3

DOOR HEIGHT	TRACK ATTACHMENT								SPLICE
	A	B	C	D	E	F	G	H	S
6' 6"	10"	21"	39"	57"					70"
7'	10"	21"	42"	63"					76"
7' 6"	10"	18"	36"	54"	72"				82"
8'	10"	21"	39"	57"	75"				88"
8' 6"	10"	21"	42"	63"	81"				94"
9'	10"	18"	36"	54"	72"	90"			100"
9' 6"	10"	21"	39"	57"	75"	93"			106"
10'	10"	21"	42"	63"	81"	99"			112"
10' 6"	10"	21"	42"	63"	84"	105"			118"
11'	10"	21"	39"	57"	75"	93"	111"		124"
11' 6"	10"	21"	42"	63"	81"	99"	117"		130"
12'	10"	21"	42"	63"	84"	105"	123"		136"
12'6"	10"	21"	39"	57"	75"	93"	111"	129"	142"
13'	10"	21"	42"	63"	81"	99"	117"	135"	148"
13' 6"	10"	21"	42"	63"	84"	105"	123"	141"	154"
14'	10"	21"	42"	63"	84"	105"	126"	147"	160"

INTERIOR OF GARAGE

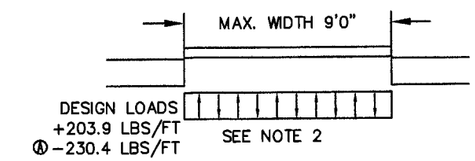

SPECIFICATIONS AND NOTES

1. ALL THE LOAD FROM THE DOOR IS TRANSFERRED TO THE VERTICAL TRACK, FROM THE TRACK THE LOAD IS TRANSFERRED TO THE VERTICAL JAMBS. THE HORIZONTAL JAMB OR HEADER RECEIVES NO PORTION OF THE LOAD TRANSFERRED FROM THE DOOR.
2. EACH VERTICAL JAMBS RECEIVES MAXIMUM DESIGN LOADS OF: +203.9 LBS/FT & −230.4 LBS/FT
3. DOOR AND HARDWARE WILL BE DESIGNED, MANUFACTURED AND INSTALLED WITH STANDARDS AS SET FORTH BY DASMA.
4. DOOR SECTIONS SHALL BE 24 GA. (.024) MIN. EXTERIOR SKIN ROLLED FORMED, G−40 GALVANIZATION W/ BAKED ON POLYESTER FINISH
5. DOORS UP TO 7'0" HIGH CONSIST OF (4) SECTIONS AS SHOWN. USE (2) 3" 20 GA STRUTS PER SECTION
6. DOORS OVER (4) SECTIONS REFER TO TABLES 1 AND 2 ON PAGE 2
7. SUPPORTING STRUCTURAL ELEMENTS SHALL BE DESIGNED BY A REGISTRED PROFESSIONAL ENGINEER FOR WIND LOADS INDICATED ON THIS DRAWING IN ADDITION TO OTHER LOADINGS.

Ⓐ 8. THE METHOD OF TESTING WAS IN SUBSTANTIAL CONFORMANCE WITH THE PROCEDURES DESCRIBED IN ASTM E330−02, ASCE 7−05, AND FLA. BUILDING CODE PROTOCALS TAS 201, 202, 203.

9. THIS APPROVAL REQUIRES THE MANUFACTURER TO DO TESTING OF ALL COILS USED TO FABRICATE DOOR PANELS UNDER THIS NOTICE OF ACCEPTANCE. A MINIMUM OF 2 SPECIMENS SHALL BE CUT FROM EACH COIL AND TENSILE TESTED ACCORDING TO ASTM E−8 BY A DADE COUNTY APPROVED LAB SELECTED AND PAID BY THE MANUFACTURER. EVERY 3 MONTHS, 4 TIMES A YEAR, THE MANUFACTURER SHALL MAIL TO THIS OFFICE: A COPY OF THE TEST REPORTS WITH CONFIRMATION THAT THE SPECIMENS WERE SELECTED FROM COILS AT THE MANUFACTURER PRODUCTION FACILITIES. AND A NOTARIZED STATEMENT FROM THE MANUFACTURER THAT ONLY COILS WITH YIELD STRENGTH OF 32,000 PSI OR MORE SHALL BE USED TO MAKE DOOR PANELS FOR DADE COUNTY UNDER THIS NOTICE OF ACCEPTANCE.

REV	DESCRIPTION OF REVISIONS	DATE	BY
A	AFFIRMATION TO 2007 FBC, MODEL 655 & PG3 ADDED	06-11-08	SKW

MAX SIZE
9' x 14'

DESIGN LOADS
+45.3 PSF
−51.2 PSF

LARGE MISSLE IMPACT RESISTANCE

6/30/08

PRODUCT REVISED
as complying with the Florida Building Code
Acceptance No 08-0718.07
Expiration Date 07/04/2013
By
Miami Dade Product Control Division

Amarr

165 CARRIAGE COURT WINSTON-SALEM, N.C. 27105 WWW.AMARR.COM

MODEL 950 HERITAGE (24 GA) 1000, 2000
Ⓐ MODEL 655 OAK SUMMIT (24 GA) 1000, 2000
SHORT, LONG, FLUSH, AND BEAD PANELS

SIZE	DRAWN BY	DLJ	DATE	03/12/03	DRAWING NUMBER
B	CHECKED BY	AAE	DATE	03/12/03	IRC-9509-169-15

ENGINEER: THOMAS L. SHLEMERDINE P.E. LIC. No. 0048579 | SHEET 2 OF 3 Ⓐ

®TABLE 4

Section Width (ft)	Panel Type	Center Stile Location (Measured from Left Edge)		
		1st (in)	2st (in)	3rd (in)
8' 0	Short	24.812	48.000	71.188
8' 0	Long	24.000	48.000	72.000
8' 0	Bead	24.625	48.000	71.375
8' 2	Short	24.316	49.000	73.684
8' 2	Long	24.500	49.000	73.500
8' 2	Bead	25.125	49.000	72.875
8' 4	Short	24.580	50.000	75.420
8' 4	Long	25.000	50.000	75.000
8' 4	Bead	25.625	50.000	74.375
8' 6	Short	26.029	51.000	75.971
8' 6	Long	25.500	51.000	76.500
8' 6	Bead	26.125	51.000	75.875
8' 8	Short	26.659	52.000	77.341
8' 8	Long	26.000	52.000	78.000
8' 8	Bead	26.625	52.000	77.375
8' 10	Short	27.034	53.000	78.966
8' 10	Long	26.500	53.000	79.500
8' 10	Bead	27.125	53.000	78.875
9' 0	Short	27.596	54.000	80.404
9' 0	Long	27.000	54.000	81.000
9' 0	Bead	27.625	54.000	80.375

PRODUCT REVISED
as complying with the Florida
Building Code
Acceptance No. 08-0718.02
Expiration Date 09/04/2013
By
Miami Dade Product Control
Division

REV	DESCRIPTION OF REVISIONS	DATE	BY
A	AFFIRMATION TO 2007 FBC, MODEL 655 & PG3 ADDED	06-11-08	SKW

MAX SIZE
9' x 14'

DESIGN LOADS
+45.3 PSF
-51.2 PSF

LARGE MISSLE
IMPACT
RESISTANCE

Amarr

165 CARRIAGE COURT WINSTON-SALEM, N.C. 27105 WWW.AMARR.COM

MODEL 950 HERITAGE (24 GA) 1000, 2000
®MODEL 655 OAK SUMMIT (24 GA) 1000, 2000
SHORT, LONG, FLUSH, AND BEAD PANELS

SIZE	DRAWN BY DLJ	DATE 03/12/03	DRAWING NUMBER
B	CHECKED BY AAE	DATE 03/12/03	IRC-9509-169-15

ENGINEER: THOMAS L. SHLEMERDINE P.E. LIC. No. 0048579 | SHEET 3 OF 3 ®