MIAMI-DADE COUNTY

BUILDING CODE COMPLIANCE OFFICE (BCCO)
PRODUCT CONTROL DIVISION

MIAMI-DADE COUNTY, FLORIDA
METRO-DADE FLAGLER BUILDING
140 WEST FLAGLER STREET, SUITE 1603
MIAMI, FLORIDA 33130-1563
(305) 375-2901 FAX (305) 375-2908
www.miamidade.gov/buildingcode

NOTICE OF ACCEPTANCE (NOA)

GlassWall, LLC
3550 N. W. 49 Street
Miami, FL 33142

SCOPE:

This NOA is being issued under the applicable rules and regulations governing the use of construction materials. The documentation submitted has been reviewed by Miami-Dade County Product Control Division and accepted by the Board of Rules and Appeals (BORA) to be used in Miami Dade County and other areas where allowed by the Authority Having Jurisdiction (AHJ).

This NOA shall not be valid after the expiration date stated below. The Miami-Dade County Product Control Division (In Miami Dade County) and/or the AHJ (in areas other than Miami Dade County) reserve the right to have this product or material tested for quality assurance purposes. If this product or material fails to perform in the accepted manner, the manufacturer will incur the expense of such testing and the AHJ may immediately revoke, modify, or suspend the use of such product or material within their jurisdiction. BORA reserves the right to revoke this acceptance, if it is determined by Miami-Dade County Product Control Division that this product or material fails to meet the requirements of the applicable building code.

This product is approved as described herein, and has been designed to comply with the Florida Building Code, including the High Velocity Hurricane Zone.

DESCRIPTION: Series "100" Aluminum Sliding Glass Door w/wo Head Receptor -L.M.I.

Limitation:

1. Door without Head Receptor is limited to door height=110" Max

APPROVAL DOCUMENT: Drawing No. **W02-0157**, titled "Series 100' Aluminum Sliding Glass Door", sheets 1 through 7 of 7, dated 02/11/02 and last revised on 08-25-08, prepared by manufacturer, signed and sealed by Kelvyn A. Whitfield, P.E., bearing the Miami-Dade County Product Control Revision stamp with the Notice of Acceptance number and expiration date by the Miami-Dade County Product Control Division.

MISSILE IMPACT RATING: Large Missile Impact Resistant

LABELING: Each unit shall bear a permanent label with the manufacturer's name or logo, city, state and following statement: "Miami-Dade County Product Control Approved", unless otherwise noted herein.

RENEWAL of this NOA shall be considered after a renewal application has been filed and there has been no change in the applicable building code negatively affecting the performance of this product.

TERMINATION of this NOA will occur after the expiration date or if there has been a revision or change in the materials, use, and/or manufacture of the product or process. Misuse of this NOA as an endorsement of any product, for sales, advertising or any other purposes shall automatically terminate this NOA. Failure to comply with any section of this NOA shall be cause for termination and removal of NOA.

ADVERTISEMENT: The NOA number preceded by the words Miami-Dade County, Florida, and followed by the expiration date may be displayed in advertising literature. If any portion of the NOA is displayed, then it shall be done in its entirety.

INSPECTION: A copy of this entire NOA shall be provided to the user by the manufacturer or its distributors and shall be available for inspection at the job site at the request of the Building Official.

This NOA **revises** & **replaces** NOA # **06-1121.09** consists of this page 1 and evidence pages E-1 & E-2, as well as approval document mentioned above.

The submitted documentation was reviewed by **Ishaq I. Chanda, P.E.**

MIAMI-DADE COUNTY APPROVED

8/26/08

NOTICE OF ACCEPTANCE: EVIDENCE SUBMITTED

A. DRAWINGS (transferred from file # **06-1121.09**)

1. Manufacturer's die drawings and sections.
2. Drawing No. **W02-0157**, titled "Series 100' Aluminum Sliding Glass Door", sheets 1 through 7 of 7, dated 02/11/02 and last revised on 08-25-08, prepared by manufacturer, signed and sealed by Kelvyn A. Whitfield, P.E.

B. TESTS

1. Test reports (transferred from file # **06-1121.09) Original test conducted per SFBC, PA 201, 202 and 203-94, now termed as FBC, TAS 201, 202 and 203-94.**
   1) Air Infiltration Test, per FBC, TAS 202-94
   2) Uniform Structural load Test, Loading per FBC, TAS 202-94
   3) Water Resistance Test, per FBC, TAS 202-94
   4) Large Missile Impact Test per FBC, TAS 201-94
   5) Small Missile Impact Test per FBC, TAS 201-94
   6) Cyclic Wind Pressure Loading per FBC, TAS 203-94

   along with marked-up drawings and installation diagram of alum OXXO SGD w/o Head receptor, prepared by Construction Testing Corporation, Test Report No. **01-001**, dated March 23, 2001, signed and sealed by Yamil G. Kuri, P.E.
2. Test reports on 1) Air Infiltration Test, per FBC, TAS 202-94
   2) Uniform Static Air Pressure Test, Loading per FBC TAS 202-94
   3) Water Resistance Test, per FBC, TAS 202-94
   4) Large Missile Impact Test per FBC, TAS 201-94
   5) Cyclic Wind Pressure Loading per FBC, TAS 203-94
   6) Forced Entry Test, per FBC 2411 3.2.1 (b) and TAS 202-94

   along with marked-up drawings and installation diagram of an aluminum sliding glass door w/ Head receptor, prepared by Fenestration Testing Laboratory, Inc., Test Report No. **FTL-4449**, dated 01/17/05, signed and sealed by Edmundo Largaespada, P.E.
3. Test reports
   1) Air Infiltration Test, per FBC, TAS 202-94
   2) Uniform Static Air Pressure Test, Loading per FBC TAS 202-94
   3) Water Resistance Test, per FBC, TAS 202-94
   4) Large Missile Impact Test per FBC, TAS 201-94
   5) Cyclic Wind Pressure Loading per FBC, TAS 203-94
   6) Forced Entry Test, per FBC 2411 3.2.1 (b) and TAS 202-94

   along with marked-up drawings and installation diagram of a series 100 aluminum sliding glass door w/ Head receptor, prepared by Fenestration Testing Laboratory, Inc., Test Report No. **FTL-3346**, dated February 6, 2002, **FTL-3347**, dated February 5, 2002, signed and sealed by Luis A. Figueredo, P.E.

Ishaq I. Chanda

Ishaq I. Chanda, P.E.
Product Control Examiner
NOA No 08-0722.06
Expiration Date: October 25, 2011
Approval Date: September 18, 2008

NOTICE OF ACCEPTANCE: EVIDENCE SUBMITTED

C. CALCULATIONS (transferred from file # 06-1121.09)

1. Anchor verification calculations and structural analysis dated 10-24-2006 and last revised on 04-02-2207, prepared, signed and sealed by Kelvyn A. Whitfield, P. E.
2. Glazing complies w/ ASTME-1300-02

D. QUALITY ASSURANCE

1. Miami Dade Building Code Compliance Office (BCCO).

E. MATERIAL CERTIFICATIONS

1. Notice of Acceptance No. **05-1208.02**, issued to E.I. Dupont de Nemorous & Co., Inc., for their "DuPont Butacite PVB ®", expiring on 12/11/10

F. STATEMENTS

1. Statement letters of conformance dated 07/18/08, prepared, signed and sealed by Kelvyn A. Whitfield, P.E.
2. Statement letters of conformance and "No financial interest", dated 10/24/06, prepared, signed and sealed by Kelvyn A. Whitfield, P.E.
3. Statement letter of Lab compliance, as part of test report, issued by above Testing Laboratories.

G. OTHER

1. This NOA **revises & replaces** NOA # **06-1121.09.**

Ishaq I. Chanda

Ishaq I. Chanda, P.E.
Product Control Examiner
NOA No 08-0722.06
Expiration Date: October 25, 2011
Approval Date: September 18, 2008

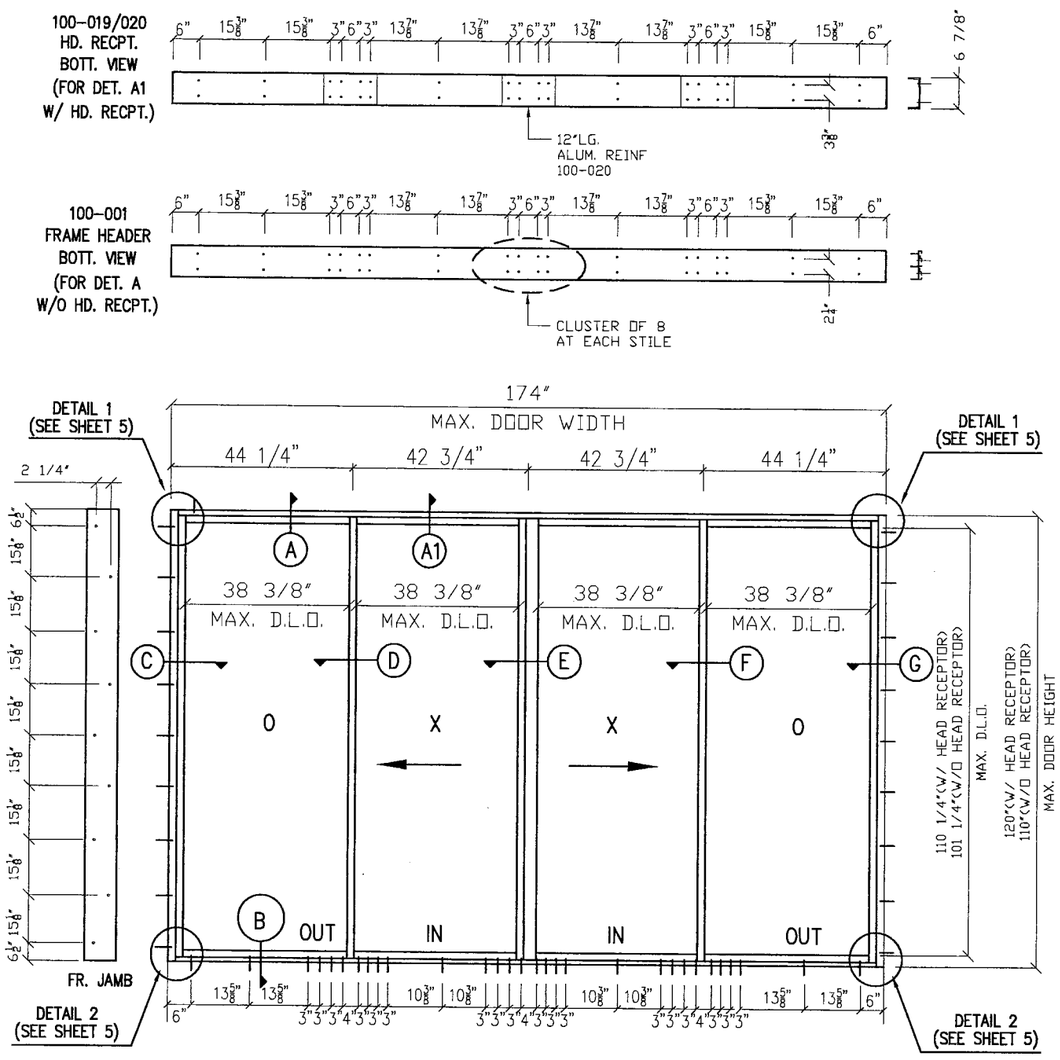

NOTES:

1. THIS SLIDING GLASS DOOR SYSTEM IS DESIGNED AND TESTED TO COMPLY WITH THE REQUIREMENTS OF THE FLORIDA BUILDING CODE 2007 CHAPTERS, CHAPTER 16. CHAPTER 24, UNDER THE SPECIFIC CONDITION SHOWN ON THIS DRAWING.

2. ALL EXTRUSIONS ARE ALUMINUM, 6005-T5 ALLOY, WITH A MINIMUM Fy OF 35,000 P.S.I. U.O.N. EXCEPT AS NOTED

3. APPROVAL BASED ON LABORATORY REPORT No. FTL-3346 AND FTL-4449 FROM FENESTRATION TESTING LAB, INC. AND TEST REPORT No. CTC-01-001 BY CONSTRUCTION TESTING CORP.

4. ALL ANCHORS ARE 5/16" DIA. ELCO ULTRA-CON 1 3/4" MIN. EMBEDMENT INTO CONCRETE FILLED BLOCK OR BETTER (USE 3,000 PSI CONCRETE MININUM)

5. ALL ANCHORS SPACINGS ARE MAXIMUN DIMENSION AND TYPICAL FOR ALL CONFIGURATIONS.

6. SHIMS USE HARD PLASTIC. 1/4" MAX.

PRODUCT REVISED
as complying with the Florida
Buiding Code
Acceptance No 08-0722.06
Expiration Date OCT 25, 2011
By Ishaq I. Chanda
Miami Dade Product Control
Division

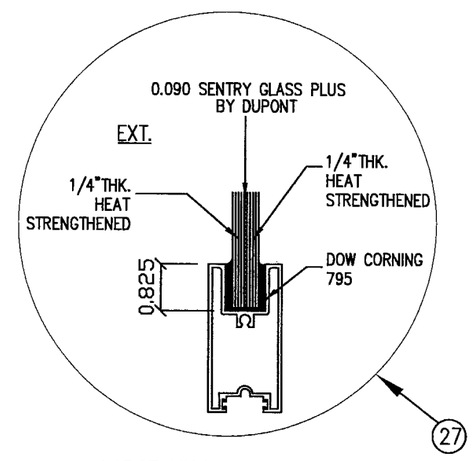

LARGE MISSILE GLAZING DETAIL
.590 LAMINATED GLASS

LARGE MISSILE

Design Load W/WO Head Receptor Capacity (P.S.F.) (see elevation)			
POSITIVE	NEGATIVE	HEAD ANCHORS	SILL ANCHORS
110	110	CLUSTER (8)	CLUSTER (8)

KELVYN A. WHITFIELD
MECHANICAL ENGINEER
1002 N.E 116 ST- MIAMI FL. 33161
TEL. (305) 659 1230
FAX. (305) 695 9976

GLASSWALL
3550 N.W. 49 St
MIAMI, FL. 33142
PHONE: (305) 638-5151

SERIES: 100 ALUMINUM
SLIDING GLASS DOOR
LARGE MISSILE IMPACT

JOB NO.: 02-0157

DWG. NO.: 02-0157

REVISIONS DESCRIPTION

NO.	DATE	
2	07/23/02	AS PER DADE COUNTY REQUIREMENTS
3	10/24/06	GENERAL REVISION.
4	02/12/07	AS PER DADE COUNTY REQUIREMENTS
5	07/18/08	REVISION, FRAME HEADER

DATE: 02/11/02

SCALE:

DWG. BY: D.M

SHEET 1 OF 7

KELVYN A. WHITFIELD
MECH. ENGINEER.
FLA. PE # 24140
8/25/8

OTHER APPROVED CONFIGURATIONS:

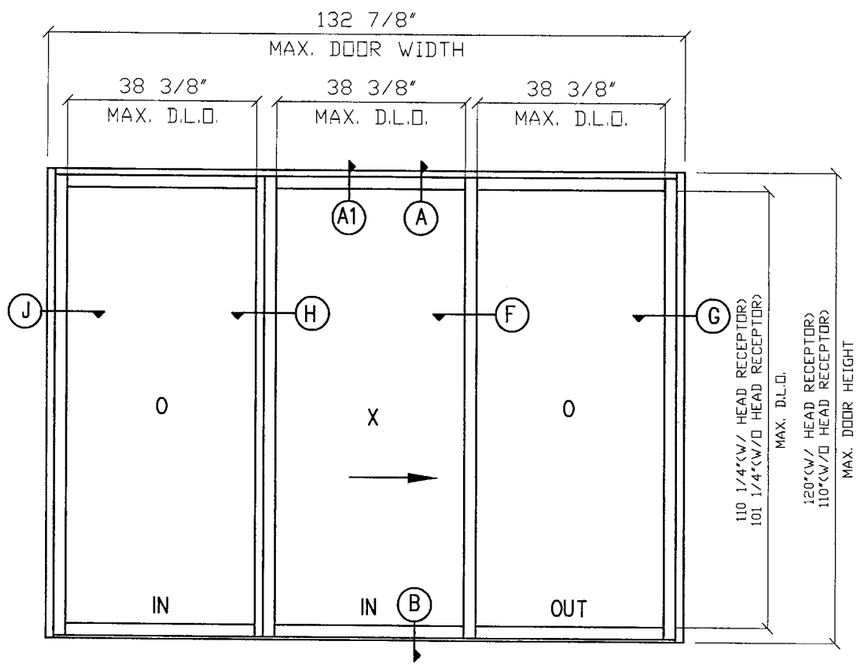

3-PANELS CONFIGURATIONS

$O\vec{X}O$ (AS-SHOWN)

$O\overleftarrow{X}O$

NOTE: SEE ELEVATION ON SHEET 1 FOR TYPICAL ANCHORS

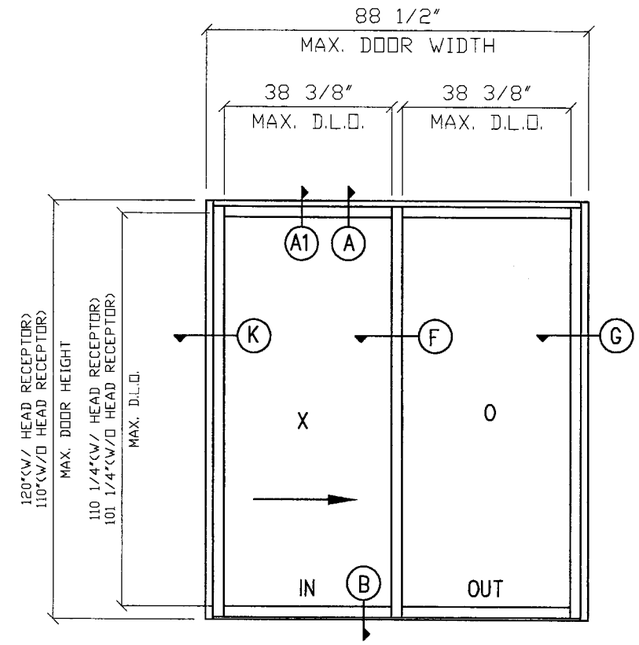

2-PANELS CONFIGURATIONS

$\vec{X}O$ (AS-SHOWN)

$O\overleftarrow{X}$

PRODUCT REVISED
as complying with the Florida
Buiding Code
Acceptance No 08-0722.06
Expiration Date OCT 25, 2011
By Ishaq I. Llanda
Miami Dade Product Control
Division

KELVYN A. WHITFIELD
MECHANICAL ENGINEER
1002 N.E 116 ST- MIAMI FL. 33161
TEL. (305) 659 1230
FAX. (305) 895 9976

GLASSWALL
3550 N.W. 49 St
MIAMI, FL. 33142
PHONE: (305) 638-5151

SERIES: 100 ALUMINUM
SLIDING GLASS DOOR
LARGE MISSILE IMPACT

JOB NO.: 02-0157

DWG. NO.: 02-0157

REVISIONS DESCRIPTION

NO.	DATE	
2	07/23/02	AS PER DADE COUNTY REQUIREMENTS
3	10/24/06	GENERAL REVISION.
4	02/12/07	AS PER DADE COUNTY REQUIREMENTS
5	07/18/08	REVISION, FRAME HEADER

DATE: 02/11/02

SCALE:

DWG. BY: D.M

SHEET 2 OF 7

KELVYN A. WHITFIELD
MECH. ENGINEER.
FLA. PE # 24140

5/25/8

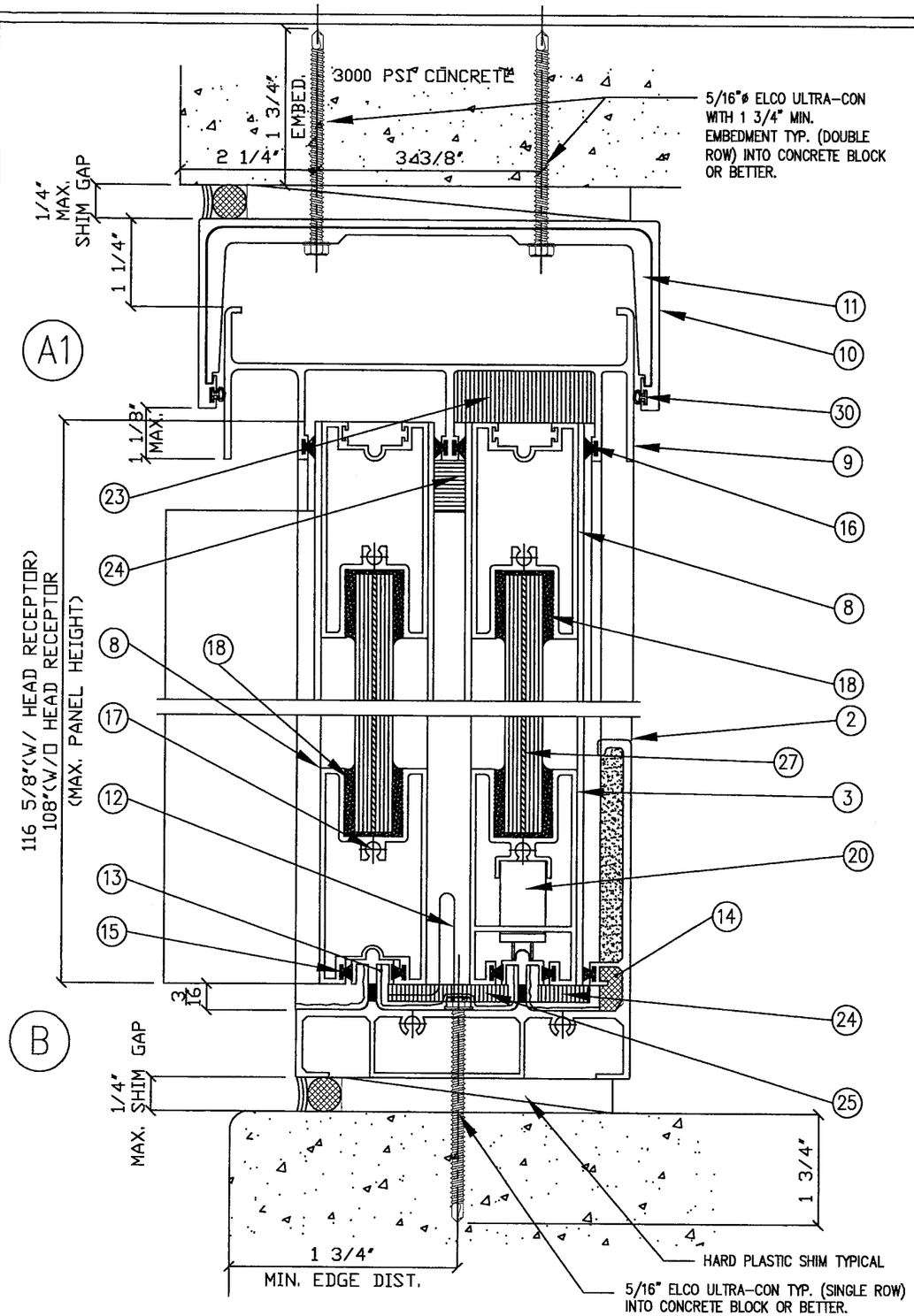

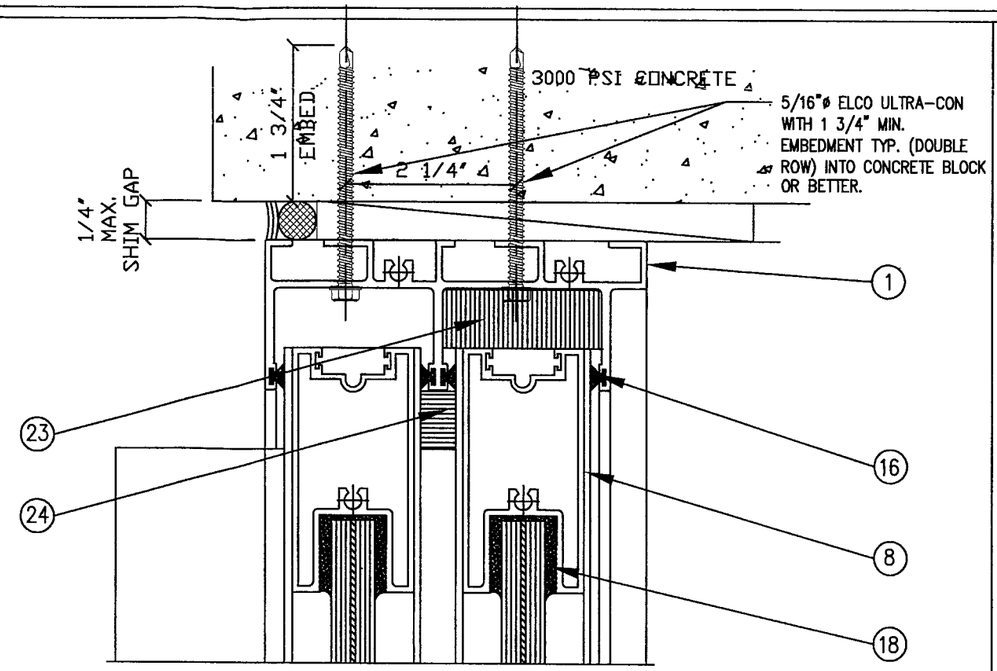

A DETAIL W/O HEAD RECEPTOR (MAX. 110" DOOR HEIGHT)

PRODUCT REVISED
as complying with the Florida
Buiding Code
Acceptance No 08-0722.06
Expiration Date OCT 25, 2011
By Ishaq I. Chauk
Miami Dade Product Control
Division

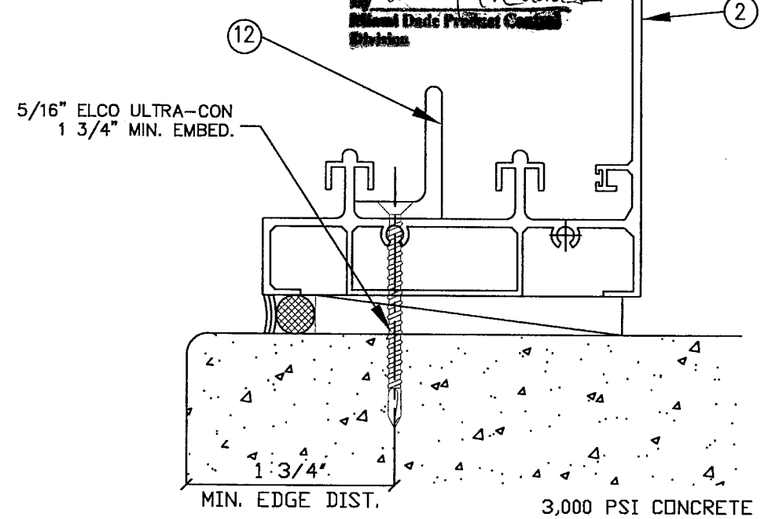

KELVYN A. WHITFIELD

MECHANICAL ENGINEER
1002 N.E 116 ST- MIAMI FL. 33161
TEL. (305) 659 1230
FAX. (305) 895 9976

GLASSWALL

3550 N.W. 49 St
MIAMI, FL. 33142
PHONE: (305) 638-5151

SERIES: 100 ALUMINUM SLIDING GLASS DOOR LARGE MISSILE IMPACT

JOB NO.: 02-0157

DWG. NO.: 02-0157

REVISIONS DESCRIPTION

NO.	DATE	
2	07/23/02	AS PER DADE COUNTY REQUIREMENTS
3	10/24/06	GENERAL REVISION.
4	02/12/07	AS PER DADE COUNTY REQUIREMENTS
5	07/18/08	REVISION, FRAME HEADER

DATE: 02/11/02

SCALE: N.T.S.

DWG. BY: D.M

SHEET 3 OF 7

KELVYN A. WHITFIELD
MECH. ENGINEER.
FLA. PE # 24140

8/25/8

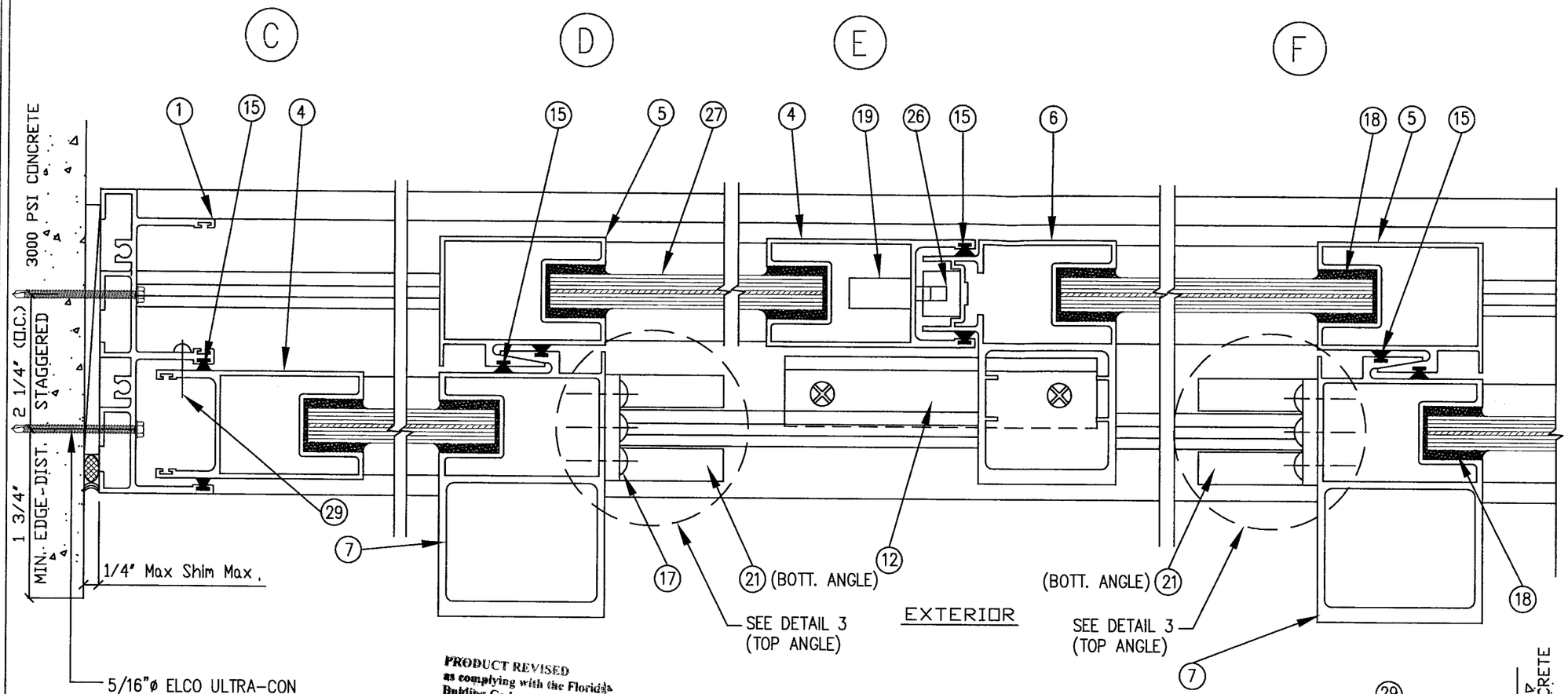

PRODUCT REVISED
as complying with the Florida Building Code
Acceptance No 08-0722.06
Expiration Date OCT 25 2011
By Ishag I. Chauk
Miami Dade Product Control Division

DETAIL 3: TOP ANGLE
(VIEW FROM BOTTOM)

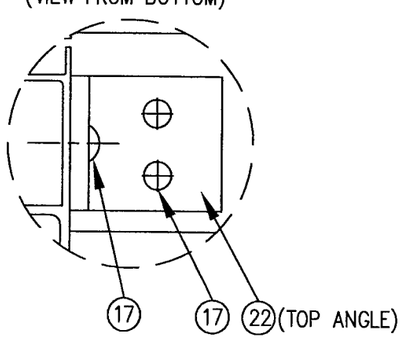

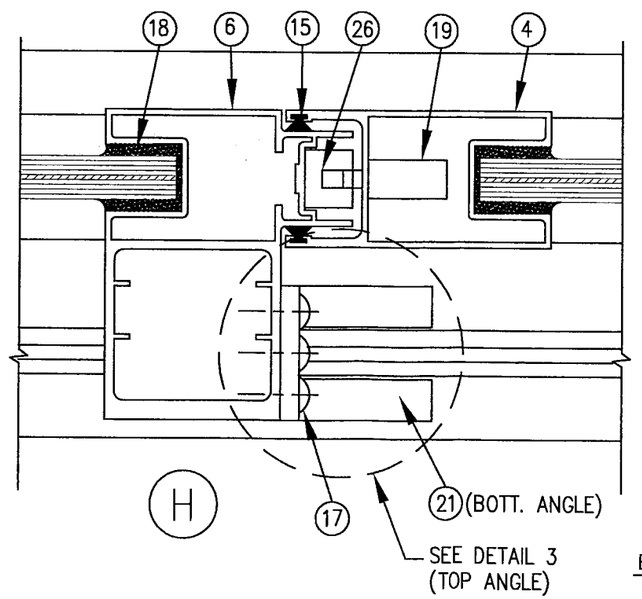

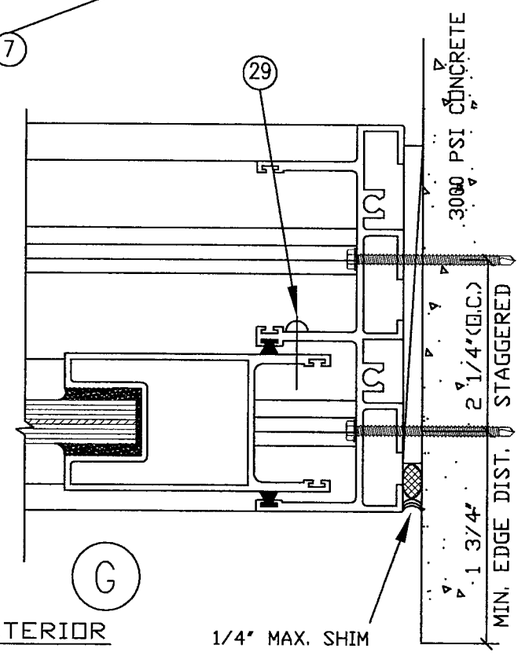

KELVYN A. WHITFIELD
MECHANICAL ENGINEER
1002 N.E 116 ST- MIAMI FL. 33161
TEL. (305) 659 1230
FAX. (305) 895 9976

GLASSWALL

3550 N.W. 49 St
MIAMI, FL. 33142
PHONE: (305) 638-5151

SERIES: 100 ALUMINUM SLIDING GLASS DOOR LARGE MISSILE IMPACT

JOB NO.: 02-0157
DWG. NO.: 02-0157

REVISIONS DESCRIPTION

NO.	DATE	
2	07/23/02	AS PER DADE COUNTY REQUIREMENTS
3	10/24/06	GENERAL REVISION.
4	02/12/07	AS PER DADE COUNTY REQUIREMENTS
5	07/18/08	REVISION, FRAME HEADER

DATE: 02/11/02
SCALE: N.T.S.
DWG. BY: D.M
SHEET 4 OF 7

KELVYN A. WHITFIELD
MECH. ENGINEER.
FLA. PE # 24140
8/25/8

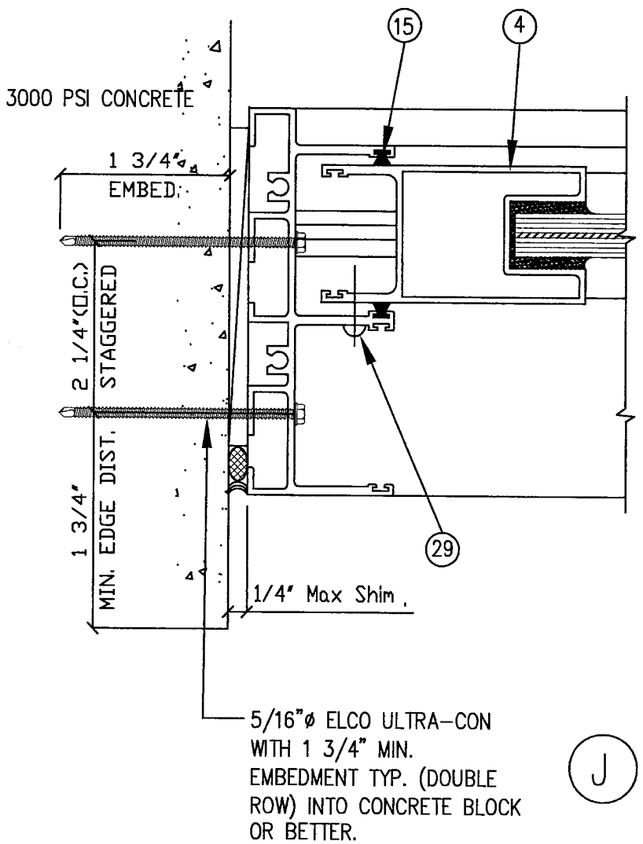

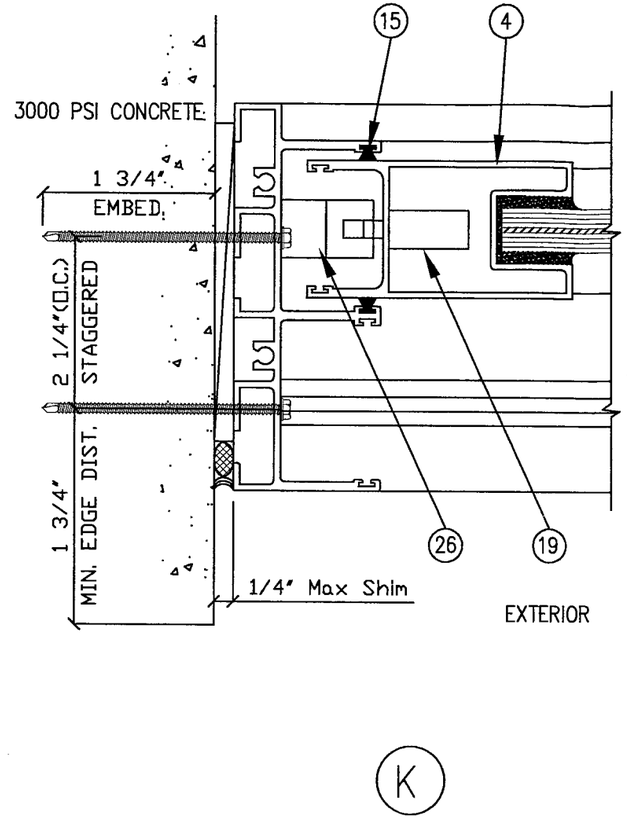

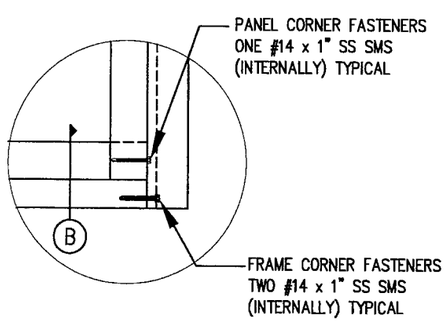

DETAIL 2

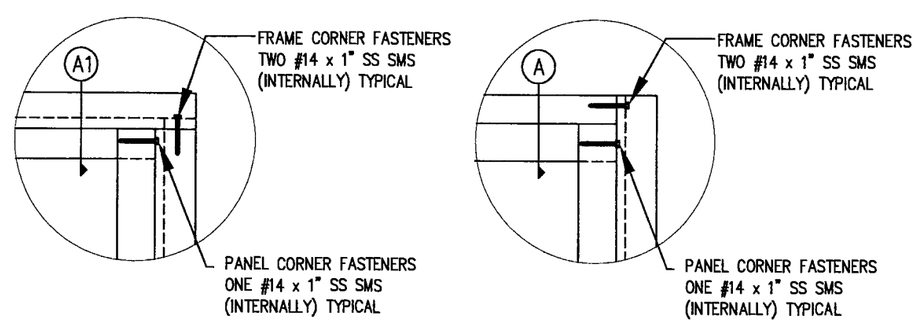

DETAIL 1

PRODUCT REVISED
as complying with the Florida Building Code
Acceptance No 08-0722.06
Expiration Date OCT 25, 2011
By Ishaq I. Chanda
Miami Dade Product Control Division

KELVYN A. WHITFIELD
MECHANICAL ENGINEER
1002 N.E 116 ST- MIAMI FL. 33161
TEL. (305) 659 1230
FAX. (305) 895 9976

GLASSWALL
3550 N.W. 49 St
MIAMI, FL. 33142
PHONE: (305) 638-5151

SERIES: 100 ALUMINUM SLIDING GLASS DOOR LARGE MISSILE IMPACT

JOB NO.: 02-0157
DWG. NO.: 02-0157

REVISIONS DESCRIPTION

NO.	DATE	
2	07/23/02	AS PER DADE COUNTY REQUIREMENTS
3	10/24/06	GENERAL REVISION.
4	02/12/07	AS PER DADE COUNTY REQUIREMENTS
5	07/18/08	REVISION, FRAME HEADER

DATE: 02/11/02
SCALE: N.T.S.
DWG. BY: D.M
SHEET 5 OF 7

KELVYN A. WHITFIELD
MECH. ENGINEER.
FLA. PE # 24140
8/25/08

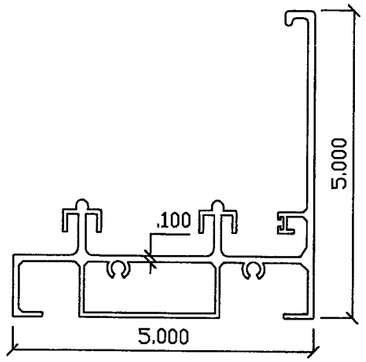

(2) Sill # 100-002A
HALF SCALE

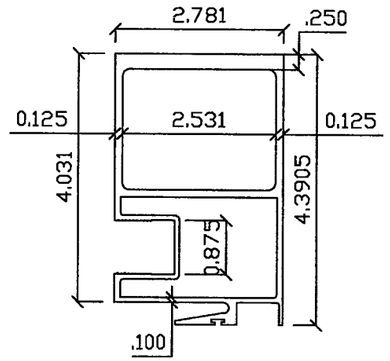

(7) Heavy Interlock # 100-007
HALF SCALE

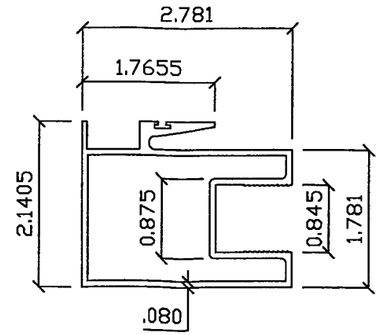

(5) Interlock # 100-005
HALF SCALE

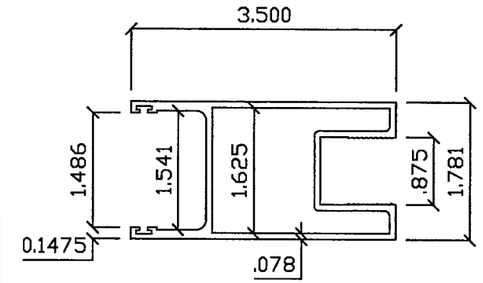

(4) Fixed & Lock Stile # 100-004
HALF SCALE

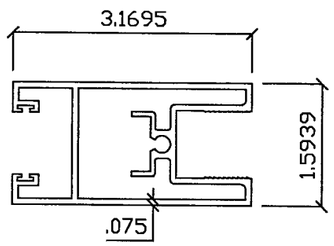

(3) Bottom Moving Panel # 100-003
HALF SCALE

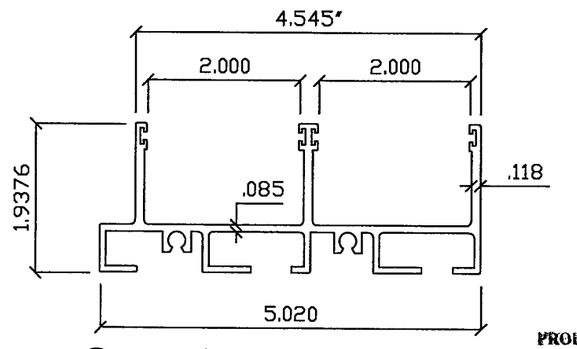

(1) Head / Jamb # 100-001A
HALF SCALE

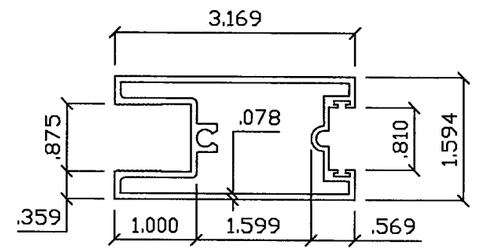

(8) Fixed Bottom # 100-008
HALF SCALE

PRODUCT REVISED
as complying with the Florida
Building Code
Acceptance No 08-0722.06
Expiration Date OCT 25, 2011
By Ishaq I. Chanda
Miami Dade Product Control
Division

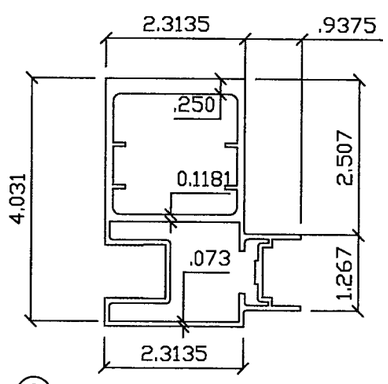

(6) Astragal # 100-006
HALF SCALE

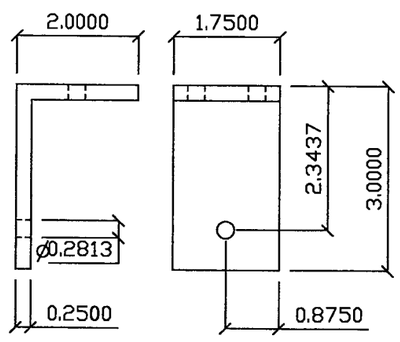

(22) AB-2 Aluminum Angle Top 6063-T6
HALF SCALE

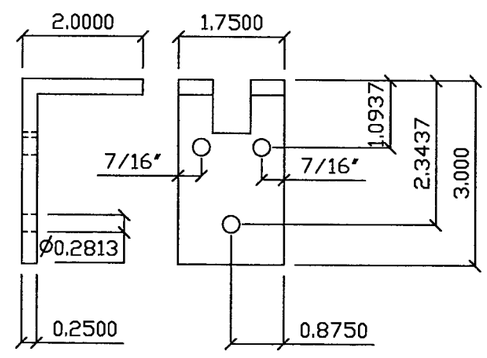

(21) AB-1 Aluminum Angle Bottom 6063-T6
HALF SCALE

KELVYN A. WHITFIELD
MECHANICAL ENGINEER
1002 N.E 116 ST- MIAMI FL. 33161
TEL. (305) 659 1230
FAX. (305) 895 9976

GLASSWALL
3550 N.W. 49 St
MIAMI, FL. 33142
PHONE: (305) 638-5151

SERIES: 100 ALUMINUM
SLIDING GLASS DOOR
LARGE MISSILE IMPACT

JOB NO.: 02-0157
DWG. NO.: 02-0157

REVISIONS DESCRIPTION

NO.	DATE	
2	07/23/02	AS PER DADE COUNTY REQUIREMENTS
3	10/24/06	GENERAL REVISION.
4	02/12/07	AS PER DADE COUNTY REQUIREMENTS
5	07/18/08	REVISION, FRAME HEADER

DATE: 02/11/02
SCALE: N.T.S.
DWG. BY: D.M
SHEET 6 OF 7

KELVYN A. WHITFIELD
MECH. ENGINEER.
FLA. PE # 24140
8/25/08

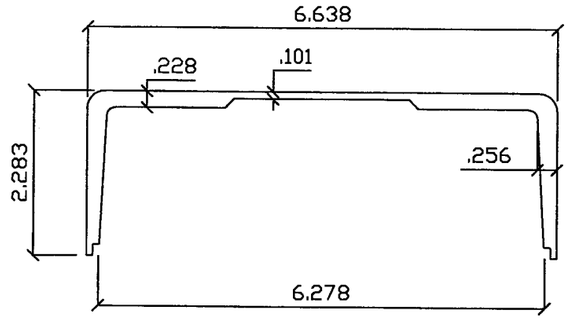

(11) Head Receptor Reinforcement # 100-020
HALF SCALE

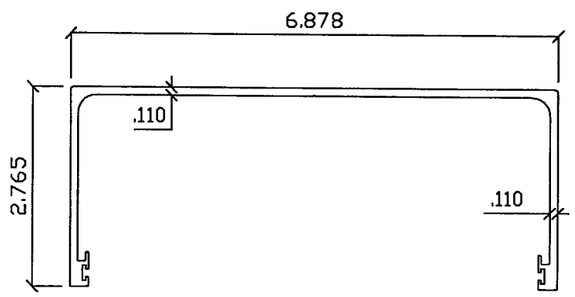

(10) Head Receptor # 100-019
HALF SCALE

SLIDING GLASS DOOR

Item #	Part Number	Part Name	Remarks
1	100-001A	Jamb / Head	Frame (use as head when no-head receptor)
2	100-002A	Sill	Frame
3	100-003	Bottom moving panel	Panel
4	100-004	Lock Stile	Panel
5	100-005	Interlock	Panel
6	100-006	Astragal	Panel
7	100-007	Heavy Interlock	Panel
8	100-008	Fix & Mov Top & Bottom	Panel
9	100-009	Head	Frame
10	100-019	Head Receptor	Frame
11	100-020	Reinforcement	Frame, LENGTH = 15"
12	100-012	Hurricane Clip	Only at OXXO (5 1/4" Lg), attached to frame sill using two 5/16" dia. Ultra-con.
13	100-013	Sill Chanel Clip I	Frame
14	100-014	Sill Chanel Clip II	Frame
15	568-61279	Fin Seal .270HT	Part #568-61279 - 00914-18701 Prototype Plastics
16	568-62379	Fin Seal .370HT	Part #568-62379 - 00914-18701 Prototype Plastics
17	Fastener	Screw	# 14 x 1" PH-PH SMS frame & panel assembly
18			Structural Silicone DC-795
19	D-60C	Lock	3 Point Martise Hook Lock
20	AR-50A	Wheel, SS	D & W Hardware (Attached with 2 #10 x 1/2" PH-PH-SMS-S/S
21	AB-1	Bottom Angle	Alum. Angle 1/4"x2"x3"x1 3/4" LG.
22	AB-2	Top Angle	Alum. Angle 1/4"x2"x3"x1 3/4" LG.
23	P1000AFK(PC)2	Pad	Ultrafab
24	P6309AFK(PC).75	Pad	Ultrafab
25	P5009AFK(PC)1.75	Pad	Ultrafab
26	KP-60	Keeper	
27		Glazing	0.590" Overall Lam. glass, 1/4 HS. + .090 SGP by Dupont + 1/4 HS.
29		Tie down	#10 x 3/4" LG. PH-PH SMS S-S (ONLY AT BOTTOM FIXED PANEL)
30	7P-448	Receptor Gasket	Prototype Plastic

PRODUCT REVISED
as complying with the Florida
Building Code
Acceptance No 08-0722.06
Expiration Date 09/25/2011
By Ishay I. Chand
Miami Dade Product Control
Division

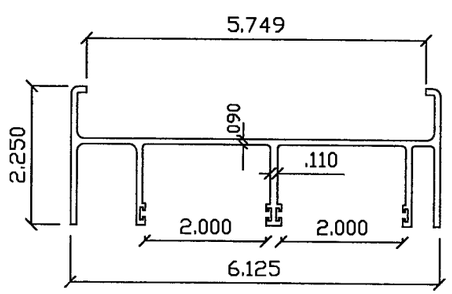

(9) Head # 100-009
HALF SCALE

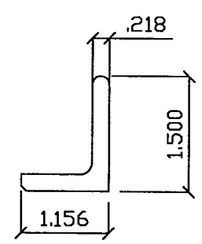

(12) Hurricane Clip # 100-012
HALF SCALE

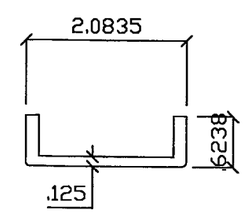

(13) Sill Chanel Clip # 100-013
HALF SCALE

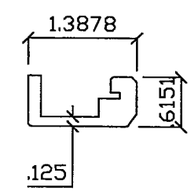

(14) Sill Chanel Clip II # 100-014
HALF SCALE

KELVYN A. WHITFIELD
MECHANICAL ENGINEER
1002 N.E 116 ST- MIAMI FL. 33161
TEL. (305) 659 1230
FAX. (305) 895 9976

GLASSWALL
3945 N.W. 32 AVE
MIAMI, FL. 33142
PHONE: (305) 638-5151

SERIES: 100 ALUMINUM
SLIDING GLASS DOOR
LARGE MISSILE IMPACT

JOB NO.: 02-0157
DWG. NO.: 02-0157

REVISIONS DESCRIPTION

NO.	DATE	
2	07/23/02	AS PER DADE COUNTY REQUIREMENTS
3	10/24/06	GENERAL REVISION.
4	02/12/07	AS PER DADE COUNTY REQUIREMENTS
5	07/18/08	REVISION, FRAME HEADER

DATE: 02/11/02
SCALE:
DWG. BY: D.M
SHEET 7 OF 7

KELVYN A. WHITFIELD
MECH. ENGINEER.
FLA. PE # 24140
8/25/8