MIAMI-DADE

BUILDING CODE COMPLIANCE OFFICE (BCCO)
PRODUCT CONTROL DIVISION

**MIAMI-DADE** COUNTY, FLORIDA
METRO-DADE FLAGLER BUILDING
**140 WEST FLAGLER STREET, SUITE 1603**
MIAMI, FLORIDA 33130-1563
(305) 375-2901 FAX (305) 375-2908

# NOTICE OF ACCEPTANCE (NOA)

**Bob Hilson and Company, Inc.**
**P.O. Box 901543**
**Homestead, FL. 33090**

**SCOPE:**
This NOA is being issued under the applicable rules and regulations governing the use of construction materials. The documentation submitted has been reviewed by Miami-Dade County Product Control Division and accepted by the Board of Rules and Appeals (BORA) to be used in Miami Dade County and other areas where allowed by the Authority Having Jurisdiction (AHJ).

This NOA shall not be valid after the expiration date stated below. The Miami-Dade County Product Control Division (In Miami Dade County) and/or the AHJ (in areas other than Miami Dade County) reserve the right to have this product or material tested for quality assurance purposes. If this product or material fails to perform in the accepted manner, the manufacturer will incur the expense of such testing and the AHJ may immediately revoke, modify, or suspend the use of such product or material within their jurisdiction. BORA reserves the right to revoke this acceptance, if it is determined by Miami-Dade County Product Control Division that this product or material fails to meet the requirements of the applicable building code.

This product is approved as described herein, and has been designed to comply with the Florida Building Code including the High Velocity Hurricane Zone of the Florida Building Code.

**DESCRIPTION: DMC 200 S- 24ga. Steel Panel over Steel deck**

**LABELING:** Each unit shall bear a permanent label with the manufacturer's name or logo, city, state and following statement: "Miami-Dade County Product Control Approved", unless otherwise noted herein.

**RENEWAL** of this NOA shall be considered after a renewal application has been filed and there has been no change in the applicable building code negatively affecting the performance of this product.

**TERMINATION** of this NOA will occur after the expiration date or if there has been a revision or change in the materials, use, and/or manufacture of the product or process. Misuse of this NOA as an endorsement of any product, for sales, advertising or any other purposes shall automatically terminate this NOA. Failure to comply with any section of this NOA shall be cause for termination and removal of NOA.

**ADVERTISEMENT:** The NOA number preceded by the words Miami-Dade County, Florida, and followed by the expiration date may be displayed in advertising literature. If any portion of the NOA is displayed, then it shall be done in its entirety.

**INSPECTION:** A copy of this entire NOA shall be provided to the user by the manufacturer or its distributors and shall be available for inspection at the job site at the request of the Building Official.

This NOA consists of pages 1 through 10.
The submitted documentation was reviewed by Alex Tigera.

## ROOFING SYSTEM APPROVAL:

| | |
|---|---|
| **Category:** | Roofing |
| **Sub-Category:** | Metal, Panels (Non-Structural) |
| **Material:** | Steel |
| **Deck Type:** | Steel |
| **Maximum Design Pressure** | **-151.75 psf** |

## TRADE NAMES OF PRODUCTS MANUFACTURED OR LABELED BY APPLICANT:

| Product | Dimensions | Test Specifications | Product Description |
|---|---|---|---|
| DMC 200 S – 24ga. Steel Panel | Length: various<br>Height: 2"<br>Width: 16"<br>Thickness: 24 ga. | TAS 110 | Corrosion resistant, galvanized steel or galvalume metal panel. |
| Panel Clip | Base:<br>Length: 4.5"<br>Height: 1-1/4"<br>Width: 1"<br>Thickness: 18ga<br>Upper Clip:<br>Length: 5.045"<br>Height: 0.929"<br>Width: 0.40"<br>Thickness: 22ga | | Two piece panel clip (base and upper clip) used for the field conditions of DMC 150 SS panel assembly. |
| Continuous Clip | Base:<br>Length: 120"<br>Height: 1-1/4"<br>Width: 1"<br>Thickness: 18ga<br>Upper Clip:<br>Length: 5.045"<br>Height: 0.929"<br>Width: 0.40"<br>Thickness: 22ga | | Two piece panel clip (base and upper clip) used for the perimeter and corner conditions of DMC 150 SS panel assembly. |

## EVIDENCE SUBMITTED:

| Test Agency | Test Identifier | Test Name/Report | Date |
|---|---|---|---|
| Akzo Nobel Coatings, Inc. | Lab Form | ASTM G 153 | |
| PRI Asphalt Technologies, Inc. | AKZC-001-02-01<br>AKZC-001-02-02<br>AKZC-001-02-03<br>AKZC-001-02-04<br>AKZC-001-02-05 | ASTM B 117 | 10/08/02 |
| PRI Asphalt Technologies, Inc. | HTL-014-02-01 | TAS 100 | 09/28/07 |
| Hurricane Test Laboratory, Inc. | 0287-0313-07 | TAS 125 | 08/10/07 |
| Hurricane Test Laboratory, Inc. | 0287-0209-07 | TAS 125 | 08/10/07 |

## APPROVED ASSEMBLIES:

| | |
|---|---|
| **System A(1):** | 200 Standing Seam 24 ga. 16" wide Panel |
| **Deck Type:** | Steel, Insulated |
| **Deck Description:** | Metal roof deck 22 MSG grade A. coated steel. Panel continuous over two or more spans without endlaps. |
| **Slope Range:** | 2": 12" or greater |
| **Maximum Uplift Pressure:** | **See Panel Attachments Below** |

| | |
|---|---|
| **Deck Attachment:** | Minimum 22 gage steel deck shall be secured 6" o.c. to structural supports spaced a maximum of 5 ft o.c. with **one (1)** #12 x 1-½" Hex Washer Head self drilling screws fastened at the bottom of each flute (6" o.c.). Deck sidelaps shall be fastened 6" o.c. with #12 x 1-½" Hex Head self drilling screws. |
| **Insulation:** | Minimum ¾" thick and Maximum 4" thick of an approved rigid board insulation with current NOA having a minimum 25psi compressive strength fastened with approved fasteners and plates. Fastening density shall be in compliance with applicable Building Code and Roofing Application Standard RAS 117. |
| **Underlayment:** | Minimum underlayment shall be an ASTM D 226 Type II installed with a minimum 4" side-lap and 6" end-laps. Underlayment shall be fastened with corrosion resistant tin-caps and #10 pancake head screws long enough to penetrate the deck, spaced 6" o.c. at all laps and two staggered rows 6" o.c. in the field of the roll or any approved underlayment having a current NOA. |
| **Fire Barrier Board:** | Any approved fire barrier having a current NOA, or for class A or B fire rating, install minimum ¼" thick Georgia Pacific "Dens Deck" (with current NOA) or minimum 4mm thick of Tritex, RockRoof (with current NOA) or $^{5}/_{8}$" water resistant type X gypsum sheathing with treated core and facer. |
| **Valleys:** | Valley construction shall be in compliance with Roofing Application Standard RAS 133 and with the current published installation instructions and details in DMC Association of Regional Manufacturers Installation Manual. |
| **Metal Panels and Accessories:** | Install the "DMC 200 S- 24ga. Steel Panel" panels including flashing penetrations, valleys, end laps and accessories in compliance "DMC Association of Regional Manufacturers" current, published installation instructions and in compliance with the minimum requirements detailed in Roofing Application Standard RAS 133. |
| **Field Conditions:** | Panels shall be secured along the male rib with approved panel clip (base and upper clip) with two corrosion resistant #10 pancake head fasteners of sufficient length to penetrate through the sheathing a minimum of $^{3}/_{16}$". The panel clips were placed at a spacing listed of 24" on center starting 3" from panel end. The female rib of panel is placed over the male/clip assembly and seamed 180°. See Detail A herein. |
| **Maximum Design Pressure (Field):** | **-88 psf (see General Limitation #1).** |

| | |
|---|---|
| **Perimeter and Corner Conditions:** | Panels shall be secured along the male rib with approved continuous clip with two corrosion resistant #10 pancake head fasteners of sufficient length to penetrate through the sheathing a minimum of $^{3}/_{16}$" at 12" o.c. The upper clip placement along the continuous clip is at 12" o.c. The female rib of panel is snapped over the male rib of panel. See Detail B herein. |
| **Maximum Design Pressure (Perimeter and Corner):** | **-121.75 psf (see General Limitation #1).** |

| | |
|---|---|
| **System A(2):** | 200 Standing Seam 24 ga. 16" wide Panel |
| **Deck Type:** | Steel, Non-Insulated |
| **Deck Description:** | Metal roof deck 22 MSG grade A. coated steel. Panel continuous over two or more spans without endlaps. |
| **Slope Range:** | 2": 12" or greater |
| **Maximum Uplift Pressure:** | **See Panel Attachments Below** |

| | |
|---|---|
| **Deck Attachment:** | Minimum 22 gage steel deck shall be secured 6" o.c. to structural supports spaced a maximum of 5 ft o.c. with **one (1)** #12 x 1-½" Hex Washer Head self drilling screws fastened at the bottom of each flute (6" o.c.). Deck sidelaps shall be fastened 6" o.c. with #12 x 1-½" Hex Head self drilling screws. |
| **Underlayment:** | Minimum underlayment shall be an ASTM D 226 Type II installed with a minimum 4" side-lap and 6" end-laps. Underlayment shall be fastened with corrosion resistant tin-caps and #10 pancake head screws long enough to penetrate the deck, spaced 6" o.c. at all laps and two staggered rows 6" o.c. in the field of the roll or any approved underlayment having a current NOA. |
| **Fire Barrier Board:** | Any approved fire barrier having a current NOA, or for class A or B fire rating, install minimum ¼" thick Georgia Pacific "Dens Deck" (with current NOA) or minimum 4mm thick of Tritex, RockRoof (with current NOA) or $^5/_8$" water resistant type X gypsum sheathing with treated core and facer. |
| **Valleys:** | Valley construction shall be in compliance with Roofing Application Standard RAS 133 and with the current published installation instructions and details in DMC Association of Regional Manufacturers Installation Manual. |
| **Metal Panels and Accessories:** | Install the "DMC 200 S- 24ga. Steel Panel" panels including flashing penetrations, valleys, end laps and accessories in compliance "DMC Association of Regional Manufacturers" current, published installation instructions and in compliance with the minimum requirements detailed in Roofing Application Standard RAS 133. |
| **Field Conditions:** | Panels shall be secured along the male rib with approved panel clip (base and upper clip) with two corrosion resistant #10 pancake head fasteners of sufficient length to penetrate through the sheathing a minimum of $^3/_{16}$". The panel clips were placed at a spacing listed of 24" on center starting 3" from panel end. The female rib of panel is placed over the male/clip assembly and seamed 180°. See Detail A herein. |
| **Maximum Design Pressure (Field):** | **-91.75 psf (see General Limitation #1).** |

| | |
|---|---|
| **Perimeter and Corner Conditions:** | Panels shall be secured along the male rib with approved continuous clip with two corrosion resistant #10 pancake head fasteners of sufficient length to penetrate through the sheathing a minimum of $^{3}/_{16}$" at 12" o.c. The upper clip placement along the continuous clip is at 12" o.c. The female rib of panel is snapped over the male rib of panel. See Detail B herein. |
| **Maximum Design Pressure (Perimeter and Corner):** | **-151.75 psf (see General Limitation #1).** |

## LIMITATIONS

1 The maximum designed pressure listed herein shall be applicable to all roof pressure zones (i.e. field, perimeters, and corners). Neither rational analysis, nor extrapolation shall be permitted for enhanced fastening at enhanced pressure zones (i.e. perimeters, extended corners and corners).

2. Panels may be rolls formed in continuous lengths from eave to ridge. Maximum lengths shall be as described in Roofing Application Standard RAS 133

3. All panels shall be permanently labeled with the manufacturer's name and/or logo, and the following statement: "Miami-Dade County Product Control Approved" **or** with the Miami-Dade County Product Control Seal as seen below. All clips shall be permanently labeled with the manufacturer's name and/or logo, and/or model.

MIAMI-DADE COUNTY
APPROVED

4. Fire classification is not part of this acceptance; refer to a current Approved Roofing Materials Directory for fire ratings of this product.

5. All products listed herein shall have a quality assurance audit in accordance with the Florida Building Code and Rule 9B-72 of the Florida Administrative Code.

6. Panels may be jobsite roll formed with machine model **#030508** from DMC Association of Regional Manufacturers.

## PROFILE DRAWINGS

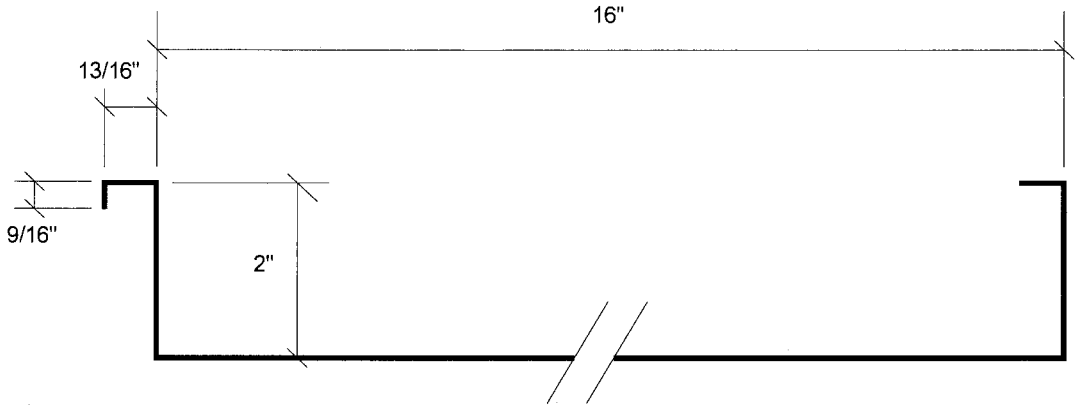


**DCM 200 S – 24GA. STEEL PANEL**

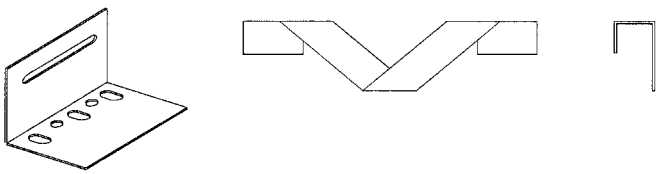

**PANEL CLIP**

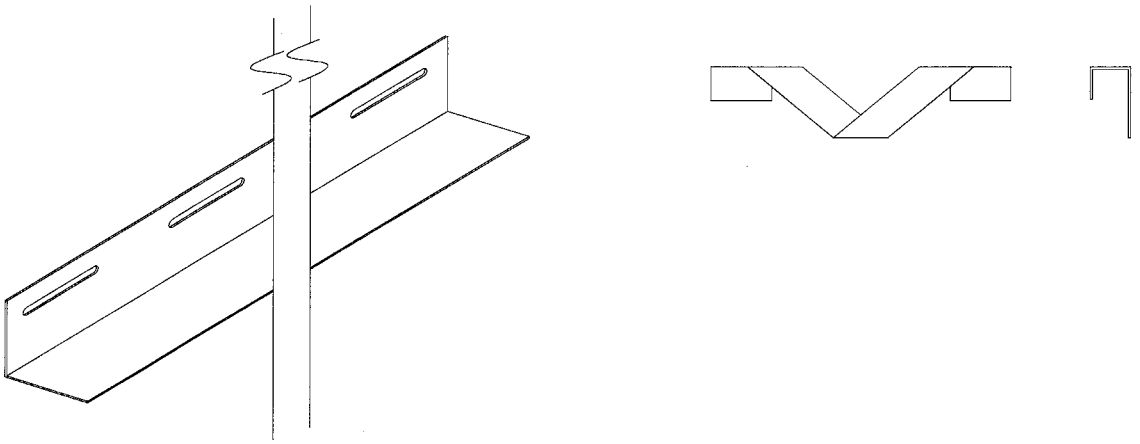

**CONTINUOUS CLIP**

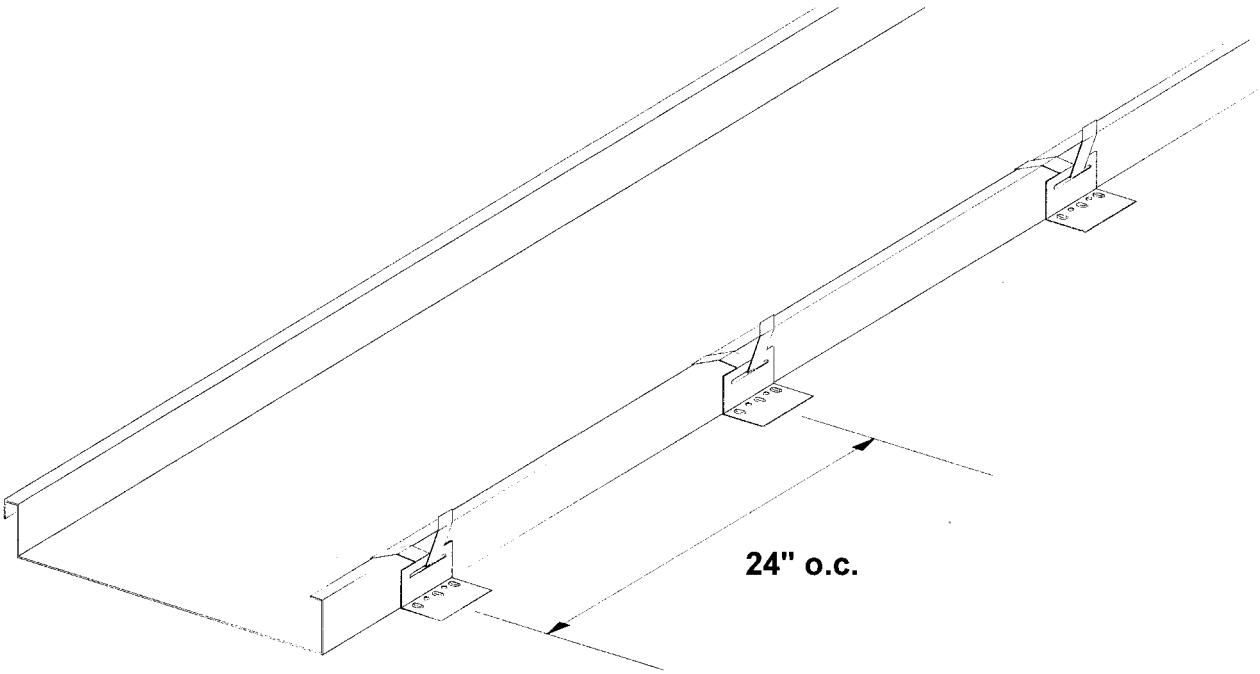


**Detail A**
**(Field Conditions)**

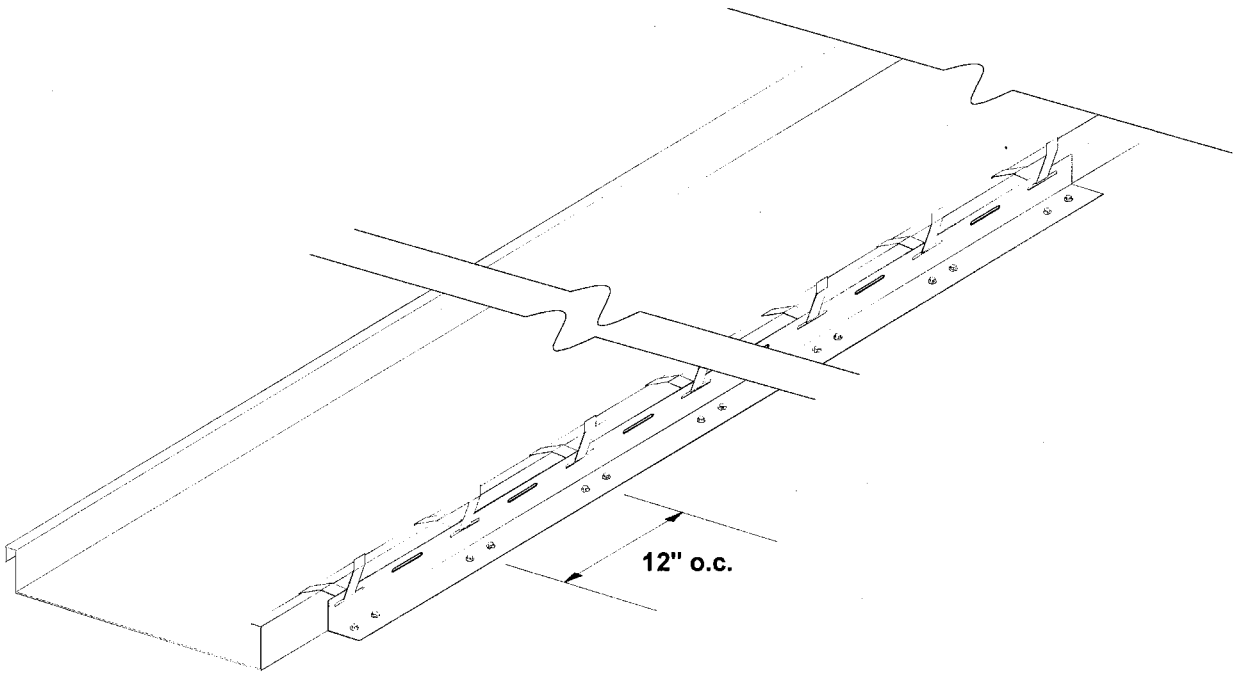


**Detail B**
**(Perimeter and Corner Conditions)**

**END OF THIS ACCEPTANCE**