MIAMI-DADE COUNTY
BUILDING CODE COMPLIANCE OFFICE (BCCO)
PRODUCT CONTROL DIVISION

MIAMI-DADE COUNTY, FLORIDA
METRO-DADE FLAGLER BUILDING

140 WEST FLAGLER STREET, SUITE 1603
MIAMI, FLORIDA 33130-1563
(305) 375-2901 FAX (305) 375-2908
www.miamidade.gov

NOTICE OF ACCEPTANCE (NOA)

WBPI
9040 Belvedere Road
West Palm Beach, Florida 33411

SCOPE:
This NOA is being issued under the applicable rules and regulations governing the use of construction materials. The documentation submitted has been reviewed by Miami-Dade County Product Control Division and accepted by the Board of Rules and Appeals (BORA) to be used in Miami Dade County and other areas where allowed by the Authority Having Jurisdiction (AHJ).

This NOA shall not be valid after the expiration date stated below. The Miami-Dade County Product Control Division (In Miami Dade County) and/or the AHJ (in areas other than Miami Dade County) reserve the right to have this product or material tested for quality assurance purposes. If this product or material fails to perform in the accepted manner, the manufacturer will incur the expense of such testing and the AHJ may immediately revoke, modify, or suspend the use of such product or material within their jurisdiction. BORA reserves the right to revoke this acceptance, if it is determined by Miami-Dade County Product Control Division that this product or material fails to meet the requirements of the applicable building code.

This product is approved as described herein, and has been designed to comply with the High Velocity Hurricane Zone of the Florida Building Code.

DESCRIPTION: " USSA / Commando Series 2" Aluminum Accordion Shutter

APPROVAL DOCUMENT: Drawing No. 08-WBP-0003, titled " Commando Accordion Shutter - Series 2 ", sheets 1 through 7 of 7, prepared by Engineering Express, dated July 17, 2007, last revision dated February 20, 2008, signed and sealed by Frank L. Bennardo, P.E., bearing the Miami-Dade County Product Control Approval stamp with the Notice of Acceptance number and approval date by Miami-Dade County Product Control Division.

MISSILE IMPACT RATING: Large and Small Missile Impact

LABELING: Each unit shall bear a permanent label with the manufacturer's name or logo, city, state and the following statement: "Miami-Dade County Product Control Approved", unless otherwise noted herein.

RENEWAL of this NOA shall be considered after a renewal application has been filed and there has been no change in the applicable building code negatively affecting the performance of this product.

TERMINATION of this NOA will occur after the expiration date or if there has been a revision or change in the materials, use, and/or manufacture of the product or process. Misuse of this NOA as an endorsement of any product, for sales, advertising or any other purposes shall automatically terminate this NOA. Failure to comply with any section of this NOA shall be cause for termination and removal of NOA.

ADVERTISEMENT: The NOA number preceded by the words Miami-Dade County, Florida, and followed by the expiration date may be displayed in advertising literature. If any portion of the NOA is displayed, then it shall be done in its entirety.

INSPECTION: A copy of this entire NOA shall be provided to the user by the manufacturer or its distributors and shall be available for inspection at the job site at the request of the Building Official.

This NOA consists of this page 1, evidence submitted page E-1 as well as approval document mentioned above. The submitted documentation was reviewed by **Helmy A. Makar, P.E., M.S.**

MIAMI-DADE COUNTY APPROVED

Helmy A. Makar
10/02/2008

NOA No. 08-0725.02
Expiration Date: 10/02/2013
Approval Date: 10/02/2008

WBPI

NOTICE OF ACCEPTANCE: EVIDENCE SUBMITTED

A. DRAWINGS

1. *Drawing No. 08-WBP-0003, titled " Commando Accordion Shutter - Series 2 ", sheets 1 through 7 of 7, prepared by Engineering Express, dated July 17, 2007, last revision dated February 20, 2008, signed and sealed by Frank L. Bennardo, P.E.*

B. TESTS

1. *See Association's generic approval number 07-3646.*

C. CALCULATIONS

1. *See Association's generic approval number 07-3646.*

D. QUALITY ASSURANCE

1. *By Miami-Dade County Building Code Compliance Office.*

E. MATERIAL CERTIFICATIONS

1. *See Association's generic approval number 07-3646.*

F. STATEMENTS

1. *Release letter issued by the United Shutter Systems Association, Inc., dated July 22, 2008, certifying this product to meet the criteria of product tested and approved, and allowing WBPI to use the test results approved under Miami-Dade County Approval No. 07-3646, signed by Mr. Philip Moseman.*
2. *Acknowledgment letter by WBPI dated July 22, 2008, signed by Mr.* Philip *Moseman.*
3. *Letter by Engineering Express, dated July 22, 2008, certifying that the drawing (No. 08-WBP-0003) prepared for WBPI, signed and sealed by Frank L. Bennardo, P.E., is engineering wise identical to United Shutter Systems Association, generic drawing.*

Helmy A. Makar, P.E., M.S.
Product Control Examiner
NOA No. 08-0725.02
Expiration Date: 10/02/2013
Approval Date: 10/02/2008

COMMANDO ACCORDION SHUTTER - SERIES 2

FOR USE WITHIN AND OUTSIDE THE HVHZ

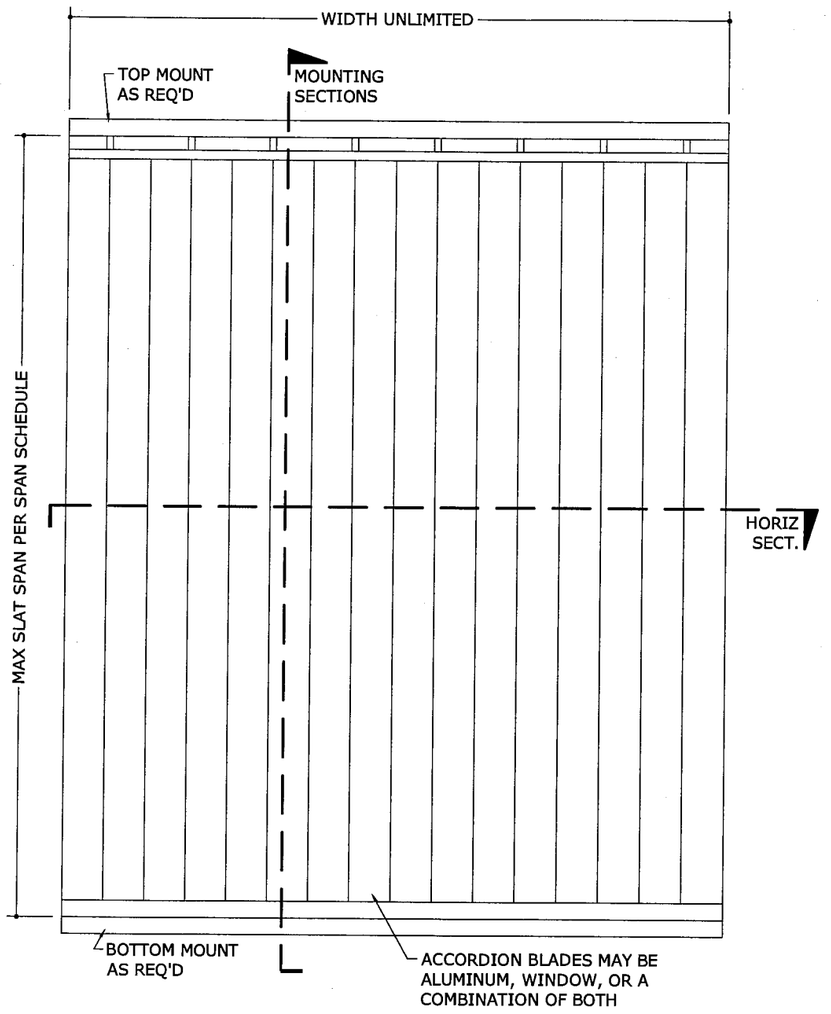

1 / 1 TYPICAL ELEVATION

N.T.S. EXTERIOR ELEV

ALLOWABLE SPAN SCHEDULE

LOAD	MAXIMUM ALLOWABLE SPAN	
	ALUMINUM BLADES ONLY	WINDOW BLADES OR ALUMINUM/ WINDOW BLADE COMBINATION
25 PSF	13'-9"	10'-0"
30 PSF	13'-9"	10'-0"
35 PSF	13'-7"	10'-0"
40 PSF	13'-1"	10'-0"
45 PSF	12'-9"	10'-0"
50 PSF	12'-5"	10'-0"
55 PSF	12'-1"	10'-0"
60 PSF	11'-10"	10'-0"
65 PSF	11'-7"	10'-0"
70 PSF	11'-5"	10'-0"
75 PSF	11'-2"	10'-0"
80 PSF	11'-0"	10'-0"
90 PSF	10'-5"	10'-0"
100 PSF	9'-10"	9'-8"
110 PSF	9'-5"	9'-2"
120 PSF	9'-0"	8'-9"
130 PSF	8'-8"	8'-5"
140 PSF	8'-2"	7'-11"
150 PSF	7'-9"	7'-4"
160 PSF	7'-3"	6'-11"
170 PSF	6'-10"	6'-6"
180 PSF	6'-5"	6'-0"
190 PSF	6'-1"	5'-6"
200 PSF	5'-10"	5'-0"

SPAN SCHEDULE NOTES:

1. SPANS SHOWN IN "ALLOWABLE SPAN SCHEDULE" ARE MAXIMUM ALLOWABLE SPANS AT EACH RESPECTIVE DESIGN PRESSURE.
2. MAXIMUM SPAN FOR INSTALLATIONS WITH PUSH BUTTON TYPE CENTERMATE IS 10'-0".
3. MAXIMUM SPAN FOR INSTALLATIONS WITH T-HANDLE TYPE CENTERMATE IS 13'-9".

MINIMUM GLASS SEPARATION

POSITIVE LOAD	ALUMINUM BLADES ONLY			WINDOW BLADES OR ALUMINUM/ WINDOW BLADE COMBINATION		
	SPAN LESS THAN:	INSTALLATIONS 30' ABOVE GRADE OR LESS	INSTALLATIONS MORE THAN 30' ABOVE GRADE	SPAN LESS THAN:	INSTALLATIONS 30' ABOVE GRADE OR LESS	INSTALLATIONS MORE THAN 30' ABOVE GRADE
30 PSF	5'-9"	2.50"	1.04"	5'-9"	2.25"	1.05"
	8'-5"	2.50"	1.20"	8'-5"	2.25"	1.22"
	13'-9"	3.25"	2.44"	10'-0"	3.50"	1.44"
40 PSF	5'-9"	2.50"	1.06"	5'-9"	2.25"	1.06"
	8'-5"	2.50"	1.27"	8'-5"	2.25"	1.29"
	13'-1"	3.25"	2.60"	10'-0"	3.50"	1.58"
50 PSF	5'-9"	2.50"	1.07"	5'-9"	2.25"	1.08"
	8'-5"	2.50"	1.34"	8'-5"	2.25"	1.37"
	12'-5"	3.25"	2.60"	10'-0"	3.50"	1.73"
60 PSF	5'-9"	2.50"	1.09"	5'-9"	2.25"	1.10"
	8'-5"	2.50"	1.40"	8'-5"	2.25"	1.44"
	11'-10"	2.88"	2.60"	10'-0"	3.50"	1.87"
70 PSF	5'-9"	2.50"	1.10"	5'-9"	2.25"	1.11"
	8'-5"	2.50"	1.47"	8'-5"	2.25"	1.51"
	11'-5"	2.88"	2.60"	10'-0"	3.50"	2.02"
80 PSF	5'-9"	2.50"	1.12"	5'-9"	2.25"	1.13"
	8'-5"	2.50"	1.54"	8'-5"	2.25"	1.58"
	11'-0"	2.88"	2.60"	10'-0"	3.50"	2.16"
90 PSF	5'-9"	2.50"	1.13"	5'-9"	2.25"	1.14"
	8'-5"	2.50"	1.61"	8'-5"	2.25"	1.66"
	10'-5"	2.88"	2.44"	10'-0"	3.50"	2.31"
100 PSF	5'-9"	2.50"	1.15"	5'-9"	2.25"	1.16"
	8'-5"	2.50"	1.67"	8'-5"	2.25"	1.73"
	9'-10"	2.88"	2.29"	9'-8"	3.50"	2.27"
150 PSF	5'-9"	2.50"	1.22"	5'-9"	2.25"	1.24"
	7'-9"	2.50"	1.74"	7'-4"	2.25"	1.66"
200 PSF	5'-9"	2.50"	1.29"	5'-6"	2.25"	1.28"
	5'-10"	2.50"	1.31"			

GENERAL NOTES

1. THE SYSTEM DESCRIBED HEREIN HAS BEEN DESIGNED AND TESTED IN ACCORDANCE WITH THE 2004 FLORIDA BUILDING CODE, FOR USE WITHIN AND OUTSIDE THE HIGH VELOCITY HURRICANE ZONE, PER TAS 201 / 202 / 203.
2. NO 33-1/3% INCREASE IN ALLOWABLE STRESS HAS BEEN USED IN THE DESIGN OF THIS SYSTEM. WIND LOAD DURATION FACTOR Cd=1.6 HAS BEEN USED FOR WOOD ANCHOR DESIGN.
3. POSITIVE AND NEGATIVE DESIGN PRESSURES CALCULATED FOR USE WITH THIS SYSTEM SHALL BE DETERMINED BY OTHERS ON A JOB-SPECIFIC BASIS IN ACCORDANCE WITH THE GOVERNING CODE.
4. ALL POLYCARBONATE PANELS SHALL BE EXTRUDED WITH THICKNESS t=0.090" (±0.010") AND SHALL BE FABRICATED FROM 100% G.E. SYNTHETIC THERMOPLASTIC POLYMER LEXAN SHEET #9034 (UV STABILIZED) OR EQUIVALENT, AS APPROVED UNDER MIAMI-DADE COUNTY NOTICE OF ACCEPTANCE #03-1210.04. MINIMUM SYNTHETIC THERMOPLASTIC POLYMER TENSILE STRENGTH Fy=8.908 KSI, FLEXURAL STRENGTH Fby=12.90 KSI, & FLEXURAL MODULUS IS 328.7 KSI.
5. THE SYSTEM DETAILED HEREIN IS GENERIC AND DOES NOT PROVIDE INFORMATION FOR A SPECIFIC SITE. FOR SITE CONDITIONS DIFFERENT FROM THE CONDITIONS DETAILED HEREIN, A LICENSED ENGINEER OR REGISTERED ARCHITECT SHALL PREPARE SITE SPECIFIC DOCUMENTS FOR USE IN CONJUNCTION WITH THIS DOCUMENT.
6. PERMIT HOLDER SHALL VERIFY THE ADEQUACY OF THE EXISTING STRUCTURE TO WITHSTAND SUPERIMPOSED LOADS. WOOD BUCKS (BY OTHERS) SHALL BE ANCHORED PROPERLY TO TRANSFER LOADS TO THE EXISTING STRUCTURE.
7. ALL EXTRUSIONS SHALL BE 6063-T6 ALUMINUM ALLOY, UNLESS NOTED OTHERWISE.
8. EACH SHUTTER ASSEMBLY SHALL BE PERMANENTLY LABELED AS FOLLOWS:
   UNITED SHUTTER SYSTEMS ASSOCIATION
   MIAMI-DADE PRODUCT CONTROL APPROVED
9. TOP & BOTTOM DETAILS SHOWN MAY BE INTERCHANGED AS FIELD CONDITIONS DICTATE.
10. ALL BOLTS & WASHERS SHALL BE ZINC COATED STEEL, GALVANIZED STEEL, OR STAINLESS STEEL WITH A MINIMUM TENSILE YIELD STRENGTH OF 60 KSI. ALL 3/16"Ø OR 1/4"Ø POP RIVETS SHALL BE 5056-H32 ALUMINUM ALLOY OR STRONGER.
11. ALL STEEL IN CONTACT WITH ALUMINUM SHALL BE PAINTED OR PLATED.

Approved as complying with the Florida Building Code
Date 10/02/2008
NOA# 08-0725.02
Miami Dade Product Control Division
By

FRANK L. BENNARDO, P.E.
PE0046549
07/23/2008

ENGINEERING EXPRESS®
160 SW 12th AVENUE, #106
DEERFIELD BEACH, FL 33442
PH: (954) 354-0660 FAX: (954) 354-0443
WWW.ENGEXP.COM
CERT OF AUTH #9985

WBPI
9040 BELVEDERE ROAD
WEST PALM BEACH, FL 33411
MEMBER OF THE UNITED SHUTTER SYSTEMS ASSOCIATION

COMMANDO SERIES 2 ACCORDION SHUTTERS
WITH POLYCARBONATE AND ALUMINUM BLADES
MIAMI-DADE NOTICE OF ACCEPTANCE

REMARKS	DRWN	CHKD	DATE
INIT ISSUE	KL	CL	07/17/07
REVISED PER COMMENTS	RKB	CL	02/20/08

08-WBP-0003

SCALE: - 01

PAGE DESCRIPTION:
-
-

7

1

07/23/2008 - 11:47am TroyB F:\01 Project Files\WeatherGuard (WBP)\2008 Jobs\08-WBP-0003 Commando Accordion Shutter, Series 2 (NOA)\08-WBP-0003 Commando Accordion Shutter, Series 2 (NOA).dwg

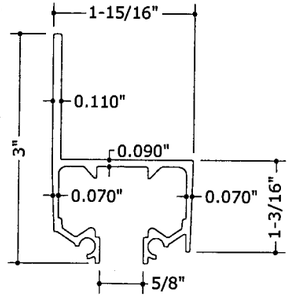

1 WALL MOUNT TRACK
N.T.S. 6063-T6

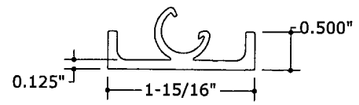

2 2" BLADE STARTER CHANNEL
N.T.S. 6063-T6

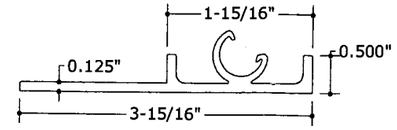

3 4" BLADE STARTER CHANNEL
N.T.S. 6063-T6

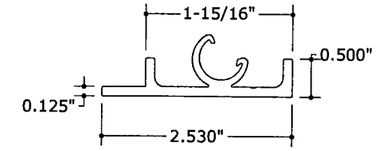

4 2-1/2" BLADE STARTER CHANNEL
N.T.S. 6063-T6

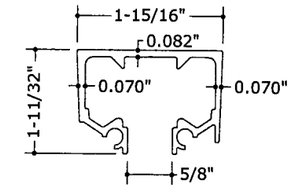

5 CEILING MOUNT HEADER
N.T.S. 6063-T6

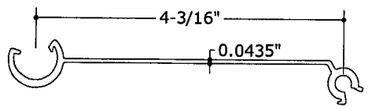

6 ALUMINUM BLADE
N.T.S. 6063-T6

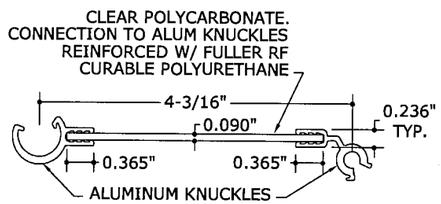

7 WINDOW BLADE
N.T.S. 6063-T6/POLYCARBONATE

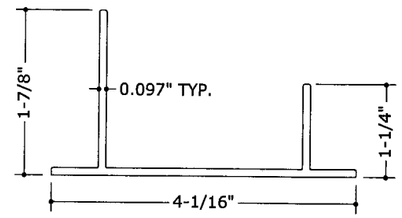

8 SILL ADAPTER
N.T.S. 6063-T6

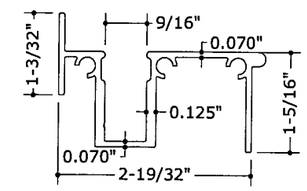

9 SILL TRACK
N.T.S. 6063-T6

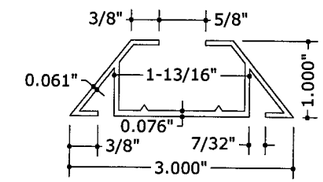

10 THRESHOLD TRACK
N.T.S. 6063-T6

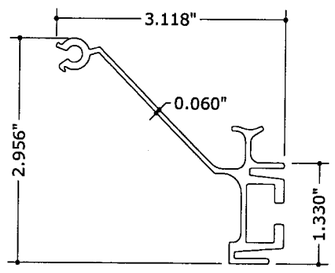

11 FEMALE CENTERMATE
N.T.S. 6063-T5

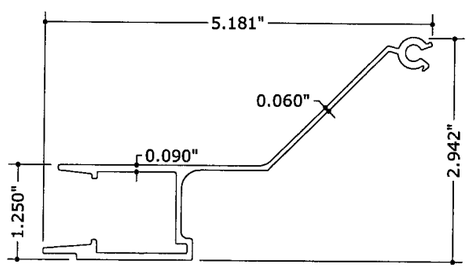

12 MALE CENTERMATE
N.T.S. 6063-T5

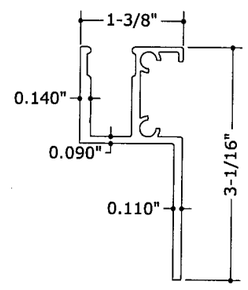

13 WALL SILL
N.T.S. 6063-T6

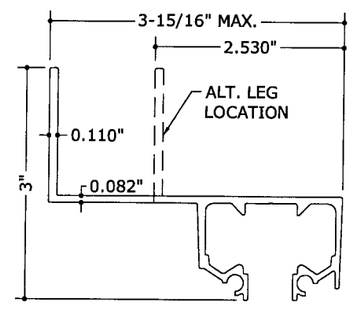

14 BUILD OUT TRACK
N.T.S. 6063-T6

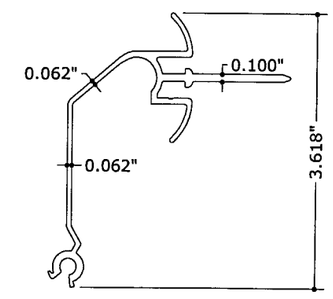

15 CORNER CENTERMATE
N.T.S. 6063-T5

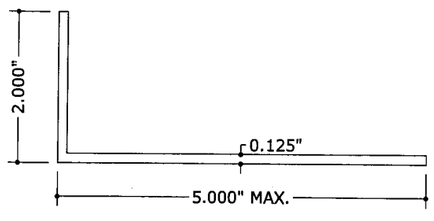

16 BUILD-OUT ANGLE
N.T.S. 6063-T6

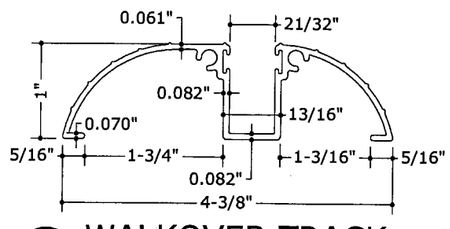

17 WALKOVER TRACK
N.T.S. 6063-T6

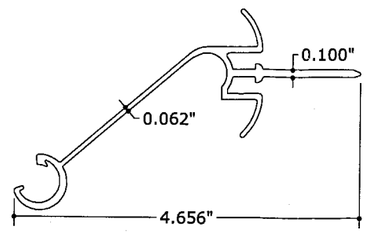

18 PUSH BUTTON CENTERMATE
N.T.S. 6063-T5

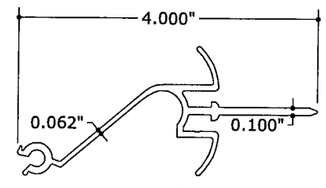

19 FLOATING CENTERMATE
N.T.S. 6063-T5

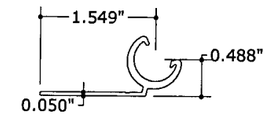

20 STARTER BLADE
N.T.S. 6063-T6

Approved as complying with the Florida Building Code
Date 10/02/2008
NOA# 08-0725.02
Miami Dade Product Control Division
By Helen A. Mele

FRANK L. BENNARDO, P.E.
PE0046549
07/23/2008

ENGINEERING EXPRESS®
160 SW 12th AVENUE, #106
DEERFIELD BEACH, FL 33442
PH: (954) 354-0660 FAX: (954) 354-0443
WWW.ENGEXP.COM
CERT OF AUTH #9885

WBPI
9040 BELVEDERE ROAD
WEST PALM BEACH, FL 33411
MEMBER OF THE UNITED SHUTTER SYSTEMS ASSOCIATION

COMMANDO SERIES 2 ACCORDION SHUTTERS
WITH POLYCARBONATE AND ALUMINUM BLADES
MIAMI-DADE NOTICE OF ACCEPTANCE

REMARKS	DRWN	CHKD	DATE
INIT ISSUE	KL	CL	07/17/07
REVISED PER COMMENTS	RKB	CL	02/20/08

08-WBP-0003
SCALE: - 01
PAGE DESCRIPTION:
-
-

7

2

F:\01 Project Files\WeatherGuard (WBP)\2008 Jobs\08-WBP-0003 Commando Accordion Shutter, Series 2 (NOA)\08-WBP-0003 Commando Accordion Shutter, Series 2 (NOA).dwg
07/23/2008 - 11:47am TroyB

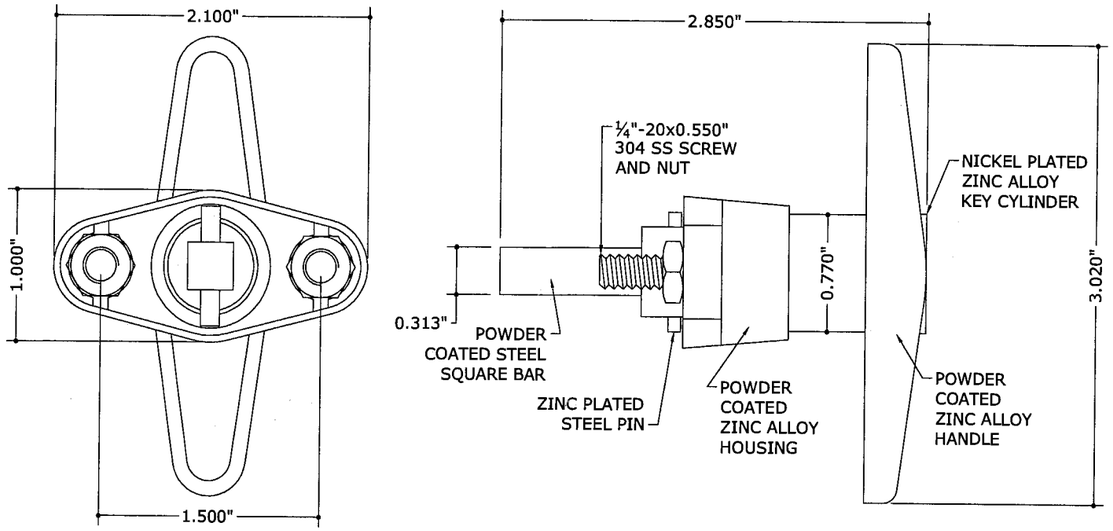

21 T-HANDLE
N.T.S. MAT'L AS INDICATED

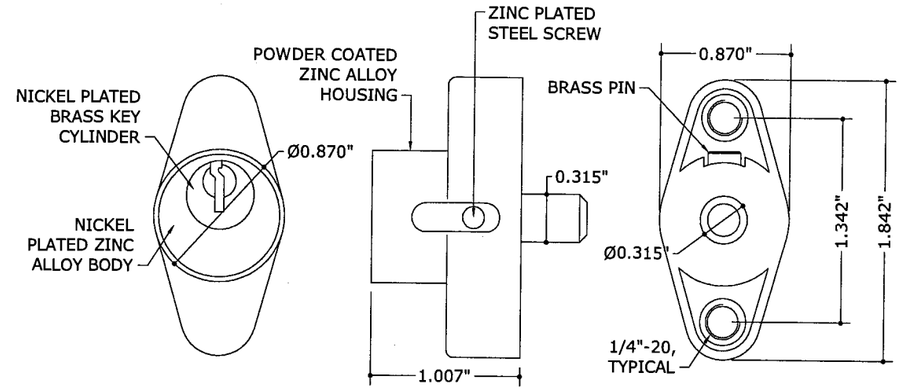

24 KEY OPERATED PUSH-BUTTON LOCK
N.T.S. MAT'L AS INDICATED

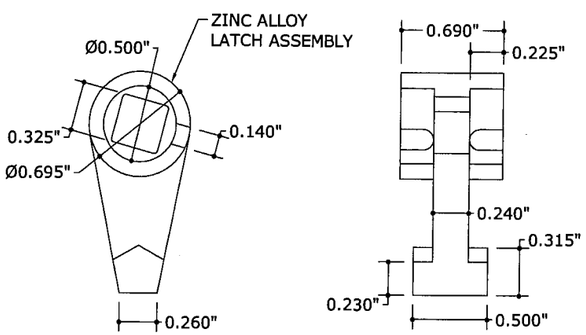

22 T-HANDLE LATCH
N.T.S. ZINC ALLOY

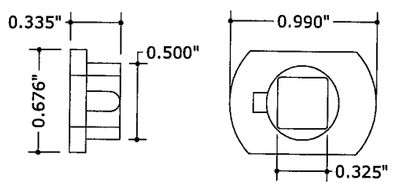

23 T-HANDLE BUSHING
N.T.S. NYLON

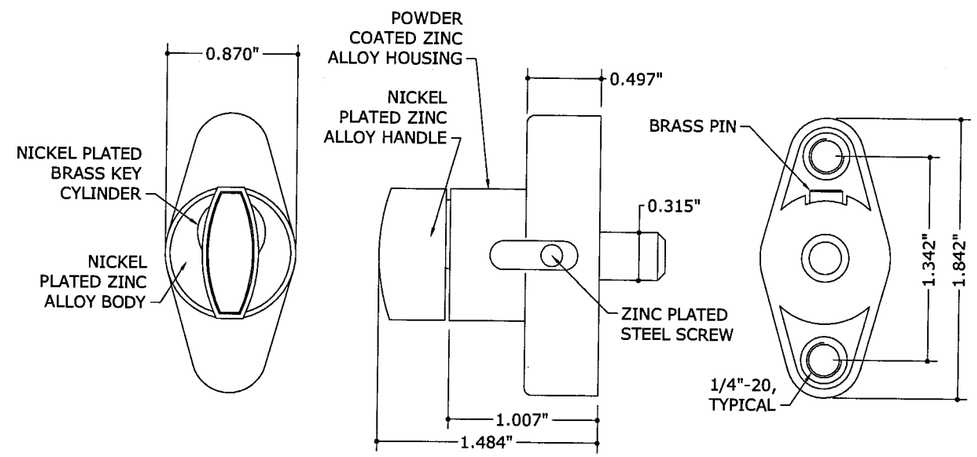

25 HANDLE OPERATED PUSH-BUTTON LOCK
N.T.S. MAT'L AS INDICATED

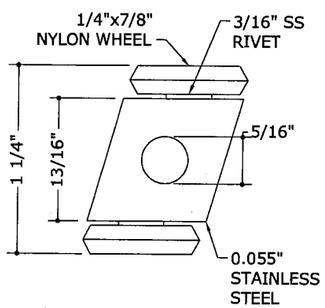

26 WHEEL CARRIAGE
N.T.S. MAT'L AS INDICATED

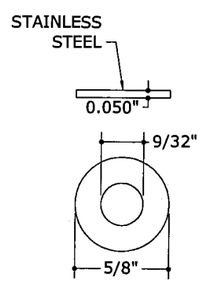

27 WASHER
N.T.S. MAT'L AS INDICATED

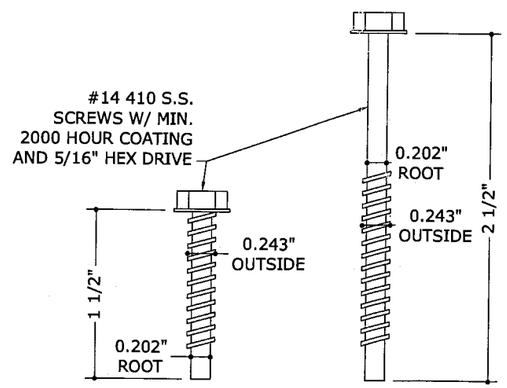

28 KNUCKLE SCREWS
N.T.S. 410 SS

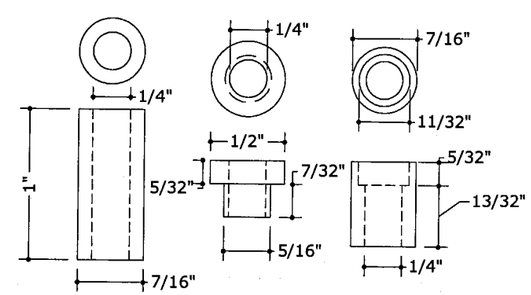

29 NYLON BUSHINGS
N.T.S. UV66 WHITE NYLON

Approved as complying with the Florida Building Code
Date 10/02/2008
NOA# 08-0725.02
Miami Dade Product Control Division
By

FRANK L. BENNARDO, P.E.
PE0046549
07/23/2008

ENGINEERING EXPRESS®
160 SW 12th AVENUE, #106
DEERFIELD BEACH, FL 33442
PH: (954) 354-0660 FAX: (954) 354-0443
WWW.ENGEXP.COM
CERT OF AUTH #9885

WBPI
9040 BELVEDERE ROAD
WEST PALM BEACH, FL 33411
MEMBER OF THE UNITED SHUTTER SYSTEMS ASSOCIATION

COMMANDO SERIES 2 ACCORDION SHUTTERS
WITH POLYCARBONATE AND ALUMINUM BLADES
MIAMI-DADE NOTICE OF ACCEPTANCE

REMARKS	DRWN	CHKD	DATE
INIT ISSUE	KL	CL	07/17/07
REVISED PER COMMENTS	RKB	CL	02/20/08

08-WBP-0003
SCALE: - 01
PAGE DESCRIPTION:
-
-
7
3

F:\01 Project Files\WeatherGuard (WBP)\2008 Jobs\08-WBP-0003 Commando Accordion Shutter, Series 2 (NOA)\08-WBP-0003 Commando Accordion Shutter, Series 2 (NOA).dwg
07/23/2008 - 11:47am TroyB

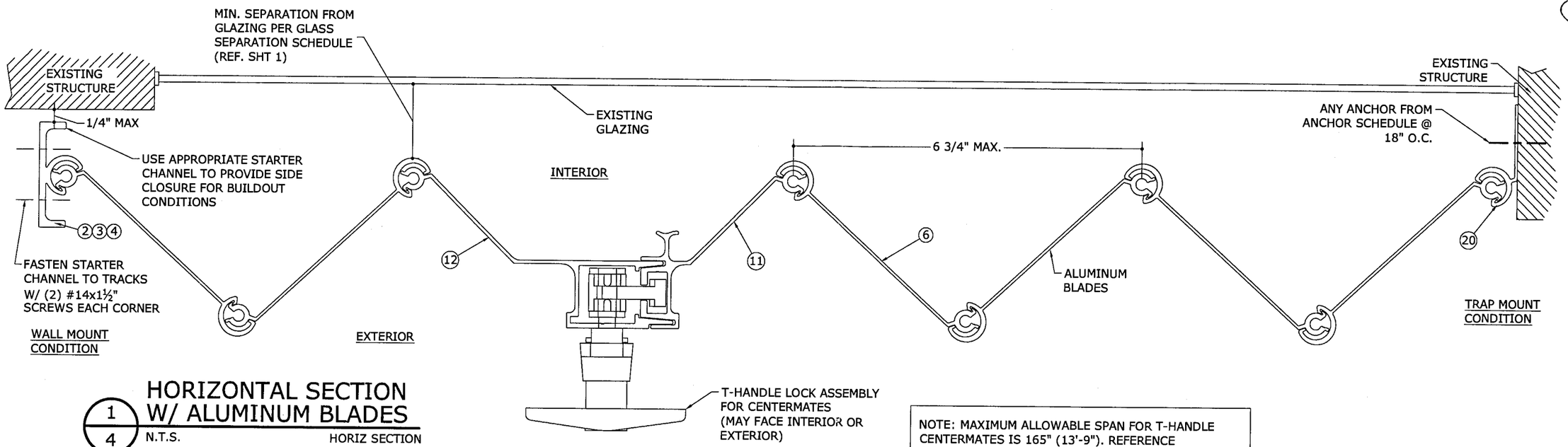

NOTE: MAXIMUM ALLOWABLE SPAN FOR T-HANDLE CENTERMATES IS 165" (13'-9"). REFERENCE ALLOWABLE SPAN SCHEDULE AND NOTES ON SHEET 1.

1/4 HORIZONTAL SECTION W/ ALUMINUM BLADES

N.T.S. HORIZ SECTION

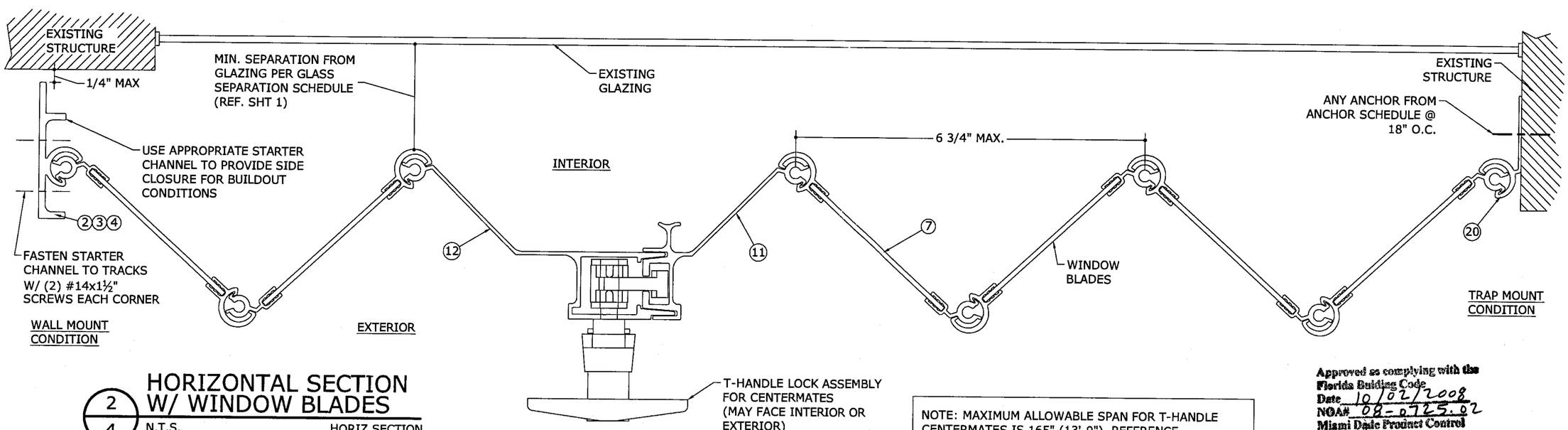

NOTE: MAXIMUM ALLOWABLE SPAN FOR T-HANDLE CENTERMATES IS 165" (13'-9"). REFERENCE ALLOWABLE SPAN SCHEDULE AND NOTES ON SHEET 1.

2/4 HORIZONTAL SECTION W/ WINDOW BLADES

N.T.S. HORIZ SECTION

Approved as complying with the Florida Building Code
Date 10/02/2008
NOA# 08-0725.02
Miami Dade Product Control Division
By

FRANK L. BENNARDO, P.E.
PE0046549
07/23/2008

ENGINEERING EXPRESS®
160 SW 12th AVENUE, #106
DEERFIELD BEACH, FL 33442
PH: (954) 354-0660 FAX: (954) 354-0443
WWW.ENGEXP.COM
CERT OF AUTH #9885

WBPI
9040 BELVEDERE ROAD
WEST PALM BEACH, FL 33411
MEMBER OF THE UNITED SHUTTER SYSTEMS ASSOCIATION

COMMANDO SERIES 2 ACCORDION SHUTTERS
WITH POLYCARBONATE AND ALUMINUM BLADES
MIAMI-DADE NOTICE OF ACCEPTANCE

REMARKS	DRWN	CHKD	DATE
INIT ISSUE	KL	CL	07/17/07
REVISED PER COMMENTS	RKB	CL	02/20/08

08-WBP-0003
SCALE: - 01
PAGE DESCRIPTION:
-
-

7

4

07/23/2008 - 11:47am TroyB F:\01 Project Files\WeatherGuard (WBP)\2008 Jobs\08-WBP-0003 Commando Accordion Shutter, Series 2 (NOA)\08-WBP-0003 Commando Accordion Shutter, Series 2 (NOA).dwg

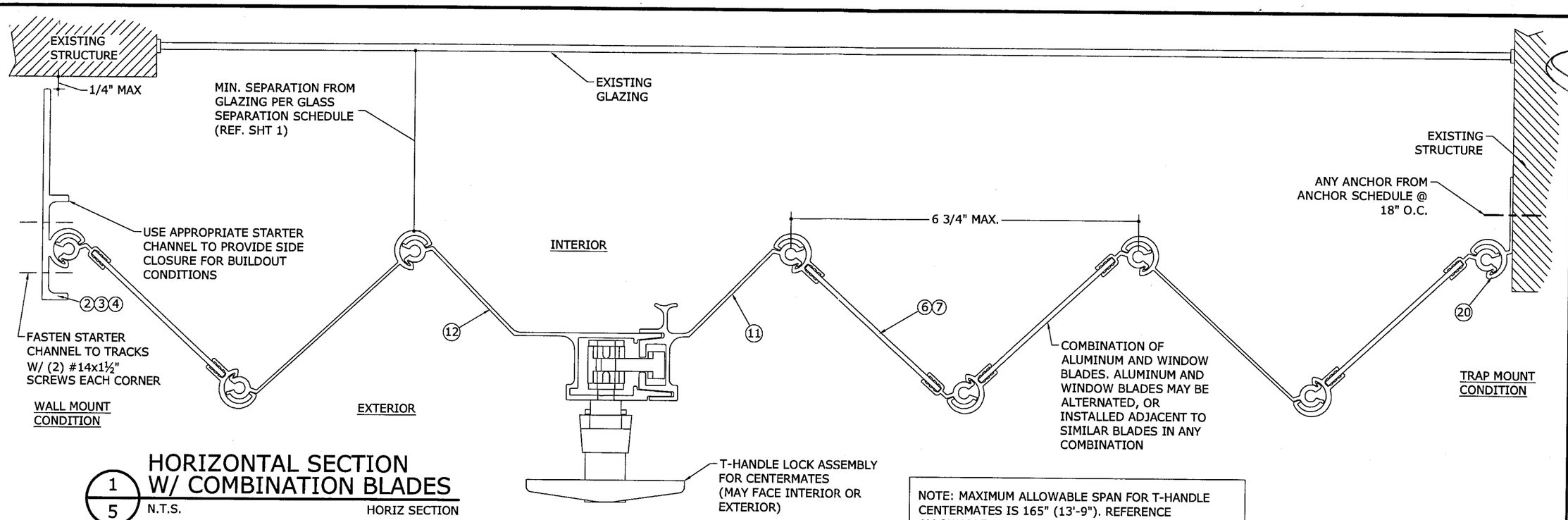

NOTE: MAXIMUM ALLOWABLE SPAN FOR T-HANDLE CENTERMATES IS 165" (13'-9"). REFERENCE ALLOWABLE SPAN SCHEDULE AND NOTES ON SHEET 1.

1/5 HORIZONTAL SECTION W/ COMBINATION BLADES

N.T.S. HORIZ SECTION

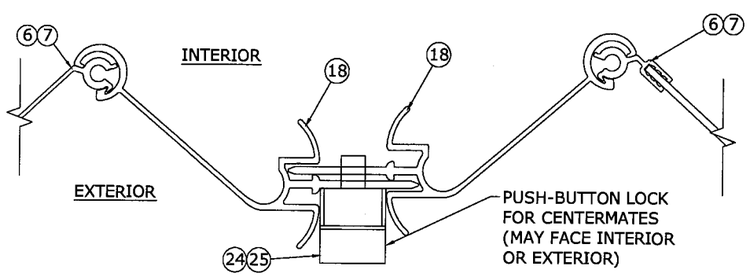

NOTE: MAXIMUM ALLOWABLE SPAN FOR PUSH-BUTTON CENTERMATES IS 120" (10'-0"). REFERENCE ALLOWABLE SPAN SCHEDULE AND NOTES ON SHEET 1.

2/5 ALT. PUSH-BUTTON CENTERMATE

N.T.S. HORIZ SECTION

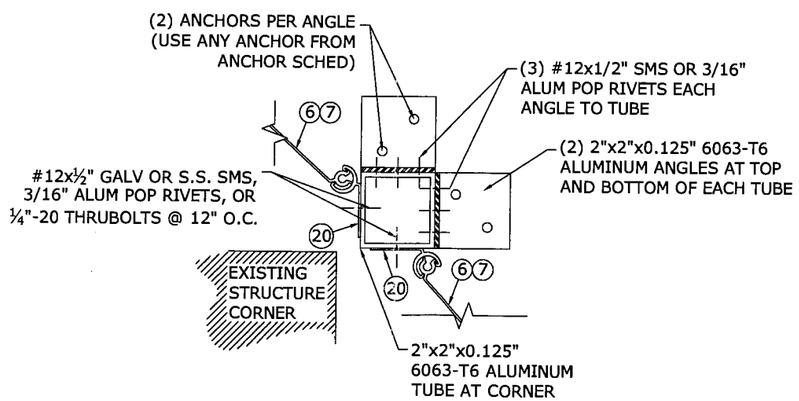

3/5 STANDARD CORNER CLOSURE

N.T.S. HORIZ SECTION

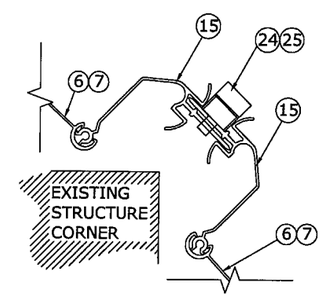

4/5 PUSH-BUTTON CORNER CLOSURE

N.T.S. HORIZ SECTION

Approved as complying with the Florida Building Code
Date 10/02/2008
NOA# 08-0725.02
Miami Dade Product Control Division
By Helmy A. Mel

FRANK L. BENNARDO, P.E.
PE0046549
07/23/2008

ENGINEERING EXPRESS®
160 SW 12th AVENUE, #106
DEERFIELD BEACH, FL 33442
PH: (954) 354-0660 FAX: (954) 354-0443
WWW.ENGEXP.COM
CERT OF AUTH #9885

WBPI
9040 BELVEDERE ROAD
WEST PALM BEACH, FL 33411
MEMBER OF THE UNITED SHUTTER SYSTEMS ASSOCIATION

COMMANDO SERIES 2 ACCORDION SHUTTERS WITH POLYCARBONATE AND ALUMINUM BLADES
MIAMI-DADE NOTICE OF ACCEPTANCE

REMARKS	DRWN	CHKD	DATE
INIT ISSUE	KL	CL	07/17/07
REVISED PER COMMENTS	RKB	CL	02/20/08

08-WBP-0003
SCALE: - 01
PAGE DESCRIPTION:
-
-

7

5

07/23/2008 - 11:47am TroyB F:\01 Project Files\WeatherGuard (WBP)\2008 Jobs\08-WBP-0003 Commando Accordion Shutter, Series 2 (NOA)\08-WBP-0003 Commando Accordion Shutter, Series 2 (NOA).dwg

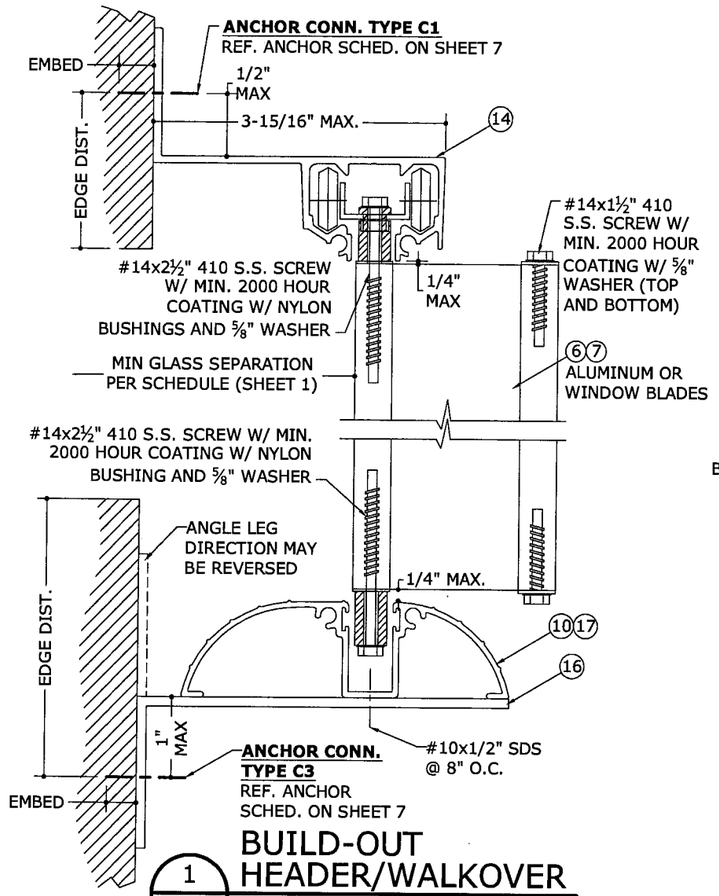

1 / 6 BUILD-OUT HEADER/WALKOVER

N.T.S. VERT SECTION

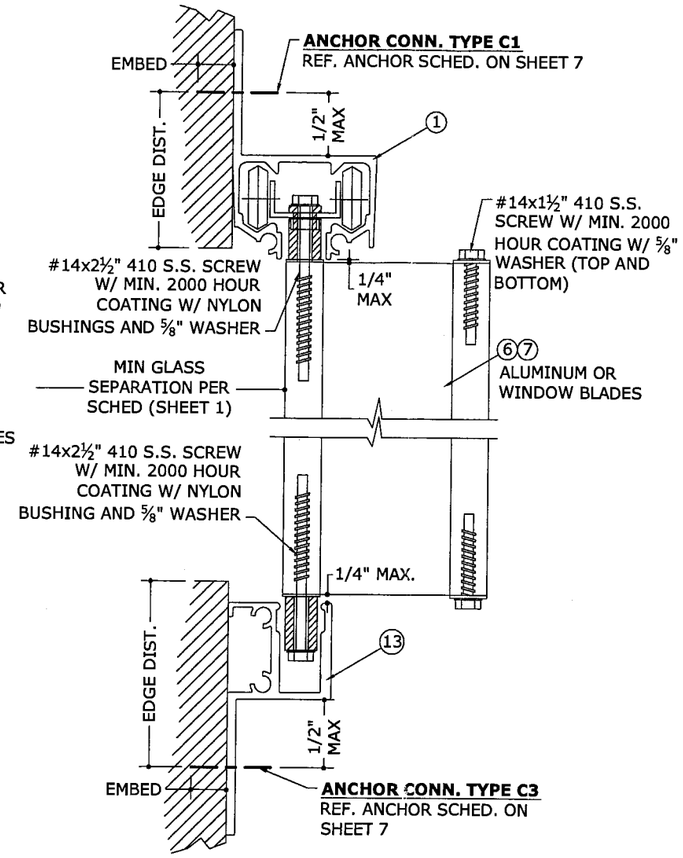

2 / 6 WALL MOUNT HEADER/SILL TRACK

N.T.S. VERT SECTION

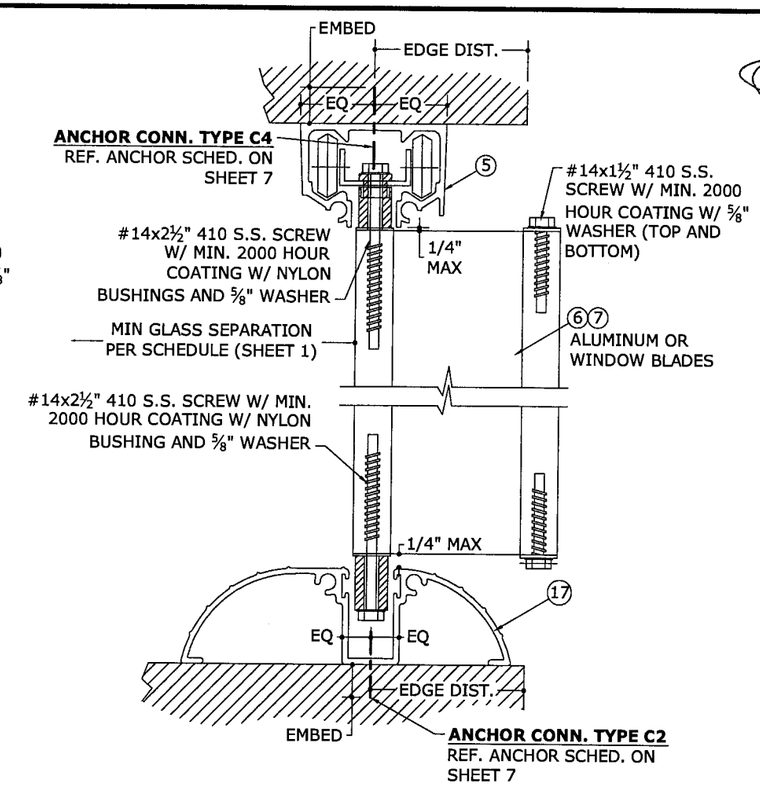

3 / 6 CEILING/FLOOR HEADER/WALKOVER*

N.T.S. VERT SECTION

*NOTE: MAX DESIGN PRESSURE FOR MOUNTING CONDITION 3/6 IS 138.0 PSF WITH 72" MAX SHUTTER SPAN.

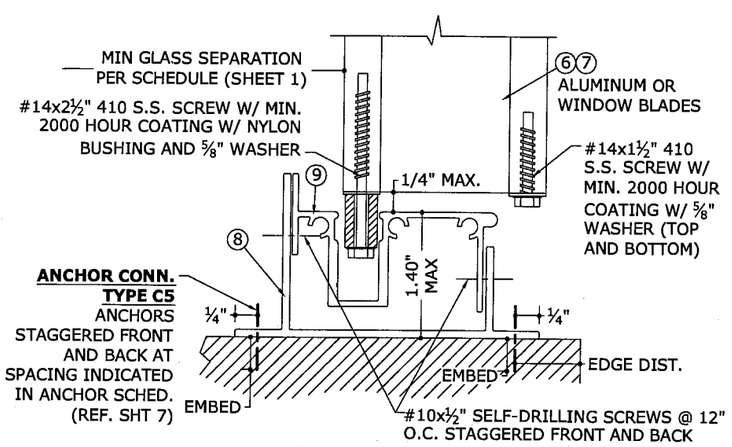

4 / 6 FLOOR SILL TRACK

N.T.S. VERT SECTION

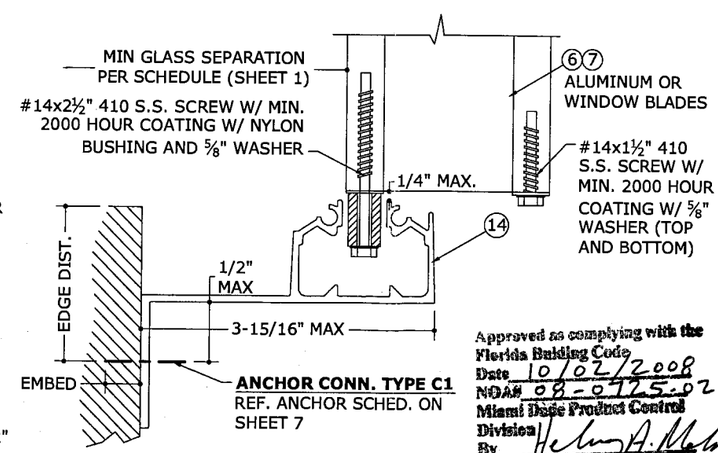

Approved as complying with the Florida Building Code
Date 10/02/2008
NOA# 08-0725.02
Miami Dade Product Control Division
By

5 / 6 BUILD-OUT SILL TRACK

N.T.S. VERT SECTION

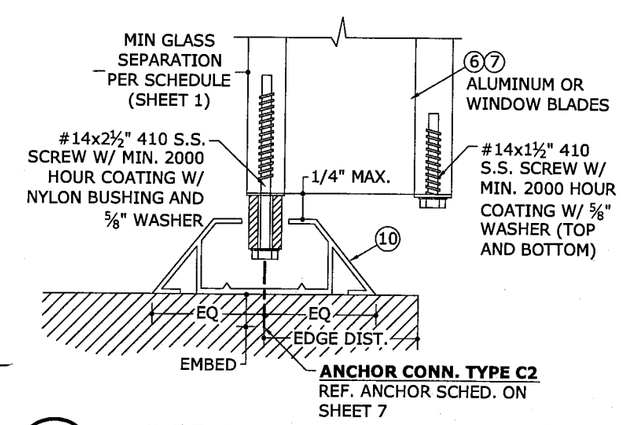

6 / 6 FLOOR THRESHOLD TRACK

N.T.S. VERT SECTION

FRANK L. BENNARDO, P.E.
PE0046549
07/23/2008

ENGINEERING EXPRESS®
160 SW 12th AVENUE, #106
DEERFIELD BEACH, FL 33442
PH: (954) 354-0660 FAX: (954) 354-0443
WWW.ENGEXP.COM
CERT OF AUTH #9885

WBPI
9040 BELVEDERE ROAD
WEST PALM BEACH, FL 33411
MEMBER OF THE UNITED SHUTTER SYSTEMS ASSOCIATION

COMMANDO SERIES 2 ACCORDION SHUTTERS WITH POLYCARBONATE AND ALUMINUM BLADES
MIAMI-DADE NOTICE OF ACCEPTANCE

REMARKS	DRWN	CHKD	DATE
INIT ISSUE	KL	CL	07/17/07
REVISED PER COMMENTS	RKB	CL	02/20/08

08-WBP-0003

SCALE: - 01

PAGE DESCRIPTION:
-
-

7

6

07/23/2008 - 11:48am TroyB F:\01 Project Files\WeatherGuard (WBP)\2008 Jobs\08-WBP-0003 Commando Accordion Shutter, Series 2 (NOA)\08-WBP-0003 Commando Accordion Shutter, Series 2 (NOA).dwg

ANCHORS TO CONCRETE/HOLLOW BLOCK W/ 3" EDGE DISTANCE

HOST STRUCT.	ANCHOR	LOAD (psf)	3" MIN EDGE DISTANCE														
			Spans Up To 5'-6" CONN TYPE					Spans Up To 9'-0" CONN TYPE					Spans Up To 13'-9" CONN TYPE				
			C1	C2	C3	C4	C5	C1	C2	C3	C4	C5	C1	C2	C3	C4	C5
CONCRETE/HOLLOW BLOCK	1/4"x2-1/4" MASONRY SCREW (U.S.S.A.) WITH 1-1/4" EMBED (1844psi MIN BLOCK)	47	12.0"	12.0"	12.0"	12.0"	12.0"	12.0"	9.4"	11.7"	8.8"	10.8"	7.2"	5.9"	6.0"	5.3"	6.8"
		60	12.0"	12.0"	12.0"	12.0"	12.0"	9.3"	7.2"	7.8"	6.5"	8.3"	5.3"	4.6"	4.3"	4.0"	5.2"
		72	12.0"	10.1"	12.0"	9.5"	11.7"	7.2"	5.9"	6.0"	5.2"	6.8"	4.2"	3.8"	3.4"	3.3"	4.3"
		120	7.0"	5.8"	5.8"	5.1"	6.6"	3.8"	3.5"	3.1"	3.0"	3.9"	3.5"	3.2"			3.6"
		200	3.7"	3.4"	3.0"		3.9"	3.5"	3.2"			3.6"	3.5"	3.2"			3.6"
	1/4"-20 LEAD SHIELD (U.S.S.A.) W/ 7/8" MIN EMBED (1844psi MIN BLOCK) *	47	12.0"	12.0"	12.0"	12.0"	12.0"	12.0"	10.5"	12.0"	9.8"	12.0"	8.0"	6.7"	6.6"	5.9"	7.6"
		60	12.0"	12.0"	12.0"	12.0"	12.0"	10.3"	8.1"	8.6"	7.3"	9.3"	5.9"	5.1"	4.8"	4.5"	5.9"
		72	12.0"	11.3"	12.0"	10.7"	12.0"	8.0"	6.6"	6.6"	5.9"	7.6"	4.7"	4.3"	3.8"	3.6"	4.8"
		120	7.8"	6.5"	6.4"	5.7"	7.5"	4.2"	3.9"	3.4"	3.3"	4.4"	3.9"	3.6"	3.1"	3.0"	4.1"
		200	4.1"	3.8"	3.3"	3.2"	4.3"	3.9"	3.6"	3.1"	3.0"	4.1"	3.9"	3.6"	3.1"	3.0"	4.1"
	1/4" CARBON STEEL TAPCON (ITW) W/ 1-1/4" MIN EMBED	47	12.0"	8.9"	12.0"	9.3"	10.4"	7.2"	5.1"	6.3"	4.7"	5.8"	3.9"	3.2"	3.2"		3.7"
		60	11.2"	6.7"	10.3"	6.5"	7.8"	5.0"	3.9"	4.2"	3.5"	4.5"					
		72	8.0"	5.5"	7.1"	5.1"	3.6"	3.9"	3.2"	3.2"		3.7"					
		120	3.8"	3.1"	3.1"												
		200															
	1/4"-20 CALK-IN (POWERS) W/ 7/8" MIN EMBED *	47	12.0"	10.2"	12.0"	10.7"	12.0"	8.1"	5.8"	7.1"	5.4"	6.7"	4.4"	3.7"	3.6"	3.2"	4.2"
		60	12.0"	7.7"	11.6"	7.5"	8.9"	5.6"	4.5"	4.7"	4.0"	5.1"	3.2"	2.8"	2.6"	2.5"	3.2"
		72	9.1"	6.3"	8.0"	5.9"	7.2"	4.4"	3.7"	3.6"	3.2"	4.2"	2.6"				2.7"
		120	4.3"	3.6"	3.5"	3.2"	4.1"					2.4"					
		200										2.2"					

ANCHORS TO CONCRETE/HOLLOW BLOCK W/ 2.5" EDGE DISTANCE

HOST STRUCT.	ANCHOR	LOAD (psf)	2.5" MIN EDGE DISTANCE														
			Spans Up To 5'-6" CONN TYPE					Spans Up To 9'-0" CONN TYPE					Spans Up To 13'-9" CONN TYPE				
			C1	C2	C3	C4	C5	C1	C2	C3	C4	C5	C1	C2	C3	C4	C5
CONCRETE/HOLLOW BLOCK	1/4"x2-1/4" MASONRY SCREW (U.S.S.A.) WITH 1-1/4" EMBED (1844psi MIN BLOCK)	47	12.0"	12.0"	12.0"	12.0"	12.0"	12.0"	8.8"	11.3"	8.2"	10.0"	7.0"	5.6"	5.8"	4.9"	6.3"
		60	12.0"	11.6"	12.0"	11.3"	12.0"	9.0"	6.7"	7.6"	6.1"	7.7"	5.1"	4.3"	4.2"	3.7"	4.9"
		72	12.0"	9.4"	12.0"	8.9"	10.8"	7.0"	5.5"	5.8"	4.9"	6.3"	4.1"	3.5"	3.3"	3.1"	4.0"
		120	6.8"	5.4"	5.7"	4.8"	6.2"	3.7"	3.2"	3.0"		3.7"	3.4"	3.0"			3.4"
		200	3.6"	3.2"			3.6"	3.4"	3.0"			3.4"	3.4"	3.0"			3.4"
	1/4"-20 LEAD SHIELD (U.S.S.A.) W/ 7/8" MIN EMBED (1844psi MIN BLOCK) *	47	12.0"	12.0"	12.0"	12.0"	12.0"	12.0"	8.5"	11.3"	7.9"	9.6"	7.0"	5.4"	5.8"	4.8"	6.1"
		60	12.0"	11.1"	12.0"	10.9"	12.0"	9.0"	6.5"	7.6"	5.9"	7.4"	5.1"	4.1"	4.2"	3.6"	4.7"
		72	12.0"	9.1"	12.0"	8.6"	10.4"	7.0"	5.3"	5.8"	4.8"	6.1"	4.1"	3.4"	3.3"	3.0"	3.9"
		120	6.8"	5.2"	5.6"	4.7"	5.9"	3.7"	3.1"	3.0"	2.7"	3.5"	3.4"				3.3"
		200	3.6"	3.1"			3.5"	3.4"				3.3"	3.4"				3.3"
	1/4" CARBON STEEL TAPCON (ITW) W/ 1-1/4" MIN EMBED	47	12.0"	8.9"	12.0"	9.3"	10.4"	7.2"	5.1"	6.3"	4.7"	5.8"	3.9"	3.2"	3.2"		3.7"
		60	11.2"	6.7"	10.3"	6.5"	7.8"	5.0"	3.9"	4.2"	3.5"	4.5"					
		72	8.0"	5.5"	7.1"	5.1"	6.3"	3.9"	3.2"	3.2"		3.7"					
		120	3.8"	3.1"	3.1"		3.6"										
		200															
	1/4"-20 CALK-IN (POWERS) W/ 7/8" MIN EMBED *	47	12.0"	8.6"	12.0"	9.0"	9.9"	7.3"	4.9"	6.4"	4.6"	5.6"	3.9"	3.1"	3.3"	2.8"	3.5"
		60	11.3"	6.5"	10.5"	6.3"	7.4"	5.1"	3.8"	4.3"	3.4"	4.3"	2.9"				2.7"
		72	8.1"	5.3"	7.2"	5.0"	6.0"	3.9"	3.1"	3.3"	2.8"	3.5"					
		120	3.8"	3.0"	3.2"	2.7"	3.5"										
		200															

ANCHORS TO WOOD W/ 0.75" EDGE DISTANCE

HOST STRUCT.	ANCHOR	LOAD (psf)	0.75" MIN EDGE DISTANCE														
			Spans Up To 5'-6" CONN TYPE					Spans Up To 9'-0" CONN TYPE					Spans Up To 13'-9" CONN TYPE				
			C1	C2	C3	C4	C5	C1	C2	C3	C4	C5	C1	C2	C3	C4	C5
WOOD	1/4"x2-1/4" MASONRY SCREW (U.S.S.A.) OR TAPCON (ITW) WITH 1-5/8" EMBED	47	12.0"	11.1"	12.0"	11.3"	11.9"	12.0"	6.6"	12.0"	6.4"	7.0"	10.8"	4.2"	9.0"	4.0"	4.5"
		60	12.0"	8.5"	12.0"	8.5"	9.1"	12.0"	5.1"	11.6"	4.8"	5.4"	7.9"	3.3"	6.4"	3.1"	3.5"
		72	12.0"	7.0"	12.0"	6.8"	7.5"	10.8"	4.2"	8.9"	4.0"	4.5"	6.3"		5.1"		
		120	10.5"	4.1"	8.7"	3.9"	4.4"	5.7"		4.6"			5.2"		4.2"		
		200	5.6"		4.5"			5.2"		4.2"			5.2"		4.2"		
	1/4" LAG SCREW WITH 1.5" MIN THREAD PENETR EMBED	47	12.0"	11.4"	12.0"	11.6"	12.0"	12.0"	6.8"	12.0"	6.6"	7.1"	12.0"	4.4"	10.3"	4.1"	4.6"
		60	12.0"	8.8"	12.0"	8.7"	9.3"	12.0"	5.2"	12.0"	5.0"	5.5"	9.1"	3.4"	7.4"	3.2"	3.6"
		72	12.0"	7.2"	12.0"	7.1"	7.7"	12.0"	4.3"	10.2"	4.1"	4.6"	7.3"		5.9"		3.0"
		120	12.0"	4.3"	10.0"	4.0"	4.5"	6.5"		5.3"			6.0"		4.8"		
		200	6.4"		5.2"			6.0"		4.8"			6.0"		4.8"		

ANCHOR NOTES:

1. SEE EXTERIOR ELEVATION FOR ANCHOR LOCATIONS AND/OR SPACING.
2. ANCHORS SHALL BE INSTALLED IN ACCORDANCE WITH MANUFACTURERS' RECOMMENDATIONS.
3. U.S.S.A. ANCHORS SHALL BE PER TEST REPORTS #07-008 AND #07-009 AND AS TESTED WITH THIS PRODUCT IN TEST REPORTS #07-003 TAS AND #07-016 TAS BY CONSTRUCTION TESTING CORPORATION.
4. TAPCONS SHALL BE CARBON STEEL AND MANUFACTURED BY ITW.
5. ENSURE MINIMUM 2.5" EDGE DISTANCE FOR ALL ANCHORS TO CONCRETE & TO HOLLOW BLOCK.
6. WHERE ANCHORS FASTEN TO NARROW FACE OF STUD FRAMING, ANCHOR SHALL BE LOCATED IN CENTER OF NOMINAL 2x (MIN) WOOD STUD (i.e. 3/4" EDGE DISTANCE IS ACCEPTABLE FOR ANCHORS TO WOOD FRAMING).
7. WOOD HOST STRUCTURE SHALL BE "SOUTHERN PINE" G=0.55 OR GREATER DENSITY.
8. MINIMUM EMBEDMENT SHALL BE AS NOTED IN ANCHOR SCHEDULE. MINIMUM EMBEDMENT AND EDGE DISTANCE EXCLUDES STUCCO, FOAM, BRICK, AND OTHER WALL FINISHES.
9. ANCHOR SCHEDULE APPLIES TO ALL PRODUCTS CERTIFIED HEREIN, BUT ONLY PROVIDES MAXIMUM ALLOWABLE ANCHOR SPACING. MAXIMUM ALLOWABLE SPANS AND PRESSURES INDICATED IN SPAN SCHEDULE SHALL APPLY.
10. WHERE EXISTING STRUCTURE IS WOOD FRAMING, EXISTING CONDITIONS MAY VARY. FIELD VERIFY THAT FASTENERS ARE INTO ADEQUATE WOOD FRAMING MEMBERS, NOT INTO PLYWOOD.
11. WOOD BUCKS (BY OTHERS) SHALL BE ANCHORED PROPERLY TO TRANSFER LOADS TO THE EXISTING STRUCTURE.
12. MACHINE SCREWS SHALL HAVE MINIMUM OF 1/2" ENGAGEMENT OF THREADS IN BASE ANCHOR AND MAY HAVE EITHER A PAN HEAD, TRUSS HEAD, OR WAFER HEAD ("SIDEWALK BOLT") U.N.O.
13. ▨ DESIGNATES ANCHOR CONDITIONS WHICH ARE NOT ACCEPTABLE FOR USE.
13. * DESIGNATES ANCHORS WHICH ARE REMOVABLE.

Approved as complying with the Florida Building Code
Date 10/02/2008
NOA# 08-0725.02
Miami Dade Product Control Division
By

FRANK L. BENNARDO, P.E.
PE0046549
07/23/2008

ENGINEERING EXPRESS®
160 SW 12th AVENUE, #106
DEERFIELD BEACH, FL 33442
Ph: (954) 354-0660 Fax: (954) 354-0443
WWW.ENGEXP.COM
CERT OF AUTH #9885

WBPI
9040 BELVEDERE ROAD
WEST PALM BEACH, FL 33411
MEMBER OF THE UNITED SHUTTER SYSTEMS ASSOCIATION

COMMANDO SERIES 2 ACCORDION SHUTTERS
WITH POLYCARBONATE AND ALUMINUM BLADES
MIAMI-DADE NOTICE OF ACCEPTANCE

REMARKS	DRWN	CHKD	DATE
INIT ISSUE	KL	CL	07/17/07
REVISED PER COMMENTS	RKB	CL	02/20/08

08-WBP-0003
SCALE: - 01
PAGE DESCRIPTION:
-
-

07/23/2008 - 11:48am TroyB F:\01 Project Files\WeatherGuard (WBP)\2008 Jobs\08-WBP-0003 Commando Accordion Shutter, Series 2 (NOA)\08-WBP-0003 Commando Accordion Shutter, Series 2 (NOA).dwg