MIAMI-DADE COUNTY
BUILDING CODE COMPLIANCE OFFICE (BCCO)
PRODUCT CONTROL DIVISION

MIAMI-DADE COUNTY, FLORIDA
METRO-DADE FLAGLER BUILDING
140 WEST FLAGLER STREET, SUITE 1603
MIAMI, FLORIDA 33130-1563
(305) 375-2901 FAX (305) 372-6339
www.maimidade.gov/buildingcode

NOTICE OF ACCEPTANCE (NOA)

PGT Industries
1070 Technology Drive
Nokomis, FL 34275

SCOPE:

This NOA is being issued under the applicable rules and regulations governing the use of construction materials. The documentation submitted has been reviewed by Miami-Dade County Product Control Division and accepted by the Board of Rules and Appeals (BORA) to be used in Miami Dade County and other areas where allowed by the Authority Having Jurisdiction (AHJ).

This NOA shall not be valid after the expiration date stated below. The Miami-Dade County Product Control Division (In Miami Dade County) and/or the AHJ (in areas other than Miami Dade County) reserve the right to have this product or material tested for quality assurance purposes. If this product or material fails to perform in the accepted manner, the manufacturer will incur the expense of such testing and the AHJ may immediately revoke, modify, or suspend the use of such product or material within their jurisdiction. BORA reserves the right to revoke this acceptance, if it is determined by Miami-Dade County Product Control Division that this product or material fails to meet the requirements of the applicable building code.

This product is approved as described herein, and has been designed to comply with the Florida Building Code, including the High Velocity Hurricane Zone.

DESCRIPTION: Series "SH 500 Vinyl" White PVC Single Hung Window – L.M.I.

APPROVAL DOCUMENT: Drawing No. **5191-1**, titled "Vinyl Single Hung Window Impact", sheets 1 through 11 of 11, dated 08/07/08 with revision "B" dated 12/18/08, prepared by manufacturer, signed and sealed by Robert L. Clark, P.E., bearing the Miami-Dade County Product Control Approval stamp with the Notice of Acceptance number and Approval date by the Miami-Dade County Product Control Division.

MISSILE IMPACT RATING: Large and Small Missile Impact Resistant

LABELING: Each unit shall bear a permanent label with the manufacturer's name or logo, city, state and following statement: "Miami-Dade County Product Control Approved", unless otherwise noted herein.

RENEWAL of this NOA shall be considered after a renewal application has been filed and there has been no change in the applicable building code negatively affecting the performance of this product.

TERMINATION of this NOA will occur after the expiration date or if there has been a revision or change in the materials, use, and/or manufacture of the product or process. Misuse of this NOA as an endorsement of any product, for sales, advertising or any other purposes shall automatically terminate this NOA. Failure to comply with any section of this NOA shall be cause for termination and removal of NOA.

ADVERTISEMENT: The NOA number preceded by the words Miami-Dade County, Florida, and followed by the expiration date may be displayed in advertising literature. If any portion of the NOA is displayed, then it shall be done in its entirety.

INSPECTION: A copy of this entire NOA shall be provided to the user by the manufacturer or its distributors and shall be available for inspection at the job site at the request of the Building Official.

This NOA consists of this page 1 and evidence pages E-1 and E-2, as well as approval document mentioned above.

The submitted documentation was reviewed by **Manuel Perez, P.E.**

MIAMI-DADE COUNTY APPROVED

PGT Industries

NOTICE OF ACCEPTANCE: EVIDENCE SUBMITTED

A. DRAWINGS

1. Manufacturer's die drawings and sections.
2. Drawing No **5191-1**, titled "Vinyl Single Hung Window Impact", sheets 1 through 11 of 11, dated 08/07/08 with revision "B" dated 12/18/08, prepared by manufacturer, signed and sealed by Robert L. Clark, P.E.

B. TESTS

1. Test reports on: 1) Air Infiltration Test, per FBC, TAS 202-94
   2) Uniform Static Air Pressure Test, Loading per FBC TAS 202-94
   3) Water Resistance Test, per FBC, TAS 202-94
   4) Large Missile Impact Test per FBC, TAS 201-94
   5) Cyclic Wind Pressure Loading per FBC, TAS 203-94
   6) Forced Entry Test, per FBC 2411 3.2.1, TAS 202-94

   along with marked-up drawings and installation diagram of a vinyl fixed window, prepared by Fenestration Testing Laboratory, Inc., Test Report No. **FTL-5710**, dated 08/13/08, signed and sealed by Carlos S. Rionda, P.E.
2. Test reports on: 1) Air Infiltration Test, per FBC, TAS 202-94
   2) Uniform Static Air Pressure Test, Loading per FBC TAS 202-94
   3) Water Resistance Test, per FBC, TAS 202-94
   4) Large Missile Impact Test per FBC, TAS 201-94
   5) Cyclic Wind Pressure Loading per FBC, TAS 203-94
   6) Forced Entry Test, per FBC 2411 3.2.1, TAS 202-94

   along with marked-up drawings and installation diagram, prepared by Architectural Testing, Inc., Test Report No. **ATI-84576.01-401-47**, dated 10/31/08, signed and sealed by Joseph A. Reed, P.E. ***(For Reference only)***

C. CALCULATIONS

1. Anchor verification calculations and structural analysis, complying with FBC-2004 and 2007, prepared by manufacturer, dated 11/25/08, signed and sealed by Robert L. Clark, P.E.
   Complies with ASTM E1300-02/04

D. QUALITY ASSURANCE

1. Miami Dade Building Code Compliance Office (BCCO).

Manuel Perez

Manuel Perez, P.E.
Product Control Examiner
NOA No. 08-0820.14
Expiration Date: January 08, 2014
Approval Date: January 08, 2009

NOTICE OF ACCEPTANCE: EVIDENCE SUBMITTED

E. MATERIAL CERTIFICATIONS

1. Notice of Acceptance No. **05-1208.02** issued to E.I. DuPont DeNemours & Co., Inc. for their "**DuPont Butacite PVB, Interlayer**" dated 01/05/06, expiring on 12/11/10.
2. Notice of Acceptance No. **06-1220.01** issued to Spectus Systems – A Mikron Company for their "**White Rigid PVC Exterior Extrusions for Windows and Doors**" dated 01/11/07, expiring on 12/26/11.

F. STATEMENTS

1. Statement letter of conformance, dated August 12, 2008, signed and sealed by Robert L. Clark, P.E.
2. Statement letter of no financial interest, dated August 12, 2008, signed and sealed by Robert L. Clark, P.E.
3. Laboratory compliance letter for Test Report No. **FTL-5710**, issued by Fenestration Testing Laboratory, Inc., dated 08/13/08, signed and sealed by Carlos S. Rionda, P.E.
4. Laboratory compliance letter for Test Report no. **ATI-84576.01-401-47**, issued by Architectural Testing, Inc., dated October 31, 2008, signed and sealed by Joseph A. Reed, P.E. **(For Reference only)**

G. OTHERS

1. None

Manuel Perez, P.E.
Product Control Examiner
NOA No. 08-0820.14
Expiration Date: January 08, 2014
Approval Date: January 08, 2009

GENERAL NOTES: LARGE MISSILE IMPACT SINGLE HUNG BOX FRAME AND INTEGRAL FIN WINDOWS

1. GLAZING OPTIONS:
   A. 3/4" LAMI I.G. GLASS COMPRISED OF (1) LITE OF 1/8" TEMPERED OR ANNEALED GLASS, AIRSPACE AND 5/16" LAMINATED GLASS WHICH IS COMPRISED OF (2) LITES OF 1/8" ANNEALED GLASS WITH AN .090 INTERLAYER OF DUPONT PVB.
   B. 7/8" LAMI I.G. GLASS COMPRISED OF (1) LITE OF 1/8" TEMPERED OR ANNEALED GLASS, AIRSPACE AND 5/16" LAMINATED GLASS WHICH IS COMPRISED OF (2) LITES OF 1/8" ANNEALED GLASS WITH AN .090 INTERLAYER OF DUPONT PVB.

2. CONFIGURATIONS: 1/1 AND PROVIEW

3. DESIGN PRESSURES: -70/+60 PSF (ALL GLASS TYPES LISTED ABOVE)

   A. NEGATIVE DESIGN LOADS BASED ON TESTED PRESSURE AND GLASS TABLES ASTM E 1300-02.

   B. POSITIVE DESIGN LOADS BASED ON WATER TEST PRESSURE AND GLASS TABLES ASTM E 1300-02.

4. ANCHORAGE: THE 33 1/3% STRESS INCREASE HAS NOT BEEN USED IN THE DESIGN OF THIS PRODUCT. MATERIALS, INCLUDING BUT NOT LIMITED TO STEEL SCREWS, THAT COME INTO CONTACT WITH OTHER DISSIMILAR MATERIALS SHALL MEET THE REQUIREMENTS OF THE FLORIDA BUILDING CODE, CURRENT EDITION. SEE SHEETS 9 THROUGH 11 FOR ANCHORAGE DETAILS.

5. SHUTTERS ARE NOT REQUIRED FOR UNITS LESS THAN 30'.

6. REFERENCES: TEST REPORTS FTL-5710.
   ANSI/AF&PA NDS-2001 FOR WOOD CONSTRUCTION
   ADM-2000 ALUMINUM DESIGN MANUAL

7. THIS PRODUCT HAS BEEN DESIGNED & TESTED TO COMPLY WITH THE REQUIREMENTS OF THE FLORIDA BUILDING CODE, CURRENT EDITION, INCLUDING THE HIGH VELOCITY HURRICANE ZONE (HVHZ).

NOA DRAWING TABLE OF CONTENTS

	SHEET
GENERAL NOTES	1
ELEVATIONS	2
GLAZING DETAILS	3
GLAZING DETAILS	4
SECTIONS, I.F. FRAME	5
SECTIONS, BOX FRAME	6
PARTS LIST	7
EXTRUSIONS	8
ANCHORAGE SPACING, BOX FRAME	9
ANCHORAGE DETAILS, BOX FRAME	10
ANCHORAGE DETAILS, I.F. FRAME	11

Approved as complying with the Florida Building Code
Date 01/08/2009
NOA# 08-0820.14
Miami Dade Product Control Division
By Manuel Perez

Robert L. Clark
12/18/08
Robert L. Clark, P.E.
PE #39712
Structural

Revsd By:	Date:	Revisions:	
D.G.	11/25/08	A	PER MIAMI-DADE LETTER DATED 10/31/08
D.G.	12/18/08	B	NO CHANGE THIS SHEET
Revsd By:	Date:	Revisions:	
Drawn By: D.G.	Date: 8/07/08	Checked By:	Date:

1070 TECHNOLOGY DRIVE
NOKOMIS, FL 34275

P.O. BOX 1529
NOKOMIS, FL 34274

PGT Visibly Better

Description: GENERAL NOTES

Title: Vinyl Single Hung Window, Large Missile Impact

Series/Model:	Scale:	Sheet:	Drawing No.	Rev:
SH500	NTS	1 of 11	5191-1	B

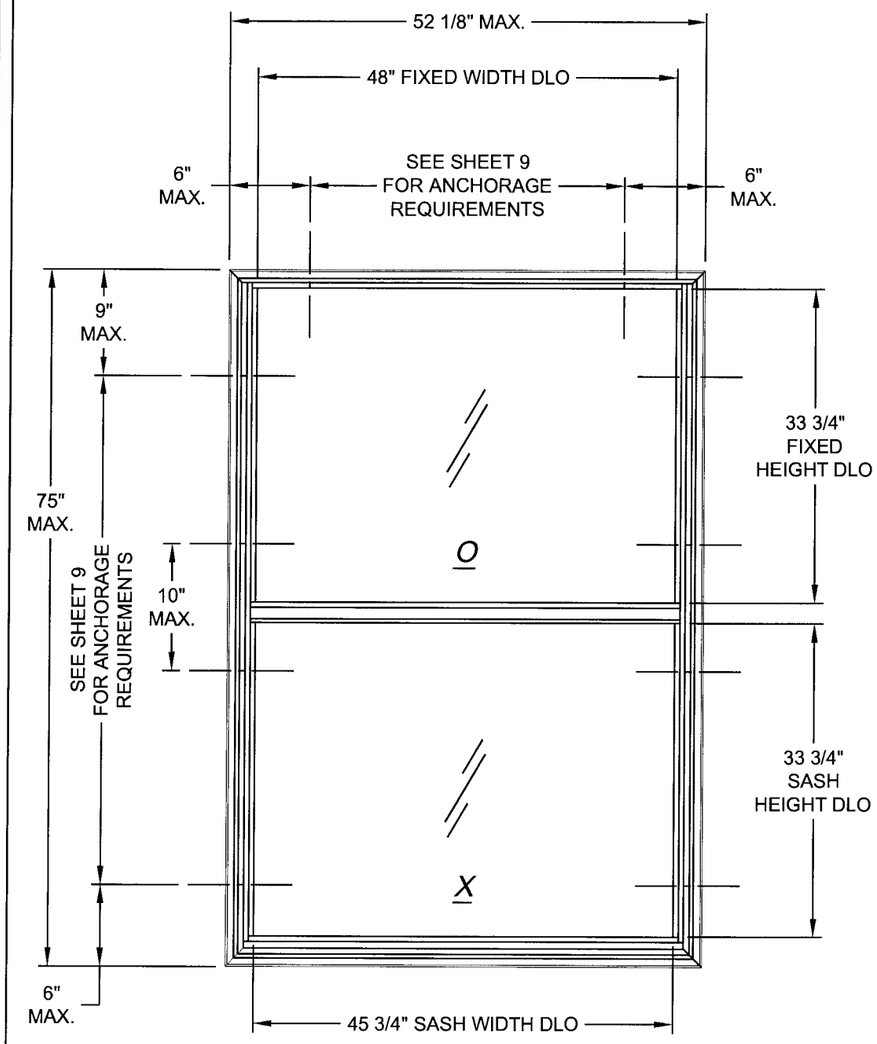

BOX FRAME

MAX. SIZE = 52.125" X 75"

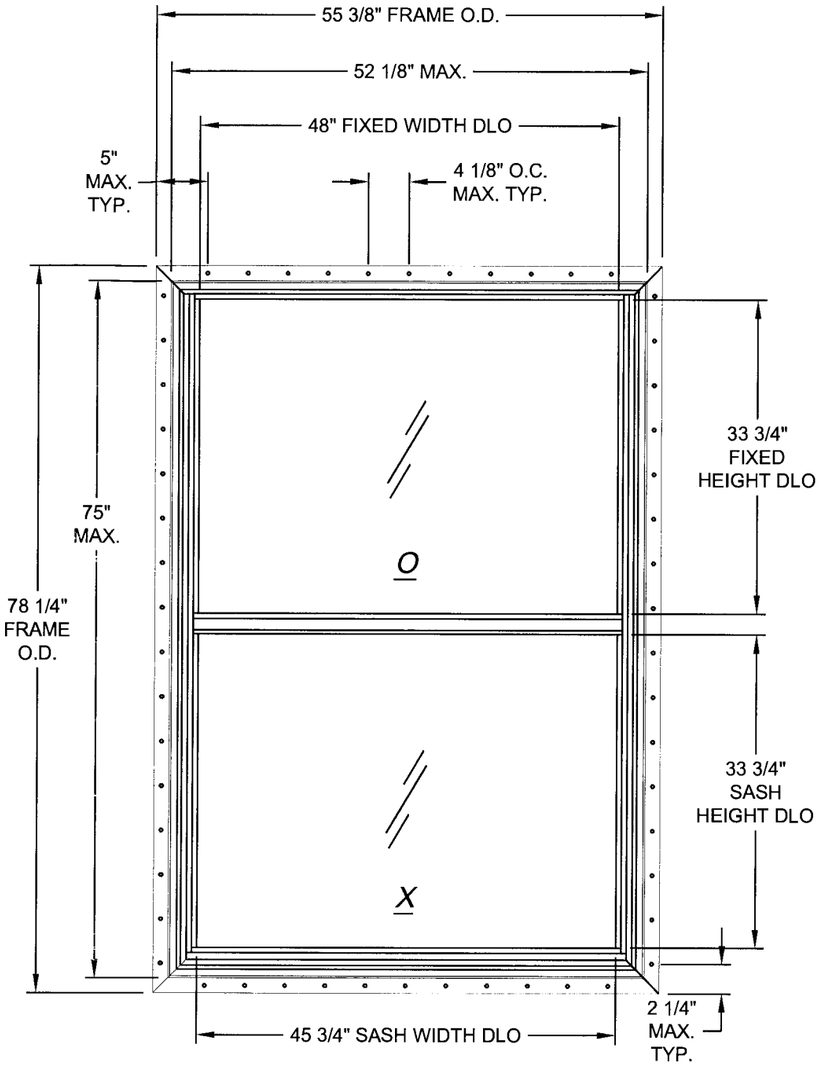

INTEGRAL FIN

MAX. SIZE = 52.125" X 75"

NOTE:

1. FOR BOX FRAME SECTIONS SEE SHEET 6 AND ANCHORAGE INFORMATION SEE SHEETS 9 AND 10.
2. FOR INTEGRAL FIN FRAME SECTIONS SEE SHEET 5 AND ANCHORAGE INFORMATION SEE SHEET11.

Revsd By:	Date:	Revisions:	
D.G.	11/25/08	A	PER MIAMI-DADE LETTER DATED 10/31/08
D.G.	12/18/08	B	ADDED 10" MAX. DIMENSION TO BOX FRAME ELEVATION
Revsd By:	Date:	Revisions:	
Drawn By: D.G.	Date: 08/07/08	Checked By:	Date:

1070 TECHNOLOGY DRIVE
NOKOMIS, FL 34275

P.O. BOX 1529
NOKOMIS, FL 34274

PGT Visibly Better

Description: ELEVATIONS

Title: Vinyl Single Hung Window, Large Missile Impact

Series/Model:	Scale:	Sheet:	Drawing No.	Rev:
SH500	NTS	2 of 11	5191-1	B

Approved as complying with the Florida Building Code
Date 01/08/2009
NOA# 08-0820.14
Miami-Dade Product Control
By Manuel Perez

12/18/08
Robert L. Clark, P.E.
PE #39712
Structural

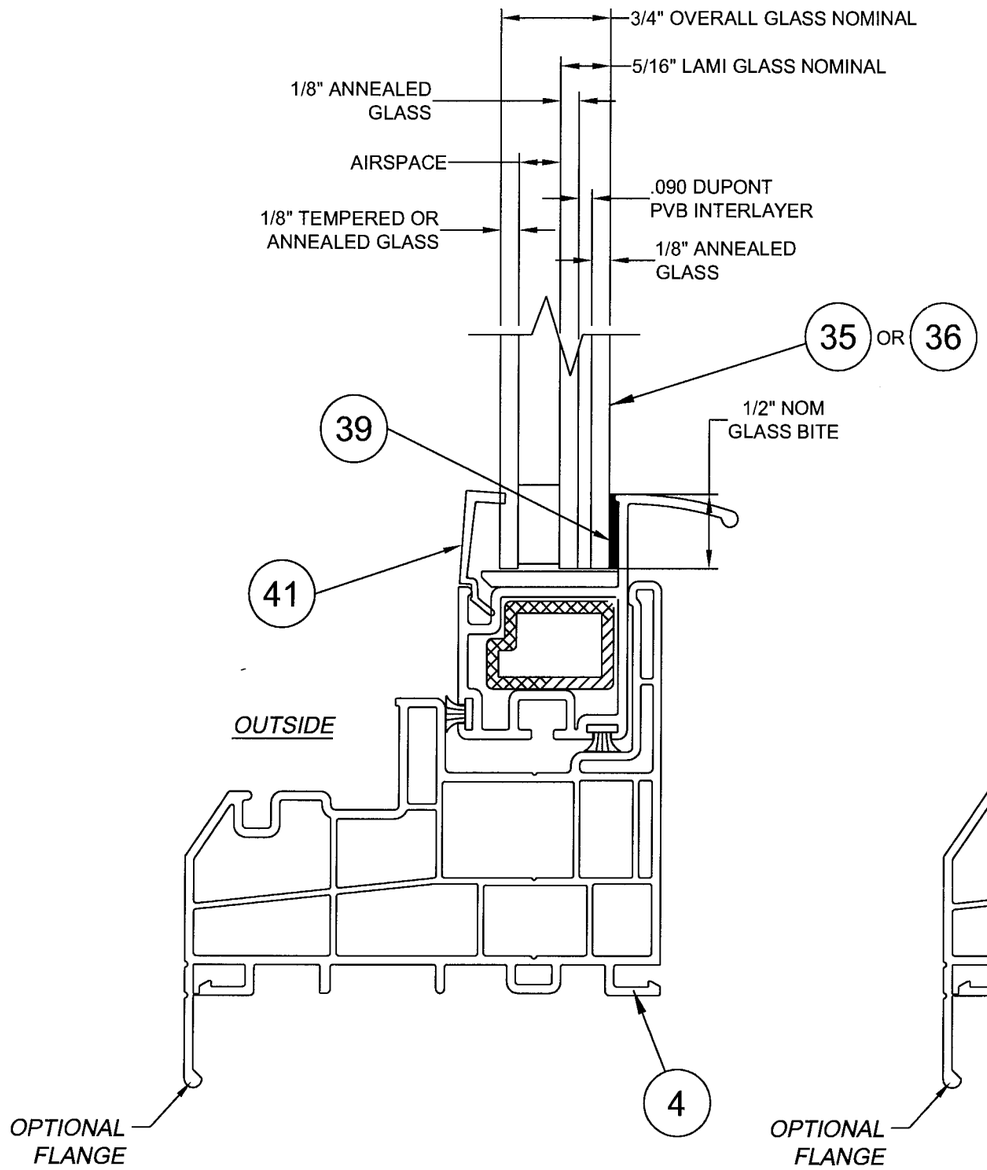

3/4" LAMI I.G. GLAZING DETAIL
WITH 5/16" LAMI GLASS AND 1/8" CAP
BOX OR INTEGRAL FIN FRAME
(BOX FRAME SHOWN)

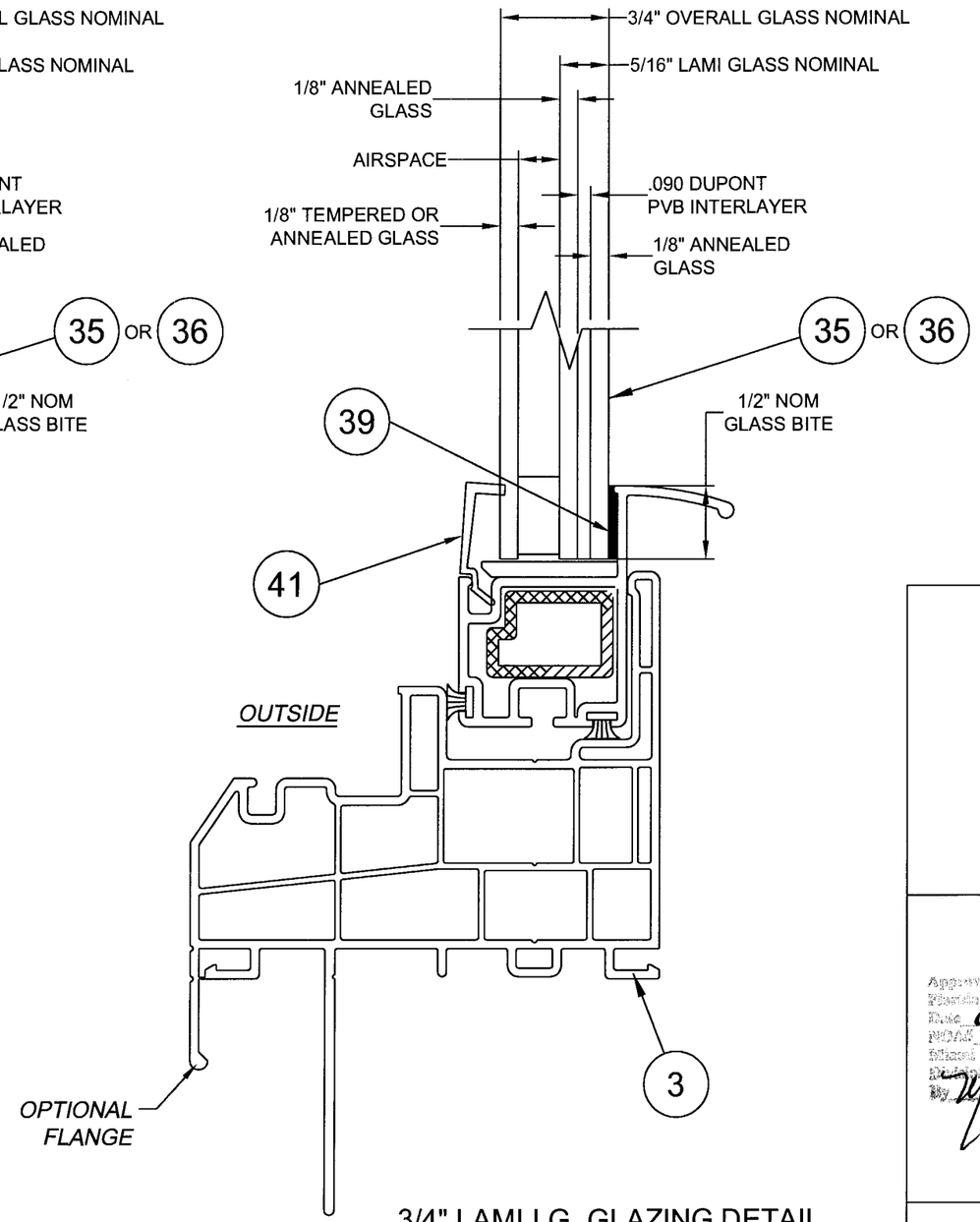

3/4" LAMI I.G. GLAZING DETAIL
WITH 5/16" LAMI GLASS AND 1/8" CAP
BOX OR INTEGRAL FIN FRAME
(INTEGRAL FIN FRAME SHOWN)

Approved as complying with the Florida Building Code
Date 01/08/2009
NOAC 08-0820.14
Miami-Dade Product Control
By Manuel Perez

Revsd By:	Date:	Revisions:	
D.G.	11/25/08	A	PER MIAMI-DADE LETTER DATED 10/31/08
D.G.	12/18/08	B	NO CHANGE THIS SHEET
Revsd By:	Date:	Revisions:	
Drawn By: D.G.	Date: 08/07/08	Checked By:	Date:

1070 TECHNOLOGY DRIVE
NOKOMIS, FL 34275

P.O. BOX 1529
NOKOMIS, FL 34274

PGT Visibly Better

Description: GLAZING DETAILS

Title: Vinyl Single Hung Window, Large Missile Impact

Series/Model:	Scale:	Sheet:	Drawing No.	Rev:
SH500	Full	3 of 11	5191-1	B

12/18/08
Robert L. Clark, P.E.
PE #39712
Structural

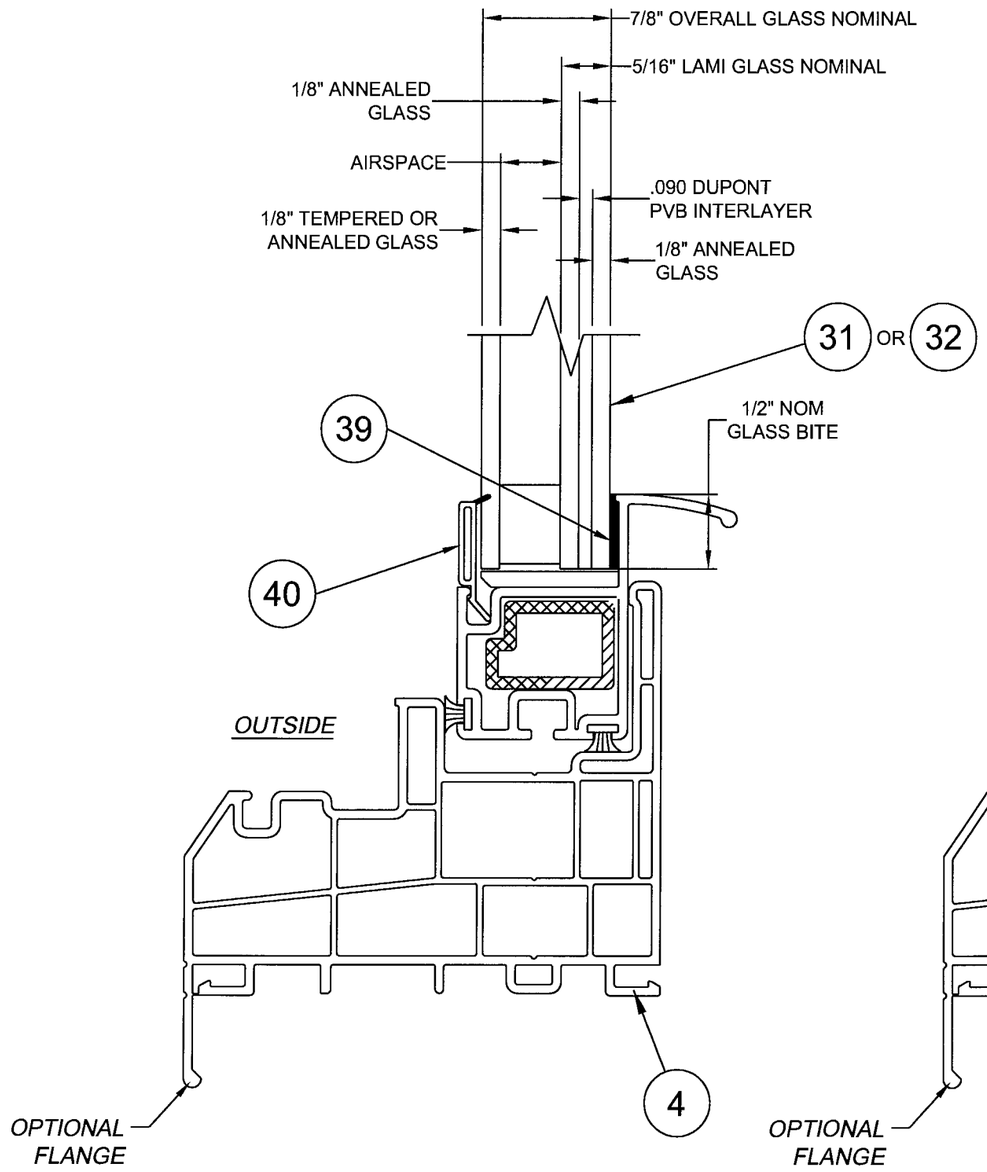

7/8" LAMI I.G. GLAZING DETAIL
WITH 5/16" LAMI GLASS AND 1/8" CAP
BOX OR INTEGRAL FIN FRAME
(BOX FRAME SHOWN)

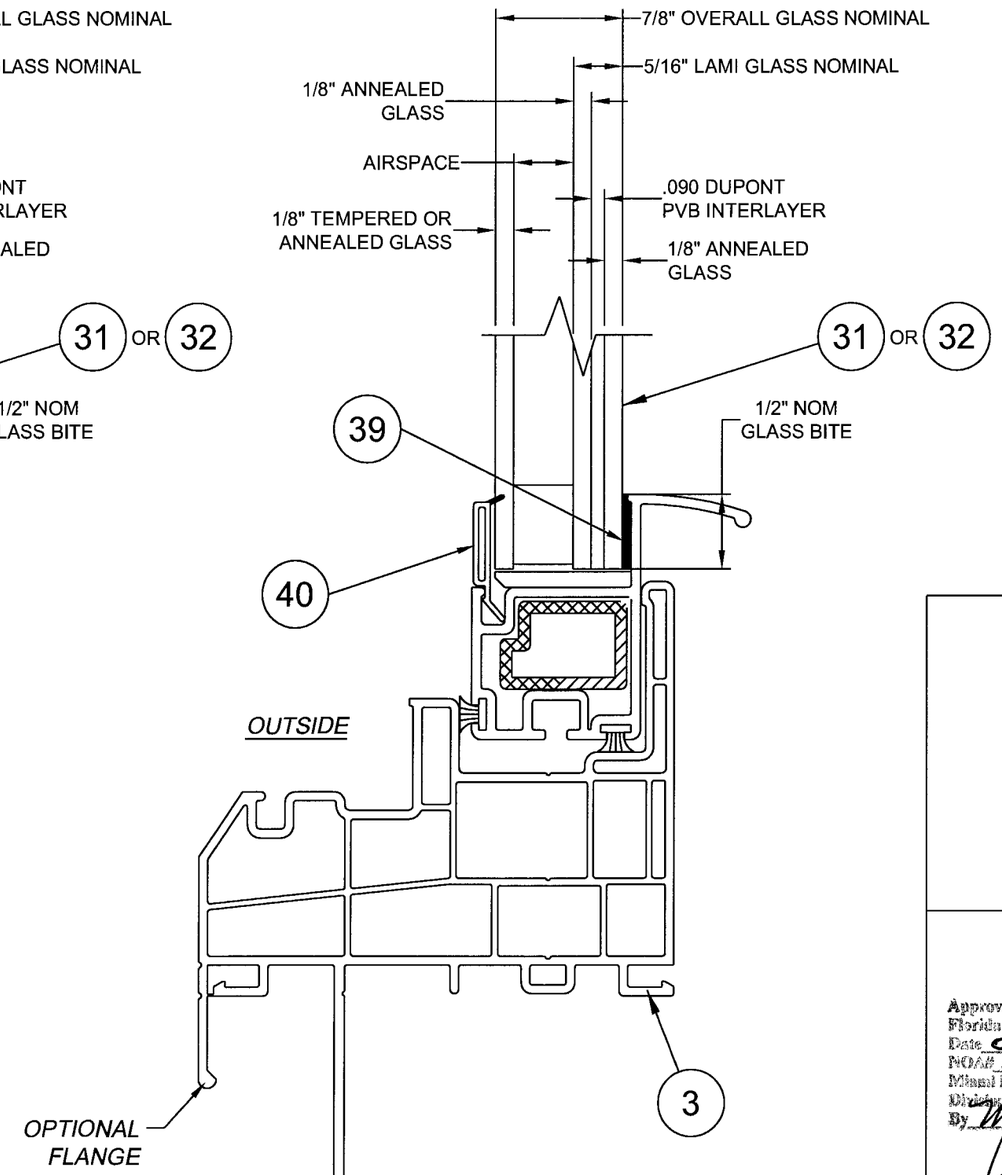

7/8" LAMI I.G. GLAZING DETAIL
WITH 5/16" LAMI GLASS AND 1/8" CAP
BOX OR INTEGRAL FIN FRAME
(INTEGRAL FIN FRAME SHOWN)

Approved as complying with the Florida Building Code
Date 01/08/2009
NOA# 08-0820.14
Miami Dade Product Control Division
By

Revsd By:	Date:	Revisions:	
D.G.	11/25/08	A	PER MIAMI-DADE LETTER DATED 10/31/08
D.G.	12/18/08	B	NO CHANGE THIS SHEET
Revsd By:	Date:	Revisions:	
Drawn By: D.G.	Date: 08/07/08	Checked By:	Date:

1070 TECHNOLOGY DRIVE
NOKOMIS, FL 34275

P.O. BOX 1529
NOKOMIS, FL 34274

PGT Visibly Better

Description: GLAZING DETAILS

Title: Vinyl Single Hung Window, Large Missile Impact

Series/Model:	Scale:	Sheet:	Drawing No.	Rev:
SH500	NTS	4 of 11	5191-1	B

12/18/08
Robert L. Clark, P.E.
PE #39712
Structural

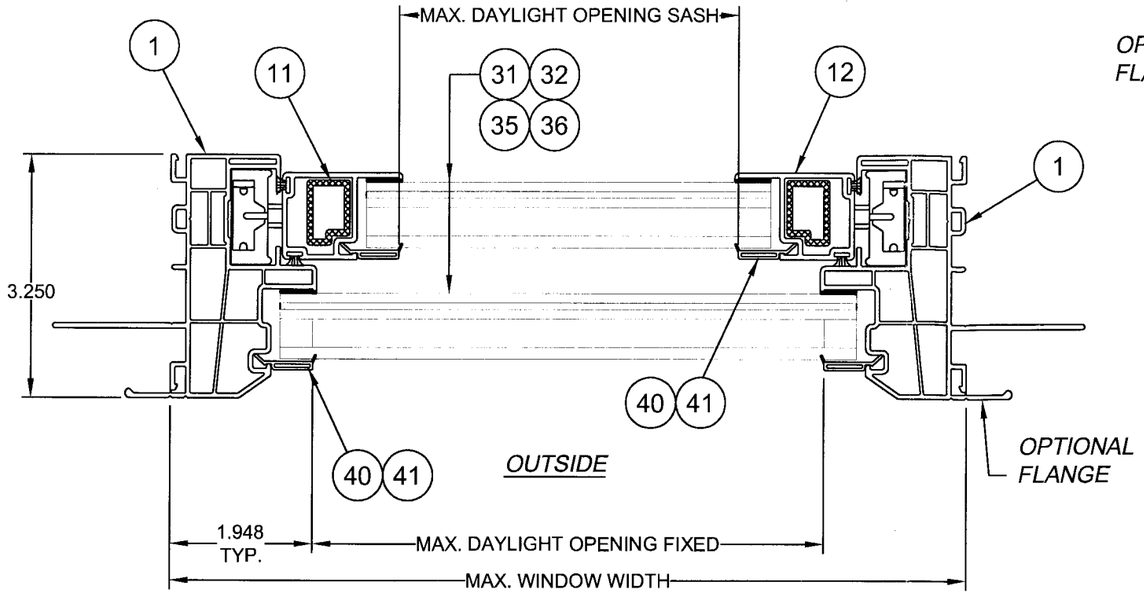

HORIZONTAL SECTION
(INTEGRAL FIN)

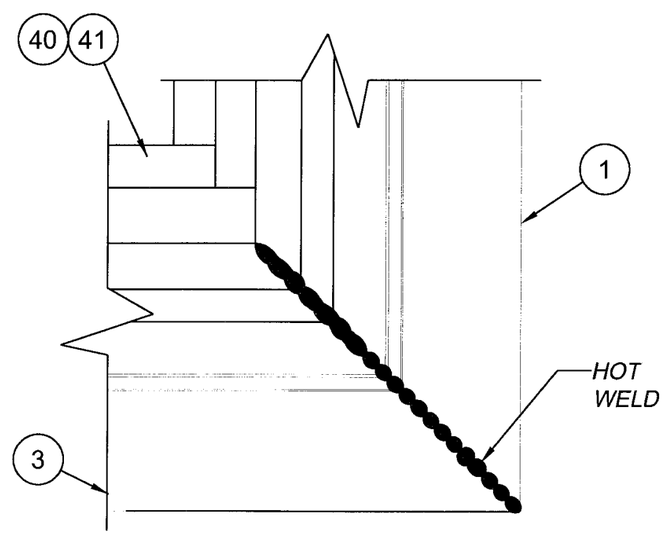

HOT WELD CORNER ASSEMBLY
(INTEGRAL FIN)

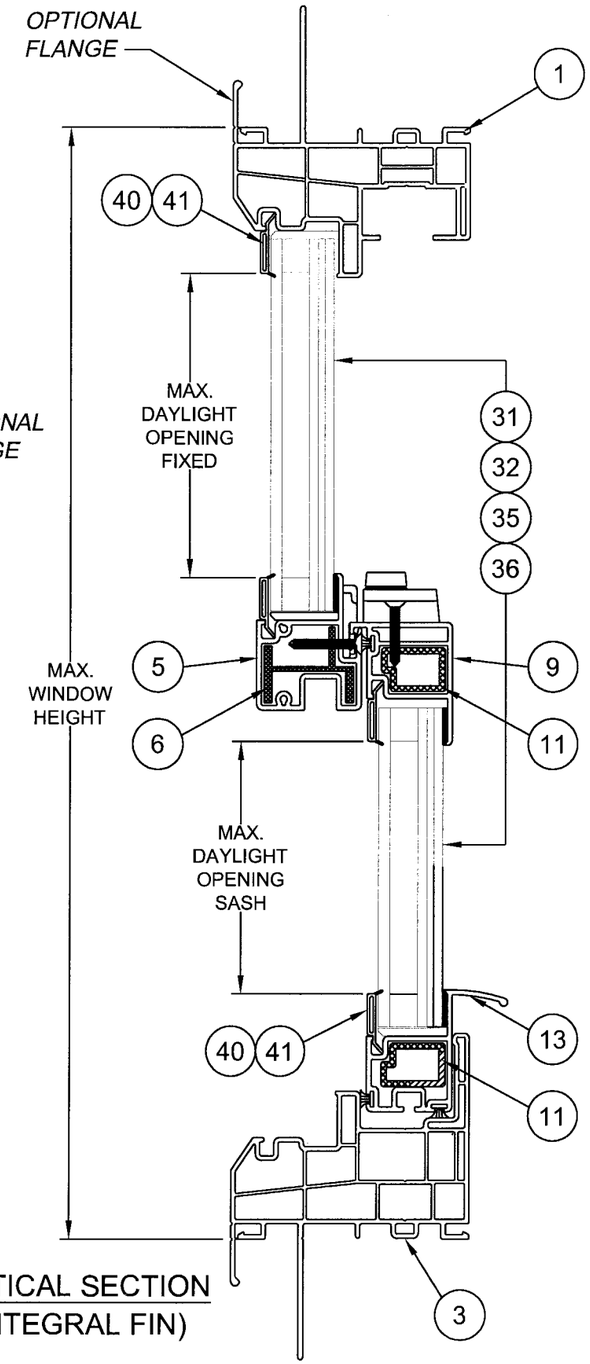

VERTICAL SECTION
(INTEGRAL FIN)

Approved as complying with the Florida Building Code
Date 01/08/2009
NOA# 08-0820.14
Miami Dade Product Control Division
By Manuel Perez

12/18/08

Robert L. Clark, P.E.
PE #39712
Structural

Revsd By:	Date:	Revisions:	
D.G.	11/25/08	A	PER MIAMI-DADE LETTER DATED 10/31/08
D.G.	12/18/08	B	NO CHANGE THIS SHEET
Revsd By:	Date:	Revisions:	
Drawn By: D.G.	Date: 08/07/08	Checked By:	Date:

1070 TECHNOLOGY DRIVE
NOKOMIS, FL 34275

P.O. BOX 1529
NOKOMIS, FL 34274

PGT
Visibly Better

Description: SECTIONS, INTEGRAL FIN FRAME

Title: Vinyl Single Hung Window, Large Missile Impact

Series/Model:	Scale:	Sheet:	Drawing No.	Rev:
SH500	Half	5 of 11	5191-1	B

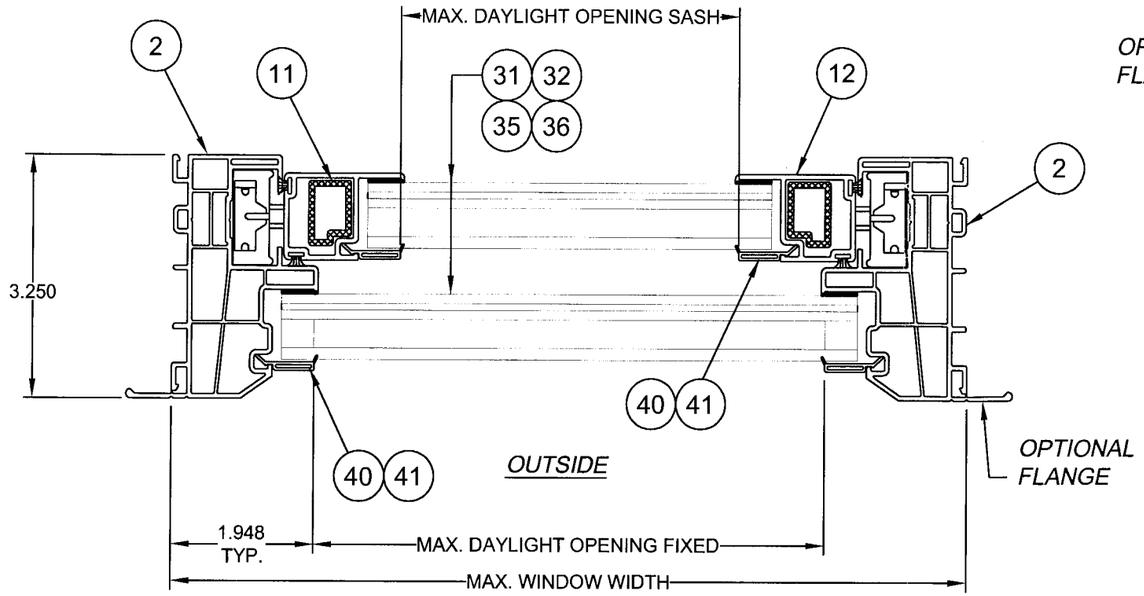

HORIZONTAL SECTION
(BOX FRAME)

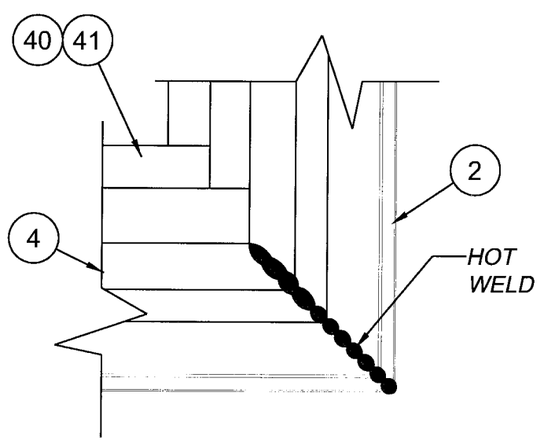

HOT WELD CORNER ASSEMBLY
(BOX FRAME)

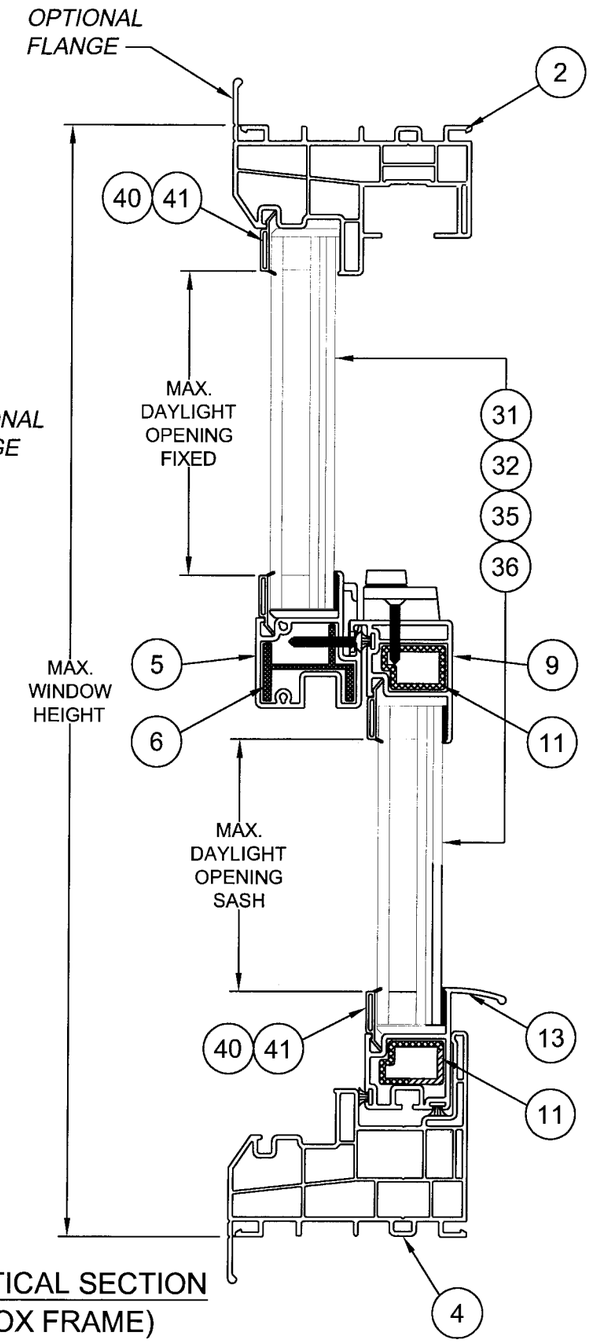

VERTICAL SECTION
(BOX FRAME)

Approved as complying with the Florida Building Code
Date 01/08/2009
NOA# 08-0820.14
Miami Dade Product Control Division
By Manuel Perez

12/18/08

Robert L. Clark, P.E.
PE #39712
Structural

Revsd By:	Date:	Revisions:	
D.G.	11/25/08	A	PER MIAMI-DADE LETTER DATED 10/31/08
D.G.	12/18/08	B	NO CHANGE THIS SHEET
Drawn By: D.G.	Date: 08/07/08	Checked By:	Date:

1070 TECHNOLOGY DRIVE
NOKOMIS, FL 34275

P.O. BOX 1529
NOKOMIS, FL 34274

PGT
Visibly Better

Description: SECTIONS, BOX FRAME

Title: Vinyl Single Hung Window, Large Missile Impact

Series/Model:	Scale:	Sheet:	Drawing No.	Rev:
SH500	Half	6 of 11	5191-1	B

ITEM	DWG NO.	PART #	DESCRIPTION
1	9521	65163	INTEGRAL FIN FRAME HEAD & JAMB
2	9871	69871	BOX FRAME HEAD & JAMB
3	9520	65164	INTEGRAL FIN FRAME SILL
4	9870	69870	BOX FRAME SILL
5	7940	65102	FIXED MEETING RAIL
6	7126.1	65103	MEETING RAIL REINFORCEMENT
7	7942	65109	SASH STOP
8	8873	65117	BALANCE COVERS
9	7092	65105	SASH INTERLOCK
10		61644W	WSTP., .187 X .270 FIN SEAL
11	7092.1	65114	SASH REINFORCEMENT
12	7093	65106	SASH SIDE RAIL
13	7745	65113	SASH LIFT RAIL
14	1669	71669SP	MR SUPPORT PLATE
15	15B110	71694	TILT BALANCE SHOES
16	1686	7FPHPSSPF	PIVOT BARS
17		76208SLAW	CAM SWEEP LOCK
18		76133SLKW	CAM SWEEP LOCK KEEPER
19		79803WF	WEEP HOLE COVER
20		7675RHTL	RH TILT LATCH
21		7675LHTL	LH TILT LATCH
22		71669SP	ALUM. SCREW SUPPORT PLATE
23		71038W	INSTALL HOLE PLUG
24		71684K	SETTING BLOCK
25		71684AK	SETTING BLOCK - SELF ADHESIVE
26		76X1FPTWX	6 X 1" FH TECH (410 SS PAINTED)
27		7612FPTWX	6 X 1/2" FH (410 SS PAINTED)
28		76X2TPA410X	6 X 2" TH VINYL SCREW SS
29		78X114FPAB410X	#8 X 1 1/4"
30		8X1FPAX	#8 X 1"

ITEM	DWG NO.	PART #	DESCRIPTION
31			7/8" LAMI I.G. GLASS: 1/8" TEMPERED OUTBOARD - AIRSPACE - 1/8" ANNEALED - .090 PVB INTERLAYER - 1/8" ANNEALED (5/16" LAMI)
32			7/8" LAMI I.G. GLASS: 1/8" ANNEALED OUTBOARD - AIRSPACE - 1/8" ANNEALED - .090 PVB INTERLAYER - 1/8" ANNEALED (5/16" LAMI)
33			
34			
35			3/4" LAMI I.G. GLASS: 1/8" TEMPERED OUTBOARD - AIRSPACE - 1/8" ANNEALED - .090 PVB INTERLAYER - 1/8" ANNEALED (5/16" LAMI)
36			3/4" LAMI I.G. GLASS: 1/8" ANNEALED OUTBOARD - AIRSPACE - 1/8" ANNEALED - .090 PVB INTERLAYER - 1/8" ANNEALED (5/16" LAMI)
37			
38			
39			SILICONE DOW 1199
40	6492	65112	GLAZING BEAD
41	8483	65148	SDL GLAZING BEAD

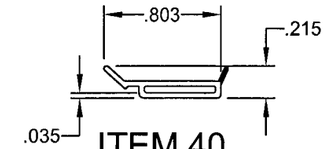

ITEM 40,
I.G. BEAD
MAT'L: White Ridged PVC
by MIKRON Industries, Inc.
DWG NO. 6492

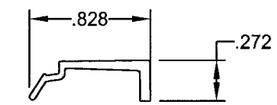

ITEM 41,
SDL BEAD
MAT'L: White Ridged PVC
by MIKRON Industries, Inc.
DWG NO. 8483

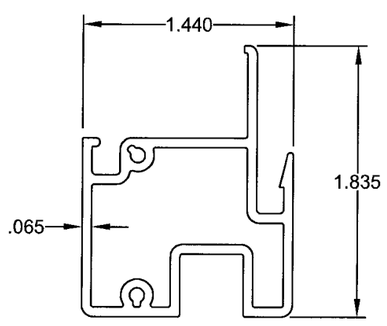

ITEM 5,
FIXED MEETING RAIL
MAT'L: White Ridged PVC
by MIKRON Industries, Inc.
DWG NO. 7940

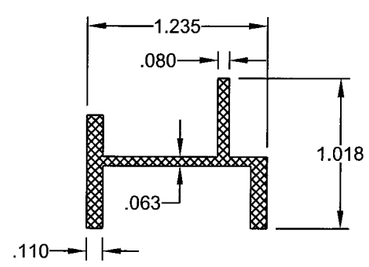

ITEM 6,
FIXED MTG. RAIL REINF.
MAT'L: Alum. (6063-T6)
DWG NO. 7126.1

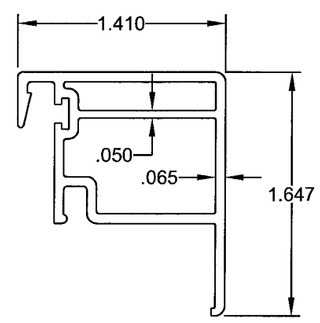

ITEM 9,
SASH INTERLOCK
MAT'L: White Ridged PVC
by MIKRON Industries, Inc.
DWG NO. 7092

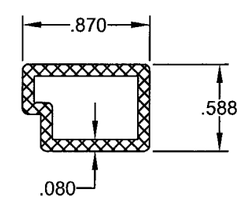

ITEM 11,
SASH REINFORCEMENT
MAT'L: Alum. (6063-T6)
DWG NO. 7092.1

Approved as complying with the Florida Building Code
Date 01/08/2009
NOA# 08-0820.14
Miami Dade Product Control Division
By Manuel Perez

12/18/08

Robert L. Clark, P.E.
PE #39712
Structural

Revsd By:	Date:	Revisions:	
D.G.	11/25/08	A	PER MIAMI-DADE LETTER DATED 10/31/08
D.G.	12/18/08	B	ADDED DIMENSIONS TO ALUM. EXTRUSIONS
Revsd By:	Date:	Revisions:	
Drawn By: D.G.	Date: 08/07/08	Checked By:	Date:

1070 TECHNOLOGY DRIVE
NOKOMIS, FL 34275

P.O. BOX 1529
NOKOMIS, FL 34274

PGT Visibly Better

Description: PARTS LIST AND EXTRUSIONS

Title: Vinyl Single Hung Window, Large Missile Impact

Series/Model:	Scale:	Sheet:	Drawing No.	Rev:
SH500	NTS	7 of 11	5191-1	B

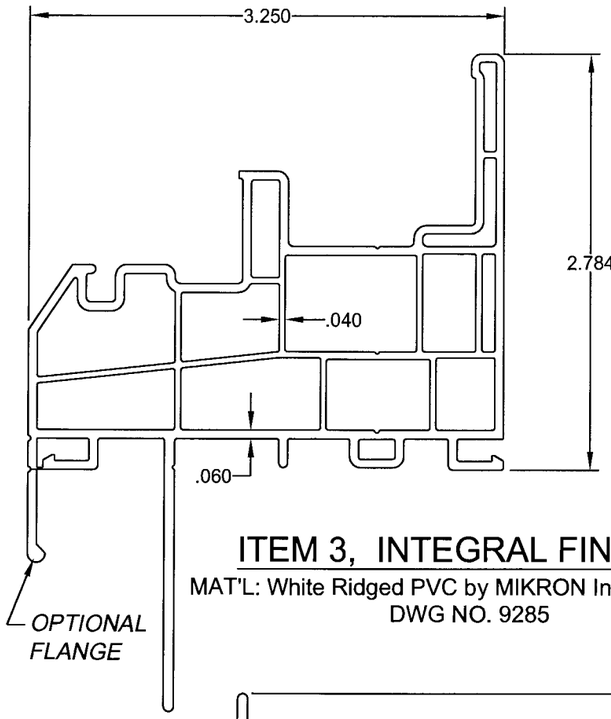

ITEM 3, INTEGRAL FIN SILL

MAT'L: White Ridged PVC by MIKRON Industries, Inc.
DWG NO. 9285

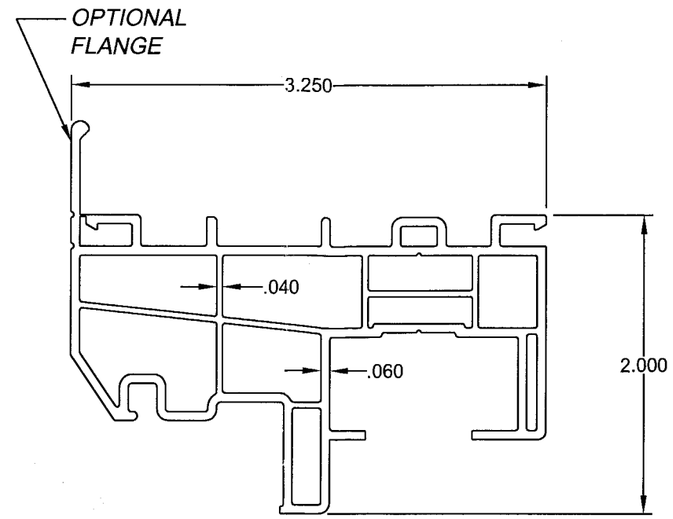

ITEM 2, BOX FRAME HEAD/JAMB

MAT'L: White Ridged PVC
by MIKRON Industries, Inc.
DWG NO. 9288

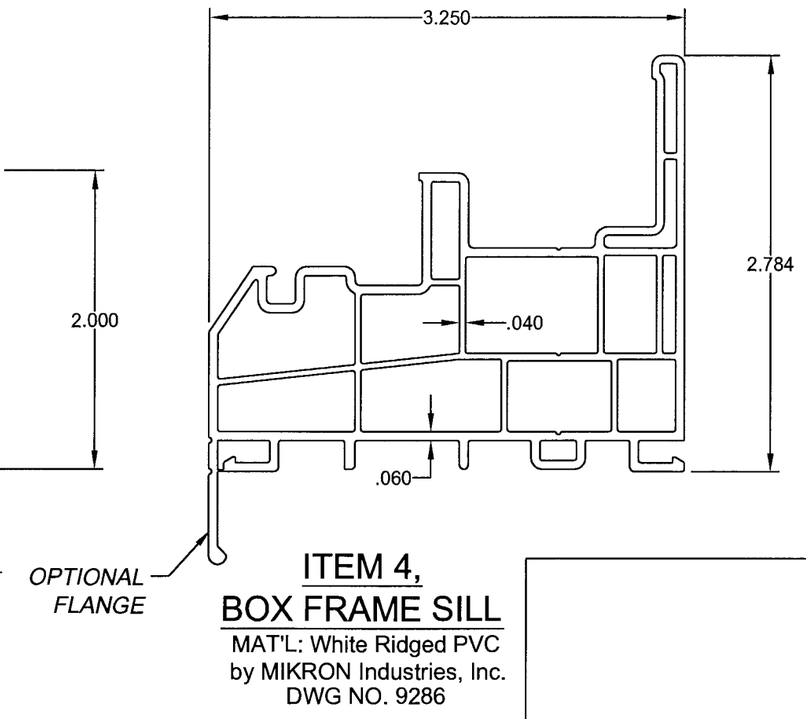

ITEM 4, BOX FRAME SILL

MAT'L: White Ridged PVC
by MIKRON Industries, Inc.
DWG NO. 9286

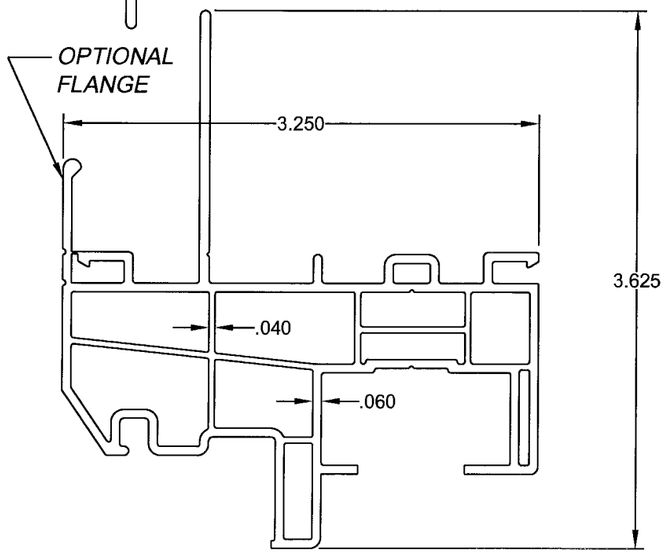

ITEM 1, INTEGRAL FIN HEAD/JAMB

MAT'L: White Ridged PVC by MIKRON Industries, Inc.
DWG NO. 9287

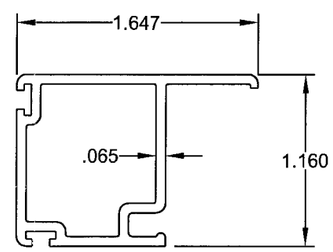

ITEM 12, SASH SIDE RAIL

MAT'L: White Ridged PVC
by MIKRON Industries, Inc.
DWG NO. 7093

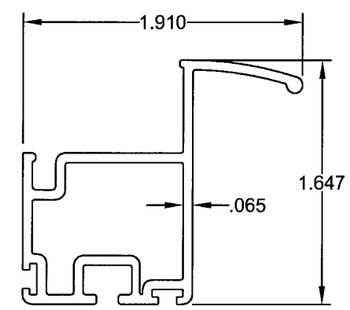

ITEM 13, SASH LIFT RAIL

MAT'L: White Ridged PVC
by MIKRON Industries, Inc.
DWG NO. 7745

Approved as complying with the Florida Building Code
Date 01/08/2009
NOA# 08-0820.14
Miami Dade Product Control Division
By Manuel Perez

12/18/05

Robert L. Clark, P.E.
PE #39712
Structural

Revsd By:	Date:	Revisions:	
D.G.	11/25/08	A	PER MIAMI-DADE LETTER DATED 10/31/08
D.G.	12/18/08	B	NO CHANGE THIS SHEET
Revsd By:	Date:	Revisions:	
Drawn By: D.G.	Date: 08/07/08	Checked By:	Date:

1070 TECHNOLOGY DRIVE
NOKOMIS, FL 34275

P.O. BOX 1529
NOKOMIS, FL 34274

PGT
Visibly Better

Description: EXTRUSIONS

Title: Vinyl Single Hung Window, Large Missile Impact

Series/Model:	Scale:	Sheet:	Drawing No	Rev:
SH500	Half	8 of 11	5191-1	B

ANCHOR QUANTITIES
TABLE 1

View: Fixed	View: Sash	1/1	WINDOW WIDTH 16	20	24	28	32	36	40	44	48	52 1/8	
WINDOW HEIGHT													
X	36	24	2 1 | 1	2 1 | 1	2 1 | 1	2 1 | 1	2 1 | 1	3 1 | 1	3 1 | 1	3 1 | 1	3 1 | 2	3 1 | 2	
25	45	30	2 1 | 1	2 1 | 1	2 1 | 1	2 1 | 1	2 1 | 1	3 1 | 1	3 1 | 2	3 1 | 2	3 1 | 2	3 1 | 2	
30	54	36	2 1 | 1	2 1 | 1	2 1 | 1	2 1 | 1	2 1 | 2	3 1 | 2	3 1 | 2	3 1 | 2	3 1 | 2	3 1 | 2	
35	62 1/2	42	2 1 | 2	2 1 | 2	2 1 | 2	2 1 | 2	2 1 | 2	3 1 | 2	3 1 | 2	3 2 | 2	3 2 | 2	3 2 | 2	*
40	X	48	2 2 | 2	2 2 | 2	2 2 | 2	2 2 | 2	2 2 | 2	3 2 | 2	3 2 | 2	3 2 | 2	3 2 | 3	3 2 | 3	
45	X	54	2 2 | 2	2 2 | 2	2 2 | 2	2 2 | 2	2 2 | 2	3 2 | 2	3 2 | 2	3 2 | 3	3 2 | 3	3 2 | 3	
50	X	60	2 2 | 2	2 2 | 2	2 2 | 2	2 2 | 2	2 2 | 2	3 2 | 2	3 2 | 3	3 2 | 3	3 2 | 3	3 2 | 3	
55	X	66	2 2 | 3	2 2 | 3	2 2 | 3	2 2 | 3	2 2 | 3	3 2 | 3	3 2 | 3	3 2 | 3	3 2 | 3	3 3 | 4	
60	X	72	2 2 | 3	2 2 | 3	2 2 | 3	2 2 | 3	2 2 | 3	3 2 | 3	3 2 | 3	3 3 | 3	3 3 | 4	3 3 | 4	
62 1/2	X	75	2 3 | 3	2 3 | 3	2 3 | 3	2 3 | 3	2 3 | 3	3 3 | 3	3 3 | 3	3 3 | 3	3 3 | 4	3 3 | 4	**

Example: 52.125 x 75 For 1/1 Window s

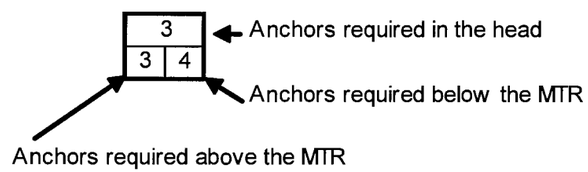

Example: 52.125 x 62.500 For View Window s

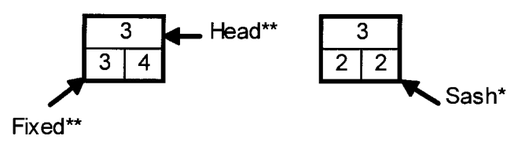

NOTE: FOR VIEW WINDOWS USE VIEW FIXED WINDOW HEIGHT FOR ANCHOR QUANTITY IN HEAD AND ABOVE THE MTR, AND USE THE VIEW SASH WINDOW HEIGHT FOR ANCHOR QUANTITY BELOW THE MTR. MAXIMUM HEIGHT FOR VIEW WINDOW IS 62 1/2".

NOTE: FOR VIEW WINDOW THE LARGEST CAN NOT EXCEED THE TESTED SIZE.

ANCHORAGE NOTES FOR BOX FRAME:

1. ANCHOR TYPES: 1 - 3/16" ULTRACONS
   2 - #10 SCREWS
2. ANCHOR LOCATIONS ARE BASED ON THE FOLLOWIING DIMENSIONS.
   HEAD - 6" MAX. FROM TOP CORNERS
   JAMBS - 9" MAX. FROM TOP CORNERS*
   (*NOT TO EXCEDE 1/4 OF TOTAL WINDOW HEIGHT)
   6" MAX. FROM BOTTOM CORNERS
   4" MIN. BELOW MTG. RAIL
   SILL - ANCHORS NOT REQUIRED
3. INSTALL PER THE ADJACENT TABLE ANCHOR QUANTITIES USING THE DIMENSIONAL CRITERIA OF NOTE 2.
4. ANCHORAGE SHOWN FOR BOX FRAME WITH OR WITHOUT OPTIONAL FLANGE.
5. FOR INTEGRAL NAIL FIN FRAME ANCHORAGE, SEE SHEET 11.

1/1 WINDOW

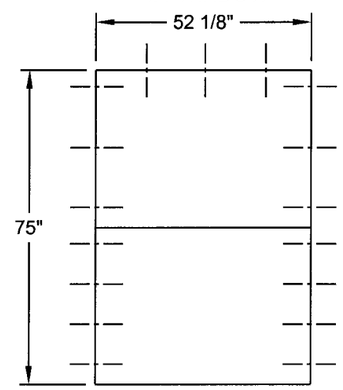

VIEW WINDOW

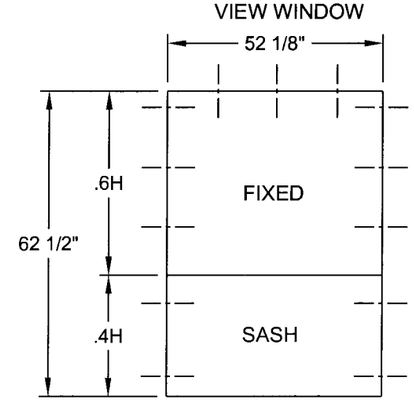

Approved as complying with the Florida Building Code
Date 01/08/2009
NOA# 08-0820.14
Miami Dade Product Control
Division
By Manuel Perez

12/18/08
Robert L. Clark, P.E.
PE #39712
Structural

Revsd By:	Date:	Revisions:	
D.G.	11/25/08	A	PER MIAMI-DADE LETTER DATED 10/31/08
D.G.	12/18/08	B	ADDED AND MODIFIED VIEW WINDOW EXAMPLES
Revsd By:	Date:	Revisions:	
Drawn By: D.G.	Date: 08/07/08	Checked By:	Date:

1070 TECHNOLOGY DRIVE
NOKOMIS, FL 34275

P.O. BOX 1529
NOKOMIS, FL 34274

PGT Visibly Better

Description: ANCHORAGE SPACING

Title: Vinyl Single Hung Window, Large Missile Impact

Series/Model:	Scale:	Sheet:	Drawing No.	Rev:
SH500	NTS	9 of 11	5191-1	B

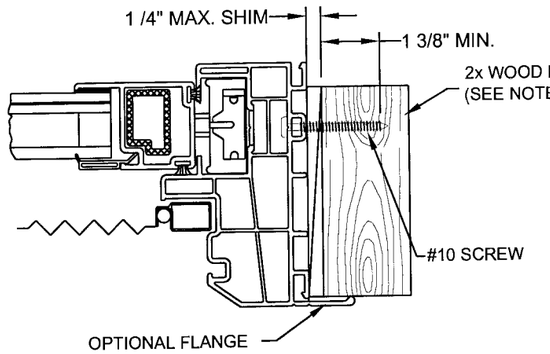

JAMB W/ BOX FRAME
THROUGH FRAME INTO 2x WOOD

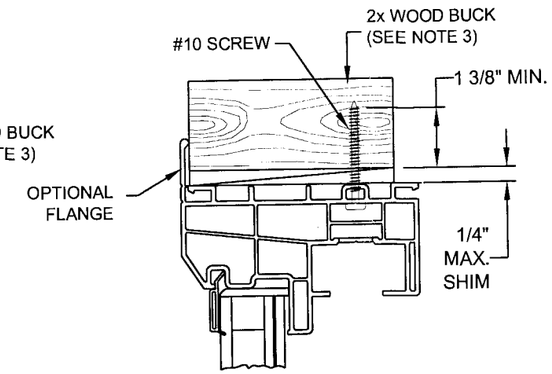

HEAD W/ BOX FRAME
THROUGH FRAME INTO 2x WOOD

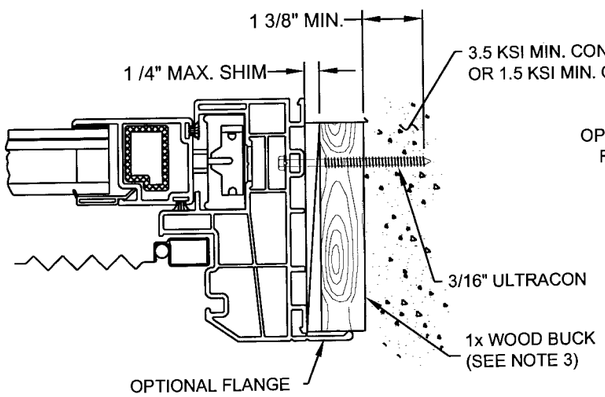

JAMB W/ BOX FRAME
THROUGH FRAME INTO CONCRETE
1x BUCK OPTIONAL

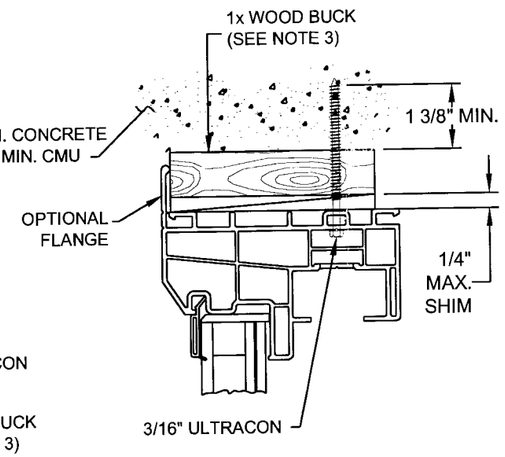

HEAD W/ BOX FRAME
THROUGH FRAME INTO CONCRETE
1x BUCK OPTIONAL

NOTES:

1. FOR CONCRETE APPLICATIONS IN MIAMI-DADE COUNTY, USE ONLY MIAMI-DADE COUNTY APPROVED 3/16" ULTRACON, EMBEDED 1 3/8" MIN., DISTANCE FROM ANCHOR TO CONCRETE EDGE IS 1" MINIMUM.
2. FOR WOOD APPLICATIONS IN MIAMI-DADE COUNTY, USE #10 STEEL SCREW, EMBEDED 1 3/8" MIN..
3. WOOD BUCKS DEPICTED IN THE SECTIONS ON THIS PAGE AS 1x ARE BUCKS WHOSE TOTAL THICKNESS IS LESS THAN 1 1/2". 1x WOOD BUCKS ARE OPTIONAL IF UNIT CAN BE INSTALLED DIRECTLY TO SOLID CONCRETE. WOOD BUCKS DEPICTED AS 2x ARE 1 1/2" THICK OR GREATER. INSTALLATION TO THE SUBSTRATE OF WOOD BUCKS TO BE ENGINEERED BY OTHERS OR AS APPROVED BY AUTHORITY HAVING JURISDICTION.
4. FOR ATTACHMENT TO ALUMINUM: THE MATERIAL SHALL BE A MINIMUM STRENGTH OF 6063-T5 AND A MINIMUM OF 1/8" THICK. THE ALUMINUM STRUCTURAL MEMBER SHALL BE OF A SIZE TO PROVIDE FULL SUPPORT TO THE WINDOW FRAME SIMILAR TO THAT SHOWN IN THESE DETAILS FOR 2x WOOD BUCKS. THE ANCHOR SHALL BE A #10 SHEET METAL SCREW WITH FULL ENGAGEMENT INTO THE ALUMINUM. IF THESE CRITERIA ARE MET, THE RESPECTIVE DESIGN PRESSURES AND ANCHORAGE SPACING FOR ULTRACONS MAY BE USED.

Approved as complying with the Florida Building Code
Date 01/08/2009
FDAR 08-0820.14
Miami Dade Product Control Division
By Manuel Perez

Revsd By:	Date:	Revisions:	
D.G.	11/25/08	A	PER MIAMI-DADE LETTER DATED 10/31/08
D.G.	12/18/08	B	NO CHANGE THIS SHEET
Revsd By:	Date:	Revisions:	
Drawn By: D.G.	Date: 08/07/08	Checked By:	Date: .G.

1070 TECHNOLOGY DRIVE
NOKOMIS, FL 34275

P.O. BOX 1529
NOKOMIS, FL 34274

PGT
Visibly Better

Description: ANCHORAGE DETAILS - BOX FRAME

Title: Vinyl Single Hung Window, Large Missile Impact

Series/Model:	Scale:	Sheet:	Drawing No.	Rev:
SH500	NTS	10 of 11	5191-1	B

12/18/08
Robert L. Clark, P.E.
PE #39712
Structural

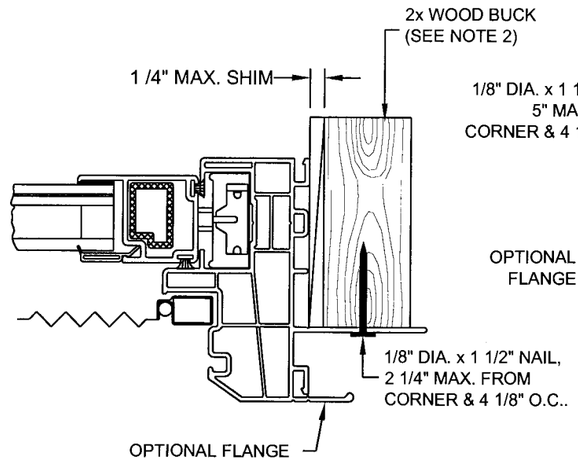

JAMB W/ NAIL FIN
THRU NAIL FIN INTO WOOD FRAMING

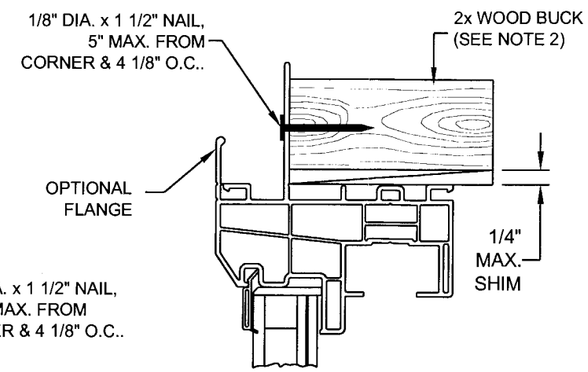

HEAD W/ NAIL FIN
THRU NAIL FIN INTO WOOD FRAMING

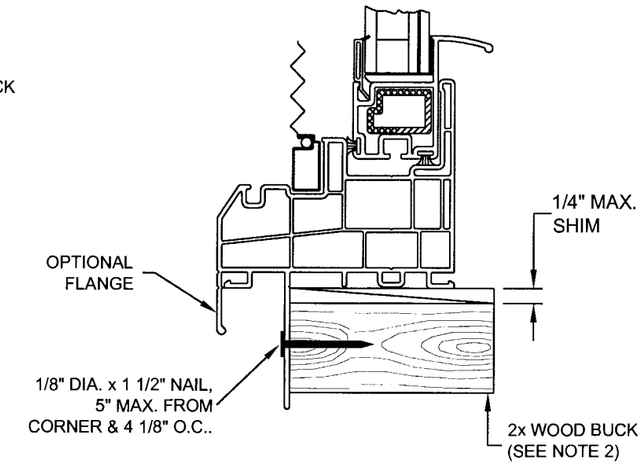

SILL W/ NAIL FIN
THRU NAIL FIN INTO WOOD FRAMING

NOTES:

1. FOR INTEGRAL FIN APPLICATIONS IN MIAMI-DADE COUNTY, USE 1/8" DIA. x 1 1/2" NAIL.
2. WOOD BUCKS DEPICTED IN THE SECTIONS ON THIS PAGE AS 1x ARE BUCKS WHOSE TOTAL THICKNESS IS LESS THAN 1 1/2". 1x WOOD BUCKS ARE OPTIONAL IF UNIT CAN BE INSTALLED DIRECTLY TO SOLID CONCRETE. WOOD BUCKS DEPICTED AS 2x ARE 1 1/2" THICK OR GREATER. INSTALLATION TO THE SUBSTRATE OF WOOD BUCKS TO BE ENGINEERED BY OTHERS OR AS APPROVED BY AUTHORITY HAVING JURISDICTION.
3. FOR ATTACHMENT TO ALUMINUM: THE MATERIAL SHALL BE A MINIMUM STRENGTH OF 6063-T5 AND A MINIMUM OF 1/8" THICK. THE ALUMINUM STRUCTURAL MEMBER SHALL BE OF A SIZE TO PROVIDE FULL SUPPORT TO THE WINDOW FRAME SIMILAR TO THAT SHOWN IN THESE DETAILS FOR 2x WOOD BUCKS. THE ANCHOR SHALL BE A #10 SHEET METAL SCREW WITH FULL ENGAGEMENT INTO THE ALUMINUM. IF THESE CRITERIA ARE MET, THE RESPECTIVE DESIGN PRESSURES AND ANCHORAGE SPACING FOR ULTRACONS MAY BE USED.

Approved as complying with the Florida Building Code
Date 01/08/2009
NOA# 08-0820.14
Miami-Dade Product Control Division
By Manuel Perez

Revsd By:	Date:	Revisions:	
D.G.	11/25/08	A	PER MIAMI-DADE LETTER DATED 10/31/08
D.G.	12/18/08	B	NO CHANGE THIS SHEET
Drawn By: D.G.	Date: 08/07/08	Checked By:	Date:

1070 TECHNOLOGY DRIVE
NOKOMIS, FL 34275

P.O. BOX 1529
NOKOMIS, FL 34274

PGT
Visibly Better

Description: ANCHORAGE DETAILS - Integral Fin Frame

Title: Vinyl Single Hung Window, Large Missile Impact

Series/Model:	Scale:	Sheet:	Drawing No.	Rev:
SH500	NTS	11 of 11	5191-1	B

12/18/08
Robert L. Clark, P.E.
PE #39712
Structural