MIAMI-DADE COUNTY
BUILDING CODE COMPLIANCE OFFICE (BCCO)
PRODUCT CONTROL DIVISION

MIAMI-DADE COUNTY, FLORIDA
METRO-DADE FLAGLER BUILDING

140 WEST FLAGLER STREET, SUITE 1603
MIAMI, FLORIDA 33130-1563
(305) 375-2901 FAX (305) 375-2908
www.miamidade.gov

NOTICE OF ACCEPTANCE (NOA)

Temtrol, Inc.
15 East Oklahoma Avenue
Okarche, OK 73762

SCOPE:
This NOA is being issued under the applicable rules and regulations governing the use of construction materials. The documentation submitted has been reviewed by Miami-Dade County Product Control Division and accepted by the Board of Rules and Appeals (BORA) to be used in Miami Dade County and other areas where allowed by the Authority Having Jurisdiction (AHJ).

This NOA shall not be valid after the expiration date stated below. The Miami-Dade County Product Control Division (In Miami Dade County) and/or the AHJ (in areas other than Miami Dade County) reserve the right to have this product or material tested for quality assurance purposes. If this product or material fails to perform in the accepted manner, the manufacturer will incur the expense of such testing and the AHJ may immediately revoke, modify, or suspend the use of such product or material within their jurisdiction. BORA reserves the right to revoke this acceptance, if it is determined by Miami-Dade County Product Control Division that this product or material fails to meet the requirements of the applicable building code.

This product is approved as described herein, and has been designed to comply with the High Velocity Hurricane Zone of the Florida Building Code.

DESCRIPTION: **Temtrol Series "ITF" Air Handler Units**

APPROVAL DOCUMENT: Drawing titled " Temtrol Series "ITF" Air Handler Unit ", sheets 1 through 6 of 6, prepared by Temtrol, Inc., dated March 10, 2009, signed and sealed by Robert A. Walz, P.E., on March 23, 2009, bearing the Miami-Dade County Product Control Approval stamp with the Notice of Acceptance number and the expiration date by the Miami-Dade County Product Control Division.

MISSILE IMPACT RATING: **Large and Small Missile Impact**

LABELING: Each panel shall bear a permanent label with the manufacturer's name or logo, city, state and the following statement: "Miami-Dade County Product Control Approved", unless otherwise noted herein.

RENEWAL of this NOA shall be considered after a renewal application has been filed and there has been no change in the applicable building code negatively affecting the performance of this product.

TERMINATION of this NOA will occur after the expiration date or if there has been a revision or change in the materials, use, and/or manufacture of the product or process. Misuse of this NOA as an endorsement of any product, for sales, advertising or any other purposes shall automatically terminate this NOA. Failure to comply with any section of this NOA shall be cause for termination and removal of NOA.

ADVERTISEMENT: The NOA number preceded by the words Miami-Dade County, Florida, and followed by the expiration date may be displayed in advertising literature. If any portion of the NOA is displayed, then it shall be done in its entirety.

INSPECTION: A copy of this entire NOA shall be provided to the user by the manufacturer or its distributors and shall be available for inspection at the job site at the request of the Building Official.

This NOA consists of this page 1, evidence submitted page E-1 as well as approval document mentioned above. The submitted documentation was reviewed by **Helmy A. Makar, P.E., M.S.**

MIAMI-DADE COUNTY APPROVED

Helmy A. Makar
04/15/09

NOA No. 08-0822.20
Expiration Date: 04/15/2014
Approval Date: 04/15/2009

Temtrol, Inc.

NOTICE OF ACCEPTANCE: EVIDENCE SUBMITTED

A. DRAWINGS:

1. *Drawing titled " Temtrol Series "ITF" Air Handler Unit ", sheets 1 through 6 of 6, prepared by Temtrol, Inc., dated March 10, 2009, signed and sealed by Robert A. Walz, P.E., on March 23, 2009.*

B. TESTS:

1. *Test report on Large Missile Impact Test, Cyclic Wind Pressure Test and Uniform Static Air Pressure Test of Temtrol Series ITF Air Handler Unit, prepared by Architectural Testing, Report No. 75786.01-801-18, dated 07/28/2008, signed and sealed by Joseph A. Reed, P.E.*

C. CALCULATIONS:

1. *Panel and fasteners analysis prepared by Walz Engineering, LLC, dated December 10, 2008, signed and sealed by Robert A. Walz, P.E.*

D. QUALITY ASSURANCE

1. *By Miami-Dade County Building Code Compliance Office.*

E. MATERIAL CERTIFICATIONS

1. *Tensile Test Report No. 75786.01-801-18, dated 07/28/2008, signed and sealed by Joseph A. Reed, P.E.*

Helmy A. Makar, P.E., M.S.
Senior Product Control Examiner
NOA No. 08-0822.20
Expiration Date: 04/15/2014
Approval Date: 04/15/2009

Approved as complying with the
Florida Buiding Code
Date 04/15/2009
NOA# 08-0822.20
Miami Dade Product Control
Division
By

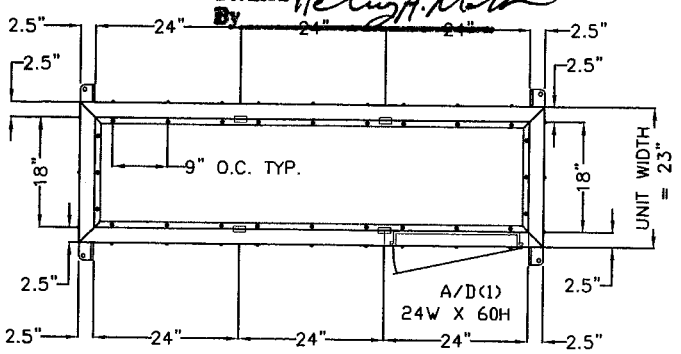

PLAN VIEW

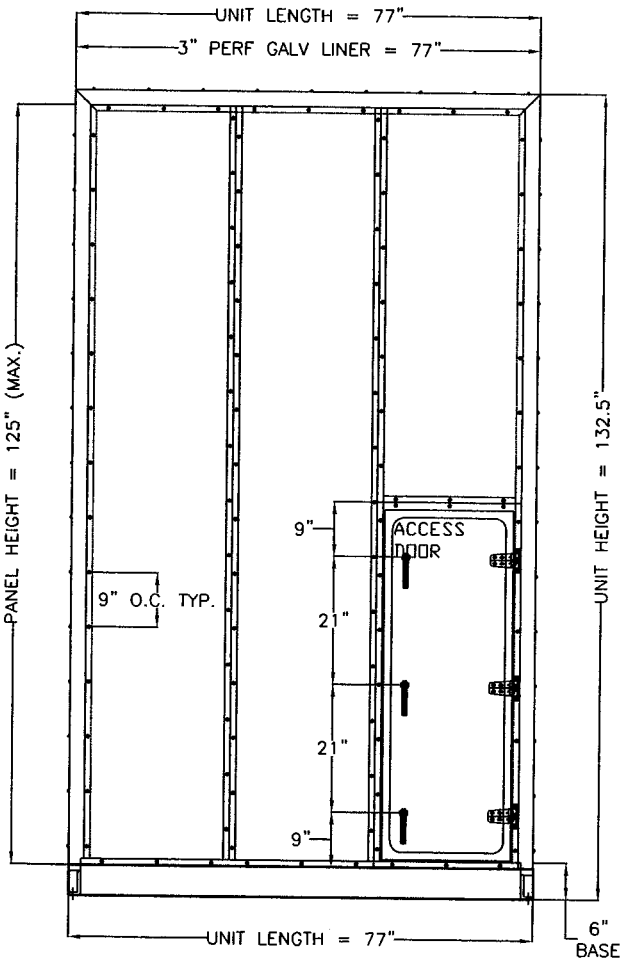

RIGHT ELEVATION

APPROVED MAX. SIZES FOR PANELS	
EXTERIOR LINER 0.0635"(min.) G-90 Galv. 24"x125" 18"x125" 24"x65" (Above Door)	INTERIOR LINER 0.0396" (min.) G-90 Galv. (See Note #2 Sht. 2 of 4) 24"x125" 18"x125" 24"x65" (Above Door)

FASTENERS

Panels secured to the Tubular Steel Frame with 1/4" Hex Head, PK Kote, Fasteners and Neoprene Washers self-Tapping 9.0" O.C. (MAX.)

UNIT BASE

Fully Welded 0.123" (min.) Thick Structural Steel Tubing with intermediate 0.0747" (min.) Thick C-Channel Cross Supports at 24" O.C. (See Notes Sht. 4 of 4)

UNIT FLOORS

Inner walk on Floor is 0.0635"(min.) G-90 Galv. Steel
Outer Floor is 0.0396"(min.) G-90 Galv. Steel

UNIT FRAMEWORK

0.0635"(min.) Tubular Steel Framework @ 24" O.C. (MAX.)

ACCESS DOOR (21" x 57")

0.0635"(min.) G-90 Galv. (Outer)
0.0396"(min.) G-90 Galv. (Inner)
Allegis / Ventlock Handles Heavy-Duty Hinges by Temtrol (ZINC PLATED)

WEATHERSTRIPPING

1 Row Rubber Bulb Gasket Full Perimeter Of Inner Door Fram. 1 Row Closed-Cell EPDM Gasket, $\frac{1}{2}$" x $\frac{3}{8}$" Full Perimeter Of Door Panel.

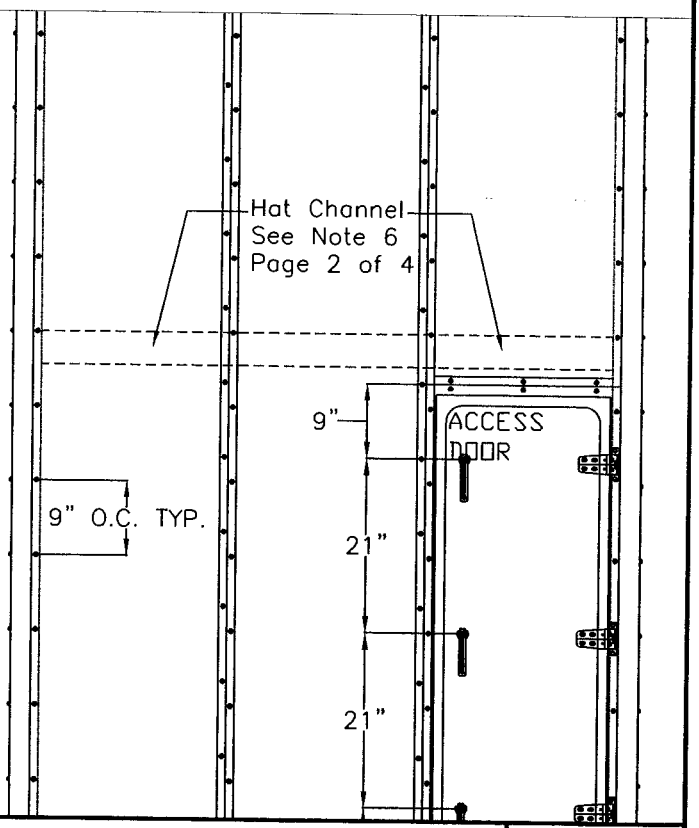

Temtrol
www.temtrol.com
15 EAST OKLAHOMA AVENUE OKARCHE, OK.73762
PH: (405) 263-7286 FAX: (405) 263-4924

TEMRTOL SERIES "ITF" AIR HANDLING UNIT	3-10-09
PANEL ASSEMBLY	1 OF 6

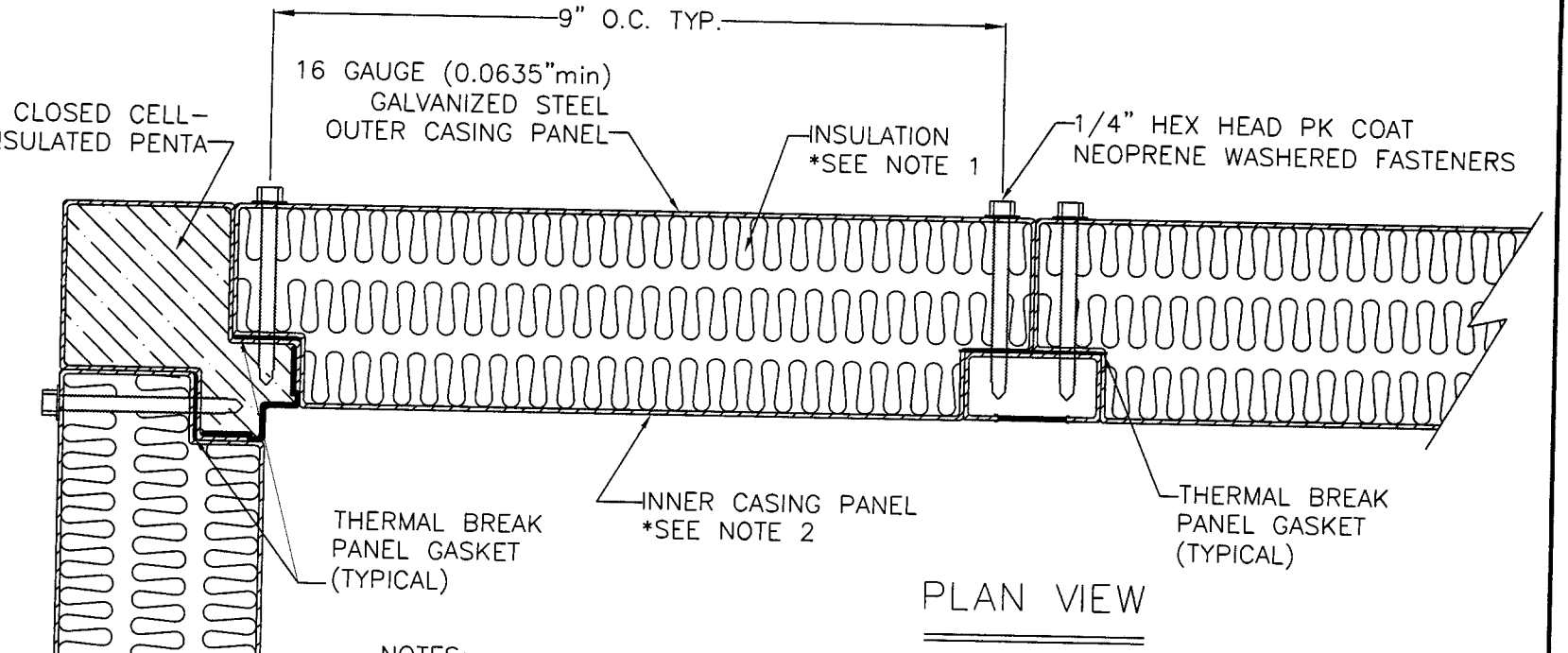

PLAN VIEW

NOTES:

1. Doublewall thickness to be 3 inches. The semi-rigid blanket-type fiberglass insulation has thermal and acoustical properties that meet or exceed a 3 pound density rating. The dual-density material meets the erosion requirements of UL 181 facing the airstream and Fire Hazard Classification of 25/50 (per ASTM E 84 UL 723).

2. Standard INNER casing panels are solid 20 ga. 0.0396" (min.) G-90 GALVANIZED STEEL which may be used in any combination as may be required throughout the air handling unit casing.

3. For maximum Roof/Floor & Wall panel sizes and details, (See Sht. 1 of 4).

4. Maximum Wall panel's design pressure = +65/-65 PSF

5. Maximum Roof/Floor panel's design pressure = +48.75/-48.75 PSF

6. The wall are stiffened full perimeter on the interior with 4 $-\frac{1}{4}$"x3" HAT CHANNELS located 62" above the floor. They are attached with $\frac{1}{4}$" hex head screws with integral neoprene washers and joined at the corners with 1"x1" steel angles and 4 screws.

Approved as complying with the Florida Building Code
Date 04/15/2009
NOA# 08-0822.20
Miami Dade Product Control Division
By

Temtrol
WWW.temtrol.com
15 EAST OKLAHOMA AVENUE OKARCHE, OK.73762
PH: (405) 263-7288 FAX: (405) 263-4924

TEMRTOL SERIES "ITF" AIR HANDLING UNIT

PANEL/TUBULAR CONSTRUCTION

3-10-09

Temtrol
www.temtrol.com
15 EAST OKLAHOMA AVENUE OKMULGEE, OK 73762
PH: (405) 263-7286 FAX: (405) 263-4924

TEMRTOL SERIES "ITF" AIR HANDLING UNIT

BASE CONSTRUCTION

3-10-09

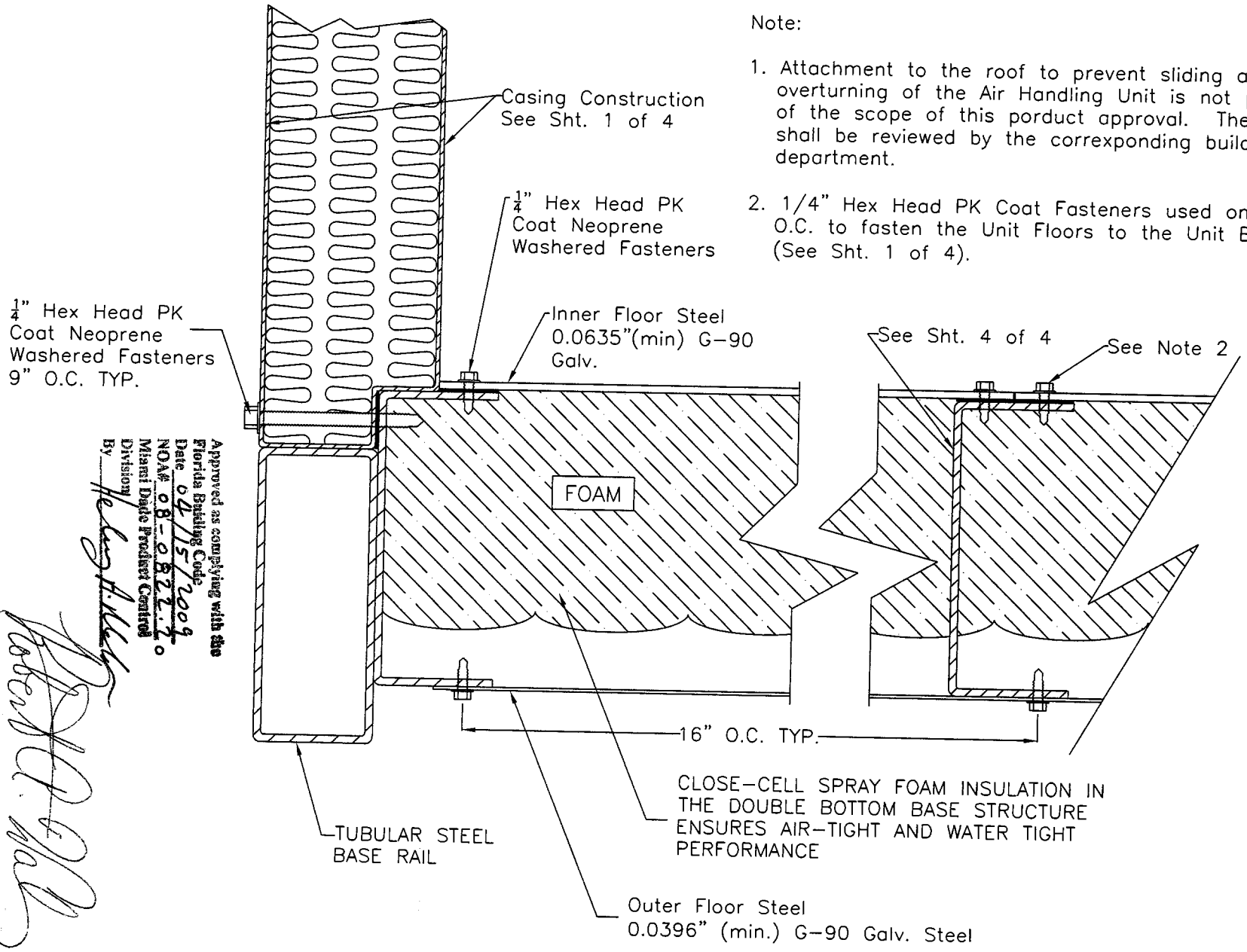

Note:

1. Attachment to the roof to prevent sliding and overturning of the Air Handling Unit is not part of the scope of this porduct approval. They shall be reviewed by the correxponding building department.
2. 1/4" Hex Head PK Coat Fasteners used on 9" O.C. to fasten the Unit Floors to the Unit Base (See Sht. 1 of 4).

Approved as complying with the
Florida Building Code
Date 04/15/2009
NOA# 08-0822.10
Miami Dade Product Control
Division
By

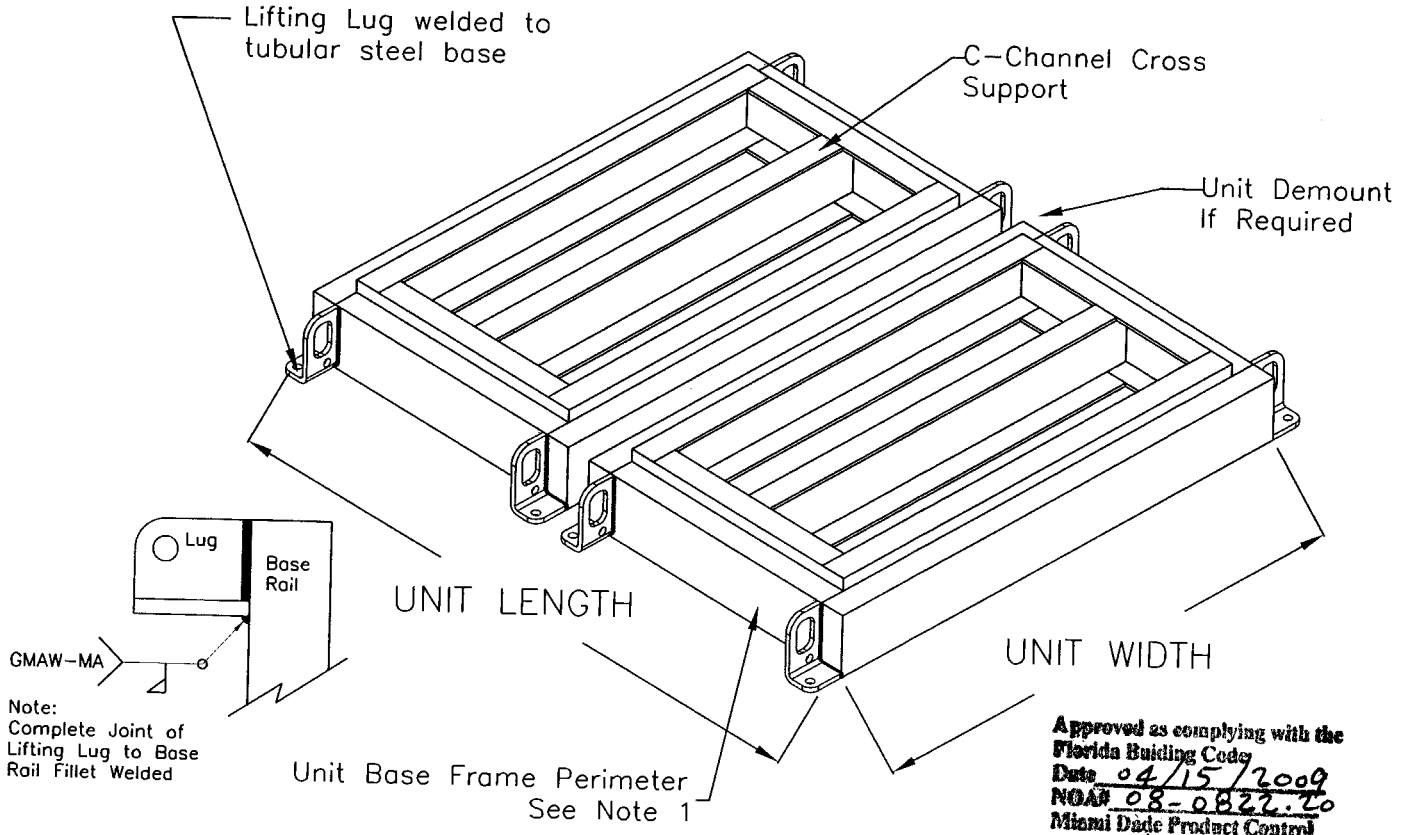

Approved as complying with the Florida Building Code
Date 04/15/2009
NOA# 08-0822.20
Miami Dade Product Control Division
By

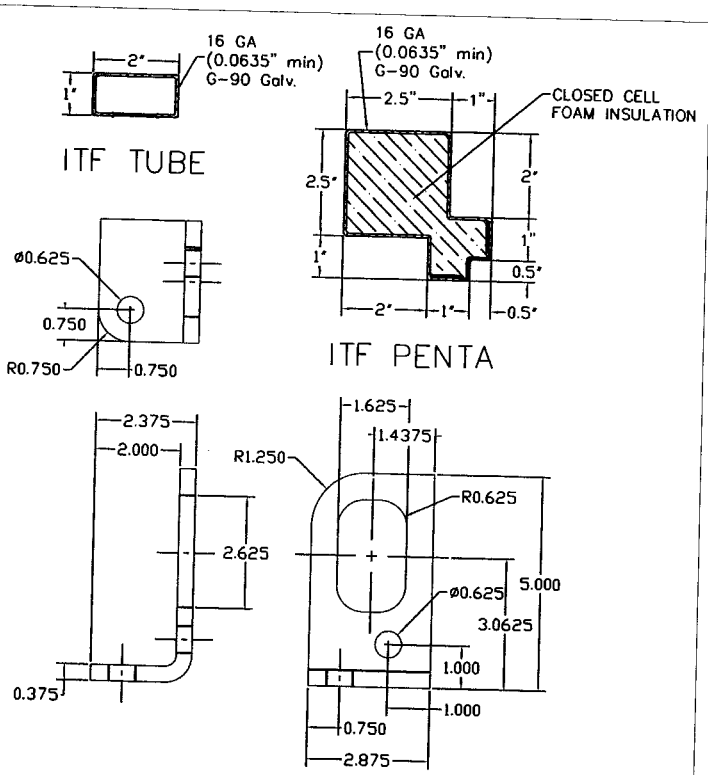

Notes:

1. All joints of structural members are continuously arc welded.
2. Unit Base as shown is completely primed and painted prior floor panel attachment.
3. The unit base frame perimeter is fully welded 0.125"(min.) thickness structural steel tubing and fitted with C-Channel cross support members on 24" O.C. (max.).
4. Air Handling Unit size can vary, but spacing of Tubular Steel Framework not to exceed maximum Roof/Floor and Wall panel width as shown on Sheet 1 of 4.
5. Design and Size of tubular steel framework/base rail will vary and their structural adequacy as well as that of the support and attachment to the roof are not part of the scope of this approval. This shall be reviewed by the corresponding building departments.
6. ASTM E8-03
   Test Method: The test specimens were evoluated in accordance with ASTM E8-03, Standard Test Methods for Tensile Testin of Metallic Materials. The test specimens were machined and sized in compliance with section 6.0 of the standard. The specimens were tested using a Satec 50UD Universol Machine with o cross head speed of 0.2 in/min.
7. Galvanized Steel Conforms to ASTM A-653. Grade: Commercial Steel Type B. Tubular Steel Conforms to ASTM A-500. Structural Tubing Grade B.

Temtrol
www.temtrol.com
15 EAST OKLAHOMA AVENUE OKARCHE, OK.73762
PH: (405) 263-7286 FAX: (405) 263-4924

Temtrol	TEMRTOL SERIES "ITF" AIR HANDLING UNIT	3-10-09
	BASE CONSTRUCTION	4 OF 6

AVAILABLE OPTIONS:

1.)Tool operated or key operated safety latch furnished on the fan section access door. The latch complies with title 8 CAL-OSHA, ETL and the mechanical protection requirements of UL 1995.

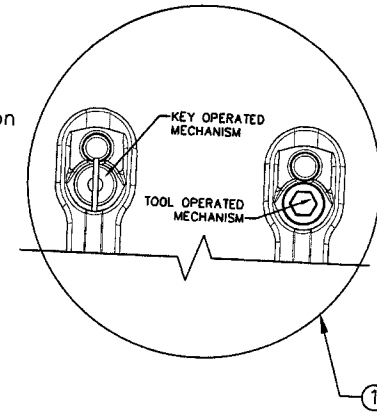

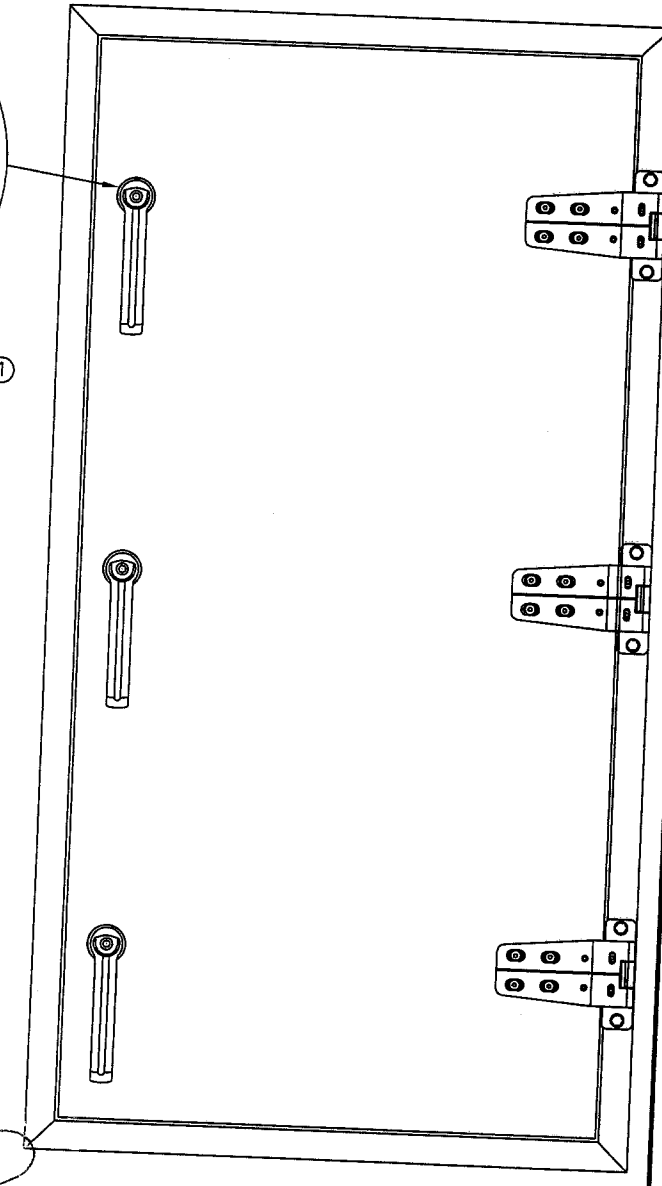

Approved as complying with the Florida Building Code
Date 04/15/2009
NOA# 08-0822.20
Miami Dade Product Control Division
By

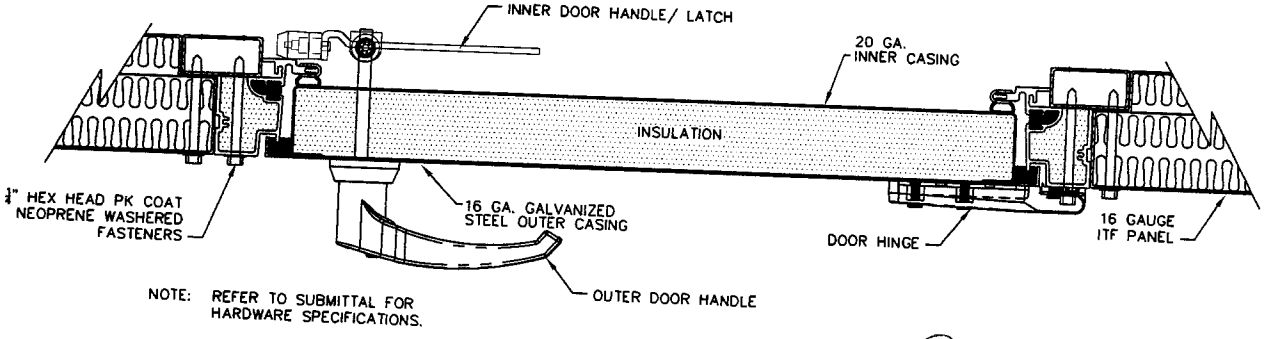

NOTE: REFER TO SUBMITTAL FOR HARDWARE SPECIFICATIONS.

Temtrol
www.temtrol.com
15 EAST OKLAHOMA AVENUE OKARCHE, OK.73762
PH: (405) 263-7286 FAX: (405) 263-4924

ITF ACCESS DOOR DETAIL

File Name: ITF Door Detail.dwg

Date: 3-10-09

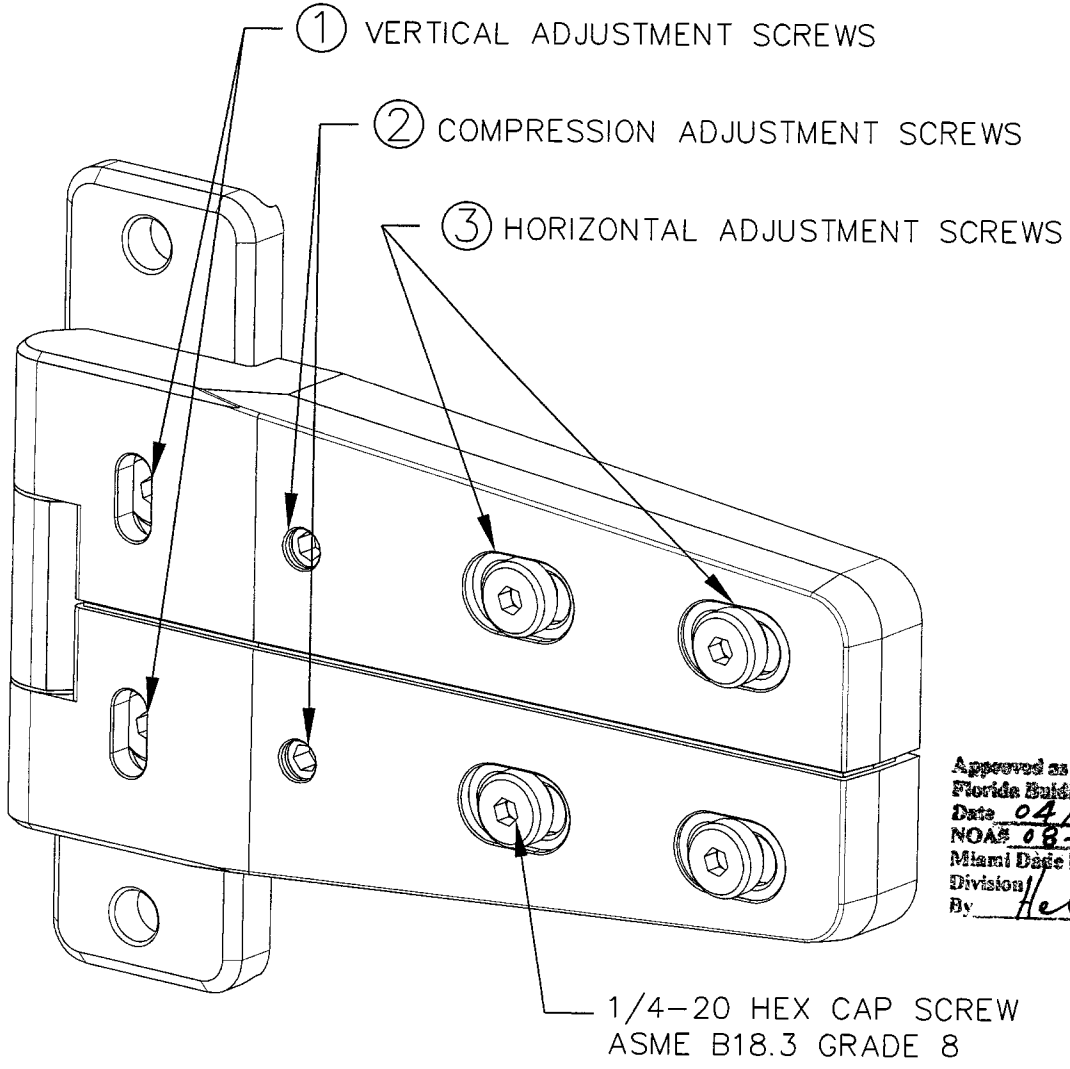

ADJUSTMENT INSTRUCTIONS

(ALL ADJUSTMENTS TO BE MADE WITH 1/8" ALLEN WRENCH)

1. VERTICAL ADJUSTMENT:
   - A. LOOSEN VERTICAL ADJUSTMENT SCREWS ON TOP AND BOTTOM HINGES.
   - B. RAISE OR LOWER DOOR ACCORDINGLY.
   - C. TIGHTEN VERTICAL ADJUSTMENT SCREWS ON TOP AND BOTTOM HINGES.
2. COMPRESSION ADJUSTMENT:
   - A. ADJUST THE TWO COMPRESSION ADJUSTMENT SCREWS ON BOTH THE TOP AND BOTTOM HINGES BY TURNING THEM TO ACHIEVE THE DESIRED COMPRESSION OF THE DOOR AGAINST THE SEAL.
3. HORIZONTAL ADJUSTMENT:
   - A. LOOSEN FOUR HORIZONTAL ADJUSTMENT SCREWS ON TOP HINGE, AND FOUR HORIZONTAL ADJUSTMENT SCREWS ON BOTTOM HINGE.
   - B. MOVE DOOR LEFT OR RIGHT ACCORDINGLY.
   - C. TIGHTEN THE EIGHT HORIZONTAL ADJUSTMENT SCREWS ON TOP AND BOTTOM HINGES.

Approved as complying with the Florida Building Code
Date 04/15/2009
NOA# 08-0822.20
Miami Dade Product Control Division
By Helen A. Mel[illegible]

Robert A. Wal[illegible]

Temtrol
www.temtrol.com
15 EAST OKLAHOMA AVENUE OKARCHE, OK.73762
PH: (405) 263-7286 FAX: (405) 263-4924

ALLEGIS HINGE ADJUSTMENT INSTRUCTIONS

File Name: ALLEGIS HINGE INSTR.dwg
Date: 3-10-09