MIAMI-DADE COUNTY
BUILDING CODE COMPLIANCE OFFICE (BCCO)
PRODUCT CONTROL DIVISION

MIAMI-DADE COUNTY, FLORIDA
METRO-DADE FLAGLER BUILDING
140 WEST FLAGLER STREET, SUITE 1603
MIAMI, FLORIDA 33130-1563
(305) 375-2901 FAX (305) 372-6339
www.maimidade.gov/buildingcode

NOTICE OF ACCEPTANCE (NOA)

Nu-Vue Industries, Inc.
1055 E. 29 Street
Hialeah, Florida 33013

SCOPE:

This NOA is being issued under the applicable rules and regulations governing the use of construction materials. The documentation submitted has been reviewed by Miami-Dade County Product Control Division and accepted by the Board of Rules and Appeals (BORA) to be used in Miami Dade County and other areas where allowed by the Authority Having Jurisdiction (AHJ).

This NOA shall not be valid after the expiration date stated below. The Miami-Dade County Product Control Division (In Miami Dade County) and/or the AHJ (in areas other than Miami Dade County) reserve the right to have this product or material tested for quality assurance purposes. If this product or material fails to perform in the accepted manner, the manufacturer will incur the expense of such testing and the AHJ may immediately revoke, modify, or suspend the use of such product or material within their jurisdiction. BORA reserves the right to revoke this acceptance, if it is determined by Miami-Dade County Product Control Division that this product or material fails to meet the requirements of the applicable building code.

This product is approved as described herein, and has been designed to comply with the Florida Building Code, including the High Velocity Hurricane Zone.

DESCRIPTION: Series NVJH, NVTP/H, NVSO and NVHC Wood Connectors.

APPROVAL DOCUMENT: Drawing No. **NU-3**, titled "NVJH Joist Supports, NVTP & NVTPH Plate Anchors, NVSO 236 Joist Hanger, NVHC 43 & NVHC 43/2 Hurricane Clip", sheets 1 through 3 of 3, dated 07/10/03, with last revision # 3 dated 04/27/05, prepared by Nu-Vue Industries, Inc., signed and sealed by Vipin N. Tolat, P.E., bearing the Miami-Dade County Product Control renewal stamp with the Notice of Acceptance number and expiration date by the Miami-Dade County Product Control Division.

MISSILE IMPACT RATING: None

LABELING: Each unit shall bear a permanent label with the manufacturer's name or logo, city, state and following statement: "Miami-Dade County Product Control Approved", unless otherwise noted herein.

RENEWAL of this NOA shall be considered after a renewal application has been filed and there has been no change in the applicable building code negatively affecting the performance of this product.

TERMINATION of this NOA will occur after the expiration date or if there has been a revision or change in the materials, use, and/or manufacture of the product or process. Misuse of this NOA as an endorsement of any product, for sales, advertising or any other purposes shall automatically terminate this NOA. Failure to comply with any section of this NOA shall be cause for termination and removal of NOA.

ADVERTISEMENT: The NOA number preceded by the words Miami-Dade County, Florida, and followed by the expiration date may be displayed in advertising literature. If any portion of the NOA is displayed, then it shall be done in its entirety.

INSPECTION: A copy of this entire NOA shall be provided to the user by the manufacturer or its distributors and shall be available for inspection at the job site at the request of the Building Official.

This NOA **renews NOA # 05-0516.01** and consists of this page 1 and evidence page E-1, as well as approval document mentioned above.

The submitted documentation was reviewed by **Carlos M. Utrera, P.E.**

MIAMI-DADE COUNTY APPROVED

10/2/08

NOA No. 08-0828.02
Expiration Date: January 1, 2014
Approval Date: October 23, 2008

NOTICE OF ACCEPTANCE: EVIDENCE SUBMITTED

A. DRAWINGS

1. Drawing No. **NU-3**, titled "NVJH Joist Supports, NVTP & NVTPH Plate Anchors, NVSO 236 Joist Hanger, NVHC 43 & NVHC 43/2 Hurricane Clip", sheets 1 through 3 of 3, dated 07/10/03, with last revision # 3 dated 04/27/05, prepared by Nu-Vue Industries, Inc., signed and sealed by Vipin N. Tolat, P.E.
   "Submitted under NOA # 05-0516.01"

B. TESTS

Test reports on wood connectors per ASTM D1761 by Product Testing, Inc., signed and sealed by C. R. Caudel, P.E.

	Report No.	Wood Connector	Direction	Date
1.	PT # 03-4303	NVTP4	Upward	04/21/03
2.	PT # 03-4343	NVTP4H	Upward	05/05/03
3.	PT # 03-4344	NVTP4	Upward	05/01/03
4.	PT # 03-4345	NVTP4H	Upward	05/02/03
5.	PT # 03-4349	NVSO236	Up & Down	05/19/03
6.	PT # 03-4357	NVSO236	Up & Down	05/20/03
7.	PT # 03-4358	NVJH24	Up & Down	05/30/03
8.	PT # 03-4385	NVJH26	Up & Down	05/30/03
9.	PT # 03-4386	NVSO236	Up & Down	05/13/03
10.	PT # 03-4387	NVJH28	Up & Down	05/30/03

"Submitted under NOA # 03-0730.03"

C. CALCULATIONS

1. Report of Design Capacities, dated 07/22/03, sheets 1 through 13 of 13, prepared, signed and sealed by Vipin N. Tolat, P.E.
   "Submitted under NOA # 03-0730.03"
2. Report of Design Capacities, dated 0713/05, sheets 1 through 5 of 5, prepared, signed and sealed by Vipin N. Tolat, P.E.
   "Submitted under NOA # 05-0516.01"

D. QUALITY ASSURANCE

1. Miami Dade Building Code Compliance Office (BCCO).

10/2/08

Carlos M. Utrera, P.E.
Product Control Examiner
NOA No. 08-0828.02
Expiration Date: January 1, 2014
Approval Date: October 23, 2008

NOTICE OF ACCEPTANCE: EVIDENCE SUBMITTED

E. MATERIAL CERTIFICATIONS

1. None.

F. STATEMENT

1. Statement letter of code conformance, no financial interest and no change of product, dated 08/21/08, issued, signed and sealed by Vipin N. Tolat, P.E.

G. OTHER

1. Notice of Acceptance No. **05-0516.01**, issued to Nu-Vue Industries, Inc., approved on 09/29/05 and expiring on 01/01/09.

10/2/08

Carlos M. Utrera, P.E.
Product Control Examiner
NOA No. 08-0828.02
Expiration Date: January 1, 2014
Approval Date: October 23, 2008

TABLE 1

JOIST SUPPORTS

18 G NVJH JOIST SUPPORTS										Allowable Loads (lbs)		
Product Code	Dimension (inches)			Joist Size	Double Header Size	Single Header Size	Fasteners			Gravity Loads		Uplift Loads
	W	H	BS				Double Header	Single Header	Joists	Double Header	Single Header	Single & Double Headers
NVJH24	1 5/8	3 5/8	3	2x4 2x6	2–2x4 2–2x6	2x4 2x6	6–10d	6–10d x 1½"	4–10d x 1½"	744	744	—
NVJH26	1 5/8	5	3	2x6 2x8	2–2x6 2–2x8	2x6 2x8	10–10d	10–10d x 1½"	6–10d x 1½"	1240	1240	821
NVJH28	1 5/8	6 3/4	3	2x8 2x10 2x12	2–2x8 2–2x10 2–2x12	2x8 2x10 2x12	14–10d	14–10d x 1½"	7–10d x 1½"	1736	1736	1079

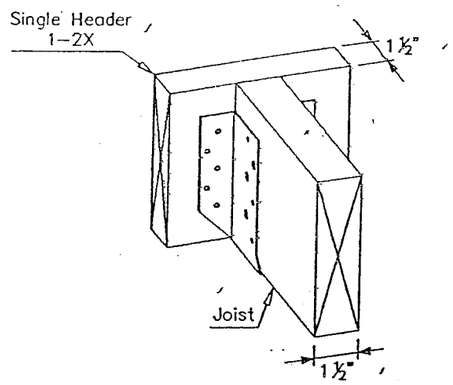

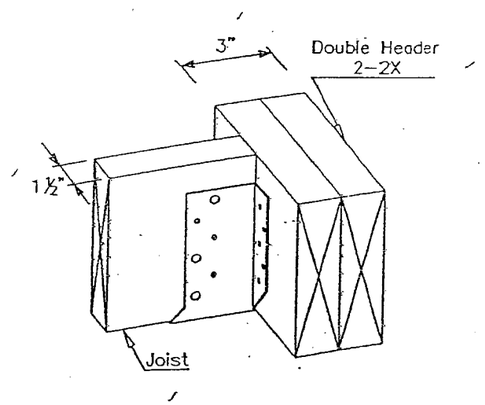

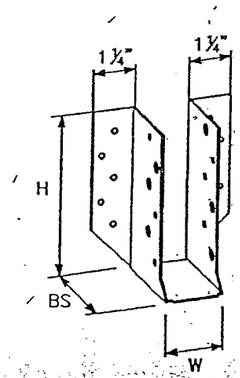

NVJH 26 as shown
NVJH 24 & 28
similar but with
different holes.

General Notes:

1. Steel shall conform to ASTM A653, structural grade 33 (Min. yield 33 ksi) and a minimum galvanized coating of G 60 per ASTM A525.

2. Allowable loads are based on National Desing specifications (NDS) for wood construction, 2001/2005 Edition. and Florida Building Code 2006/2007

3. Design loads are for Southern Pine species with a specific gravity of 0.55. Allowable loads for other species shall be adjusted accordingly.

4. Nail values are based on NDS table 11P, G=0.55 and have been reduced for Penetration Depth factor.

5. Allowable loads for wind uplift and lateral loads have already been increased by a duration factor of 60% for anchor nail. No increase is allowed for steel stress.

6. Allowable loads for more than a single connetion cannot be added together. A design load which be divided into components in the direction given must be evaluated as follows:

$$\frac{\text{Actual Uplift}}{\text{Allowable Uplift}} + \frac{\text{Actual L1}}{\text{Allowable L1}} + \frac{\text{Actual L2}}{\text{Allowable L2}} <= 1.0$$

7. Allowable loads are base on 1 ½" thick wood members unless otherwise noted.

8. All tests have been conducted in accordance with ASTM D–1761.

VIPIN N. TOLAT, PE (CIVIL)
FL. REG. # 12847
15123 LANTER CREEK LANE
HOUSTON, TX 77068

8/28/05
8/21/08

PRODUCT REVIEWED
as complying with the Florida Building Code
Acceptance No 02-0228.02
Expiration Date 01/01/2014
By
Miami Dade Product Control Division

PRODUCT REVISED
as complying with the Florida Building Code
Acceptance No 05-0516.01
Expiration Date 01/01/09
By
Miami Dade Product Control Division

Nu-Vue Industries, Inc.
1053–1059 East 29 Street
Hialeah, Florida 33013
(305) 694–0397
FAX: (305) 694–0398

NVJH JOIST SUPPORTS

DWG #:	Sheet:	Date:	Revisions:
NU-3	1 of 3	JULY 10, 2003	(1) 11/10/03 (2) 12/11/03 (3) 04/27/05

TABLE 2

TOP PLATE ANCHORS
NVTP & NVTPH

Size	Product Code	Gauge	Dimensions (in)	
			A	B
2x4/4x4	NVTP4	20	3 5/8"	8"
2x6/4x6	NVTP6	20	5 5/8"	8"
2x8/4x8	NVTP8	20	7 3/8"	8"
2x4/4x4	NVTP4H	18	3 5/8"	8"
2x6/4x6	NVTP6H	18	5 5/8"	8"
2x8/4x8	NVTP8H	18	7 3/8"	8"

Product code	Total number of fasteners 10d x 1 ½" Wind FORCES Max. Uplift Capacity (lbs)			
	6	8	10	12
NVTP 4,6,8	828	1087	1346	1605
NVTP 4H,6H,8H	938	1207	1476	1745

Notes:

1. See General Notes, Sheet 1.
2. One half of all specified fasteners shall be used on each side of the stud to achieve tabulated values.

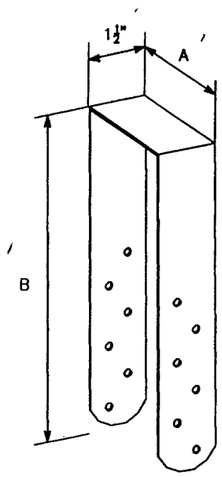

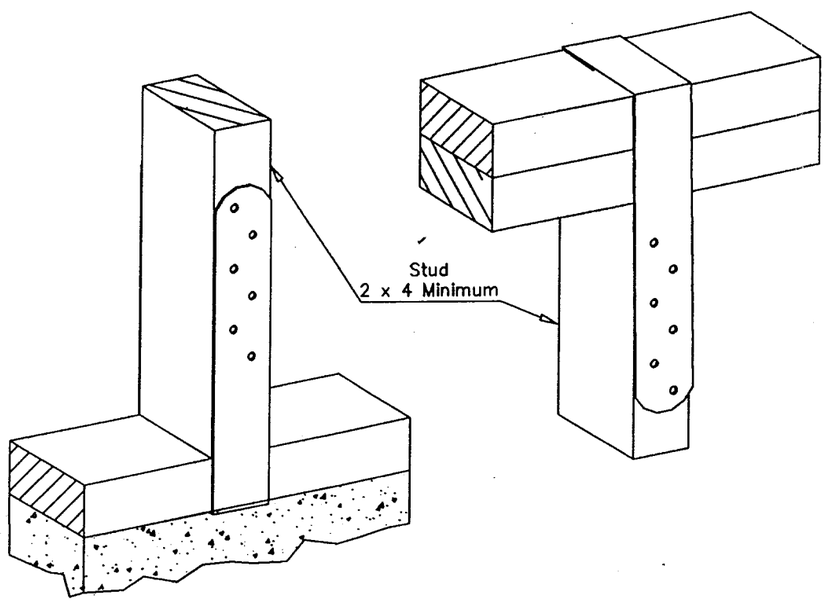

TABLE 3

NVSO 236, 16 GAUGE, HEAVY DUTY
FACE MOUNT JOIST HANGER

Joist Size	Header Size	Fasteners		Allowable Loads (Lbs.)	
		Header	Joist	GRAVITY	Uplift
2x6-8	2-2x8 2-2x10 2-2x12	14-10d	6-10d	1758	1108
		14-16d	6-16d	1875	1279
		4-⅜" x 3" Leg Screws	6-16d	800	1217

Notes:

1. See General Notes, Sheet 1.

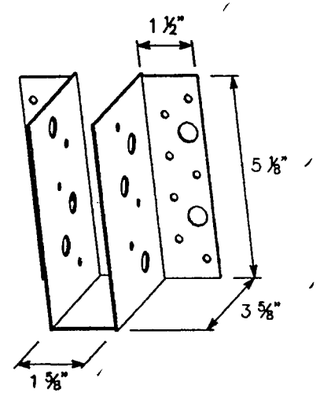

BOLT HOLES 1/2" DIA.
NAIL HOLE 3/16" DIA.

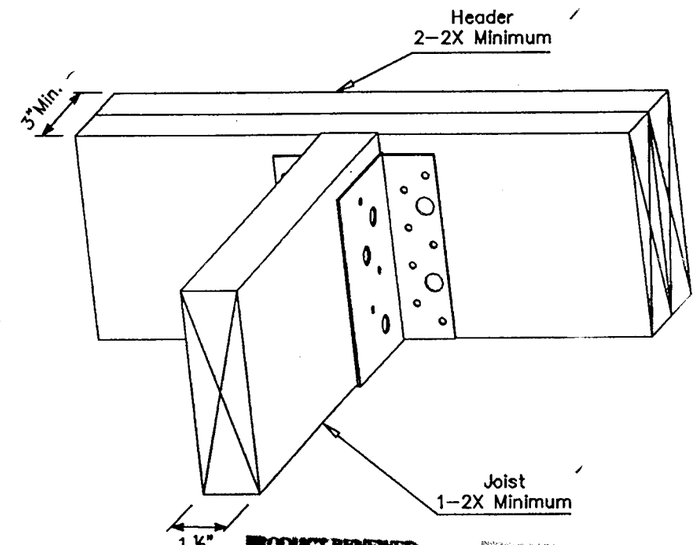

PRODUCT RENEWED
complying with the Florida Building Code
Acceptance No. 08-0828.02
Expiration Date 01/01/2014
By
Miami Dade Product Control Division

PRODUCT REVISED
complying with the Florida Building Code
Acceptance No. 05-0516.01
Expiration Date 01/01/09
By
Miami Dade Product Control Division

VIPIN N. TOLAT, PE (CIVIL)
FL. REG. # 12847
15123 LANTER CREEK LANE
HOUSTON, TX 77068

8/28/05

Nu-Vue Industries, Inc.
1053-1059 East 29 Street
Hialeah, Florida 33013
(305) 694-0397
FAX: (305) 694-0398

NVTP & NVTPH PLATE ANCHORS, NVSO 236 JOIST HANGER

DWG #:	Sheet:	Date:	Revisions:
NU-3	2 of 3	JULY 10, 2003	(1) 11/10/03 (2) 12/11/03 (3) 04/27/05

TABLE 4

18 Gauge NVHC 43 & NVHC 43/2 HURRICANE CLIP.

PRODUCT CODE	DESCRIPTION	FASTENERS		DESIGN LOADS (LBS)		
		HEADER	JOIST	UPLIFT	L1	L2
NVHC 43	Hurricane Clip – Wide	9–10d	9–10d	687*	407	308
NVHC 43/2	Hurricane Clip – Widex2	10–10d	10–10d	917	547	432

Notes:

1. See General Notes, Sheet 1.

*For Uplift, use two clips, one on each side to comply with section 2321.7 of the FBC 2004

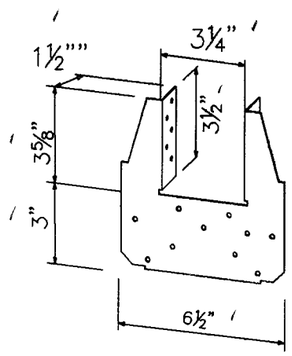

NVHC 43/2

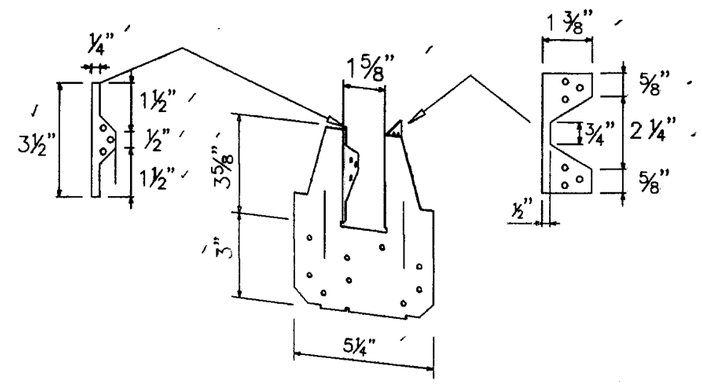

NVHC 43

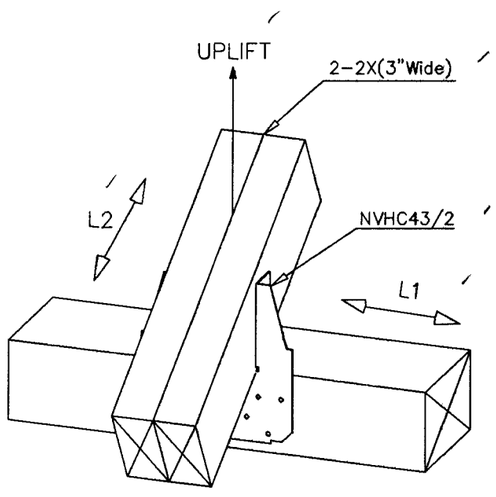

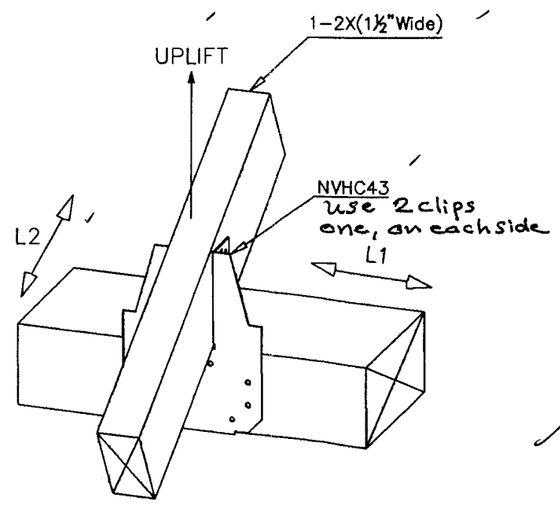

VIPIN N. TOLAT, PE (CIVIL)
FL. REG. # 12847
15123 LANTER CREEK LANE
HOUSTON, TX 77068

8/28/05

PRODUCT RENEWED
as complying with the Florida Building Code
Acceptance No 08-0828.02
Expiration Date 01/01/2014
By
Miami Dade Product Control Division

PRODUCT REVISED
as complying with the Florida Building Code
Acceptance No. 05-0516.01
Expiration Date 01/01/09
By
Miami Dade Product Control Division

Nu-Vue Industries, Inc.
1053-1059 East 29 Street
Hialeah, Florida 33013
(305) 694-0397
FAX: (305) 694-0398

NVHC 43 & NVHC 43/2 HURRICANE CLIP.

DWG #:	Sheet:	Date:	Revisions:
NU-3	3 of 3	JULY 10, 2003	(1) 11/10/03 (2) 12/11/03 (3) 4/27/05