MIAMI-DADE COUNTY
BUILDING CODE COMPLIANCE OFFICE (BCCO)
PRODUCT CONTROL DIVISION

MIAMI-DADE COUNTY, FLORIDA
METRO-DADE FLAGLER BUILDING
140 WEST FLAGLER STREET, SUITE 1603
MIAMI, FLORIDA 33130-1563
(305) 375-2901 FAX (305) 372-6339
www.maimidade.gov/buildingcode

NOTICE OF ACCEPTANCE (NOA)

United Enertech
3005 South Hickory Street
Chattanooga, TN 37407

SCOPE:

This NOA is being issued under the applicable rules and regulations governing the use of construction materials. The documentation submitted has been reviewed by Miami-Dade County Product Control Division and accepted by the Board of Rules and Appeals (BORA) to be used in Miami Dade County and other areas where allowed by the Authority Having Jurisdiction (AHJ).

This NOA shall not be valid after the expiration date stated below. The Miami-Dade County Product Control Division (In Miami Dade County) and/or the AHJ (in areas other than Miami Dade County) reserve the right to have this product or material tested for quality assurance purposes. If this product or material fails to perform in the accepted manner, the manufacturer will incur the expense of such testing and the AHJ may immediately revoke, modify, or suspend the use of such product or material within their jurisdiction. BORA reserves the right to revoke this acceptance, if it is determined by Miami-Dade County Product Control Division that this product or material fails to meet the requirements of the applicable building code.

This product is approved as described herein, and has been designed to comply with the Florida Building Code, including the High Velocity Hurricane Zone.

DESCRIPTION: Model FL-D-6 Aluminum Louver System.

APPROVAL DOCUMENT: Drawing No. **08-198**, titled "Aluminum Louver System Model FL-D-6", sheets 1 through 13 of 13, dated 08/21/08, prepared by Tilteco, Inc., signed and sealed by Walter A. Tillit Jr., P.E., bearing the Miami-Dade County Product Control Revision stamp with the Notice of Acceptance number and expiration date by the Miami-Dade County Product Control Division.

MISSILE IMPACT RATING: Large and Small Missile Impact Resistant.

LABELING: Each unit shall bear a permanent label with the manufacturer's name or logo, city, state and following statement: "Miami-Dade County Product Control Approved", unless otherwise noted herein.

RENEWAL of this NOA shall be considered after a renewal application has been filed and there has been no change in the applicable building code negatively affecting the performance of this product.

TERMINATION of this NOA will occur after the expiration date or if there has been a revision or change in the materials, use, and/or manufacture of the product or process. Misuse of this NOA as an endorsement of any product, for sales, advertising or any other purposes shall automatically terminate this NOA. Failure to comply with any section of this NOA shall be cause for termination and removal of NOA.

ADVERTISEMENT: The NOA number preceded by the words Miami-Dade County, Florida, and followed by the expiration date may be displayed in advertising literature. If any portion of the NOA is displayed, then it shall be done in its entirety.

INSPECTION: A copy of this entire NOA shall be provided to the user by the manufacturer or its distributors and shall be available for inspection at the job site at the request of the Building Official.

This NOA **revises NOA # 05-1005.02** and consists of this page 1 and evidence pages E-1 and E-2, as well as approval document mentioned above.

The submitted documentation was reviewed by **Carlos M. Utrera, P.E.**

MIAMI-DADE COUNTY APPROVED

10/6/08

NOTICE OF ACCEPTANCE: EVIDENCE SUBMITTED

A. DRAWINGS

1. Drawing No. **08-198**, titled "Aluminum Louver System Model FL-D-6", sheets 1 through 13 of 13, dated 08/21/08, prepared by Tilteco, Inc., signed and sealed by Walter A. Tillit Jr., P.E.

B. TESTS

1. Test report on Large Missile Impact Test per PA 201, Cyclic Wind Pressure Test per PA 203 and Uniform Static Air Pressure Test per PA 202 of "Aluminum Louver Panel System model FL-D-6", prepared by American Test Lab of South Florida, Report # **0604.01-01**, dated 06/21/01, signed and sealed by W. R. Mehner, P.E., & H. Hattem, P.E.
2. Test Report on Large Missile Impact Test per PA 201, Cyclic Wind Pressure Test per PA 203 of "Aluminum Louver Panel System FL-D-6", prepared by American Test Lab of South Florida, Report # **1212.01-01**, dated 12/13/01, signed and sealed by W. R. Mehner, P.E.
   "Submitted under NOA # 03-0106.20"

C. CALCULATIONS

1. Approval Aluminum Louver System Model FL-D-6, prepared by Tilteco, Inc., sheets 1 through 9 of 9, signed and sealed by Walter A. Tillit Jr., P.E., on 06/29/01.
2. Revision to Approval Aluminum Louver System Model FL-D-6, prepared by Tilteco, Inc., sheets 1 through 31 of 31, signed and sealed by Walter A. Tillit Jr., P.E., on 06/21/05.
   "Submitted under NOA # 03-0106.20"
3. Revision to Aluminum Louver System Model FL-D-4, prepared by Tilteco Inc, dated 08/21/08, sheets 1 through 134 of 134, complying with F.B.C. 2007, signed and sealed by Walter A. Tillit Jr., P.E.

D. QUALITY ASSURANCE

1. Miami Dade Building Code Compliance Office (BCCO).

10/6/08

Carlos M. Utrera, P.E.
Product Control Examiner
NOA No. 08-0902.09
Expiration Date: January 17, 2011
Approval Date: October 30, 2008

NOTICE OF ACCEPTANCE: EVIDENCE SUBMITTED

E. MATERIAL CERTIFICATIONS

1. Test report on Tensile Test per ASTM E8 of 3 samples ATL 0604.01-01B, C, & D1, No. 1GM-1037, signed and sealed by F. Grate, P.E.
   "Submitted under NOA # 03-0106.20"

F. STATEMENTS

1. No financial interest letter issued by Tilteco, Inc., dated 08/28/01, signed and sealed by Walter A. Tillit Jr., P.E.
2. Code compliance letter issued by Tilteco, Inc. on 08/28/01, signed and sealed by Walter A. Tillit Jr., P.E.
3. Test compliance letter issued by American Test Lab of South Florida on 06/21/01, signed and sealed by W. H. Mehner, P.E. & H. Hattem, P.E.
   "Submitted under NOA # 03-0106.20"
4. Revision cover letter, issued by Tilteco, Inc. on 08/26/08, signed and sealed by Walter A. Tillit Jr., P.E.

G. OTHER

1. Notice of Acceptance No. **05-1005.02**, issued to United Enertech, Inc., approved on 12/08/05 and expiring on 01/17/11.

10/6/08

Carlos M. Utrera, P.E.
Product Control Examiner
NOA No. 08-0902.09
Expiration Date: January 17, 2011
Approval Date: October 30, 2008

GENERAL NOTES:

1. ALUMINUM LOUVER SYSTEM SHOWN ON THIS PRODUCT APPROVAL DOCUMENT (P.A.D.) HAS BEEN VERIFIED FOR CODE COMPIANCE IN ACCORDANCE WITH THE 2007 EDITION OF THE FLORIDA BUILDING CODE.
DESIGN WIND LOADS SHALL BE DETERMINED AS PER SECTION 1620 OF THE ABOVE MENTIONED CODE, IN ORDER TO VERIFY THAT COMPONENTS AND ANCHORS ON THIS P.E.D AS TESTED WERE NOT OVER STRESSED, A 33% INCREASE IN ALLOWABLE STRESS FOR WIND LOADS WAS NOT USED IN THEIR ANALYSIS . A DURATION FACTOR CD=1.60 WAS USED FOR VERIFICATION OF FASTENERS SPACINGS IN WOOD.
ALUMINUM LOUVER SYSTEM'S ADEQUACY FOR IMPACT AND FATIGUE RESISTANCE HAS BEEN VERIFIED IN ACCORDANCE WITH SECTION **1626** OF THE ABOVE MENTIONED CODE AS PER AMERICAN TESTING LAB REPORT # 0604.01-01 AS PER TAS-201, TAS-202 & TAS-203 PROTOCOLS.

2. ALL ALUMINUM EXTRUSIONS SHALL BE 6063-T6 ALLOY (UNLESS OTHERWISE NOTED).

3. ALL SCREWS TO BE STAINLESS STEEL 304 OR 316 SERIES W/ 50 ksi YIELD STRENGTH AND 90 ksi TENSILE STRENGTH OR CORROSION RESISTANT COATED CARBON STEEL AS PER DIN 50018.
THRU BOLTS AT MULLION TO BE ASTM A-307 GALVANIZED STEEL OR AISI 304 SERIES STAINLESS STEEL.

4. ALL ALUMINUM COMPONENTS FRAMING SHALL BE WELDED IN ACCORDANCE WITH AWS D1.2 ,PER THE AMERICAN WELDING SOCIETY LATEST EDITION REGULATIONS USE CERTIFIED WELDERS. USE ER-5356 ELECTRODES.

5. JAMB **ANCHOR REQUIREMENTS**: EMBEDMENT AND EDGE DISTANCE ARE BEYOND ANY FINISH.
(A) TO EXISTING POURED CONCRETE: (MIN. f'c = 3192 psi), MIN. EDGE DISTANCE (E.D.) = 2 1/2".
– 1/4"ø TAPCON ANCHORS W/ 1 3/4" MIN. EMBEDMENT, AS MANUFACTURED BY (ITW BUILDEX).

(B) TO EXISTING A.S.T.M. C-90 CONCRETE BLOCK WALL. MIN. EDGE DISTANCE (E.D.) = 2 1/2".
– 1/4"ø TAPCON ANCHORS W/ 1 1/4" MIN. EMBEDMENT, AS MANUFACTURED BY (ITW BUILDEX).

(C) TO EXISTING 2x P.T. WOOD BUCK. MIN. EDGE DISTANCE (E.D.) = 1 1/2".
– 1/4"ø LAG SCREWS W/ 1 1/2" MIN. EMBEDMENT, AS PER N.D.S. 2005

(D) TO EXISTING MIN. 1/8" THICK STEEL MEMBER (ASTM A-500, A-653 OR A-36) MIN. EDGE DISTANCE (E.D.) = 1/2".
– 1/4"øx3/4", AS MANUFACTURED BY (ITW BUILDEX).

(E) ANCHORS SHALL BE INSTALLED FOLLOWING ALL OF THE RECOMMENDATIONS AND SPECIFICATIONS OF THE ANCHOR'S MANUFACTURER.

6. ANCHORS REQUIRED FOR MULLION CONNECTIONS SHALL BE AS SPECIFIED ON APPLICABLE SECTIONS SHOWN ON SHEETS 6, 7 & 8 RESPECTIVELY.

(A) KWIK BOLT TZ EXPANSION ANCHORS & M16 HSL-3 HEAVY DUTY AS MANUFACTURED BY HILTI, INC.; 3/8"ø LAG SCREW AS PER N.D.S 2005 & 3/8"ø MACHINE SCREW SHALL BE MADE OF NON CORROSIVE STEEL W/ A MINIMUM YIELD STRENGTH Fy = 33 ksi. W/ CORROSION RESISTANCE AS PER DIN 50018.

(B) MINIMUM EDGE DISTANCE AND SPACING FOR ABOVE MENTIONED ANCHORS SHALL BE AS INDICATED BELOW OR AS SHOWN ON CORRESPONDING DETAILS FOR EACH LOUVER COMPONENT INSTALLATION IN THIS DRAWING, WHICHEVER IS LARGER (MORE CRITICAL).
EDGE DISTANCE AND EMBEDMENTS ARE BEYOND ANY FINISH MATERIAL.

ANCHOR	SPACING @ 100%	EDGE DISTANCE MIN. @ 100%	EMBEDMENT	SUBSTRATE
1/2" KWIK BOLT TZ	6"	6"	4"	POURED CONCRETE (f'c=3000psi)
5/8" KWIK BOLT TZ	6"	6 3/4"	5"	POURED CONCRETE (f'c=3000psi)
3/4" KWIK BOLT TZ	6"	9"	5"	POURED CONCRETE (f'c=3000psi)
M16 HSL-3 HEAVY DUTY	6"	5 7/8"	5"	POURED CONCRETE (f'c=3000psi)
3/8" LAG SCREW	2"	1 1/4"	1 1/2" OR 3"	WOOD (G=0.55)
3/8" MACHINE SCREW	2"	3/4"	–	STEEL (Fy=33 ksi.)

(C) ANCHORS SHALL BE INSTALLED FOLLOWING ALL OF THE RECOMMENDATIONS AND SPECIFICATIONS OF THE ANCHOR'S MANUFACTURER.

7. THIS LOUVER SHALL BE ONLY INSTALLED IN A LOCATION WHERE THE ROOM BEHIND THE LOUVER IS DESIGNED TO DRAIN WATER PENETRATING INTO THE ROOM, AND THE ROOM WILL HOUSE WATER RESISTENT/WATER PROOF EQUIPMENT, COMPONENTS OR SUPPLIES.

8. IT SHALL BE RESPONSIBILITY OF THE CONTRACTOR TO VERIFY THE SOUNDNESS OF THE STRUCTURE WHERE LOUVER SYSTEM IS TO BE ATTACHED TO INSURE PROPER ANCHORAGE.

9. WOOD BUCKS BY OTHERS, MUST BE ANCHORED PROPERLY TO TRANSFER LOADS TO THE BUILDING STRUCTURE. WOOD BUCKS MUST BE SOUTHERN PINE, G = 0.55.

10. (A) THIS PRODUCT APPROVAL DOCUMENT (P.A.D.) PREPARED BY THIS ENGINEER IS GENERIC AND DOES NOT PROVIDE INFORMATION FOR A SITE SPECIFIC PROJECT; i.e. WHERE THE SITE CONDITIONS DEVIATE FROM THE P.A.D.

(B) CONTRACTOR TO BE RESPONSIBLE FOR THE SELECTION INCLUDING LIFE SAFETY, PURCHASE AND INSTALLATION OF THIS PRODUCT BASED ON THIS PRODUCT APPROVAL PROVIDED HE/SHE DOES NOT DEVIATE FROM THE CONDITIONS DETAILED ON THIS DOCUMENT. CONSTRUCTION SAFETY AT SITE IS THE CONTRACTOR'S RESPONSIBILITY.

(C) THIS PRODUCT APPROVAL DOCUMENT WILL BE CONSIDERED INVALID IF MODIFIED.

(D) SITE SPECIFIC PROJECTS SHALL BE PREPARED BY A FLORIDA REGISTERED ENGINEER OR ARCHITECT WHICH WILL BECOME THE PROFESSIONAL OF RECORD (P.O.R) FOR THE PROJECT AND WHO WILL BE RESPONSIBLE FOR THE PROPER USE OF THE P.A.D.

(E) ORIGINAL P.A.D SHALL BEAR THE DATE AND ORIGINAL SEAL AND SIGNATURE OF THE PROFESSIONAL ENGINEER OR RECORD THAT PREPARED IT.

11. ALUMINUM LOUVER MANUFACTURER'S LABEL SHALL BE PLACED ON THE EXPOSED SURFACE OF LOUVER BLADE (COMPONENT 2). ONE LABEL SHALL BE PLACED FOR EVERY OPENING. LABEL SHALL READ AS FOLLOWS:
UNITED ENERTECH, INC.
CHATTANOOGA, TN.
MIAMI-DADE COUNTY PRODUCT CONTROL APPROVED.

MAXIMUM DESIGN PRESSURE RATING
+150.0, –150.0 psf.
LARGE MISSILE IMPACT RESISTANCE.

PRODUCT REVISED
as complying with the Florida Building Code
Acceptance No 08-0502.09
Expiration Date 01/17/2011
By
Miami Dade Product Control Division

F.B.C. (HIGH VELOCITY HURRICANE ZONE)

AUG 2 8 2008

© 2008 TILTECO, INC

TILTECO INC.
TILLIT TESTING & ENGINEERING COMPANY
6355 N.W. 36th. St., Ste. 305, VIRGINIA GARDENS, Fl. 33166
Phone : (305)871-1530. Fax : (305)871-1531
EB-0006719
WALTER A. TILLIT Jr. P.E.
FLORIDA Lic. # 44167

ALUMINUM LOUVER SYSTEM
MODEL FL-D-6

UNITED ENERTECH, INC.
3101 SOUTH ORCHARD KNOB AVE.
CHATTANOOGA, TN, 37407
PHONE: (423)698-7715 FAX: (423)309-2410

REV. No	DESCRIPTION	DATE	REV. No	DESCRIPTION	DATE
1	OLD 05-151	08/21/08	3	–	–
2			4	–	–

DRAWN BY I.A
08/21/08 DATE
08-198 DRAWING No
SHEET 1 OF 13

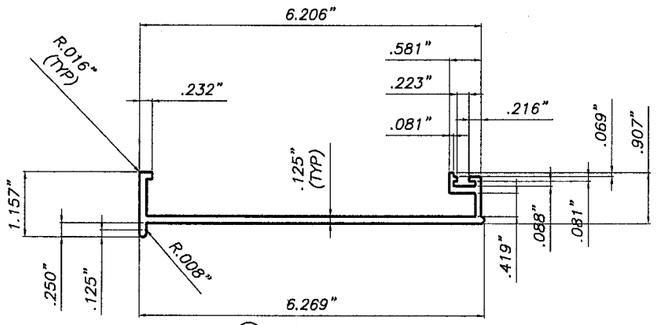

① 6" TOP BLADE
SCALE: 3/8"=1"

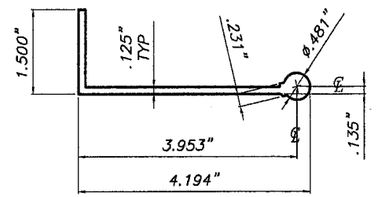

③ 6" BLADE SUPPORT
SCALE: 3/8"=1"

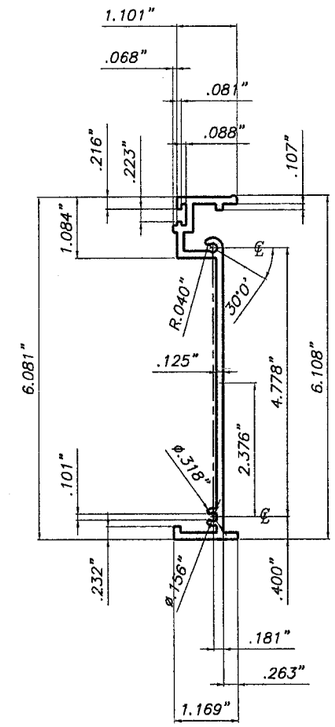

⑤ 6" SIDE JAMB
SCALE: 3/8"=1"

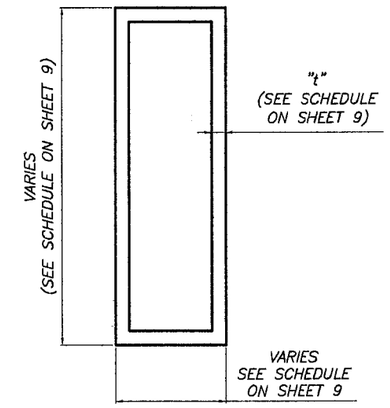

⑦ MULLION
6063-T6 ALLOY
SCALE: 3/8"=1"

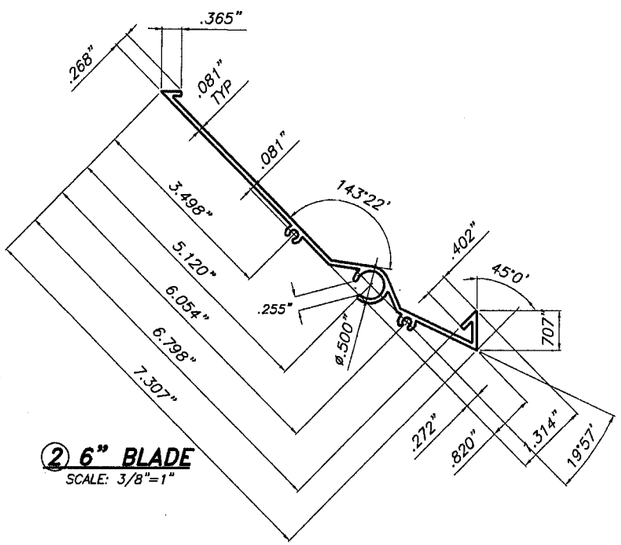

② 6" BLADE
SCALE: 3/8"=1"

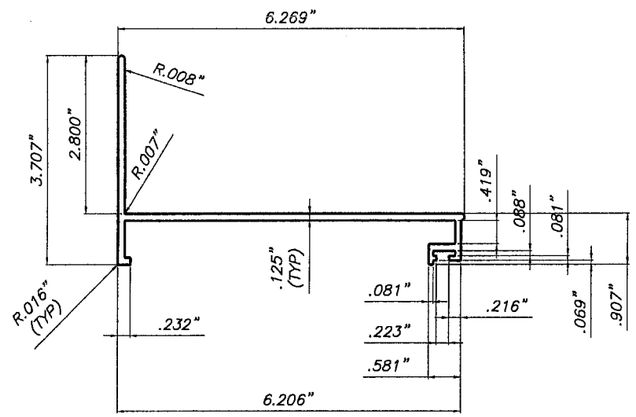

④ 6" BOTTOM BLADE
SCALE: 3/8"=1"

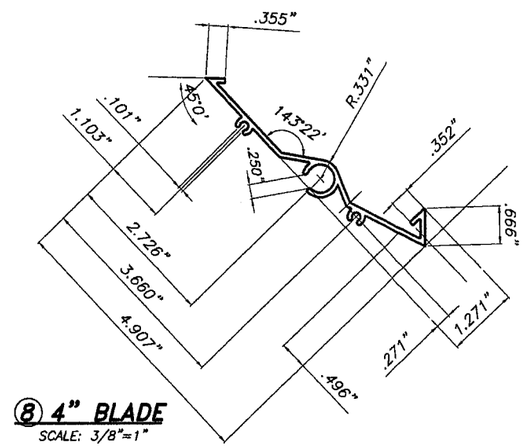

⑧ 4" BLADE
SCALE: 3/8"=1"

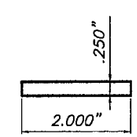

⑥ LOUVER IMPACT STRAP
SCALE: 3/8"=1"

COMPONENTS
SCALE: 3/8"=1"

PRODUCT REVISED
as complying with the Florida Building Code
Acceptance No 08-0902.09
Expiration Date 07/17/2011
By
Miami Dade Product Control Division

F.B.C. (HIGH VELOCITY HURRICANE ZONE)

AUG 28 2008

© 2008 TILTECO, INC

TILTECO INC.
TILLIT TESTING & ENGINEERING COMPANY
6355 N.W. 36th. St., Ste. 305, VIRGINIA GARDENS, FL 33166
Phone : (305)871-1530. Fax : (305)871-1531
EB-0006719
WALTER A. TILLIT Jr. P.E.
FLORIDA Lic. # 44167

ALUMINUM LOUVER SYSTEM
MODEL FL-D-6

UNITED ENERTECH, INC.
3101 SOUTH ORCHARD KNOB AVE.
CHATTANOOGA, TN, 37407
PHONE: (423)698-7715 FAX: (423)309-2410

DRAWN BY I.A
08/21/08 DATE
08-198 DRAWING No

REV. No	DESCRIPTION	DATE	REV. No	DESCRIPTION	DATE
1	OLD 05-151	08/21/08	3	–	–
2			4	–	–

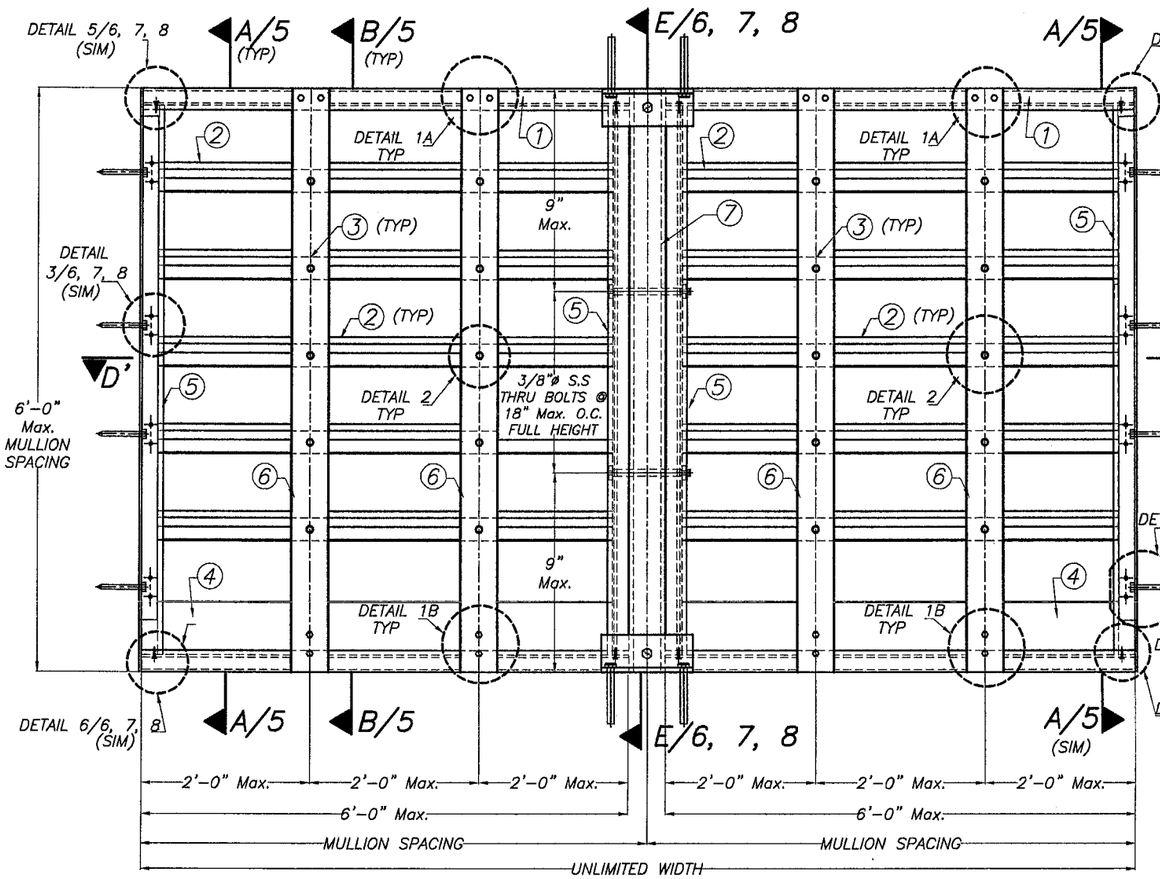

MULTIPLE UNITS HORIZONTALLY EXPANDED (INSIDE ELEVATION)

SCALE: 1/8"=1"

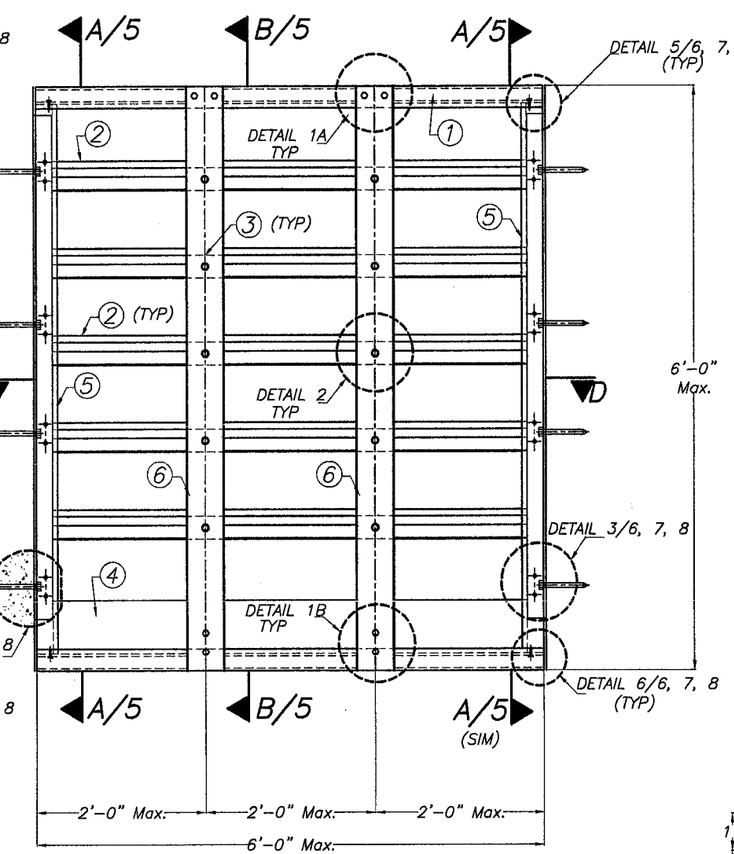

SINGLE UNIT (INSIDE ELEVATION)

SCALE: 1/8"=1"

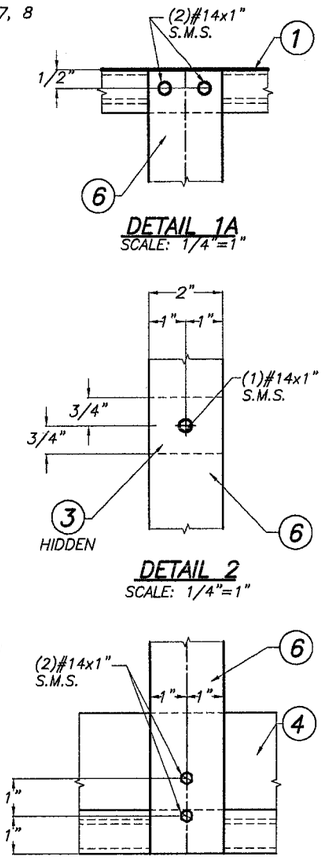

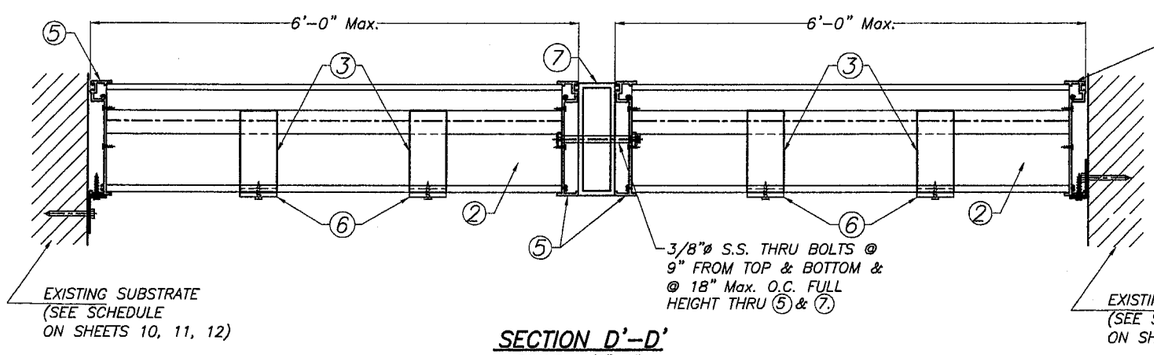

SECTION D'-D'

SCALE: 1/8"=1"

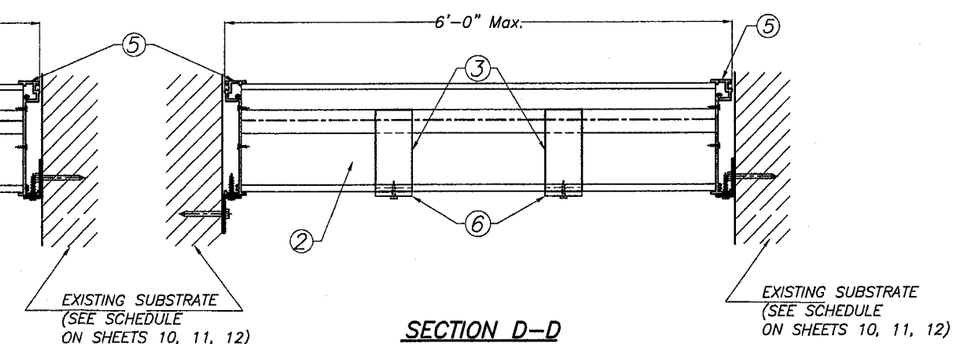

SECTION D-D

SCALE: 1/8"=1"

F.B.C. (HIGH VELOCITY HURRICANE ZONE)

PRODUCT REVISED as complying with the Florida Building Code
Acceptance No 08-0702.09
Expiration Date 01/17/2011
By
Miami-Dade Product Control Division

AUG 2 8 2008

©2008 TILTECO, INC

TILTECO INC.
TILLIT TESTING & ENGINEERING COMPANY
6355 N.W. 36th. St., Ste. 305, VIRGINIA GARDENS, Fl. 33166
Phone : (305)871-1530. Fax : (305)871-1531
EB-0006719
WALTER A. TILLIT Jr. P.E.
FLORIDA Lic. # 44167

ALUMINUM LOUVER SYSTEM
MODEL FL-D-6

UNITED ENERTECH, INC.
3101 SOUTH ORCHARD KNOB AVE.
CHATTANOOGA, TN, 37407
PHONE: (423)698-7715 FAX: (423)309-2410

REV. No	DESCRIPTION	DATE	REV. No	DESCRIPTION	DATE
1	OLD 05-151	08/21/08	3	–	–
2			4	–	–

DRAWN BY I.A

08/21/08 DATE

08-198 DRAWING No

SHEET 3 OF 13

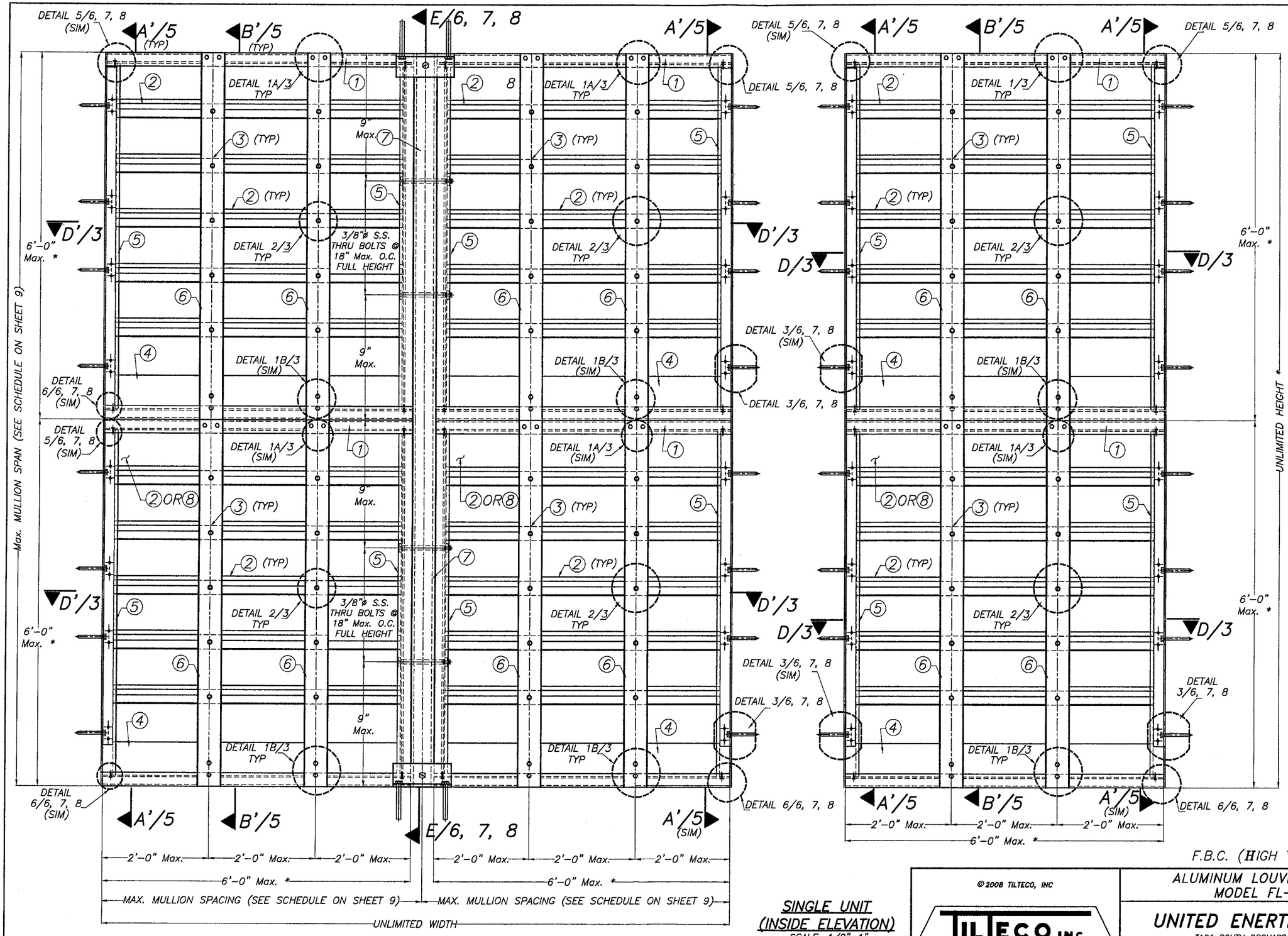

* NUMBER OF LOUVER PANEL UNITS NEEDED TO ACHIEVE THE OPENING HEIGHT AND WIDTH MAY VARY HOWEVER MAXIMUM UNIT HEIGHT AND WIDTH SHALL NO EXCEED 6'-0".

MULTIPLE UNITS HORIZONTALLY & VERTICALLY EXPANDED (INSIDE ELEVATION)

SCALE: 1/8"=1"

SINGLE UNIT (INSIDE ELEVATION)

SCALE: 1/8"=1"

F.B.C. (HIGH VELOCITY HURRICANE ZONE)

PRODUCT REVISED as complying with the Florida Building Code Acceptance No 08-0902.09 Expiration Date 01/17/2011 By Miami Dade Product Control Division

AUG 28 2008

© 2008 TILTECO, INC

TILTECO INC.
TILLIT TESTING & ENGINEERING COMPANY
6355 N.W. 36th. St., Ste. 305, VIRGINIA GARDENS, Fl. 33166
Phone : (305)871-1530. Fax : (305)871-1531
EB-0006719
WALTER A. TILLIT Jr. P.E.
FLORIDA Lic. # 44167

ALUMINUM LOUVER SYSTEM
MODEL FL-D-6

UNITED ENERTECH, INC.
3101 SOUTH ORCHARD KNOB AVE.
CHATTANOOGA, TN, 37407
PHONE: (423)698-7715 FAX: (423)309-2410

REV. No	DESCRIPTION	DATE	REV. No	DESCRIPTION	DATE
1	OLD 05-151	08/21/08	3	-	-
2			4	-	-

DRAWN BY I.A

08/21/08 DATE

08-198 DRAWING No

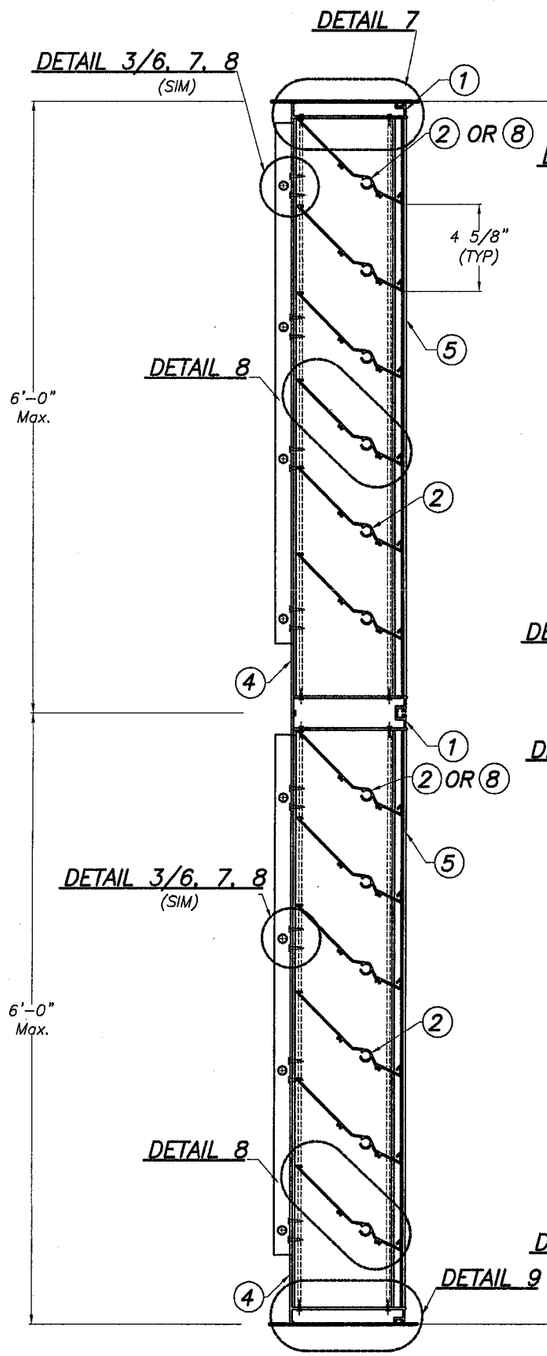

SECTION A'-A'
SCALE: 1/8"=1"

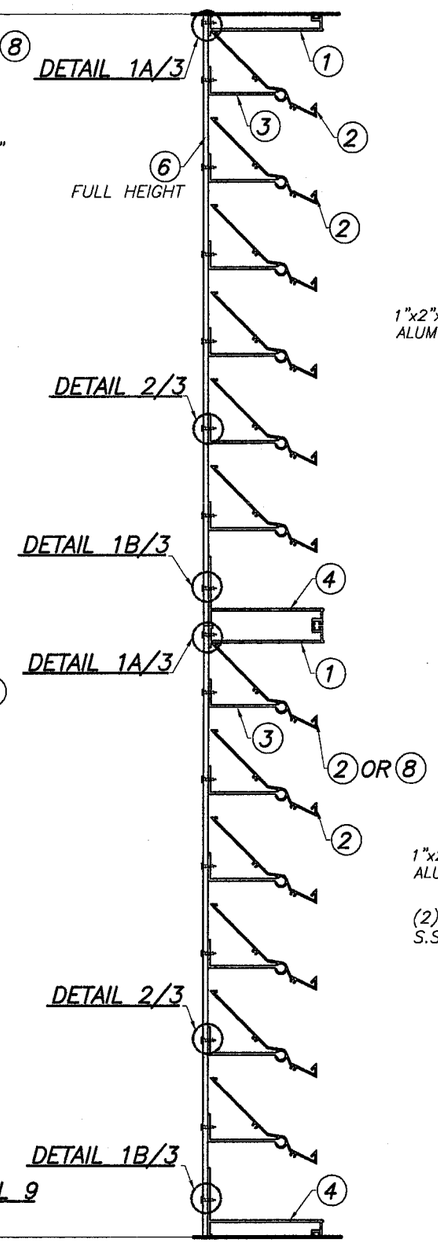

SECTION B'-B'
SCALE: 1/8"=1"

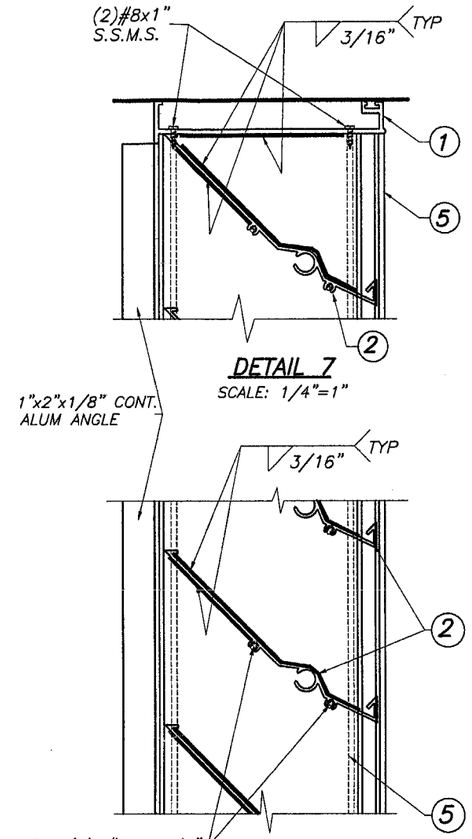

DETAIL 7
SCALE: 1/4"=1"

DETAIL 8
SCALE: 1/4"=1"

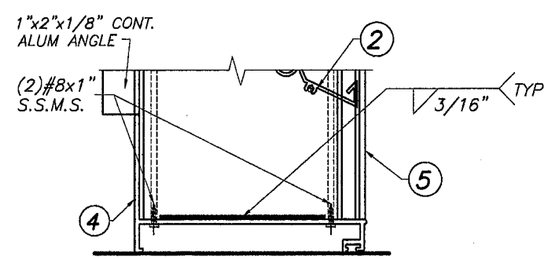

DETAIL 9
SCALE: 1/4"=1"

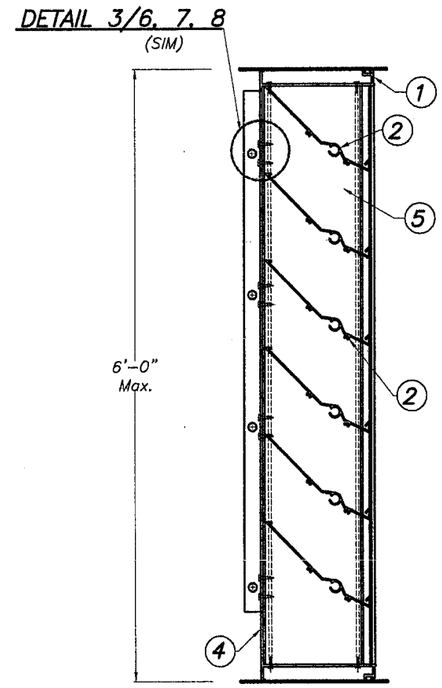

SECTION A-A
SCALE: 1/8"=1"

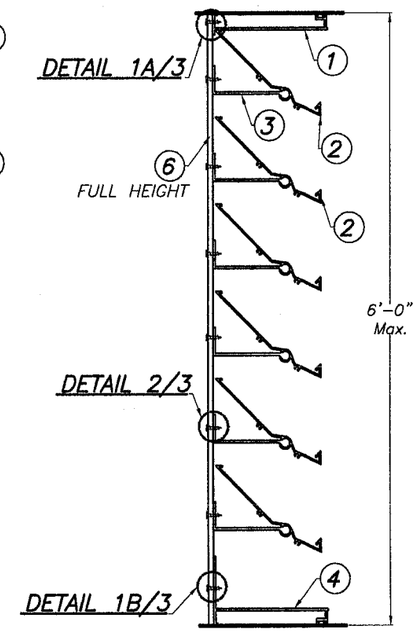

SECTION B-B
SCALE: 1/8"=1"

PRODUCT REVISED
as complying with the Florida
Building Code
Acceptance No 08-0902.09
Expiration Date 01/17/2011
By
Miami Dade Product Control
Division

F.B.C. (HIGH VELOCITY HURRICANE ZONE)

AUG 28 2008

©2008 TILTECO, INC

TILTECO INC.
TILLIT TESTING & ENGINEERING COMPANY
6355 N.W. 36th. St., Ste. 305, VIRGINIA GARDENS, Fl. 33166
Phone : (305)871-1530. Fax : (305)871-1531
EB-0006719
WALTER A. TILLIT Jr. P.E.
FLORIDA Lic. # 44167

ALUMINUM LOUVER SYSTEM
MODEL FL-D-6

UNITED ENERTECH, INC.
3101 SOUTH ORCHARD KNOB AVE.
CHATTANOOGA, TN, 37407
PHONE: (423)698-7715 FAX: (423)309-2410

REV. No	DESCRIPTION	DATE	REV. No	DESCRIPTION	DATE
1	OLD 05-151	08/21/08	3	-	-
2			4	-	-

DRAWN BY I.A
08/21/08 DATE
08-198 DRAWING No
SHEET 5 OF 13

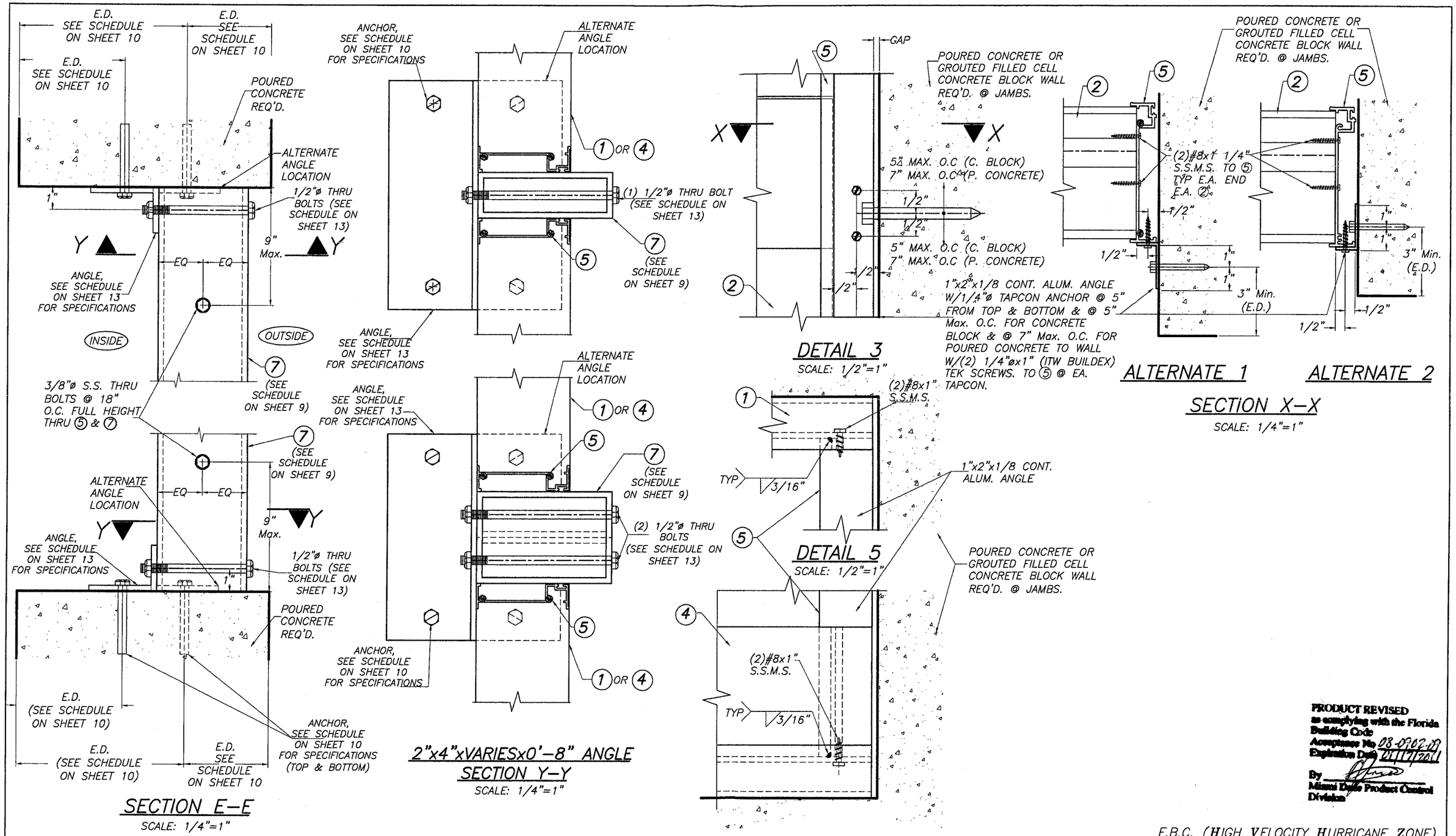

MULLION AND JAMB INSTALLATION INTO POURED CONCRETE OR GROUTED FILLED CELL CONCRETE BLOCK.

PRODUCT REVISED
as complying with the Florida Building Code
Acceptance No 08-0902.09
Expiration Date 2/11/2011
By
Miami Dade Product Control Division

F.B.C. (HIGH VELOCITY HURRICANE ZONE)

AUG 28 2009

©2008 TILTECO, INC

TILTECO INC.
TILLIT TESTING & ENGINEERING COMPANY
6355 N.W. 36th. St., Ste. 305, VIRGINIA GARDENS, Fl. 33166
Phone : (305)871-1530. Fax : (305)871-1531
EB-0006719
WALTER A. TILLIT Jr. P.E.
FLORIDA Lic. # 44167

ALUMINUM LOUVER SYSTEM
MODEL FL-D-6

UNITED ENERTECH, INC.
3101 SOUTH ORCHARD KNOB AVE.
CHATTANOOGA, TN, 37407
PHONE: (423)698-7715 FAX: (423)309-2410

REV. No	DESCRIPTION	DATE	REV. No	DESCRIPTION	DATE
1	OLD 05-151	08/21/08	3	–	–
2			4	–	–

DRAWN BY I.A
08/21/08 DATE
08-198 DRAWING No
SHEET 6 OF 13

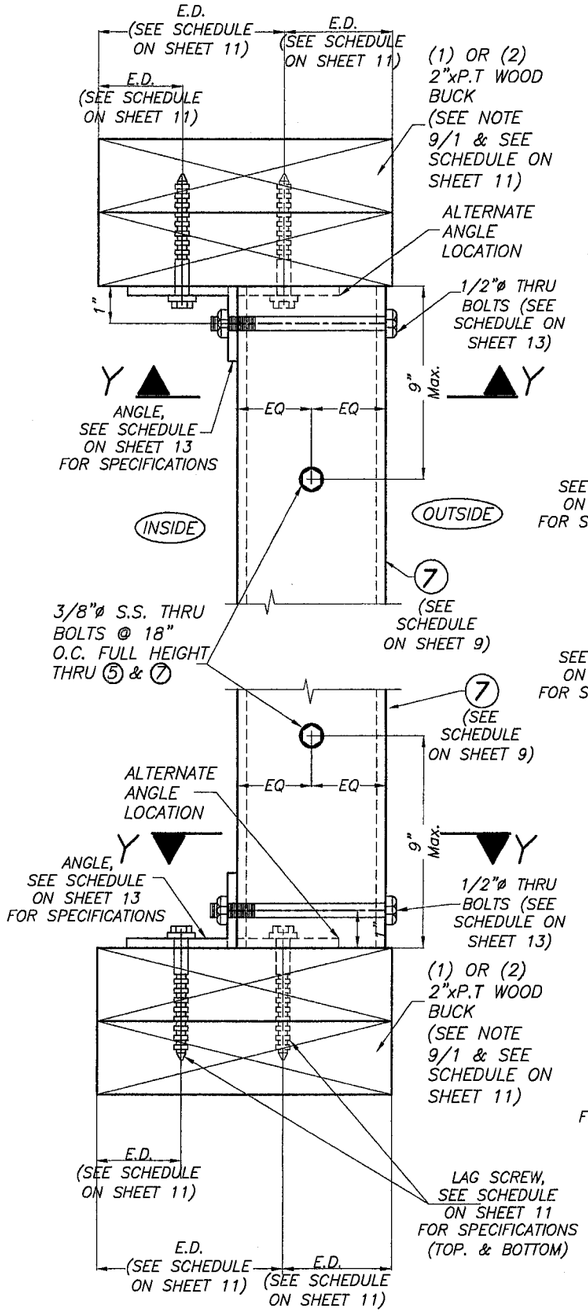

SECTION E–E

SCALE: 1/4"=1"

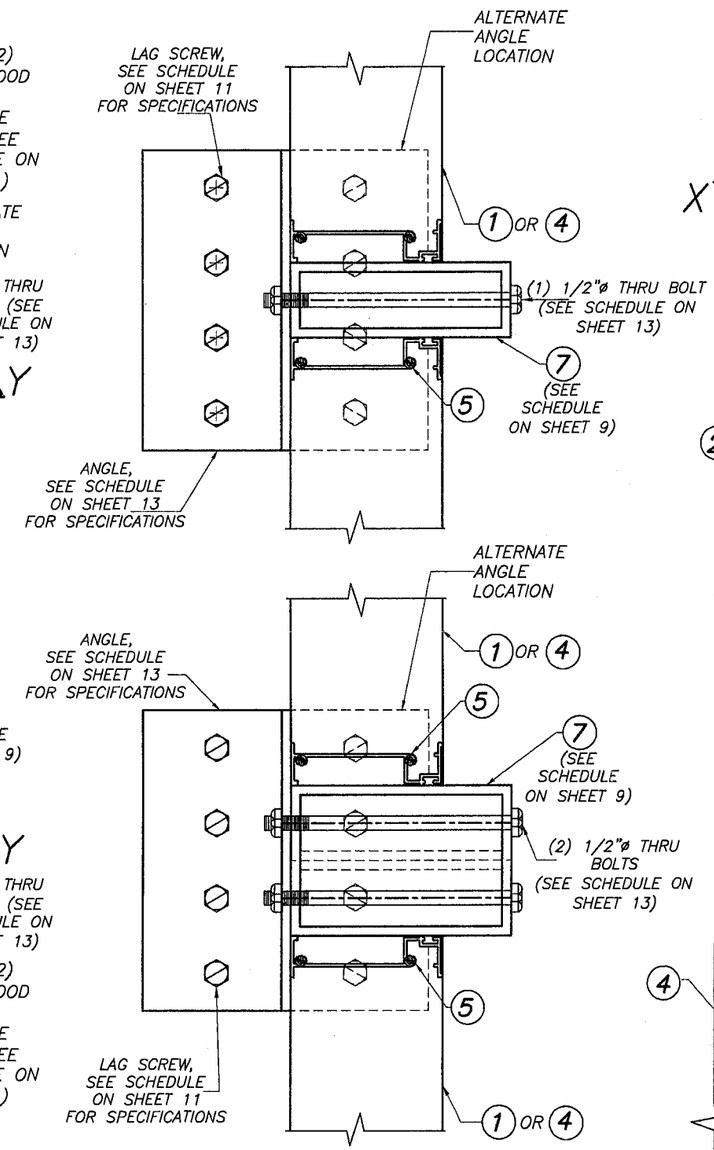

2"x4"xVARIESx0'–8" ANGLE
SECTION Y–Y

SCALE: 1/4"=1"

MULLION AND JAMB INSTALLATION INTO WOOD

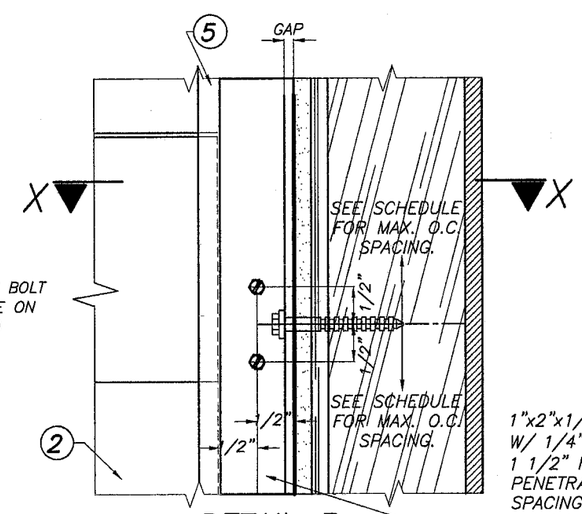

DETAIL 3

SCALE: 1/2"=1"

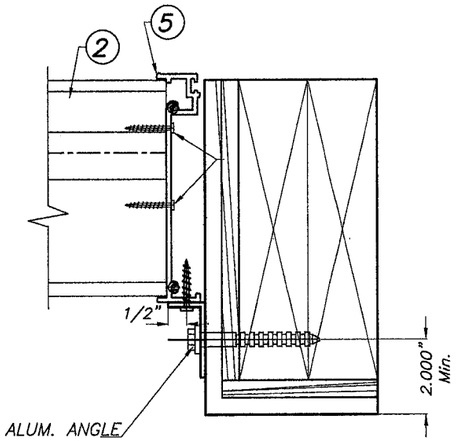

1"x2"x1/8 CONT. ALUM. ANGLE W/ 1/4"ø LAG SCREW W/ 1 1/2" Min. THREADED PENETRATION @ Max. O.C. SPACING PER SCHEDULE TO WALL W/ (2) 1/4"øx1" (ITW BUILDEX) TEK SCREWS. TO 5 @ EA. TAPCON.

ALTERNATE 1

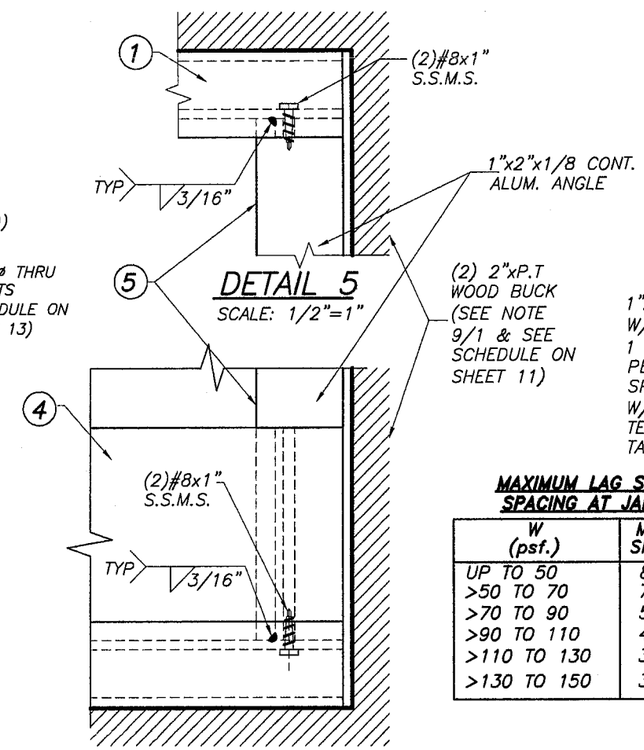

DETAIL 5

SCALE: 1/2"=1"

DETAIL 6

SCALE: 1/2"=1"

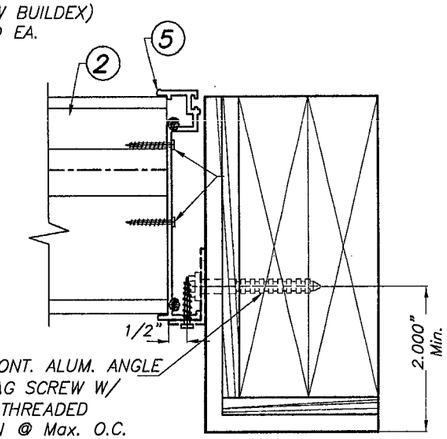

1"x2"x1/8 CONT. ALUM. ANGLE W/ 1/4"ø LAG SCREW W/ 1 1/2" Min. THREADED PENETRATION @ Max. O.C. SPACING PER SCHEDULE TO WALL W/ (2) 1/4"øx1" (ITW BUILDEX) TEK SCREWS. TO 5 @ EA. TAPCON.

ALTERNATE 2

SECTION X–X

SCALE: 1/4"=1"

MAXIMUM LAG SCREW SPACING AT JAMBS

W (psf.)	MAX.O.C. SPACING
UP TO 50	8"
>50 TO 70	7"
>70 TO 90	5 1/2"
>90 TO 110	4 1/2"
>110 TO 130	3 1/2"
>130 TO 150	3"

PRODUCT REVISED
as complying with the Florida Building Code
Acceptance No 08-0902.09
Expiration Date 01/17/2011
By
Miami Dade Product Control Division

F.B.C. (HIGH VELOCITY HURRICANE ZONE)

©2008 TILTECO, INC

TILTECO INC.
TILLIT TESTING & ENGINEERING COMPANY
6355 N.W. 36th. St., Ste. 305, VIRGINIA GARDENS, Fl. 33166
Phone : (305)871-1530. Fax : (305)871-1531
EB-0006719
WALTER A. TILLIT Jr. P.E.
FLORIDA Lic. # 44167

AUG 28 2008

ALUMINUM LOUVER SYSTEM
MODEL FL-D-6

UNITED ENERTECH, INC.
3101 SOUTH ORCHARD KNOB AVE.
CHATTANOOGA, TN, 37407
PHONE: (423)698-7715 FAX: (423)309-2410

REV. No	DESCRIPTION	DATE	REV. No	DESCRIPTION	DATE
1	OLD 05-151	08/21/08	3	–	–
2			4	–	–

DRAWN BY I.A
08/21/08 DATE
08-198 DRAWING No
SHEET 7 OF 13

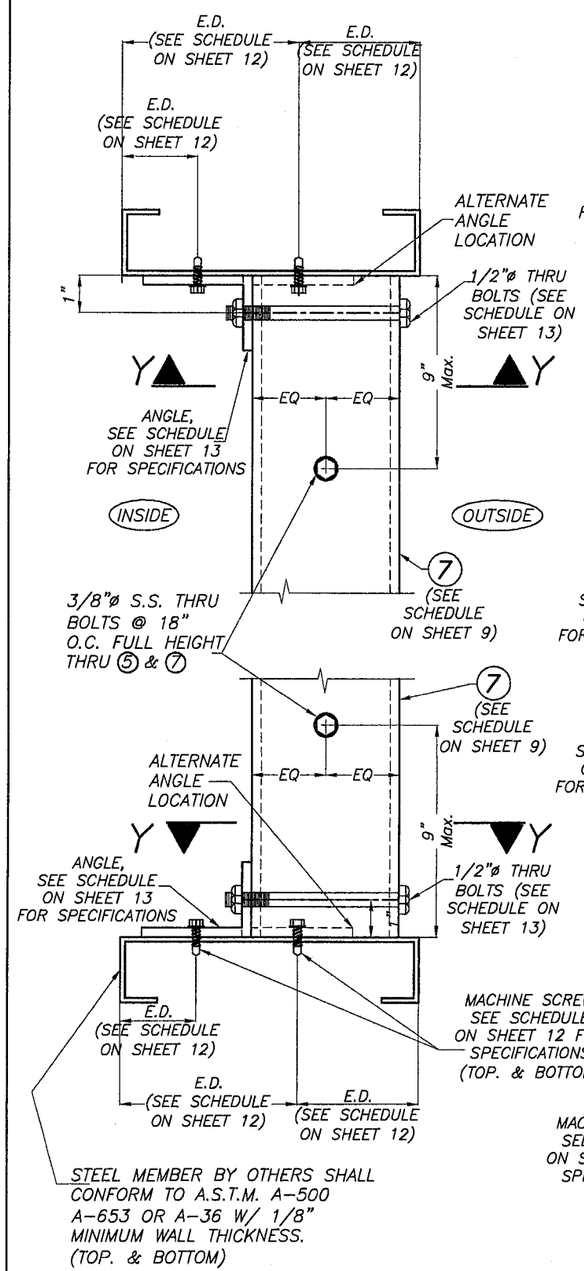

SECTION E-E

SCALE: 1/4"=1"

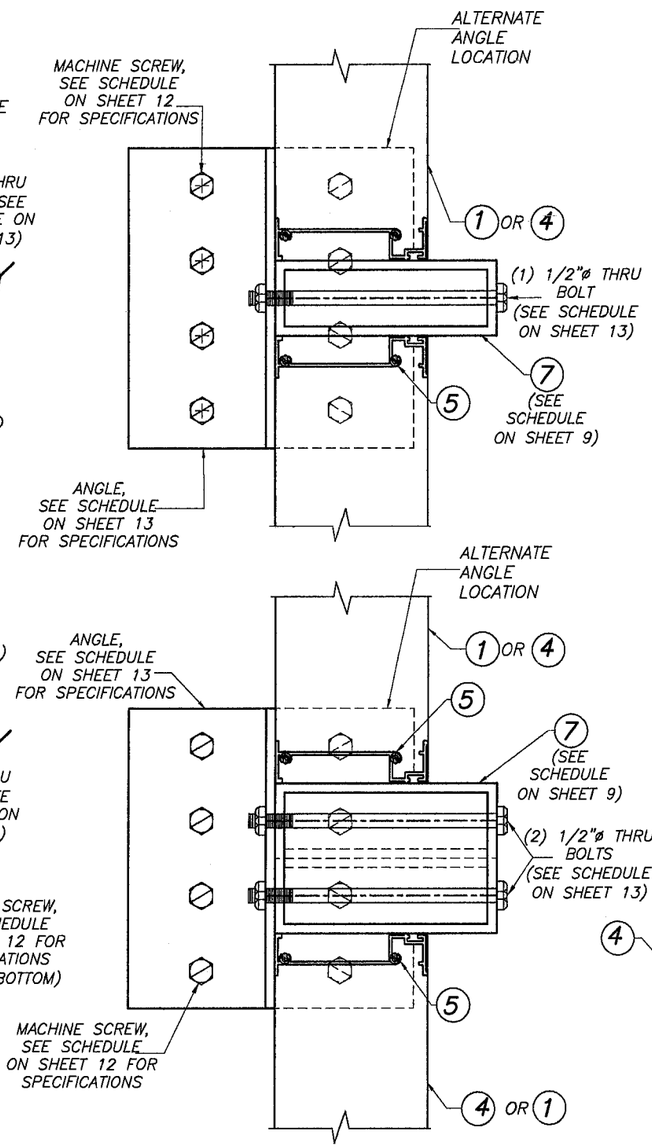

2"x4"xVARIESx0'-8" ANGLE SECTION Y-Y

SCALE: 1/4"=1"

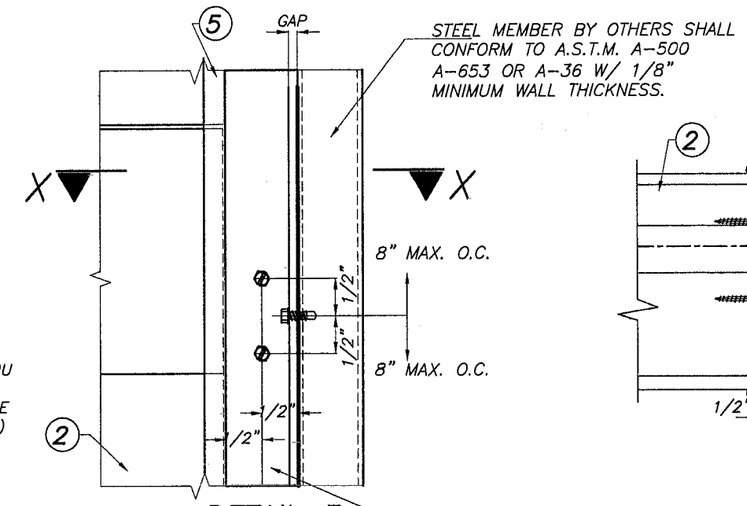

DETAIL 3

SCALE: 1/2"=1"

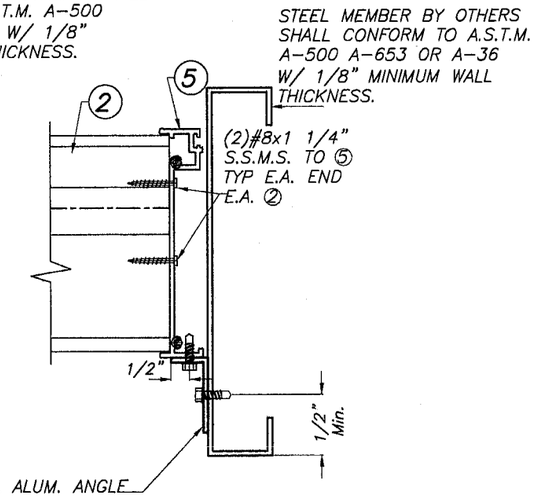

ALTERNATE 1

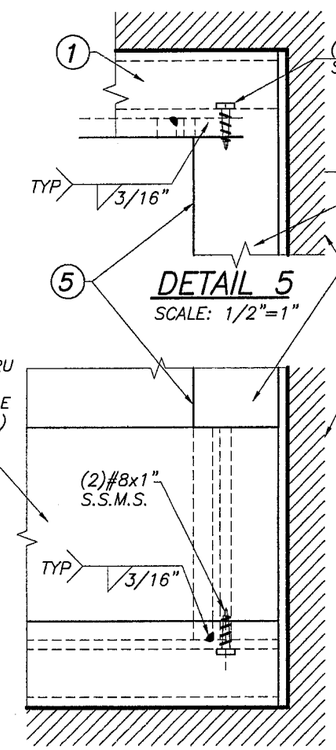

DETAIL 5

SCALE: 1/2"=1"

DETAIL 6

SCALE: 1/2"=1"

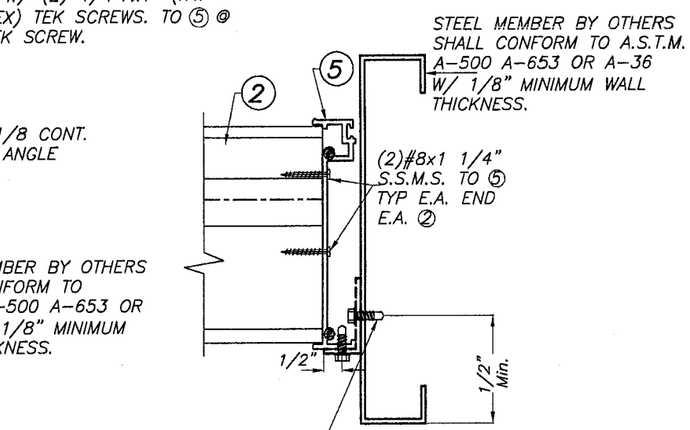

ALTERNATE 2

SECTION X-X

SCALE: 1/2"=1"

PRODUCT REVISED
as complying with the Florida Building Code
Acceptance No 08-0902.09
Expiration Date 01/17/2011
By
Miami Dade Product Control Division

F.B.C. (HIGH VELOCITY HURRICANE ZONE)

MULLION AND JAMB INSTALLATION INTO 1/8" THICK MIN. STEEL

AUG 28 2008

© 2008 TILTECO, INC

TILTECO INC.
TILLIT TESTING & ENGINEERING COMPANY
6355 N.W. 36th. St., Ste. 305, VIRGINIA GARDENS, FL 33166
Phone : (305)871-1530. Fax : (305)871-1531
EB-0006719
WALTER A. TILLIT Jr. P.E.
FLORIDA Lic. # 44167

ALUMINUM LOUVER SYSTEM
MODEL FL-D-6

UNITED ENERTECH, INC.
3101 SOUTH ORCHARD KNOB AVE.
CHATTANOOGA, TN, 37407
PHONE: (423)698-7715 FAX: (423)309-2410

REV. No	DESCRIPTION	DATE	REV. No	DESCRIPTION	DATE
1	OLD 05-151	08/21/08	3	-	-
2			4	-	-

DRAWN BY I.A
08/21/08 DATE
08-198 DRAWING No
SHEET 8 OF 13

MAXIMUM MULLION SPAN SCHEDULE FOR A GIVEN DESIGN LOAD AND MULLION SPACING *

W (psf)	MULLIONS											
	2"x6"x1/4"				4"x6"x1/4" OR (2) 2"x6"x1/4"				4"x8"x1/4"			
	MULLION SPACING				MULLION SPACING				MULLION SPACING			
	3'	4'	5'	6'	3'	4'	5'	6'	3'	4'	5'	6'
30	10' - 0"	10' - 0"	10' - 0"	10' - 0"	12' - 0"	12' - 0"	12' - 0"	12' - 0"	12' - 0"	12' - 0"	12' - 0"	12' - 0"
40	10' - 0"	10' - 0"	10' - 0"	10' - 0"	12' - 0"	12' - 0"	12' - 0"	12' - 0"	12' - 0"	12' - 0"	12' - 0"	12' - 0"
50	10' - 0"	10' - 0"	10' - 0"	10' - 0"	12' - 0"	12' - 0"	12' - 0"	12' - 0"	12' - 0"	12' - 0"	12' - 0"	12' - 0"
60	10' - 0"	10' - 0"	10' - 0"	10' - 0"	12' - 0"	12' - 0"	12' - 0"	12' - 0"	12' - 0"	12' - 0"	12' - 0"	12' - 0"
70	10' - 0"	10' - 0"	10' - 0"	10' - 0"	12' - 0"	12' - 0"	12' - 0"	11' - 10"	12' - 0"	12' - 0"	12' - 0"	12' - 0"
80	10' - 0"	10' - 0"	10' - 0"	9' - 9"	12' - 0"	12' - 0"	12' - 0"	11' - 4"	12' - 0"	12' - 0"	12' - 0"	12' - 0"
90	10' - 0"	10' - 0"	10' - 0"	9' - 5"	12' - 0"	12' - 0"	11' - 7"	10' - 11"	12' - 0"	12' - 0"	12' - 0"	12' - 0"
100	10' - 0"	10' - 0"	9' - 8"	9' - 0"	12' - 0"	12' - 0"	11' - 2"	10' - 6"	12' - 0"	12' - 0"	12' - 0"	12' - 0"
110	10' - 0"	10' - 0"	9' - 4"	8' - 7"	12' - 0"	11' - 8"	10' - 10"	10' - 2"	12' - 0"	12' - 0"	12' - 0"	12' - 0"
120	10' - 0"	9' - 9"	9' - 0"	8' - 2"	12' - 0"	11' - 4"	10' - 6"	9' - 11"	12' - 0"	12' - 0"	12' - 0"	12' - 0"
130	10' - 0"	9' - 6"	8' - 7"	7' - 10"	12' - 0"	11' - 0"	10' - 3"	9' - 8"	12' - 0"	12' - 0"	12' - 0"	12' - 0"
140	10' - 0"	9' - 3"	8' - 4"	7' - 7"	11' - 10"	10' - 9"	10' - 0"	9' - 5"	12' - 0"	12' - 0"	12' - 0"	11' - 11"
150	10' - 0"	9' - 0"	8' - 0"	7' - 4"	11' - 7"	10' - 6"	9' - 9"	9' - 2"	12' - 0"	12' - 0"	12' - 0"	11' - 6"

* SEE ADDITIONAL LIMITATIONS FOR MAXIMUM MULLION SPAN ON SHEETS 10, 11, 12 & 13 FOR A MULLION CONNECTION TYPE. MAXIMUM FINAL MULLION SPAN SHALL BE THE MINIMUM VALUE BETWEEN THIS SCHEDULE AND ANY OTHER SCHEDULE GIVEN ON ABOVE MENTIONED SHEETS.

PRODUCT REVISED
as complying with the Florida Building Code
Acceptance No. 08-0902.09
Expiration Date 01/17/2011
By _____
Miami Dade Product Control Division

F.B.C. (HIGH VELOCITY HURRICANE ZONE)

AUG 28 2009

© 2008 TILTECO, INC

TILTECO INC.
TILLIT TESTING & ENGINEERING COMPANY
6355 N.W. 36th. St., Ste. 305, VIRGINIA GARDENS, Fl. 33166
Phone : (305)871-1530. Fax : (305)871-1531
EB-0006719
WALTER A. TILLIT Jr. P.E.
FLORIDA Lic. # 44167

ALUMINUM LOUVER SYSTEM
MODEL FL-D-6

UNITED ENERTECH, INC.
3101 SOUTH ORCHARD KNOB AVE.
CHATTANOOGA, TN, 37407
PHONE: (423)698-7715 FAX: (423)309-2410

REV. No	DESCRIPTION	DATE	REV. No	DESCRIPTION	DATE
1	OLD 05-151	08/21/08	3	-	-
2			4	-	-

DRAWN BY I.A
08/21/08 DATE
08-198 DRAWING No
SHEET 9 OF 13

MAXIMUM MULLION SPAN (L ft) FOR A GIVEN DESIGN LOAD & MULLION SPACING FOR TYPE 1 CONNECTION ✱

W (psf)	MULLION SPACING 3	4	5	6
30	12'- 0"	12'- 0"	12'- 0"	12'- 0"
40	12'- 0"	12'- 0"	12'- 0"	12'- 0"
50	12'- 0"	12'- 0"	12'- 0"	12'- 0"
60	12'- 0"	12'- 0"	12'- 0"	12'- 0"
70	12'- 0"	12'- 0"	12'- 0"	11'- 3"
80	12'- 0"	12'- 0"	11'- 9"	9'- 10"
90	12'- 0"	12'- 0"	10'- 6"	8'- 9"
100	12'- 0"	12'- 0"	9'- 5"	7'- 10"
110	12'- 0"	12'- 0"	8'- 7"	7'- 2"
120	12'- 0"	12'- 0"	7'- 10"	6'- 7"
130	12'- 0"	12'- 0"	7'- 3"	6'- 1"
140	12'- 0"	8'- 5"	6'- 9"	5'- 7"
150	10'- 6"	7'- 10"	6'- 3"	5'- 3"

TYPE 1 CONNECTION TO POURED CONCRETE:
2 -1/2"ø KWIK BOLT TZ (HILTI, INC.) W/ 4" Min. EMBEDMENT & 8" MIN. MEMBER THICKNESS. W/ 3" MIN. E.D & 6" MIN. SPACING

MAXIMUM MULLION SPAN (L ft) FOR A GIVEN DESIGN LOAD & MULLION SPACING FOR TYPE 2 CONNECTION ✱

W (psf)	MULLION SPACING 3	4	5	6
30	12'- 0"	12'- 0"	12'- 0"	12'- 0"
40	12'- 0"	12'- 0"	12'- 0"	12'- 0"
50	12'- 0"	12'- 0"	12'- 0"	12'- 0"
60	12'- 0"	12'- 0"	12'- 0"	12'- 0"
70	12'- 0"	12'- 0"	12'- 0"	12'- 0"
80	12'- 0"	12'- 0"	12'- 0"	11'- 3"
90	12'- 0"	12'- 0"	12'- 0"	10'- 0"
100	12'- 0"	12'- 0"	10'- 10"	9'- 0"
110	12'- 0"	12'- 0"	9'- 10"	8'- 2"
120	12'- 0"	11'- 3"	9'- 0"	7'- 6"
130	12'- 0"	10'- 5"	8'- 4"	6'- 11"
140	12'- 0"	9'- 8"	7'- 9"	6'- 5"
150	12'- 0"	9'- 0"	7'- 2"	6'- 0"

TYPE 2 CONNECTION TO POURED CONCRETE:
2 -5/8"ø KWIK BOLT TZ (HILTI, INC.) W/ 5" Min. EMBEDMENT & 8" MIN. MEMBER THICKNESS. W/ 3" MIN. E.D & 6" MIN. SPACING

MAXIMUM MULLION SPAN (L ft) FOR A GIVEN DESING LOAD & MULLION SPACING FOR TYPE 3 CONNECTION ✱

W (psf)	MULLION SPACING 3	4	5	6
30	12'- 0"	12'- 0"	12'- 0"	12'- 0"
40	12'- 0"	12'- 0"	12'- 0"	12'- 0"
50	12'- 0"	12'- 0"	12'- 0"	12'- 0"
60	12'- 0"	12'- 0"	12'- 0"	12'- 0"
70	12'- 0"	12'- 0"	12'- 0"	12'- 0"
80	12'- 0"	12'- 0"	12'- 0"	11'- 9"
90	12'- 0"	12'- 0"	12'- 0"	10'- 5"
100	12'- 0"	12'- 0"	11'- 3"	9'- 5"
110	12'- 0"	12'- 0"	10'- 3"	8'- 6"
120	12'- 0"	11'- 9"	9'- 5"	7'- 10"
130	12'- 0"	10'- 10"	8'- 8"	7'- 3"
140	12'- 0"	10'- 1"	8'- 0"	6'- 8"
150	12'- 0"	9'- 5"	7'- 6"	6'- 3"

TYPE 3 CONNECTION TO POURED CONCRETE:
2 -3/4"ø KWIK BOLT TZ (HILTI, INC.) W/ 5" Min. EMBEDMENT & 8" MIN. MEMBER THICKNESS. W/ 3" MIN. E.D & 6" MIN. SPACING

MAXIMUM MULLION SPAN (L ft) FOR A GIVEN DESIGN LOAD & MULLION SPACING FOR TYPE 4 CONNECTION ✱

W (psf)	MULLION SPACING 3	4	5	6
30	12'- 0"	12'- 0"	12'- 0"	12'- 0"
40	12'- 0"	12'- 0"	12'- 0"	12'- 0"
50	12'- 0"	12'- 0"	12'- 0"	12'- 0"
60	12'- 0"	12'- 0"	12'- 0"	12'- 0"
70	12'- 0"	12'- 0"	12'- 0"	12'- 0"
80	12'- 0"	12'- 0"	12'- 0"	12'- 0"
90	12'- 0"	12'- 0"	12'- 0"	11'- 0"
100	12'- 0"	12'- 0"	11'- 10"	9'- 10"
110	12'- 0"	12'- 0"	10'- 9"	9'- 0"
120	12'- 0"	12'- 0"	9'- 10"	8'- 3"
130	12'- 0"	11'- 5"	9'- 1"	7'- 7"
140	12'- 0"	10'- 7"	8'- 6"	7'- 1"
150	12'- 0"	9'- 10"	7'- 11"	6'- 7"

TYPE 4 CONNECTION TO POURED CONCRETE:
2 -M16 HSL-3 HEAVY DUTY (HILTI, INC) W/ 5" MIN. EMBEDMENT & 8" MIN. MEMBER THICKNESS. W/ 3" MIN. E.D & 6" MIN. SPACING

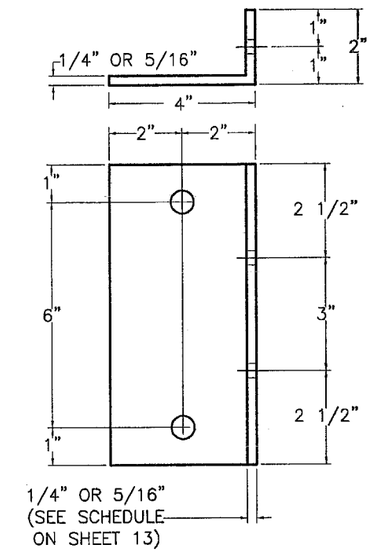

2"x4"xVARIESx0'-8"
ALUMINUM ANGLE

MAXIMUM MULLION SPAN (L ft) FOR A GIVEN DESIGN LOAD & MULLION SPACING FOR TYPE 5 CONNECTION ✱

W (psf)	MULLION SPACING 3	4	5	6
30	12'- 0"	12'- 0"	12'- 0"	12'- 0"
40	12'- 0"	12'- 0"	12'- 0"	12'- 0"
50	12'- 0"	12'- 0"	12'- 0"	12'- 0"
60	12'- 0"	12'- 0"	12'- 0"	12'- 0"
70	12'- 0"	12'- 0"	12'- 0"	11'- 11"
80	12'- 0"	12'- 0"	12'- 0"	10'- 5"
90	12'- 0"	12'- 0"	11'- 1"	9'- 3"
100	12'- 0"	12'- 0"	10'- 0"	8'- 4"
110	12'- 0"	11'- 4"	9'- 1"	7'- 7"
120	12'- 0"	10'- 5"	8'- 4"	6'- 11"
130	12'- 0"	9'- 7"	7'- 8"	6'- 5"
140	11'- 11"	8'- 11"	7'- 2"	5'- 11"
150	11'- 1"	8'- 4"	6'- 8"	5'- 7"

TYPE 5 CONNECTION TO POURED CONCRETE:
2 -1/2"ø KWIK BOLT TZ (HILTI, INC.) W/ 4" Min. EMBEDMENT & 8" MIN. MEMBER THICKNESS. W/ 4" MIN. E.D & 6" MIN. SPACING

MAXIMUM MULLION SPAN (L ft) FOR A GIVEN DESIGN LOAD & MULLION SPACING FOR TYPE 6 CONNECTION ✱

W (psf)	MULLION SPACING 3	4	5	6
30	12'- 0"	12'- 0"	12'- 0"	12'- 0"
40	12'- 0"	12'- 0"	12'- 0"	12'- 0"
50	12'- 0"	12'- 0"	12'- 0"	12'- 0"
60	12'- 0"	12'- 0"	12'- 0"	12'- 0"
70	12'- 0"	12'- 0"	12'- 0"	12'- 0"
80	12'- 0"	12'- 0"	12'- 0"	11'- 10"
90	12'- 0"	12'- 0"	12'- 0"	10'- 7"
100	12'- 0"	12'- 0"	11'- 5"	9'- 6"
110	12'- 0"	12'- 0"	10'- 4"	8'- 8"
120	12'- 0"	11'- 10"	9'- 6"	7'- 11"
130	12'- 0"	11'- 0"	8'- 9"	7'- 4"
140	12'- 0"	10'- 2"	8'- 2"	6'- 9"
150	12'- 0"	9'- 6"	7'- 7"	6'- 4"

TYPE 6 CONNECTION TO POURED CONCRETE:
2 -5/8"ø KWIK BOLT TZ (HILTI, INC.) W/ 5" Min. EMBEDMENT & 8" MIN. MEMBER THICKNESS. W/ 4" MIN. E.D & 6" MIN. SPACING

MAXIMUM MULLION SPAN (L ft) FOR A GIVEN DESIGN LOAD & MULLION SPACING FOR TYPE 7 CONNECTION ✱

W (psf)	MULLION SPACING 3	4	5	6
30	12'- 0"	12'- 0"	12'- 0"	12'- 0"
40	12'- 0"	12'- 0"	12'- 0"	12'- 0"
50	12'- 0"	12'- 0"	12'- 0"	12'- 0"
60	12'- 0"	12'- 0"	12'- 0"	12'- 0"
70	12'- 0"	12'- 0"	12'- 0"	12'- 0"
80	12'- 0"	12'- 0"	12'- 0"	11'- 10"
90	12'- 0"	12'- 0"	12'- 0"	11'- 0"
100	12'- 0"	12'- 0"	11'- 10"	9'- 10"
110	12'- 0"	12'- 0"	10'- 9"	9'- 0"
120	12'- 0"	12'- 0"	9'- 10"	8'- 3"
130	12'- 0"	11'- 5"	9'- 1"	7'- 7"
140	12'- 0"	10'- 7"	8'- 6"	7'- 1"
150	12'- 0"	9'- 10"	7'- 11"	6'- 7"

TYPE 7 CONNECTION TO POURED CONCRETE:
2 -3/4"ø KWIK BOLT TZ (HILTI, INC.) W/ 5" Min. EMBEDMENT & 8" MIN. MEMBER THICKNESS. W/ 4" MIN. E.D & 6" MIN. SPACING

MAXIMUM MULLION SPAN (L ft) FOR A GIVEN DESIGN LOAD & MULLION SPACING FOR TYPE 8 CONNECTION ✱

W (psf)	MULLION SPACING 3	4	5	6
30	12'- 0"	12'- 0"	12'- 0"	12'- 0"
40	12'- 0"	12'- 0"	12'- 0"	12'- 0"
50	12'- 0"	12'- 0"	12'- 0"	12'- 0"
60	12'- 0"	12'- 0"	12'- 0"	12'- 0"
70	12'- 0"	12'- 0"	12'- 0"	12'- 0"
80	12'- 0"	12'- 0"	12'- 0"	12'- 0"
90	12'- 0"	12'- 0"	12'- 0"	11'- 6"
100	12'- 0"	12'- 0"	12'- 0"	10'- 4"
110	12'- 0"	12'- 0"	11'- 4"	9'- 5"
120	12'- 0"	12'- 0"	10'- 4"	8'- 8"
130	12'- 0"	12'- 0"	9'- 7"	8'- 0"
140	12'- 0"	11'- 1"	8'- 11"	7'- 5"
150	12'- 0"	10'- 4"	8'- 4"	6'- 11"

TYPE 8 CONNECTION TO POURED CONCRETE:
2 -M16 HSL-3 HEAVY DUTY (HILTI, INC) W/ 5" MIN. EMBEDMENT & 8" MIN. MEMBER THICKNESS. W/ 4" MIN. E.D & 6" MIN. SPACING

MAXIMUM MULLION SPAN (L ft) FOR A GIVEN DESIGN LOAD & MULLION SPACING FOR TYPE 9 CONNECTION ✱

W (psf)	MULLION SPACING 3	4	5	6
30	12'- 0"	12'- 0"	12'- 0"	12'- 0"
40	12'- 0"	12'- 0"	12'- 0"	12'- 0"
50	12'- 0"	12'- 0"	12'- 0"	12'- 0"
60	12'- 0"	12'- 0"	12'- 0"	12'- 0"
70	12'- 0"	12'- 0"	12'- 0"	12'- 0"
80	12'- 0"	12'- 0"	12'- 0"	11'- 3"
90	12'- 0"	12'- 0"	12'- 0"	10'- 0"
100	12'- 0"	12'- 0"	10'- 10"	9'- 0"
110	12'- 0"	12'- 0"	9'- 10"	8'- 2"
120	12'- 0"	11'- 3"	9'- 0"	7'- 6"
130	12'- 0"	10'- 5"	8'- 4"	6'- 11"
140	12'- 0"	9'- 8"	7'- 9"	6'- 5"
150	12'- 0"	9'- 0"	7'- 2"	6'- 0"

TYPE 9 CONNECTION TO POURED CONCRETE:
2 -1/2"ø KWIK BOLT TZ (HILTI, INC.) W/ 4" Min. EMBEDMENT & 8" MIN. MEMBER THICKNESS. W/ 6" MIN. E.D & 6" MIN. SPACING

MAXIMUM MULLION SPAN (L ft) FOR A GIVEN DESIGN LOAD & MULLION SPACING FOR TYPE 10 CONNECTION ✱

W (psf)	MULLION SPACING 3	4	5	6
30	12'- 0"	12'- 0"	12'- 0"	12'- 0"
40	12'- 0"	12'- 0"	12'- 0"	12'- 0"
50	12'- 0"	12'- 0"	12'- 0"	12'- 0"
60	12'- 0"	12'- 0"	12'- 0"	12'- 0"
70	12'- 0"	12'- 0"	12'- 0"	12'- 0"
80	12'- 0"	12'- 0"	12'- 0"	12'- 0"
90	12'- 0"	12'- 0"	12'- 0"	12'- 0"
100	12'- 0"	12'- 0"	12'- 0"	11'- 0"
110	12'- 0"	12'- 0"	12'- 0"	10'- 0"
120	12'- 0"	12'- 0"	11'- 0"	9'- 2"
130	12'- 0"	12'- 0"	10'- 2"	8'- 6"
140	12'- 0"	11'- 9"	9'- 5"	7'- 10"
150	12'- 0"	11'- 0"	8'- 10"	7'- 4"

TYPE 10 CONNECTION TO POURED CONCRETE:
2 -5/8"ø KWIK BOLT TZ (HILTI, INC.) W/ 5" Min. EMBEDMENT & 8" MIN. MEMBER THICKNESS. W/ 6.75" MIN. E.D & 6" MIN. SPACING

MAXIMUM MULLION SPAN (L ft) FOR A GIVEN DESIGN LOAD & MULLION SPACING FOR TYPE 11 CONNECTION ✱

W (psf)	MULLION SPACING 3	4	5	6
30	12'- 0"	12'- 0"	12'- 0"	12'- 0"
40	12'- 0"	12'- 0"	12'- 0"	12'- 0"
50	12'- 0"	12'- 0"	12'- 0"	12'- 0"
60	12'- 0"	12'- 0"	12'- 0"	12'- 0"
70	12'- 0"	12'- 0"	12'- 0"	12'- 0"
80	12'- 0"	12'- 0"	12'- 0"	12'- 0"
90	12'- 0"	12'- 0"	12'- 0"	12'- 0"
100	12'- 0"	12'- 0"	12'- 0"	12'- 0"
110	12'- 0"	12'- 0"	12'- 0"	12'- 0"
120	12'- 0"	12'- 0"	12'- 0"	11'- 3"
130	12'- 0"	12'- 0"	12'- 0"	10'- 5"
140	12'- 0"	12'- 0"	11'- 7"	9'- 8"
150	12'- 0"	12'- 0"	10'- 10"	9'- 0"

TYPE 11 CONNECTION TO POURED CONCRETE:
2 -M16 HSL-3 HEAVY DUTY (HILTI, INC) W/ 5" MIN. EMBEDMENT & 8" MIN. MEMBER THICKNESS. W/ 10" MIN. E.D & 6" MIN. SPACING

SCHEDULE FOR MULLION CONNECTION TO POURED CONCRETE

PRODUCT REVISED
as complying with the Florida Building Code
Acceptance No. 08-0902.09
Expiration Date 2/11/2010
By
Miami Dade Product Control Division

F.B.C. (HIGH VELOCITY HURRICANE ZONE)

*** NOTES:**

(1) SEE SHEET 9 FOR ADDITIONAL MAXIMUM MULLION SPAN LIMITATIONS FOR A GIVEN DESIGN LOAD AND MAXIMUM SPACING. MAXIMUM MULLION SPAN SHALL BE THE MINIMUM BETWEEN THE TWO SCHEDULES FOR A CONNECTION TYPE.

(2) SEE SHEET 13 FOR ANGLE SCHEDULE INDICATING MAXIMUM ALLOWABLE DESIGN LOAD, MULLION SPACING AND MULLION SPAN FOR 1/4" THICK & 5/16" THICK ALUMINUM ANGLES USED TOP & BOTTOM FOR MULLION CONNECTION TO SUBSTRATE.

AUG 28 2008

© 2008 TILTECO, INC

TILTECO INC.
TILLIT TESTING & ENGINEERING COMPANY
6355 N.W. 36th. St., Ste. 305, VIRGINIA GARDENS, FL 33166
Phone : (305)871-1530. Fax : (305)871-1531
EB-0006719
WALTER A. TILLIT Jr. P.E.
FLORIDA Lic. # 44167

ALUMINUM LOUVER SYSTEM
MODEL FL-D-6

UNITED ENERTECH, INC.
3101 SOUTH ORCHARD KNOB AVE.
CHATTANOOGA, TN, 37407
PHONE: (423)698-7715 FAX: (423)309-2410

REV. No	DESCRIPTION	DATE	REV. No	DESCRIPTION	DATE
1	OLD 05-151	08/21/08	3	–	–
2			4	–	–

DRAWN BY I.A
08/21/08 DATE
08-198 DRAWING No
SHEET 10 OF 13

MAXIMUM MULLION SPAN (L ft) FOR A GIVEN DESIGN LOAD & MULLION SPACING FOR TYPE 12 CONNECTION *

W (psf)	MULLION SPACING 3	4	5	6
50	6'- 6"	4'- 10"	3'- 11"	3'- 3"
60	5'- 0"	4'- 1"	3'- 3"	2'- 8"
70	4'- 0"	3'- 6"	2'- 9"	2'- 4"
80	4'- 0"	3'- 0"	2'- 5"	2'- 0"
90	3'- 0"	2'- 8"	2'- 2"	1'- 10"

TYPE 12 CONNECTION W/ 1/4" THICK ALUMINUM ANGLE TO WOOD
4 -3/8"ø LAG SCREWS W/ 1.5" Min. THREADED PENETRATION W/ 2" E.D & 2" SPACING

MAXIMUM MULLION SPAN (L ft) FOR A GIVEN DESIGN LOAD & MULLION SPACING FOR TYPE 13 CONNECTION *

W (psf)	MULLION SPACING 3	4	5	6
50	12'- 0"	9'- 11"	7'- 11"	6'- 7"
60	11'- 0"	8'- 3"	6'- 7"	5'- 6"
70	9'- 0"	7'- 1"	5'- 8"	4'- 9"
80	8'- 0"	6'- 2"	4'- 11"	4'- 2"
90	7'- 0"	5'- 6"	4'- 5"	3'- 8"
55	**12'- 0"**	**9'- 0"**	**7'- 2"**	**6'- 0"**

TYPE 13 CONNECTION W/ 1/4" THICK ALUMINUM ANGLE TO WOOD
4 -3/8"ø LAG SCREWS W/ 3" Min. THREADED PENETRATION W/ 2" E.D & 2" SPACING

MAXIMUM MULLION SPAN (L ft) FOR A GIVEN DESIGN LOAD & MULLION SPACING FOR TYPE 14 CONNECTION *

W (psf)	MULLION SPACING 3	4	5	6
50	7'- 2"	5'- 5"	4'- 4"	3'- 7"
60	6'- 0"	4'- 6"	3'- 7"	3'- 0"
70	5'- 0"	3'- 10"	3'- 1"	2'- 7"
80	4'- 0"	3'- 5"	2'- 8"	2'- 3"
90	4'- 0"	3'- 0"	2'- 5"	2'- 0"

TYPE 14 CONNECTION W/ 5/16" THICK ALUMINUM ANGLE TO WOOD
4 -3/8"ø LAG SCREWS W/ 1.5" Min. THREADED PENETRATION W/ 2" E.D & 2" SPACING

MAXIMUM MULLION SPAN (L ft) FOR A GIVEN DESIGN LOAD & MULLION SPACING FOR TYPE 15 CONNECTION *

W (psf)	MULLION SPACING 3	4	5	6
50	12'- 0"	10'- 10"	8'- 8"	7'- 2"
60	12'- 0"	9'- 0"	7'- 2"	6'- 0"
70	10'- 0"	7'- 9"	6'- 2"	5'- 2"
80	9'- 0"	6'- 9"	5'- 5"	4'- 6"
90	8'- 0"	6'- 0"	4'- 10"	4'- 0"
60	**12'- 0"**	**9'- 0"**	**7'- 2"**	**6'- 0"**

TYPE 15 CONNECTION W/ 5/16" THICK ALUMINUM ANGLE TO WOOD
4 -3/8"ø LAG SCREWS W/ 3" Min. THREADED PENETRATION W/ 2" E.D & 2" SPACING

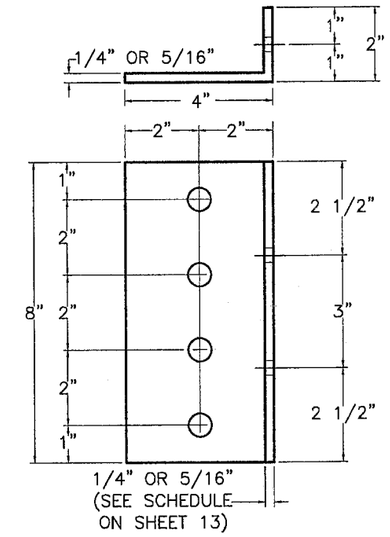

2"x4"xVARIESx0'-8" ALUMINUM ANGLE

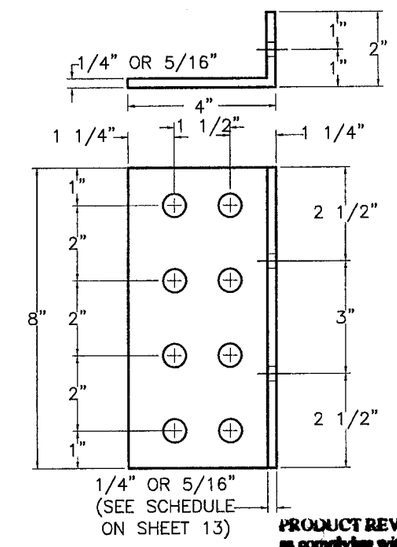

2"x4"xVARIESx0'-8" ALUMINUM ANGLE

MAXIMUM MULLION SPAN (L ft) FOR A GIVEN DESIGN LOAD & MULLION SPACING FOR TYPE 16 CONNECTION *

W (psf)	MULLION SPACING 3	4	5	6
50	12'- 0"	9'- 4"	7'- 6"	6'- 3"
60	10'- 0"	7'- 10"	6'- 3"	5'- 2"
70	8'- 0"	6'- 8"	5'- 4"	4'- 5"
80	7'- 0"	5'- 10"	4'- 8"	3'- 11"
90	6'- 0"	5'- 2"	4'- 2"	3'- 6"
52	**12'- 0"**	**9'- 0"**	**7'- 2"**	**6'- 0"**

TYPE 16 CONNECTION W/ 1/4" THICK ALUMINUM ANGLE TO WOOD
8 -3/8"ø LAG SCREWS W/ 1.5" Min. THREADED PENETRATION W/ 1.25" E.D & 2" SPACING

MAXIMUM MULLION SPAN (L ft) FOR A GIVEN DESIGN LOAD & MULLION SPACING FOR TYPE 17 CONNECTION *

W (psf)	MULLION SPACING 3	4	5	6
50	12'- 0"	12'- 0"	12'- 0"	12'- 0"
60	12'- 0"	12'- 0"	12'- 0"	10'- 6"
70	12'- 0"	12'- 0"	10'- 10"	9'- 0"
80	12'- 0"	11'- 10"	9'- 5"	7'- 11"
90	12'- 0"	10'- 6"	8'- 5"	7'- 0"
105	**12'- 0"**	**9'- 0"**	**7'- 2"**	**6'- 0"**

TYPE 17 CONNECTION W/ 1/4" THICK ALUMINUM ANGLE TO WOOD
8 -3/8"ø LAG SCREWS W/ 3" Min. THREADED PENETRATION W/ 1.25" E.D & 2" SPACING

MAXIMUM MULLION SPAN (L ft) FOR A GIVEN DESIGN LOAD & MULLION SPACING FOR TYPE 18 CONNECTION *

W (psf)	MULLION SPACING 3	4	5	6
50	12'- 0"	9'- 9"	7'- 9"	6'- 6"
60	10'- 0"	8'- 1"	6'- 6"	5'- 5"
70	9'- 0"	6'- 11"	5'- 7"	4'- 8"
80	8'- 0"	6'- 1"	4'- 10"	4'- 1"
90	7'- 0"	5'- 5"	4'- 4"	3'- 7"
54	**12'- 0"**	**9'- 0"**	**7'- 2"**	**6'- 0"**

TYPE 18 CONNECTION W/ 5/16" THICK ALUMINUM ANGLE TO WOOD
8 -3/8"ø LAG SCREWS W/ 1.5" Min. THREADED PENETRATION W/ 1.25" E.D & 2" SPACING

MAXIMUM MULLION SPAN (L ft) FOR A GIVEN DESIGN LOAD & MULLION SPACING FOR TYPE 19 CONNECTION *

W (psf)	MULLION SPACING 3	4	5	6
50	12'- 0"	12'- 0"	12'- 0"	12'- 0"
60	12'- 0"	12'- 0"	12'- 0"	12'- 0"
70	12'- 0"	12'- 0"	12'- 0"	10'- 5"
80	12'- 0"	12'- 0"	11'- 0"	9'- 2"
90	12'- 0"	12'- 0"	9'- 9"	8'- 2"
122	**12'- 0"**	**9'- 0"**	**7'- 2"**	**6'- 0"**

TYPE 19 CONNECTION W/ 5/16" THICK ALUMINUM ANGLE TO WOOD
8 -3/8"ø LAG SCREWS W/ 3" Min. THREADED PENETRATION W/ 1.25" E.D & 2" SPACING

SCHEDULE FOR MULLION CONNECTION TO WOOD

PRODUCT REVISED
as complying with the Florida Building Code
Acceptance No 08-0902.09
Expiration Date 01/07/2011
By _____
Miami Dade Product Control Division

*** NOTES:**

(1) SEE SHEET 9 FOR ADDITIONAL MAXIMUM MULLION SPAN LIMITATIONS FOR A GIVEN DESIGN LOAD AND MAXIMUM SPACING. MAXIMUM MULLION SPAN SHALL BE THE MINIMUM BETWEEN THE TWO SCHEDULES FOR A CONNECTION TYPE.

(2) SEE SHEET 13 FOR ANGLE SCHEDULE INDICATING MAXIMUM ALLOWABLE DESIGN LOAD, MULLION SPACING AND MULLION SPAN FOR 1/4" THICK & 5/16" THICK ALUMINUM ANGLES USED TOP & BOTTOM FOR MULLION CONNECTION TO SUBSTRATE.

AUG 8 9 2008

F.B.C. (HIGH VELOCITY HURRICANE ZONE)

© 2008 TILTECO, INC

TILTECO INC.
TILLIT TESTING & ENGINEERING COMPANY
6355 N.W. 36th. St., Ste. 305, VIRGINIA GARDENS, FL 33166
Phone : (305)871-1530. Fax : (305)871-1531
EB-0006719
WALTER A. TILLIT Jr. P.E.
FLORIDA Lic. # 44167

ALUMINUM LOUVER SYSTEM
MODEL FL-D-6

UNITED ENERTECH, INC.
3101 SOUTH ORCHARD KNOB AVE.
CHATTANOOGA, TN, 37407
PHONE: (423)698-7715 FAX: (423)309-2410

REV. No	DESCRIPTION	DATE	REV. No	DESCRIPTION	DATE
1	OLD 05-151	08/21/08	3	-	-
2			4	-	-

DRAWN BY I.A
08/21/08 DATE
08-198 DRAWING No
SHEET 11 OF 13

MAXIMUM MULLION SPAN (L ft) FOR A GIVEN DESIGN LOAD & MULLION SPACING FOR TYPE 20 CONNECTION

W (psf)	MULLION SPACING 3	4	5	6
30	12'- 0"	12'- 0"	12'- 0"	12'- 0"
40	12'- 0"	12'- 0"	12'- 0"	12'- 0"
50	12'- 0"	12'- 0"	12'- 0"	12'- 0"
60	12'- 0"	12'- 0"	12'- 0"	12'- 0"
70	12'- 0"	12'- 0"	12'- 0"	12'- 0"
80	12'- 0"	12'- 0"	12'- 0"	12'- 0"
90	12'- 0"	12'- 0"	12'- 0"	12'- 0"
100	12'- 0"	12'- 0"	12'- 0"	11'- 9"
110	12'- 0"	12'- 0"	12'- 0"	10'- 8"
120	12'- 0"	12'- 0"	11'- 9"	9'- 9"
130	12'- 0"	12'- 0"	10'- 10"	9'- 0"
140	12'- 0"	12'- 0"	10'- 1"	8'- 5"
150	12'- 0"	11'- 9"	9'- 5"	7'- 10"

TYPE 20 CONNECTION W/ 1/4" THICK ALUMINUM ANGLE* TO STEEL
4 -3/8"ø-16 MACHINE SCREWS W/ 3/4" E.D.
& W/ 1/8" MIN. MEMBER THICKNESS

MAXIMUM MULLION SPAN (L ft) FOR A GIVEN DESIGN LOAD & MULLION SPACING FOR TYPE 21 CONNECTION

W (psf)	MULLION SPACING 3	4	5	6
30	12'- 0"	12'- 0"	12'- 0"	12'- 0"
40	12'- 0"	12'- 0"	12'- 0"	12'- 0"
50	12'- 0"	12'- 0"	12'- 0"	12'- 0"
60	12'- 0"	12'- 0"	12'- 0"	12'- 0"
70	12'- 0"	12'- 0"	12'- 0"	12'- 0"
80	12'- 0"	12'- 0"	12'- 0"	12'- 0"
90	12'- 0"	12'- 0"	12'- 0"	12'- 0"
100	12'- 0"	12'- 0"	12'- 0"	11'- 9"
110	12'- 0"	12'- 0"	12'- 0"	10'- 8"
120	12'- 0"	12'- 0"	11'- 9"	9'- 9"
130	12'- 0"	12'- 0"	10'- 10"	9'- 0"
140	12'- 0"	12'- 0"	10'- 1"	8'- 5"
150	12'- 0"	11'- 9"	9'- 5"	7'- 10"

TYPE 21 CONNECTION W/ 5/16" THICK ALUMINUM ANGLE* TO STEEL
4 -3/8"ø-16 MACHINE SCREWS W/ 3/4" E.D.
& W/ 1/8" MIN. MEMBER THICKNESS

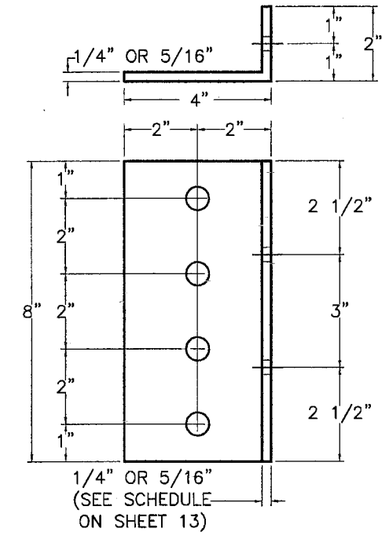

2"x4"xVARIESx0'-8" ALUMINUM ANGLE

MAXIMUM MULLION SPAN (L ft) FOR A GIVEN DESIGN LOAD & MULLION SPACING FOR TYPE 22 CONNECTION

W (psf)	MULLION SPACING 3	4	5	6
30	12'- 0"	12'- 0"	12'- 0"	12'- 0"
40	12'- 0"	12'- 0"	12'- 0"	12'- 0"
50	12'- 0"	12'- 0"	12'- 0"	12'- 0"
60	12'- 0"	12'- 0"	12'- 0"	12'- 0"
70	12'- 0"	12'- 0"	12'- 0"	12'- 0"
80	12'- 0"	12'- 0"	12'- 0"	12'- 0"
90	12'- 0"	12'- 0"	12'- 0"	12'- 0"
100	12'- 0"	12'- 0"	12'- 0"	12'- 0"
110	12'- 0"	12'- 0"	12'- 0"	12'- 0"
120	12'- 0"	12'- 0"	12'- 0"	12'- 0"
130	12'- 0"	12'- 0"	12'- 0"	12'- 0"
140	12'- 0"	12'- 0"	12'- 0"	12'- 0"
150	12'- 0"	12'- 0"	12'- 0"	12'- 0"

TYPE 22 CONNECTION W/ 1/4" THICK ALUMINUM ANGLE* TO STEEL
8 -3/8"ø-16 MACHINE SCREWS W/ 3/4" E.D.
& W/ 1/8" MIN. MEMBER THICKNESS

MAXIMUM MULLION SPAN (L ft) FOR A GIVEN DESIGN LOAD & MULLION SPACING FOR TYPE 23 CONNECTION

W (psf)	MULLION SPACING 3	4	5	6
30	12'- 0"	12'- 0"	12'- 0"	12'- 0"
40	12'- 0"	12'- 0"	12'- 0"	12'- 0"
50	12'- 0"	12'- 0"	12'- 0"	12'- 0"
60	12'- 0"	12'- 0"	12'- 0"	12'- 0"
70	12'- 0"	12'- 0"	12'- 0"	12'- 0"
80	12'- 0"	12'- 0"	12'- 0"	12'- 0"
90	12'- 0"	12'- 0"	12'- 0"	12'- 0"
100	12'- 0"	12'- 0"	12'- 0"	12'- 0"
110	12'- 0"	12'- 0"	12'- 0"	12'- 0"
120	12'- 0"	12'- 0"	12'- 0"	12'- 0"
130	12'- 0"	12'- 0"	12'- 0"	12'- 0"
140	12'- 0"	12'- 0"	12'- 0"	12'- 0"
150	12'- 0"	12'- 0"	12'- 0"	12'- 0"

TYPE 23 CONNECTION W/ 5/16" THICK ALUMINUM ANGLE* TO STEEL
8 -3/8"ø-16 MACHINE SCREWS W/ 3/4" E.D.
& W/ 1/8" MIN. MEMBER THICKNESS

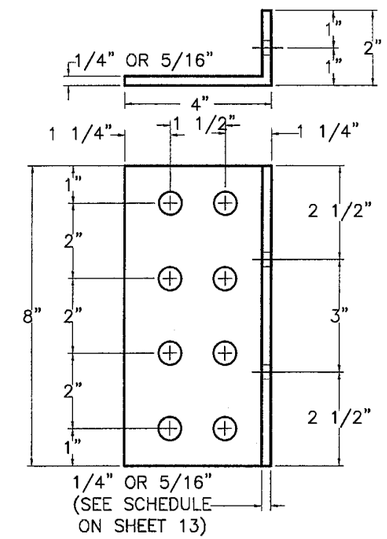

2"x4"xVARIESx0'-8" ALUMINUM ANGLE

SCHEDULE FOR MULLION CONNECTION TO STEEL

PRODUCT REVISED
as complying with the Florida Building Code
Acceptance No 08-0902.09
Expiration Date 01/17/2011
By
Miami Dade Product Control Division

*** NOTES:**

(1) SEE SHEET 9 FOR ADDITIONAL MAXIMUM MULLION SPAN LIMITATIONS FOR A GIVEN DESIGN LOAD AND MAXIMUM SPACING. MAXIMUM MULLION SPAN SHALL BE THE MINIMUM BETWEEN THE TWO SCHEDULES FOR A CONNECTION TYPE.

(2) SEE SHEET 13 FOR ANGLE SCHEDULE INDICATING MAXIMUM ALLOWABLE DESIGN LOAD, MULLION SPACING AND MULLION SPAN FOR 1/4" THICK & 5/16" THICK ALUMINUM ANGLES USED TOP & BOTTOM FOR MULLION CONNECTION TO SUBSTRATE.

F.B.C. (HIGH VELOCITY HURRICANE ZONE)

AUG 2 8 2008

© 2008 TILTECO, INC

TILTECO INC.
TILLIT TESTING & ENGINEERING COMPANY
6355 N.W. 36th. St., Ste. 305, VIRGINIA GARDENS, Fl. 33166
Phone : (305)871-1530. Fax : (305)871-1531
EB-0006719
WALTER A. TILLIT Jr. P.E.
FLORIDA Lic. # 44167

ALUMINUM LOUVER SYSTEM
MODEL FL-D-6

UNITED ENERTECH, INC.
3101 SOUTH ORCHARD KNOB AVE.
CHATTANOOGA, TN, 37407
PHONE: (423)698-7715 FAX: (423)309-2410

REV. No	DESCRIPTION	DATE	REV. No	DESCRIPTION	DATE
1	OLD 05-151	08/21/08	3	-	-
2			4	-	-

DRAWN BY I.A
08/21/08 DATE
08-198 DRAWING No
SHEET 12 OF 13

SCHEDULE FOR MAXIMUM MULLION SPAN FOR A GIVEN DESIGN LOAD AND MULLION SPACING IN ORDER TO USE 1/4" THICK ALUMINUM ANGLE FOR MULLION CONNECTION TO SUBSTRATE

W (psf)	MULLION SPACING (ft)			
	3	4	5	6
30	12 '- 0 "	12 '- 0 "	12 '- 0 "	12 '- 0 "
40	12 '- 0 "	12 '- 0 "	12 '- 0 "	12 '- 0 "
50	12 '- 0 "	12 '- 0 "	12 '- 0 "	12 '- 0 "
60	12 '- 0 "	12 '- 0 "	12 '- 0 "	12 '- 0 "
70	12 '- 0 "	12 '- 0 "	12 '- 0 "	12 '- 0 "
80	12 '- 0 "	12 '- 0 "	12 '- 0 "	11 '- 3 "
90	12 '- 0 "	12 '- 0 "	12 '- 0 "	10 '- 0 "
100	12 '- 0 "	12 '- 0 "	10 '- 10 "	9 '- 0 "
110	12 '- 0 "	12 '- 0 "	9 '- 10 "	8 '- 2 "
120	12 '- 0 "	11 '- 3 "	9 '- 0 "	7 '- 6 "
130	12 '- 0 "	10 '- 5 "	8 '- 4 "	6 '- 11 "
140	12 '- 0 "	9 '- 8 "	7 '- 9 "	6 '- 5 "
150	12 '- 0 "	9 '- 0 "	7 '- 2 "	6 '- 0 "

* NOTES:

(1) ANY MULLION SPACING OR MULLION SPAN LARGER THAN THE ONES INCLUDED ON THIS SCHEDULE WILL REQUIRE A 5/16" THICK ALUMINUM ANGLE INSTEAD OF 1/4" THICK ALUMINUM ANGLE

(2) SEE SHEET 9 FOR ADDITIONAL MAXIMUM MULLION SPAN LIMITATIONS FOR A GIVEN DESIGN LOAD AND MAXIMUM SPACING. MAXIMUM MULLION SPAN SHALL BE THE MINIMUM BETWEEN THE TWO SCHEDULES FOR A CONNECTION TYPE.

1/2"ø THRU BOLT REQUIREMENTS FOR CONNECTION OF ALUMINUM ANGLE TO MULLION FOR MULLION END CONNECTION TO SUBSTRATE.

MULLION TYPE	1/2"ø THRU BOLT REQUIRED
2"x6"	(1) REQUIRED
(2) 2"x6"	(2) REQUIRED & (1) EACH TUBE
4"x6" & 4"x8"	(2) REQUIRED

PRODUCT REVISED
as complying with the Florida Building Code
Acceptance No. 08-0902.09
Expiration Date 01/17/2011
By
Miami-Dade Product Control Division

F.B.C. (HIGH VELOCITY HURRICANE ZONE)

© 2008 TILTECO, INC

TILTECO INC.
TILLIT TESTING & ENGINEERING COMPANY
6355 N.W. 36th. St., Ste. 305, VIRGINIA GARDENS, Fl. 33166
Phone : (305)871-1530. Fax : (305)871-1531
EB-0006719
WALTER A. TILLIT Jr. P.E.
FLORIDA Lic. # 44167

AUG 2 0 2008

ALUMINUM LOUVER SYSTEM
MODEL FL-D-6

UNITED ENERTECH, INC.
3101 SOUTH ORCHARD KNOB AVE.
CHATTANOOGA, TN, 37407
PHONE: (423)698-7715 FAX: (423)309-2410

REV. No	DESCRIPTION	DATE	REV. No	DESCRIPTION	DATE
1	OLD 05-151	08/21/08	3	–	–
2			4	–	–

DRAWN BY I.A
08/21/08 DATE
08-198 DRAWING No
SHEET 13 OF 13