MIAMI-DADE

BUILDING CODE COMPLIANCE OFFICE (BCCO)
PRODUCT CONTROL DIVISION

MIAMI-DADE COUNTY, FLORIDA
METRO-DADE FLAGLER BUILDING
140 WEST FLAGLER STREET, SUITE 1603
MIAMI, FLORIDA 33130-1563
(305) 375-2901 FAX (305) 375-2908

NOTICE OF ACCEPTANCE (NOA)

Tamko Building Products, Inc.
P.O. Box 1404
Joplin, MO 64802

SCOPE:
This NOA is being issued under the applicable rules and regulations governing the use of construction materials. The documentation submitted has been reviewed by Miami-Dade County Product Control Division and accepted by the Board of Rules and Appeals (BORA) to be used in Miami Dade County and other areas where allowed by the Authority Having Jurisdiction (AHJ).

This NOA shall not be valid after the expiration date stated below. The Miami-Dade County Product Control Division (In Miami Dade County) and/or the AHJ (in areas other than Miami Dade County) reserve the right to have this product or material tested for quality assurance purposes. If this product or material fails to perform in the accepted manner, the manufacturer will incur the expense of such testing and the AHJ may immediately revoke, modify, or suspend the use of such product or material within their jurisdiction. BORA reserves the right to revoke this acceptance, if it is determined by Miami-Dade County Product Control Division that this product or material fails to meet the requirements of the applicable building code.

This product is approved as described herein, and has been designed to comply with the High Velocity Hurricane Zone of the Florida Building Code.

DESCRIPTION: TAMKO Elite Glass-Seal AR Hip & Ridge Shingles

LABELING: Each unit shall bear a permanent label with the manufacturer's name or logo, city, state and following statement: "Miami-Dade County Product Control Approved", unless otherwise noted herein.

RENEWAL of this NOA shall be considered after a renewal application has been filed and there has been no change in the applicable building code negatively affecting the performance of this product.

TERMINATION of this NOA will occur after the expiration date or if there has been a revision or change in the materials, use, and/or manufacture of the product or process. Misuse of this NOA as an endorsement of any product, for sales, advertising or any other purposes shall automatically terminate this NOA. Failure to comply with any section of this NOA shall be cause for termination and removal of NOA.

ADVERTISEMENT: The NOA number preceded by the words Miami-Dade County, Florida, and followed by the expiration date may be displayed in advertising literature. If any portion of the NOA is displayed, then it shall be done in its entirety.

INSPECTION: A copy of this entire NOA shall be provided to the user by the manufacturer or its distributors and shall be available for inspection at the job site at the request of the Building Official.

This renews NOA#03-0702.03 and consists of pages 1 through 3.
The submitted documentation was reviewed by Alex Tigera.

MIAMI-DADE COUNTY APPROVED

ROOFING ASSEMBLY APPROVAL

Category: Roofing
Sub-Category: 07310 Asphalt Shingles

Materials Asphalt
Deck Type: Wood

1. **SCOPE:**

This approves **Tamko Elite Glass Seal AR Hip & Ridge** Asphalt Shingles, manufactured by **Tamko Building Products, Inc.** as described in this Notice of Acceptance.

2. **PRODUCT DESCRIPTION**

Product	Dimensions	Test Specifications	Product Description
Elite Glass-Seal AR Hip & Ridge Shingles	12" x 36"	TAS 110	A heavy weight, 3-Tab asphalt shingle to be used as a hip & ridge shingle.

3. **EVIDENCE SUBMITTED:**

Test Agency	Test Identifier	Test Name/Report	Date
PRI Asphalt Technologies, Inc.	TAS 100	TAP-071-02-01	04/21/03
Underwriters Laboratories, Inc.	TAS 107	02NK9507	03/06/02
Underwriters Laboratories, Inc.	ASTM D3462	R2919	02/25/02

4. **LIMITATIONS**

4.1 Fire classification is not part of this acceptance; refer to a current Approved Roofing Materials Directory for fire ratings of this product.
4.2 Shall not be installed on roof mean heights in excess of 33 ft.
4.3 All products listed herein shall have a quality assurance audit in accordance with the Florida Building Code and Rule 9B-72 of the Florida Administrative Code.

5. **INSTALLATION**

5.1 Shingles shall be installed in accordance with Roofing Application Standard RAS 115.
5.2 The manufacturer shall provide clearly written application instructions.
5.3 Exposure and course layout shall be in compliance with Detail 'A', attached.
5.4 Nailing shall be in compliance with Detail 'B', attached.

6. **LABELING**

5.1 Shingles shall be labeled with the Miami-Dade Approved Seal as seen below, or the wording "Miami-Dade County- Product Control Approved".

MIAMI-DADE COUNTY APPROVED

7. BUILDING PERMIT REQUIREMENTS

7.1 Application for building permit shall be accompanied by copies of the following:

7.1.1 This Notice of Acceptance.

7.1.2 Any other documents required by the Building Official or the applicable Building Code in order to properly evaluate the installation of this system.

DETAIL A

TAMKO HIP & RIDGE

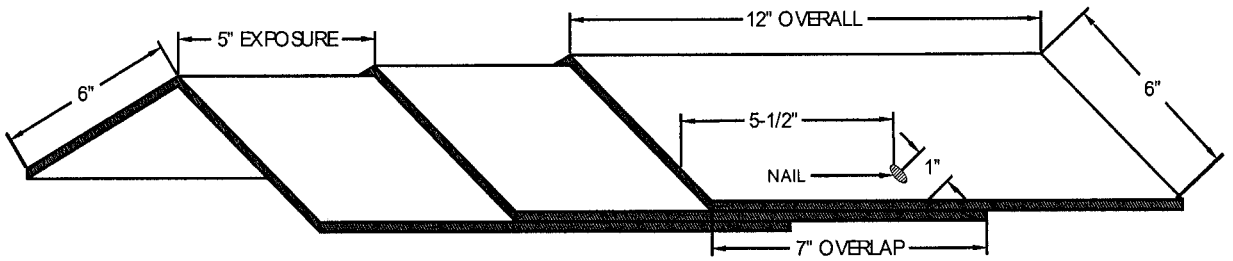

DETAIL B

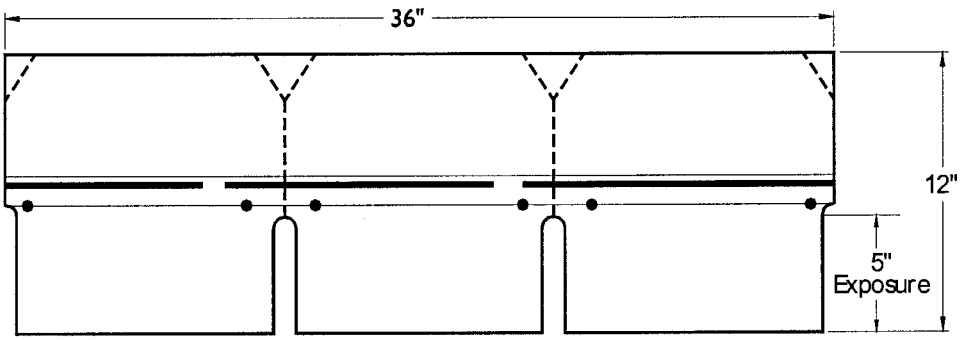

END OF THIS ACCEPTANCE