MIAMI-DADE COUNTY
BUILDING CODE COMPLIANCE OFFICE (BCCO)
PRODUCT CONTROL DIVISION

MIAMI-DADE COUNTY, FLORIDA
METRO-DADE FLAGLER BUILDING

140 WEST FLAGLER STREET, SUITE 1603
MIAMI, FLORIDA 33130-1563
(305) 375-2901 FAX (305) 375-2908
www.miamidade.gov

NOTICE OF ACCEPTANCE (NOA)

Rolladen, Inc.
550 Ansin Boulevard
Hallandale, Florida 33009

SCOPE:
This NOA is being issued under the applicable rules and regulations governing the use of construction materials. The documentation submitted has been reviewed by Miami-Dade County Product Control Division and accepted by the Board of Rules and Appeals (BORA) to be used in Miami Dade County and other areas where allowed by the Authority Having Jurisdiction (AHJ).

This NOA shall not be valid after the expiration date stated below. The Miami-Dade County Product Control Division (In Miami Dade County) and/or the AHJ (in areas other than Miami Dade County) reserve the right to have this product or material tested for quality assurance purposes. If this product or material fails to perform in the accepted manner, the manufacturer will incur the expense of such testing and the AHJ may immediately revoke, modify, or suspend the use of such product or material within their jurisdiction. BORA reserves the right to revoke this acceptance, if it is determined by Miami-Dade County Product Control Division that this product or material fails to meet the requirements of the applicable building code.

This product is approved as described herein, and has been designed to comply with the High Velocity Hurricane Zone of the Florida Building Code.

DESCRIPTION: Aluminum Accordion Shutter

APPROVAL DOCUMENT: Drawing No. 02-22, titled " 4" Blade Accordion Shutter Details ", sheets 1 through 5 of 5, prepared by Al-Farooq Corporation, dated October 29, 2002, last revision #E dated July 07, 2008, signed and sealed by Humayoun Farooq, P.E. bearing the Miami-Dade County Product Control Renewal stamp with the Notice of Acceptance number and the expiration date by the Miami-Dade County Product Control Division.

MISSILE IMPACT RATING: Large and Small Missile Impact

LABELING: Each unit shall bear a permanent label with the manufacturer's name or logo, city, state and the following statement: "Miami-Dade County Product Control Approved", unless otherwise noted herein.

RENEWAL of this NOA shall be considered after a renewal application has been filed and there has been no change in the applicable building code negatively affecting the performance of this product.

TERMINATION of this NOA will occur after the expiration date or if there has been a revision or change in the materials, use, and/or manufacture of the product or process. Misuse of this NOA as an endorsement of any product, for sales, advertising or any other purposes shall automatically terminate this NOA. Failure to comply with any section of this NOA shall be cause for termination and removal of NOA.

ADVERTISEMENT: The NOA number preceded by the words Miami-Dade County, Florida, and followed by the expiration date may be displayed in advertising literature. If any portion of the NOA is displayed, then it shall be done in its entirety.

INSPECTION: A copy of this entire NOA shall be provided to the user by the manufacturer or its distributors and shall be available for inspection at the job site at the request of the Building Official.

This NOA **renews NOA #08-0519.04** and consists of this page 1, evidence submitted pages E-1, E-2 & E-3 as well as approval document mentioned above.

The submitted documentation was reviewed by **Helmy A. Makar, P.E., M.S.**

MIAMI-DADE COUNTY APPROVED

Helmy A. Makar
11/06/2008

NOA No. 08-0908.13
Expiration Date: 05/06/2014
Approval Date: 11/06/2008

Rolladen, Inc.

NOTICE OF ACCEPTANCE: EVIDENCE SUBMITTED

1. EVIDENCE SUBMITTED UNDER PREVIOUS APPROVAL #03-0616.02

A. DRAWINGS

1. *Drawing No. 02-22, titled (4" Blade Accordion Shutter Details), sheets 1 through 5 of 5, prepared by Al-Farooq Corporation, dated October 29, 2002, last revision #B dated March 23, 2004, signed and sealed by Humayoun Farooq, P.E.*

B. TESTS

1. *Test report on Large Missile Impact & Cyclic Wind Pressure Test of "Accordion Shutter", prepared by Hurricane Engineering & Testing Inc., Report No. HETI-02-1239, dated July 24, 2002, signed and sealed by Rafael E. Droz-Seda, P.E.*
2. *Test report on Uniform Static Air Pressure Test of "Accordion Shutter", prepared by Hurricane Engineering & Testing Inc., Report No. HETI-02-1240, dated July 24, 2002, signed and sealed by Rafael E. Droz-Seda, P.E.*

C. CALCULATIONS

1. *Comparative analysis and Anchor calculation, dated April 14, 2003, Sheets L1, L2, D1- D2, R1, A1 – A29, and AS1 –AS9, prepared by Al-Farooq Corporation, signed and sealed by Humayoun Farooq, P.E. on June 03, 2003.*

D. QUALITY ASSURANCE

1. *By Miami-Dade County Building Code Compliance Office.*

E. MATERIAL CERTIFICATIONS

1. *Certified Tensile Test Report from Hurricane Engineering & Testing Inc., Report No. HETI-02-T052, dated August 22, 2002, signed and sealed by Rafael E. Droz-Seda, P.E.*

2. EVIDENCE SUBMITTED UNDER PREVIOUS APPROVAL #07-0522.01

A. DRAWINGS

1. *Drawing No. 02-22, titled " 4" Blade Accordion Shutter Details ", sheets 1 through 5 of 5, prepared by Al-Farooq Corporation, dated October 29, 2002, last revision #C dated July 27, 2006, signed and sealed by Humayoun Farooq, P.E.*

B. TESTS

1. *None.*

C. CALCULATIONS

1. *Anchor calculation, dated May 04, 2007, 55 Sheets, prepared by Al-Farooq Corporation, signed and sealed by Humayoun Farooq, P.E. on May 04, 2007.*

Helmy A. Makar, P.E., M.S.
Product Control Examiner
NOA No. 08-0908.13
Expiration Date: 05/06/2014
Approval Date: 11/06/2008

D. QUALITY ASSURANCE

1. *By Miami-Dade County Building Code Compliance Office.*

E. MATERIAL CERTIFICATIONS

1. *None.*

3. EVIDENCE SUBMITTED UNDER PREVIOUS APPROVAL #08-0519.04

A. DRAWINGS

1. *Drawing No. 02-22, titled " 4" Blade Accordion Shutter Details ", sheets 1 through 5 of 5, prepared by Al-Farooq Corporation, dated October 29, 2002, last revision #E dated July 07, 2008, signed and sealed by Humayoun Farooq, P.E.*

B. TESTS

1. *Test report on Large Missile Impact & Cyclic Wind Pressure Test of "Accordion Shutter", prepared by Hurricane Engineering & Testing Inc., Report No. HETI-08-2001, dated JANUARY 18, 2008, signed and sealed by Candido F. Font, P.E.*
2. *Test report on Uniform Static Air Pressure Test of "Accordion Shutter", prepared by Hurricane Engineering & Testing Inc., Report No. HETI-08-2000, dated January 18, 2008, signed and sealed by Candido F. Font, P.E.*

C. CALCULATIONS

1. *Anchor calculation, dated May 07, 2008, 48 Sheets, prepared by Al-Farooq Corporation, signed and sealed by Humayoun Farooq, P.E. on May 07, 2008.*
2. *Revised anchor calculation, dated July 15, 2008, 62 Sheets, prepared by Al-Farooq Corporation, signed and sealed by Humayoun Farooq, P.E. on July 15, 2008.*

D. QUALITY ASSURANCE

1. *By Miami-Dade County Building Code Compliance Office.*

E. MATERIAL CERTIFICATIONS

1. *Certified Tensile Test Report from Hurricane Engineering & Testing Inc., Report No. HETI-08-T100, dated January 21, 2008, signed and sealed by Candido F. Font, P.E.*
2. *Certified Tensile Test Report from Hurricane Engineering & Testing Inc., Report No. HETI-08-T101, dated January 21, 2008, signed and sealed by Candido F. Font, P.E.*

Helmy A. Makar, P.E., M.S.
Product Control Examiner
NOA No. 08-0908.13
Expiration Date: 05/06/2014
Approval Date: 11/06/2008

NOTICE OF ACCEPTANCE: EVIDENCE SUBMITTED

4. NEW EVIDENCE SUBMITTED

A. DRAWINGS

1. None.

B. TESTS

1. None.

C. CALCULATIONS

1. Revised anchor calculation, dated August 27, 2008, 62 Sheets, prepared by Al-Farooq Corporation, signed and sealed by Humayoun Farooq, P.E. on August 27, 2008.

D. QUALITY ASSURANCE

1. By Miami-Dade County Building Code Compliance Office.

E. MATERIAL CERTIFICATIONS

1. None.

Helmy A. Makar, P.E., M.S.
Product Control Examiner
NOA No. 08-0908.13
Expiration Date: 05/06/2014
Approval Date: 11/06/2008

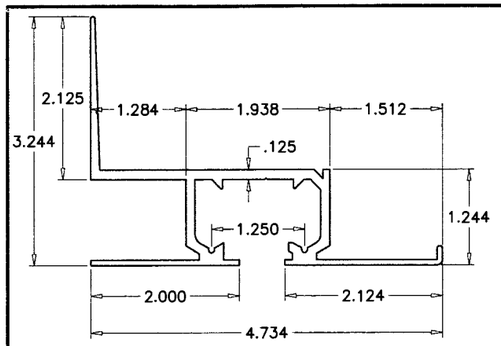

WALL TRACK
6063–T5

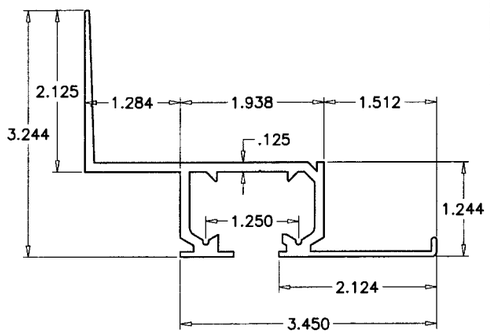

WALL TRACK
6063–T5

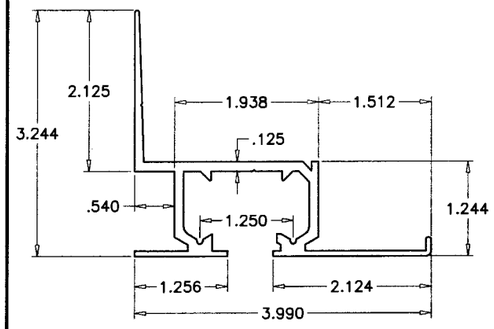

WALL TRACK
6063–T5

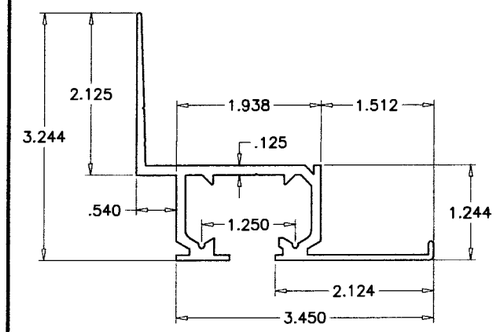

WALL TRACK
6063–T5

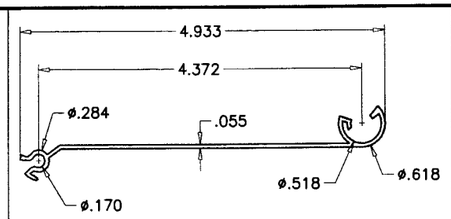

SLAT
6005–T5

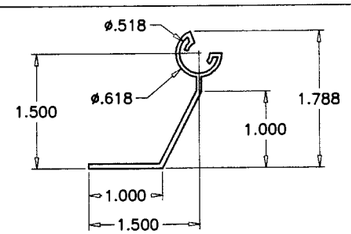

END SLAT
6005–T5

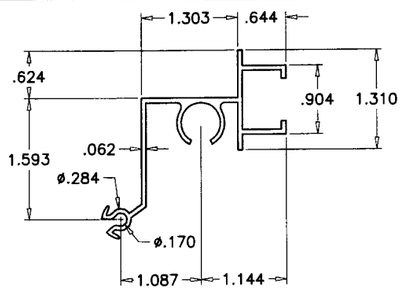

MALE LOCKING SLAT
6063–T5

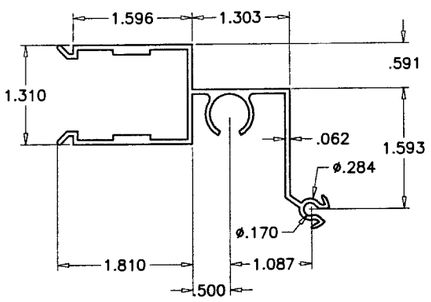

FEMALE LOCKING SLAT
6063–T5

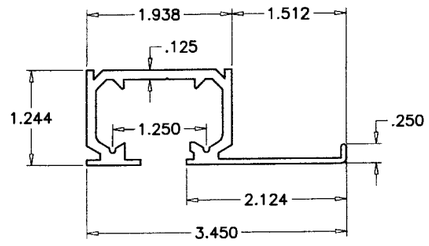

INSIDE MOUNT HEADER & SILL
6063–T5

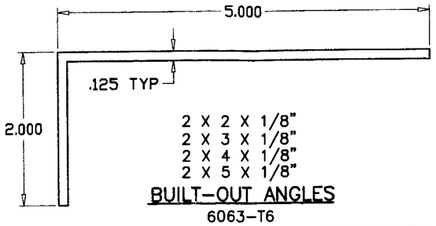

BUILT–OUT ANGLES
6063–T6

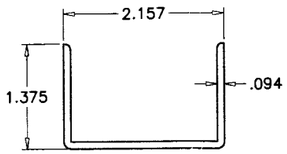

BOTTOM TRACK ADAPTER
6063–T6

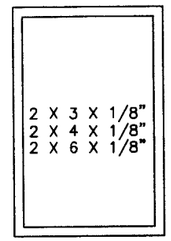

BUILT–OUT TUBES
6063–T6

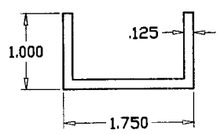

FLOOR SHOE
6063–T6

MAXIMUM DESIGN LOAD RATING =	+ 69.0 PSF
(SLAT SPANS 96" OR SMALLER)	– 92.0 PSF

MAXIMUM DESIGN LOAD RATING =	+ 52.0 PSF
(SLAT SPANS 120" OR SMALLER)	– 72.0 PSF

PRODUCT MARKING

A PERMANENT LABEL SHALL BE AFFIXED ON LOCKING MEMBER OF UNIT ABOVE LOCK WITH THE FOLLOWING STATEMENT.

ROLLADEN INC., MIAMI, FL.
"MIAMI–DADE COUNTY PRODUCT CONTROL APPROVED"

GENERAL NOTES

1. THIS PRODUCT HAS BEEN DESIGNED AND TESTED TO COMPLY WITH THE REQUIREMENTS OF THE FLORIDA BUILDING CODE 2007 EDITION INCLUDING HIGH VELOCITY HURRICANE ZONE.
2. DESIGN CRITERIA FOR ALUMINUM, MINIMUM MECHANICAL PROPERTIES, AND SAFETY FACTORS ARE IN ACCORDANCE WITH THE "ALUMINUM CONSTRUCTION MANUAL" LATEST EDITION.
3. ALUMINUM ALLOYS: ALL EXTRUSIONS SHALL BE ALLOY AS SHOWN
4. STEEL SURFACES TO BE PLACED IN CONTACT WITH ALUMINUM SHALL BE GIVEN ONE COAT OF ZINC CHROMATE PRIMER IN ACCORDANCE WITH FEDERAL SPEC. NO. TTP–645, OR BE GALVANIZED.
5. ANCHORS SHALL BE AS SHOWN ON DETAILS. ANCHOR EMBEDMENT TO BASE MATERIAL SHALL BE BEYOND WALL DRESSING OR STUCCO.
6. ALL BOLTS SHALL BE STAINLESS STEEL, ALUMINUM ALLOY 2024–T4 OR 7075–T6, OR PLATED STEEL. WING NUTS TO BE OF ZINC ALLOY.
7. DESIGN CRITERIA FOR SLATS: MAX DEFLECTION $\leq$ L/30 OR 2".
8. ANCHORING OR LOADING CONDITIONS OTHER THAN THOSE SHOWN IN THESE DETAILS ARE NOT PART OF THIS APPROVAL.
9. A LOAD DURATION INCREASE IN ALLOWABLE STRESS IS USED IN DESIGN OF WOOD ANCHORS ONLY.

DESIGN LOADS SHALL BE CALCULATED AS PER REQUIREMENTS OF ASCE 7–02/04.

FASTENER SPACING IN MASONRY

CHARTS ARE BASED ON TYPICAL EDGE DISTANCE = 12d.
FOR LESSER EDGE DISTANCE DECREASE SPACING BY MULTIPLYING WITH THE FACTOR BELOW

EDGE DIST.	12d=3"	10d=2–1/2"	8d=2"	6d=1–1/2"	5d=1–1/4"
FACTOR	1.00	0.86	0.71	0.57	0.50

EXAMPLE: FOR 3" EDGE DIST. SPACING = 12" O.C. (FROM CHART)
FOR 2" EDGE DIST. SPACING = 12 X .71 = 8.5 O.C.

TYPICAL EDGE DISTANCE IN WOOD = 3/4"
TYPICAL END DISTANCE IN WOOD = 1"
NO REDUCTION FACTOR IS REQUIRED

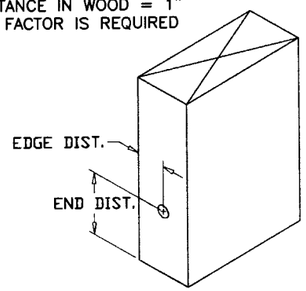

TYPICAL ANCHORS:

ANCHOR (A) = 1/4" DIA. ULTRACON (BY ELCO)
1–3/4" EMBEDMENT INTO 3000 PSI CONC.
1–1/4" EMBEDMENT INTO C–90 BLOCK

ANCHOR (D) = 1/4" RAWL CALK–IN
TOTAL ANCHOR BODY INTO 3000 PSI CONC. OR C–90 BLOCK

ANCHOR (E) = 1/4" DIA. LAG SCREWS
1–1/2" MIN PENETRATION INTO WOOD(S.G.=0.55)

ANCHOR (G) = 1/4" DIA. KWIK–FLEX SELF DRILLING SCREWS
INTO METAL STRUCTURES
(STEEL OR ALUMINUM 1/8" MIN. THICK.)

NOTE: ANCHORS EMBEDMENT SHOWN IS BEYOND WALL & FLOOR COVERINGS (STUCCO, TILES, ETC.)

FOR INSTALLATION DETAILS SEE SHEETS 2 THRU 5.

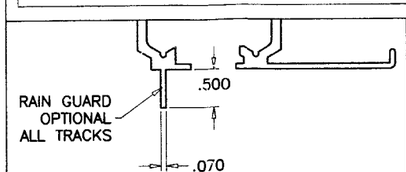

PRODUCT REVISED
as complying with the Florida Buiding Code
Acceptance No 08-0519.04
Expiration Date 05/06/2009
By Helena A. Martin
Miami Dade Product Control Division

PRODUCT RENEWED
as complying with the Florida Building Code
Acceptance No 08-0908.13
Expiration Date 05/06/2014
By Helena A. Martin
Miami Dade Product Control Division

Engr: DR. HUMAYOUN FAROOQ
STRUCTURES
FLA. PE # 16557
C.A.N. 3538

JUL 15 2008

AL-FAROOQ CORPORATION
ENGINEERS & PRODUCT DEVELOPMENT
1235 S.W. 87 AVE
MIAMI, FLORIDA 33174
TEL. (305) 264-8100 FAX. (305) 262-6978

ACCORDION/02–22RNI

4" BLADE ACCORDION SHUTTER DETAILS

ROLLADEN INC.
550 ANSIN BLVD.
HALLANDALE, FL. 33009
TEL. (954) 757–8591 FAX. (954) 454–1577

revisions:

no	date	by	description
A	02.14.04		REV. PER BCCO COMMENTS
B	03.23.04		NO CHANGE THIS SHEET
C	07.27.06		UPDATED FOR 2004 FBC
D	05.05.08		ANCHORS/SPAN REV.
E	07.07.08		REV. PER BCCO COMMENTS

date: 10–29–02
scale: 1/2" = 1"
dr. by: HAMID
chk. by:

drawing no. 02–22

sheet 1 of 5

WALL MOUNTS

ANCHOR TYPE	ANCHOR SPACING INCHES											
	UPTO 60 PSF				UPTO 72 PSF				UPTO 92 PSF			
	CONC	BLK.	WOOD	METAL	CONC	BLK.	WOOD	METAL	CONC	BLK.	WOOD	METAL
A	6.7	3.4	–	–	5.6	2.8	–	–	5.5	2.7	–	–
D	8.1	2.7	–	–	6.8	2.2	–	–	6.6	2.2	–	–
E	–	–	7.7	–	–	–	6.4	–	–	–	6.3	–
G	–	–	–	3.7	–	–	–	3.1	–	–	–	3

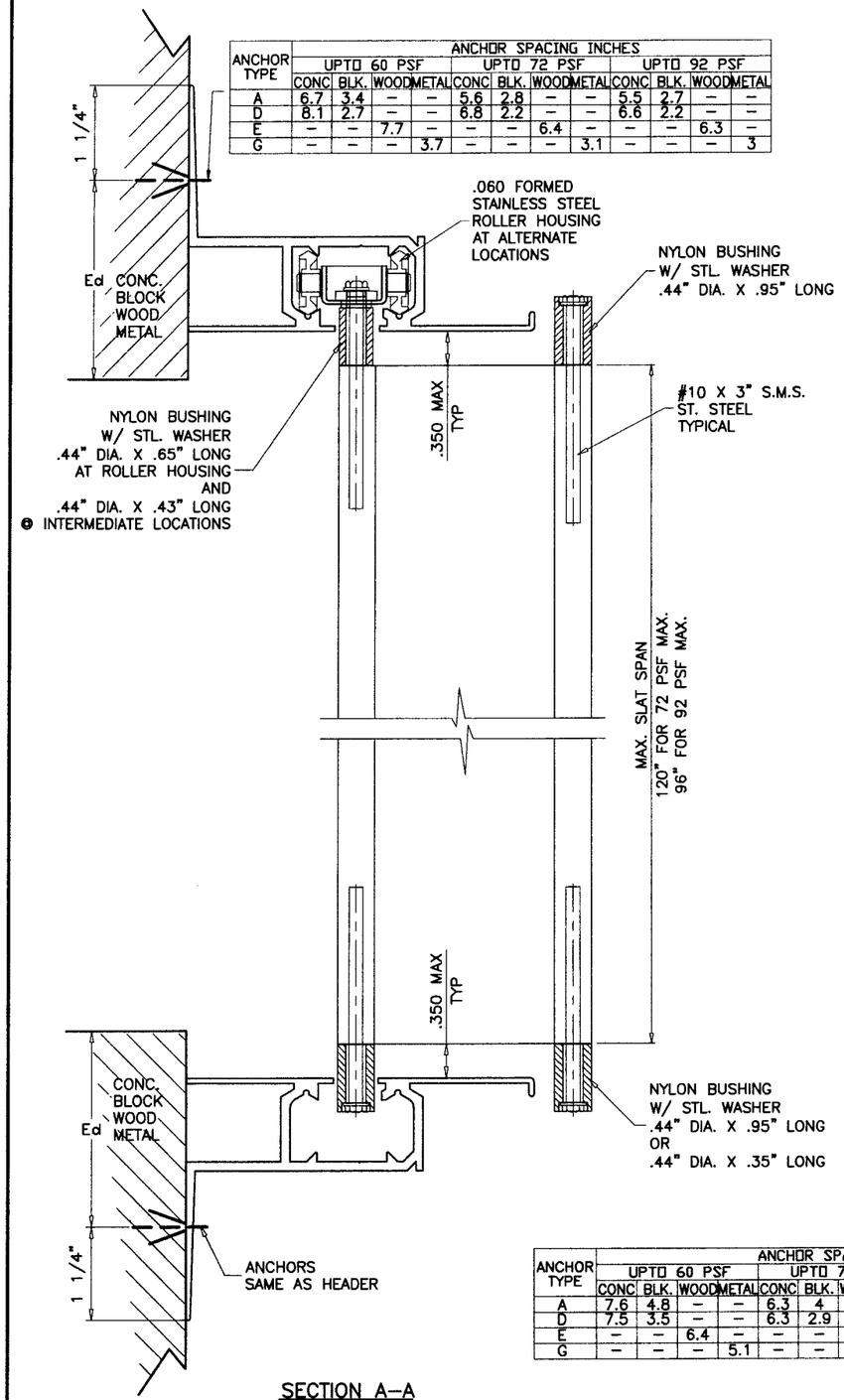

SECTION A–A

INSIDE MOUNTS

ANCHOR TYPE	ANCHOR SPACING INCHES											
	UPTO 60 PSF				UPTO 72 PSF				UPTO 92 PSF			
	CONC	BLK.	WOOD	METAL	CONC	BLK.	WOOD	METAL	CONC	BLK.	WOOD	METAL
A	7.6	4.8	–	–	6.3	4	–	–	6.2	3.9	–	–
D	7.5	3.5	–	–	6.3	2.9	–	–	6.1	2.9	–	–
E	–	–	6.4	–	–	–	5.3	–	–	–	5.2	–
G	–	–	–	5.1	–	–	–	4.3	–	–	–	4.2

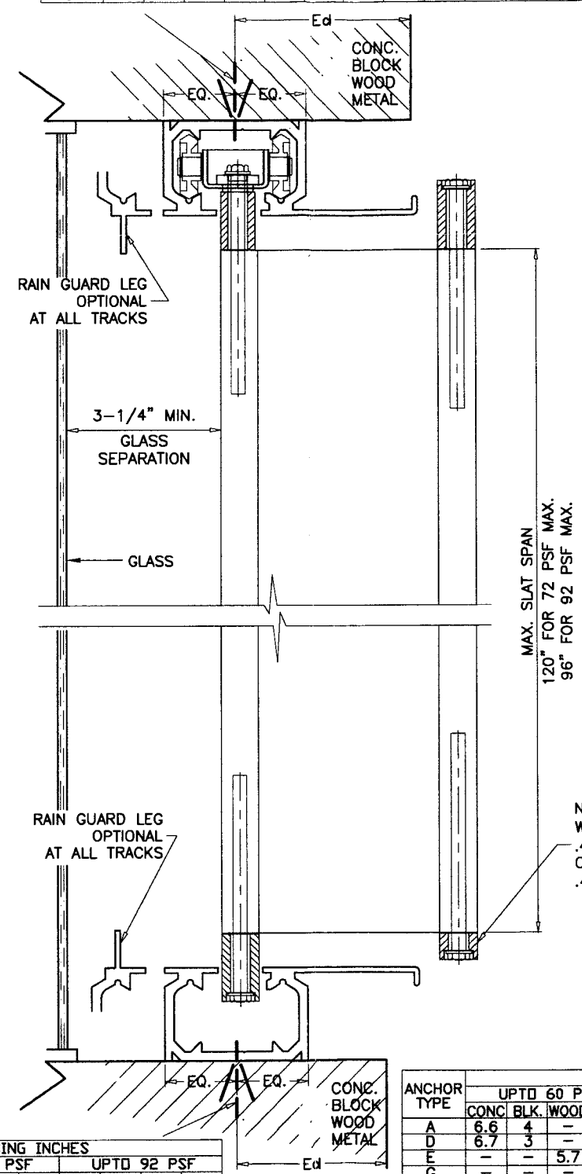

SECTION B–B

ANCHOR TYPE	ANCHOR SPACING INCHES											
	UPTO 60 PSF				UPTO 72 PSF				UPTO 92 PSF			
	CONC	BLK.	WOOD	METAL	CONC	BLK.	WOOD	METAL	CONC	BLK.	WOOD	METAL
A	6.6	4	–	–	5.5	3.4	–	–	5.4	3.3	–	–
D	6.7	3	–	–	5.6	2.5	–	–	5.5	2.5	–	–
E	–	–	5.7	–	–	–	4.8	–	–	–	4.7	–
G	–	–	–	4.3	–	–	–	3.6	–	–	–	3.5

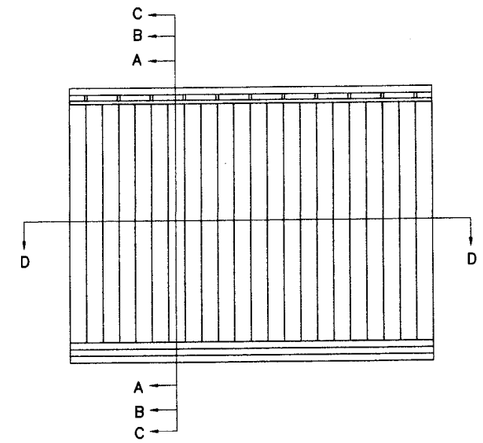

TYPICAL ELEVATION

PRODUCT RENEWED
as complying with the Florida
Building Code
Acceptance No 08-0908.13
Expiration Date 05/06/2014
By Helena A. Melo
Miami Dade Product Control
Division

PRODUCT REVISED
as complying with the Florida
Building Code
Acceptance No 08-0519.04
Expiration Date 05/06/2009
By Helena A. Melo
Miami Dade Product Control
Division

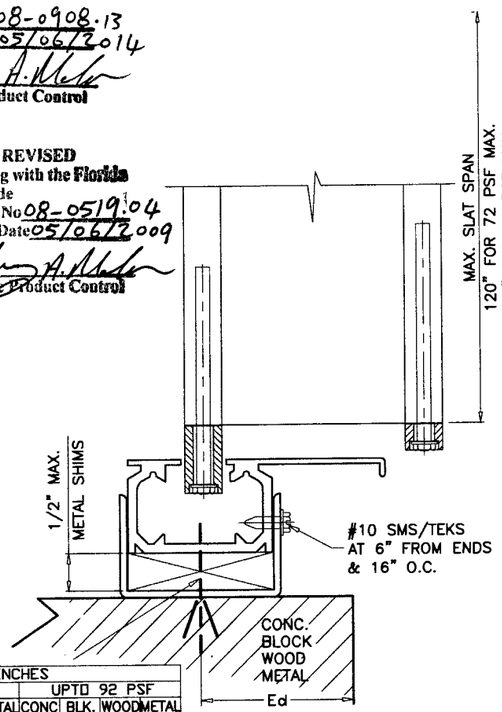

ADJUSTABLE SILL

FOR GENERAL NOTES AND EXTRUSION DETAILS SEE SHEET 1 OF 5.
FOR WOOD INSTALLATIONS SEE SHEET 5.

Ed = TYPICAL EDGE DISTANCE
CONC. & BLOCK = 12d (12 ANCHOR DIAMETERS)
WOOD = 4d
FOR LESSER EDGE DISTANCES SEE SHEET 1 OF 5.

ANCHORS: EMBEDMENT & EDGE DISTANCES SHOWN ARE BEYOND THE WALL & FLOOR COVERING (STUCCO, TILES, ETC.)

HEADER AND SILL DETAILS CAN BE USED IN ANY COMBINATIONS.

Engr: DR. HUMAYOUN FAROOQ
STRUCTURES
FLA. PE # 16557
C.A.N. 3538

JUL 15 2008

AL-FAROOQ CORPORATION
ENGINEERS & PRODUCT DEVELOPMENT
1235 S.W. 87 AVE
MIAMI, FLORIDA 33174
TEL. (305) 264-8100 FAX. (305) 262-6978

ACCORDION/02-22RNI

4" BLADE ACCORDION SHUTTER DETAILS

ROLLADEN INC.
550 ANSIN BLVD.
HALLANDALE, FL. 33009
TEL. (954) 757-8591 FAX. (954) 454-1577

revisions:

no	date	by	description
A	02.14.04		REV. PER BCCO COMMENTS
B	03.23.04		NO CHANGE THIS SHEET
C	07.27.06		UPDATED FOR 2004 FBC
D	05.05.08		ANCHORS/SPAN REV.
E	07.07.08		REV. PER BCCO COMMENTS

date: 10-29-02
scale: 1/2" = 1"
dr. by: HAMID
chk. by:

drawing no. 02-22

sheet 2 of 5

ALT. WALL MOUNTS

ANCHOR TYPE	ANCHOR SPACING INCHES											
	UPTO 60 PSF				UPTO 72 PSF				UPTO 92 PSF			
	CONC	BLK.	WOOD	METAL	CONC	BLK.	WOOD	METAL	CONC	BLK.	WOOD	METAL
A	6.7	3.4	–	–	5.6	2.8	–	–	5.5	2.7	–	–
D	8.1	2.7	–	–	6.8	2.2	–	–	6.6	2.2	–	–
E	–	–	7.7	–	–	–	6.4	–	–	–	6.3	–
G	–	–	–	3.7	–	–	–	3.1	–	–	–	3

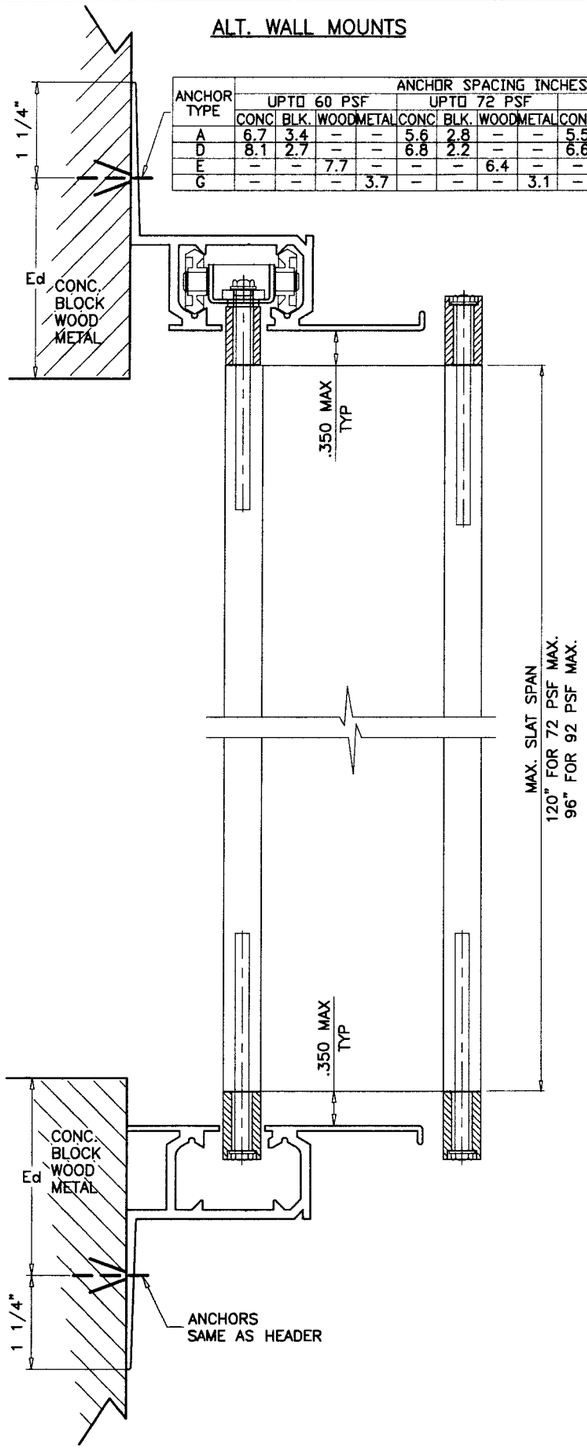

SECTION C–C

BUILT–OUT CONDITION
SILL SIMILAR

ANCHOR TYPE	ANCHOR SPACING INCHES		
	UPTO 60 PSF	UPTO 72 PSF	UPTO 92 PSF
G	3.2	2.7	2.6

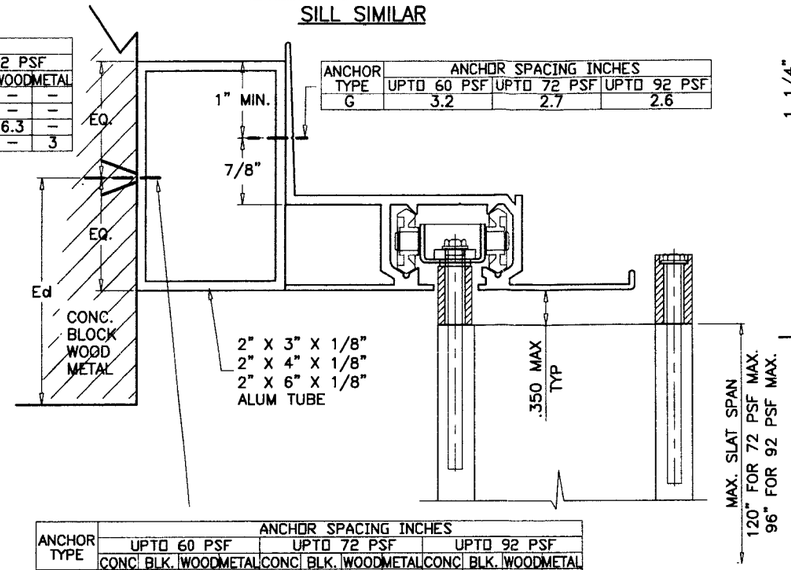

ANCHOR TYPE	ANCHOR SPACING INCHES											
	UPTO 60 PSF				UPTO 72 PSF				UPTO 92 PSF			
	CONC	BLK.	WOOD	METAL	CONC	BLK.	WOOD	METAL	CONC	BLK.	WOOD	METAL
A	8.7	4.4	–	–	7.3	3.6	–	–	7.1	3.6	–	–
D	10	3.5	–	–	8.8	2.9	–	–	8.6	2.9	–	–
E	–	–	10	–	–	–	8.3	–	–	–	8.1	–
G	–	–	–	4.8	–	–	–	4	–	–	–	3.9

ANCHOR TYPE	ANCHOR SPACING INCHES											
	UPTO 60 PSF				UPTO 72 PSF				UPTO 92 PSF			
	CONC	BLK.	WOOD	METAL	CONC	BLK.	WOOD	METAL	CONC	BLK.	WOOD	METAL
A	10	6.4	–	–	10	5.3	–	–	10	5.2	–	–
D	10	5.1	–	–	10	4.3	–	–	10	4.2	–	–
E	–	–	10	–	–	–	10	–	–	–	10	–
G	–	–	–	7	–	–	–	5.8	–	–	–	5.7

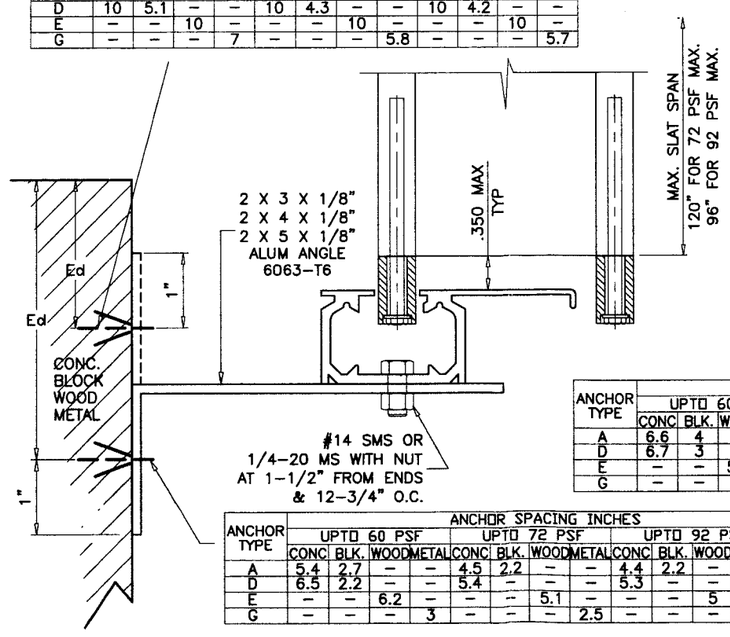

ANCHOR TYPE	ANCHOR SPACING INCHES											
	UPTO 60 PSF				UPTO 72 PSF				UPTO 92 PSF			
	CONC	BLK.	WOOD	METAL	CONC	BLK.	WOOD	METAL	CONC	BLK.	WOOD	METAL
A	5.4	2.7	–	–	4.5	2.2	–	–	4.4	2.2	–	–
D	6.5	2.2	–	–	5.4	–	–	–	5.3	–	–	–
E	–	–	6.2	–	–	–	5.1	–	–	–	5	–
G	–	–	–	3	–	–	–	2.5	–	–	–	2.4

BUILT–OUT CONDITION
HEAD SIMILAR

ALT. WALL MOUNTS
SILL SIMILAR

ANCHOR TYPE	ANCHOR SPACING INCHES											
	UPTO 60 PSF				UPTO 72 PSF				UPTO 92 PSF			
	CONC	BLK.	WOOD	METAL	CONC	BLK.	WOOD	METAL	CONC	BLK.	WOOD	METAL
A	6.7	3.4	–	–	5.6	2.8	–	–	5.5	2.7	–	–
D	8.1	2.7	–	–	6.8	2.2	–	–	6.6	2.2	–	–
E	–	–	7.7	–	–	–	6.4	–	–	–	6.3	–
G	–	–	–	3.7	–	–	–	3.1	–	–	–	3

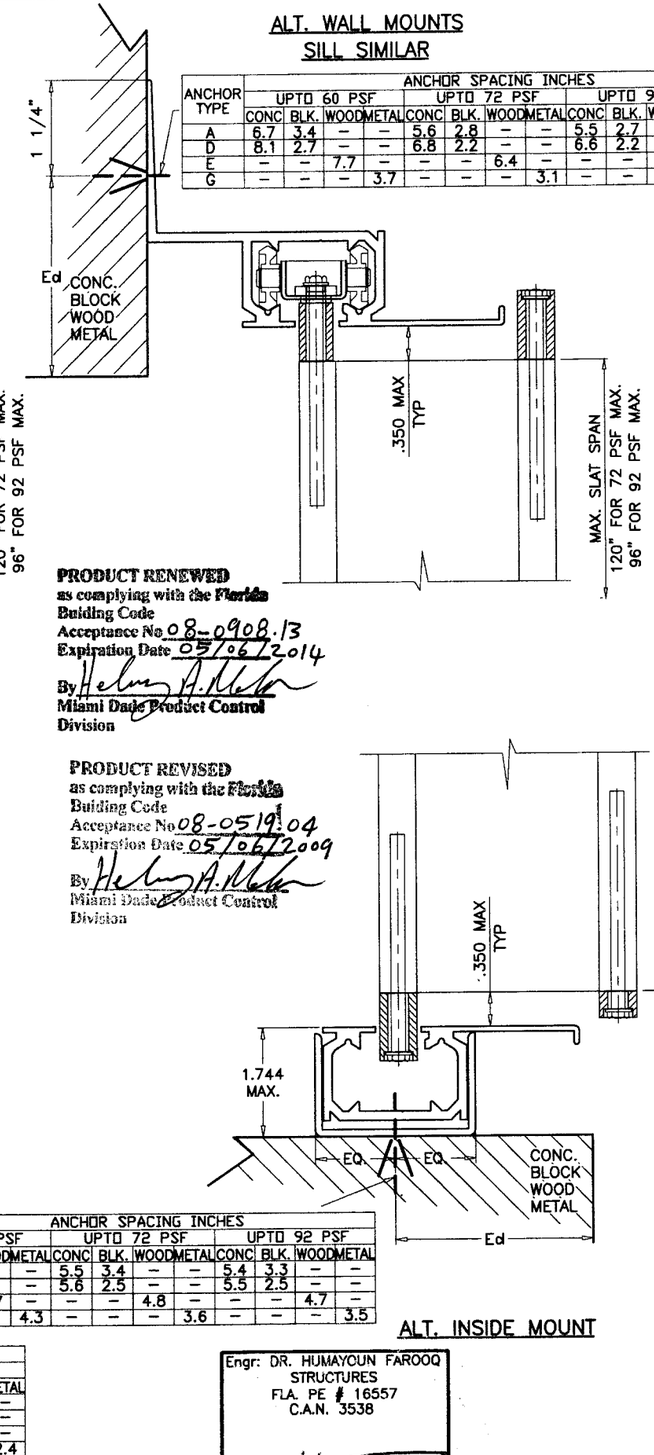

ANCHOR TYPE	ANCHOR SPACING INCHES											
	UPTO 60 PSF				UPTO 72 PSF				UPTO 92 PSF			
	CONC	BLK.	WOOD	METAL	CONC	BLK.	WOOD	METAL	CONC	BLK.	WOOD	METAL
A	6.6	4	–	–	5.5	3.4	–	–	5.4	3.3	–	–
D	6.7	3	–	–	5.6	2.5	–	–	5.5	2.5	–	–
E	–	–	5.7	–	–	–	4.8	–	–	–	4.7	–
G	–	–	–	4.3	–	–	–	3.6	–	–	–	3.5

ALT. INSIDE MOUNT

PRODUCT RENEWED
as complying with the Florida
Building Code
Acceptance No. 08-0908.13
Expiration Date 05/06/2014
By [signature]
Miami Dade Product Control
Division

PRODUCT REVISED
as complying with the Florida
Building Code
Acceptance No. 08-0519.04
Expiration Date 05/06/2009
By [signature]
Miami Dade Product Control
Division

HEADER AND SILL DETAILS CAN BE USED IN ANY COMBINATIONS.

Engr: DR. HUMAYOUN FAROOQ
STRUCTURES
FLA. PE # 16557
C.A.N. 3538

JUL 15 2008

AL-FAROOQ CORPORATION
ENGINEERS & PRODUCT DEVELOPMENT
1235 S.W. 87 AVE
MIAMI, FLORIDA 33174
TEL. (305) 264-8100 FAX. (305) 262-6978

ACCORDION/02–22RNI

4" BLADE ACCORDION SHUTTER DETAILS

ROLLADEN INC.
550 ANSIN BLVD.
HALLANDALE, FL. 33009
TEL. (954) 757–8591 FAX. (954) 454–1577

revisions:

no	date	by	description
A	02.14.04		REV. PER BCCO COMMENTS
B	03.23.04		NO CHANGE THIS SHEET
C	07.27.06		UPDATED FOR 2004 FBC
D	05.05.08		ANCHORS/SPAN REV.
E	07.07.08		REV. PER BCCO COMMENTS

date: 10–29–02
scale: 1/2" = 1"
dr. by: HAMID
chk. by:

drawing no.
02–22

sheet 3 of 5

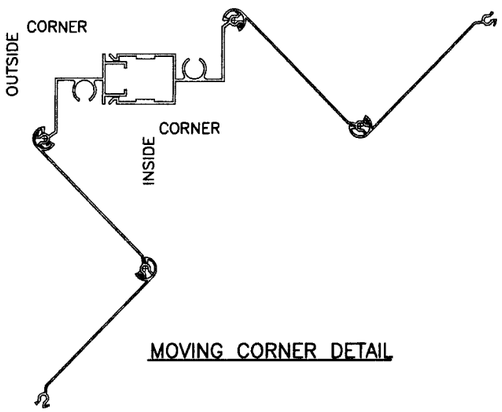

MOVING CORNER DETAIL

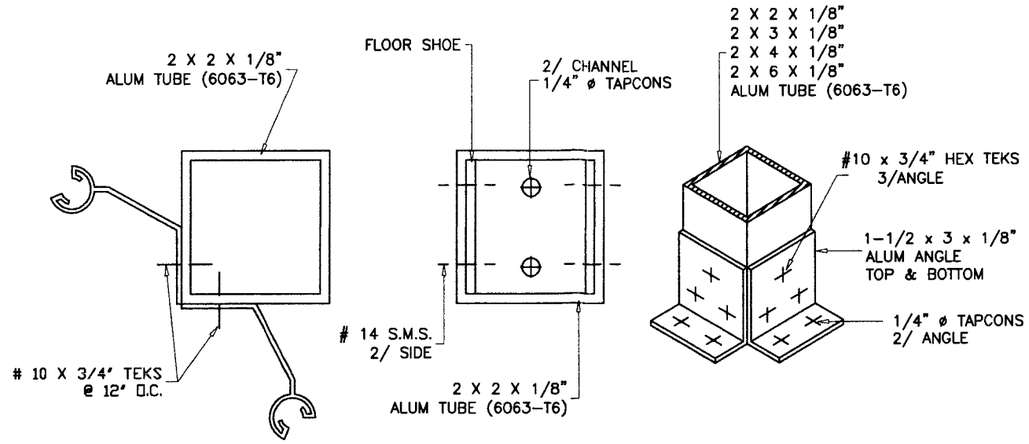

FIXED CORNER DETAIL

PRODUCT RENEWED
as complying with the Florida
Building Code
Acceptance No. 08-0908.13
Expiration Date 05/06/2014
By Helen A. Molina
Miami Dade Product Control
Division

PRODUCT REVISED
as complying with the Florida
Building Code
Acceptance No. 08-0519.04
Expiration Date 05/06/2009
By Helen A. Molina
Miami Dade Product Control
Division

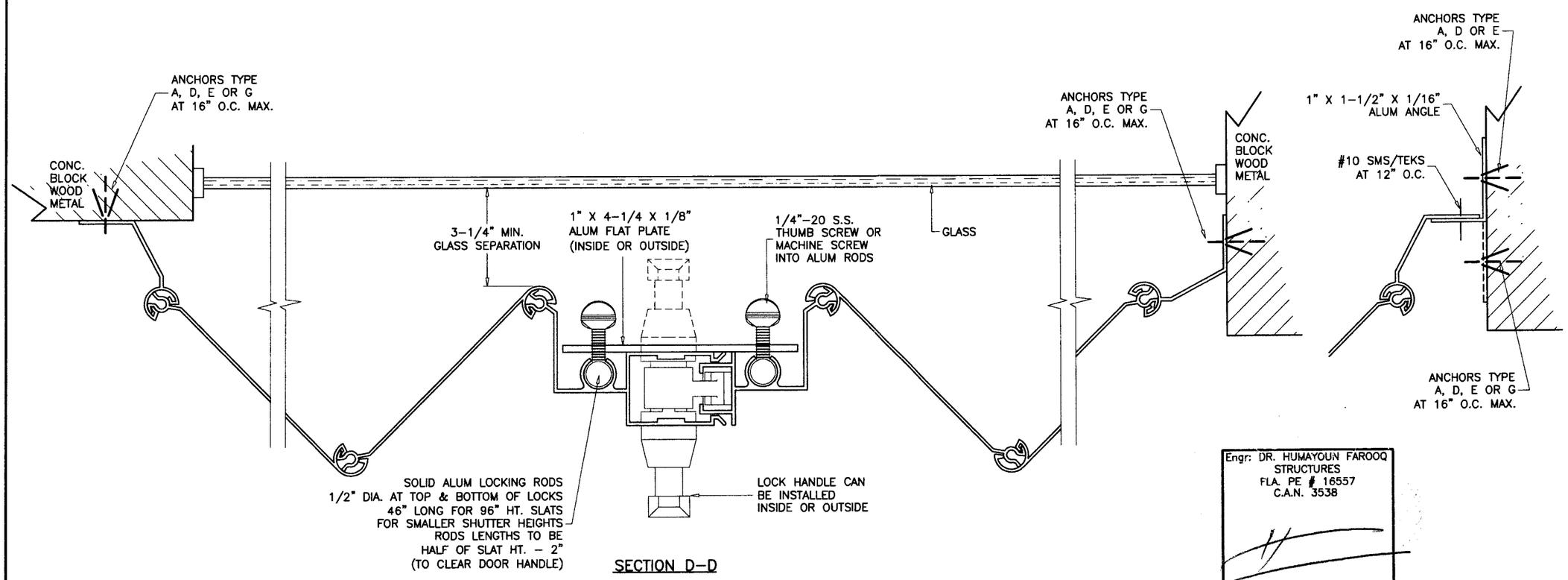

SECTION D–D

Engr: DR. HUMAYOUN FAROOQ
STRUCTURES
FLA. PE # 16557
C.A.N. 3538

JUL 15 2008

AL-FAROOQ CORPORATION
ENGINEERS & PRODUCT DEVELOPMENT
1235 S.W. 87 AVE
MIAMI, FLORIDA 33174
TEL. (305) 264-8100 FAX. (305) 262-6978

ACCORDION/02–22RNI

4" BLADE ACCORDION SHUTTER DETAILS

ROLLADEN INC.
550 ANSIN BLVD.
HALLANDALE, FL. 33009
TEL. (954) 757-8591 FAX. (954) 454-1577

revisions:

no	date	by	description
A	02.14.04		REV. PER BCCO COMMENTS
B	03.23.04		REV. PER BCCO COMMENTS
C	07.27.06		UPDATED FOR 2004 FBC
D	05.05.08		NO CHANGE THIS SHEET
E	07.07.08		REV. PER BCCO COMMENTS

date: 10–29–02
scale: 1/2" = 1"
dr. by: HAMID
chk. by:

drawing no.
02–22

sheet 4 of 5

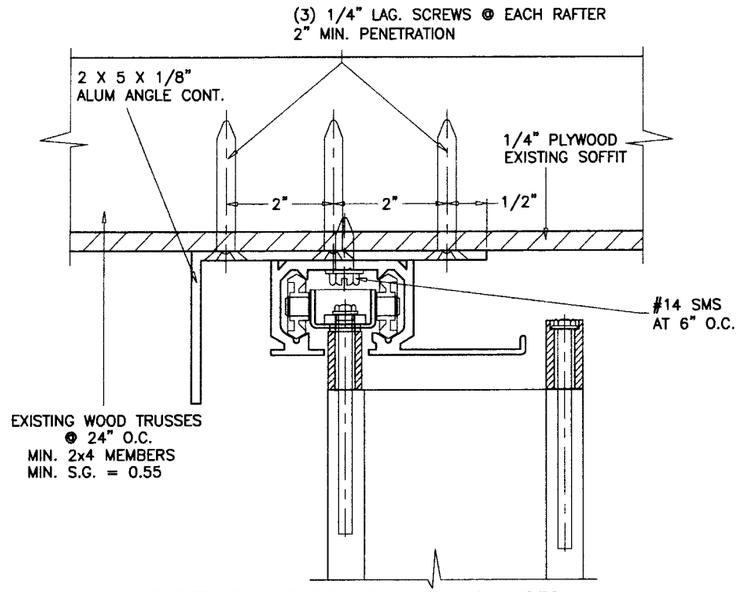

HEADER CONNECTION TO WOOD TRUSSES

FOR SHUTTER HEIGHT OF 108" MAX. DESIGN LOAD = 40 PSF
FOR SHUTTER HEIGHT OF 96" MAX. DESIGN LOAD = 46 PSF
FOR SHUTTER HEIGHT OF 84" MAX. DESIGN LOAD = 52 PSF
FOR SHUTTER HEIGHT OF 72" MAX. DESIGN LOAD = 61 PSF

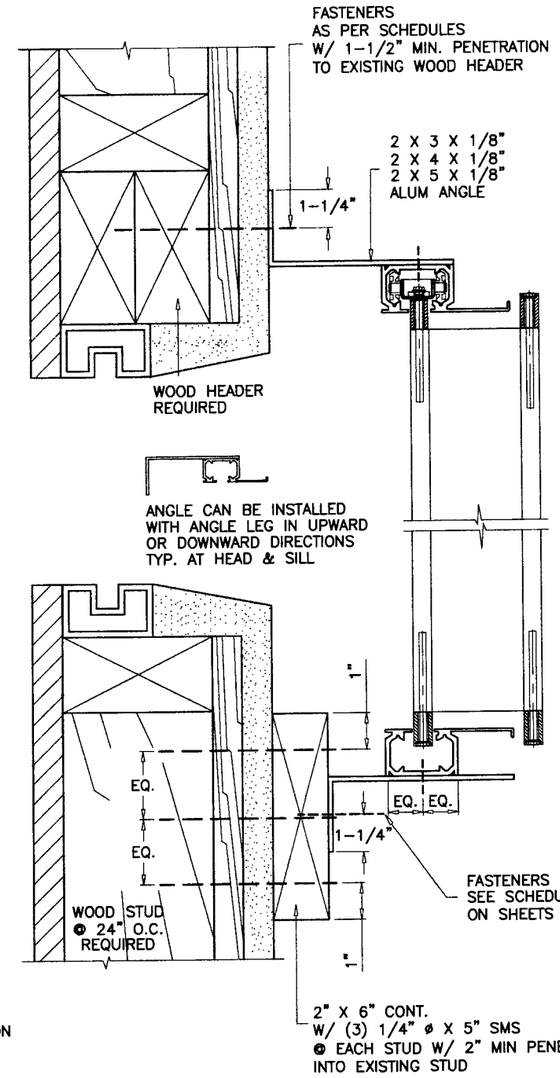

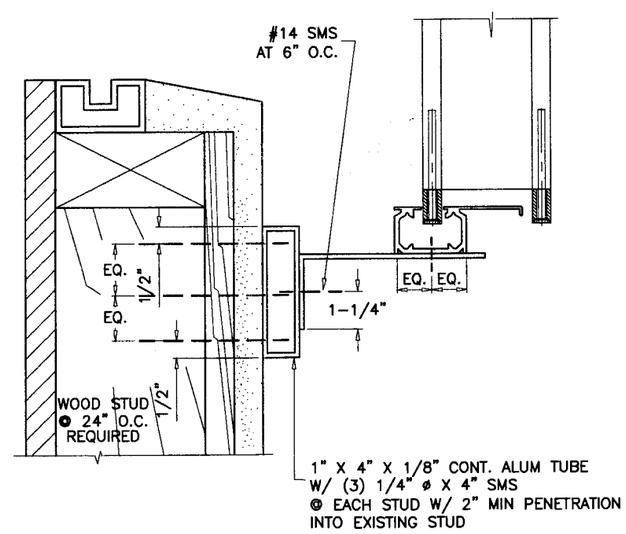

FOR SHUTTER HEIGHT OF 120" MAX. DESIGN LOAD = 36 PSF
FOR SHUTTER HEIGHT OF 108" MAX. DESIGN LOAD = 40 PSF
FOR SHUTTER HEIGHT OF 96" MAX. DESIGN LOAD = 46 PSF
FOR SHUTTER HEIGHT OF 84" MAX. DESIGN LOAD = 52 PSF

INSTALLATION DETAIL ON EXISTING WOOD BUCKS SCALE : 1/4"=1"

ABOVE DETAILS SHOWS CONNECTION OF 2X6 BUCK & 1X4 ALUM TUBE TO WOOD STUDS TO PROVIDE A CONTINUOUS SURFACE FOR SHUTTER INSTALLATION.

FOR INSTALLATION DETAILS OF HEADER/SILL TO CONTINUOUS WOOD MEMBERS SEE SHEETS 2 & 3.

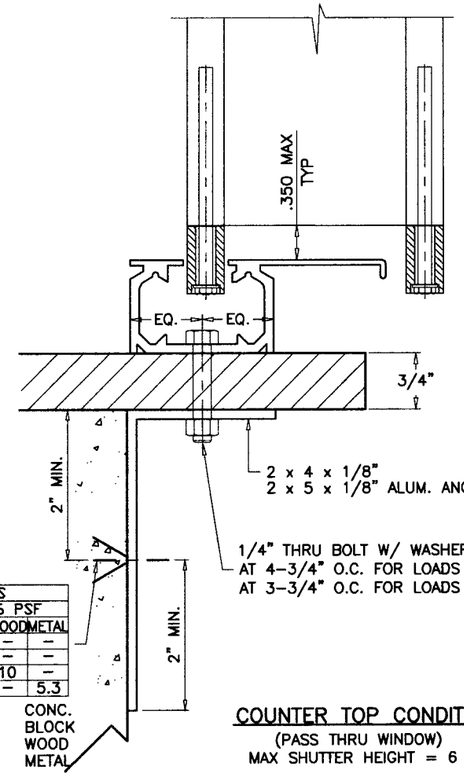

ANCHOR TYPE	ANCHOR SPACING INCHES							
	UPTO 60 PSF				UPTO 76 PSF			
	CONC	BLK.	WOOD	METAL	CONC	BLK.	WOOD	METAL
A	9.8	4.9	–	–	7.7	3.9	–	–
D	10	3.9	–	–	9.3	3.1	–	–
E	–	–	10	–	–	–	10	–
G	–	–	–	6.7	–	–	–	5.3

COUNTER TOP CONDITION

(PASS THRU WINDOW)
MAX SHUTTER HEIGHT = 6 FT.

PRODUCT REVISED
as complying with the Florida
Buiding Code
Acceptance No 08-0519.04
Expiration Date 05/06/2009
By Helen A. Martin
Miami Dade Product Control
Division

Engr: DR. HUMAYOUN FAROOQ
STRUCTURES
FLA. PE # 16557
C.A.N. 3538

JUL 1 5 2008

PRODUCT RENEWED
as complying with the Florida
Buiding Code
Acceptance No 08-0908.13
Expiration Date 05/06/2014
By Helen A. Martin
Miami Dade Product Control
Division

AL-FAROOQ CORPORATION
ENGINEERS & PRODUCT DEVELOPMENT
1235 S.W. 87 AVE
MIAMI, FLORIDA 33174
TEL. (305) 264-8100 FAX. (305) 262-6978

ACCORDION/02-22RNI

4" BLADE ACCORDION SHUTTER DETAILS

ROLLADEN INC.
550 ANSIN BLVD.
HALLANDALE, FL. 33009
TEL. (954) 757-8591 FAX. (954) 454-1577

revisions:

no	date	by	description
A	02.14.04		REV. PER BCCO COMMENTS
B	03.23.04		REV. PER BCCO COMMENTS
C	07.27.06		UPDATED FOR 2004 FBC
D	05.05.08		ANCHORS/SPAN REV.
E	07.07.08		REV. PER BCCO COMMENTS

date: 10-29-02
scale: 1/2" = 1"
dr. by: HAMID
chk. by:

drawing no.
02-22

sheet 5 of 5