MIAMI-DADE COUNTY
BUILDING CODE COMPLIANCE OFFICE (BCCO)
PRODUCT CONTROL DIVISION

MIAMI-DADE COUNTY, FLORIDA
METRO-DADE FLAGLER BUILDING
140 WEST FLAGLER STREET, SUITE 1603
MIAMI, FLORIDA 33130-1563
(305) 375-2901 FAX (305) 372-6339
www.maimidade.gov/buildingcode

NOTICE OF ACCEPTANCE (NOA)

Loren Cook Company
P.O. Box 4047
Springfield, MO 65808

SCOPE:

This NOA is being issued under the applicable rules and regulations governing the use of construction materials. The documentation submitted has been reviewed by Miami-Dade County Product Control Division and accepted by the Board of Rules and Appeals (BORA) to be used in Miami Dade County and other areas where allowed by the Authority Having Jurisdiction (AHJ).

This NOA shall not be valid after the expiration date stated below. The Miami-Dade County Product Control Division (In Miami Dade County) and/or the AHJ (in areas other than Miami Dade County) reserve the right to have this product or material tested for quality assurance purposes. If this product or material fails to perform in the accepted manner, the manufacturer will incur the expense of such testing and the AHJ may immediately revoke, modify, or suspend the use of such product or material within their jurisdiction. BORA reserves the right to revoke this acceptance, if it is determined by Miami-Dade County Product Control Division that this product or material fails to meet the requirements of the applicable building code.

This product is approved as described herein, and has been designed to comply with the Florida Building Code, including the High Velocity Hurricane Zone.

DESCRIPTION: Model GR Roof Fan

APPROVAL DOCUMENT: Drawing No. **SD080717-14**, titled "GR Gravity Ventilator Hurricane Rated Aluminum and Steel", sheets 1 through 6 of 6, dated 07/18/08, prepared by Loren Cook Company, signed and sealed by John D. Winslow, P.E., bearing the Miami-Dade County Product Control Approval stamp with the Notice of Acceptance number and approval date by the Miami-Dade County Product Control Division.

MISSILE IMPACT RATING: Large and Small Missile Impact Resistant

LABELING: Each unit shall bear a permanent label with the manufacturer's name or logo, city, state and following statement: "Miami-Dade County Product Control Approved", unless otherwise noted herein.

RENEWAL of this NOA shall be considered after a renewal application has been filed and there has been no change in the applicable building code negatively affecting the performance of this product.

TERMINATION of this NOA will occur after the expiration date or if there has been a revision or change in the materials, use, and/or manufacture of the product or process. Misuse of this NOA as an endorsement of any product, for sales, advertising or any other purposes shall automatically terminate this NOA. Failure to comply with any section of this NOA shall be cause for termination and removal of NOA.

ADVERTISEMENT: The NOA number preceded by the words Miami-Dade County, Florida, and followed by the expiration date may be displayed in advertising literature. If any portion of the NOA is displayed, then it shall be done in its entirety.

INSPECTION: A copy of this entire NOA shall be provided to the user by the manufacturer or its distributors and shall be available for inspection at the job site at the request of the Building Official.

This NOA consists of this page 1 and evidence page E-1, as well as approval document mentioned above.

The submitted documentation was reviewed by **Carlos M. Utrera, P.E.**

MIAMI-DADE COUNTY APPROVED

10/22/08

Loren Cook Company

NOTICE OF ACCEPTANCE: EVIDENCE SUBMITTED

A. DRAWINGS

1. Drawing No. **SD080717-14**, titled "GR Gravity Ventilator Hurricane Rated Aluminum and Steel", sheets 1 through 6 of 6, dated 07/18/08, prepared by Loren Cook Company, signed and sealed by John D. Winslow, P.E.

B. TESTS

1. Test reports on 1) Uniform Static Air Pressure Test, Loading per FBC TAS 202-94
   2) Large Missile Impact Test per FBC, TAS 201-94
   3) Cyclic Wind Pressure Loading per FBC, TAS 203-94
   along with marked-up drawings and installation diagram of Series/Model 36"x 36" GR, Galvanized Steel Roof Vent, prepared by Architectural Testing, Inc., Test Report No. **79144.01-801-18**, dated 03/03/08, signed and sealed by Jeffrey T. Kaminski, P.E.
2. Test reports on 1) Uniform Static Air Pressure Test, Loading per FBC TAS 202-94
   2) Large Missile Impact Test per FBC, TAS 201-94
   3) Cyclic Wind Pressure Loading per FBC, TAS 203-94
   along with marked-up drawings and installation diagram of Series/Model 36"x 36" GR, Aluminum Roof Vent, prepared by Architectural Testing, Inc., Test Report No. **79144.02-801-18**, dated 06/19/08, signed and sealed by Jeffrey T. Kaminski, P.E.

C. CALCULATIONS

1. Wind Load and Anchor verification calculations, prepared by Tom Barrow Co., complying with FBC-2004, dated 07/18/08, signed and sealed by John D. Winslow, P.E.

D. QUALITY ASSURANCE

1. Miami Dade Building Code Compliance Office (BCCO).

E. MATERIAL CERTIFICATIONS

1. None.

F. STATEMENTS

1. Statement letter of conformance issued by Tom Barrow Co., dated 09/02/08, signed and sealed by John D. Winslow, P.E.
2. Statement letter of no financial interest issued by Tom Barrow Co., dated 09/02/08, signed and sealed by John D. Winslow, P.E.
3. Laboratory compliance letters issued by Architectural Testing, Inc., for Test Reports No. **79144.01/02-801-18**, dated 03/04/08 and 06/19/08 respectively, signed and sealed by Jeffrey T. Kaminski, P.E.

10/22/08

Carlos M. Utrera, P.E.
Product Control Examiner
NOA No. 08-0908.17
Expiration Date: November 13, 2013
Approval Date: November 13, 2008

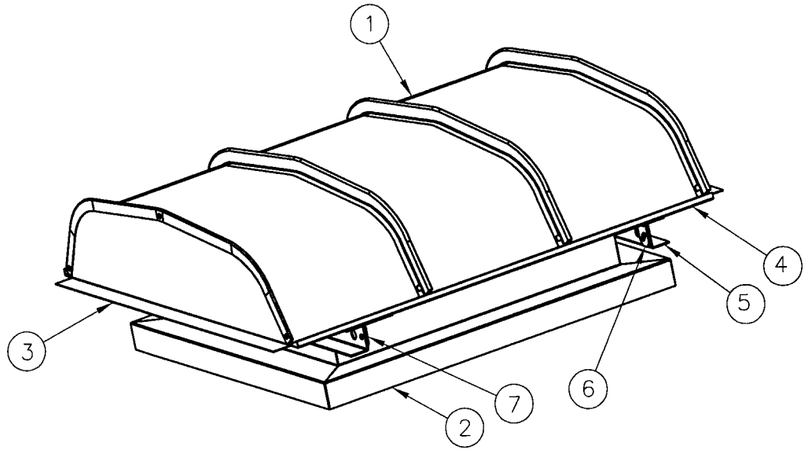

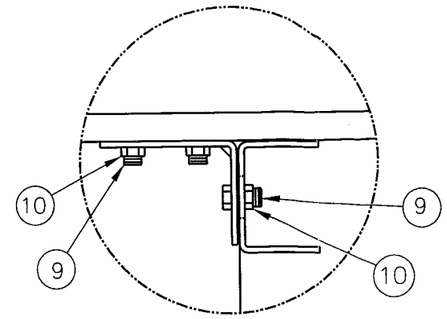

DETAIL A

NOTES:

DESIGN PRESSURE:

+/−130PSF – GALVANIZED STEEL CONTRUCTION

+/− 60PSF – ALUMINUM CONSTRUCTION

IMPACT RATING: LARGE MISSILE IMPACT RESISTANT
ALL DIMENSIONS IN INCHES
UNIT SIZE DETERMINED BY INSIDE THROAT DIMENSION
SIZE 36X36 SHOWN
UNIT SIZE NOT TO EXCEED 36X36
UNIT SIZES SMALLER THAN 36X36 ARE ACCEPTABLE
MINIMUM UNIT SIZE IS 12X12

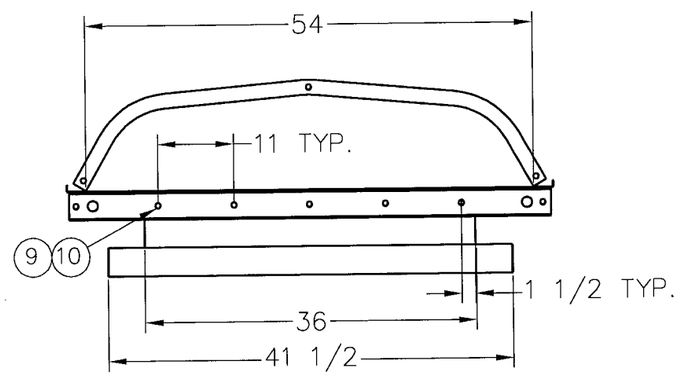

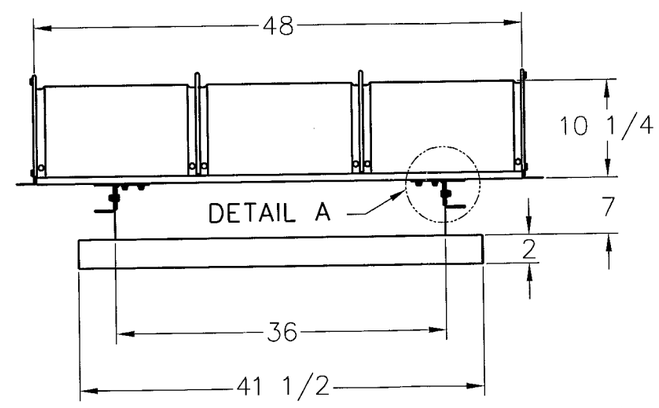

ITEM	QTY	DWG NO.	MATERIAL SPEC.	DESCRIPTION
11	AR	–	1/2 x 1/2 GALV. ST.	BIRDSCREEN MESH–.038 WIRE
10	20	–	5/16–18 STEEL	FLANGE NUT–ZINC COATED
9	20	–	5/16–18 X 3/4 ST,	HWH BOLT–ZINC COATED
8	24	–	1/4 X 3/4 STEEL	HWH SELF–DRILL SCREW
7	2	SHEET6	–	GI/GR MOUNTING BRACKET LEFT
6	2	SHEET6	–	GI/GR MOUNTING BRACKET RIGHT
5	2	SHEET4	–	MOUNTING CHANNEL
4	2	SHEET4	–	SECTION RAIL
3	2	SHEET4	–	HOOD END PANEL
2	1	SHEET5	–	BASE WELDMENT
1	4	SHEET3	–	HOOD PANEL

Approved as complying with the Florida Building Code
Date 11/13/2008
NOA# 08-0908.17
Miami Dade Product Control Division
By

Sept 2, 2008

JOHN D. WINSLOW P.E.
FL PE LIC. NO. 55841

MAT'L	–	
DRAWN	JMD	07/18/08
DESIGNER	BFS	SHEET 1 OF 6

DO NOT SCALE DRAWING
TOLERANCES UNLESS OTHERWISE NOTED

DECIMAL	FRACTIONAL
.XX=±.063"	≤12"=±1/16"
.XXX=±.010"	>12" THRU 96"=±1/8"
.XXXX=±.001"	>96" THRU 144"=±1/4"
ANGULAR ±2°	>144"=±3/8"
	(NC)=NO INSPECTION REQ'D

LOREN COOK CO.
MANUFACTURERS OF AIR MOVING EQUIPMENT
SPRINGFIELD, MISSOURI

GR GRAVITY VENTILATOR
HURRICANE RATED
ALUMINUM AND STEEL

SIZE	DRAWING NO.	REV.
B	SD080717–14	A

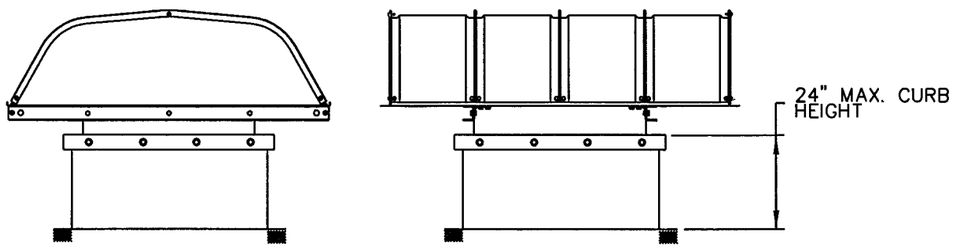

ATTACHMENT OF CURB TO ROOF STRUCTURE

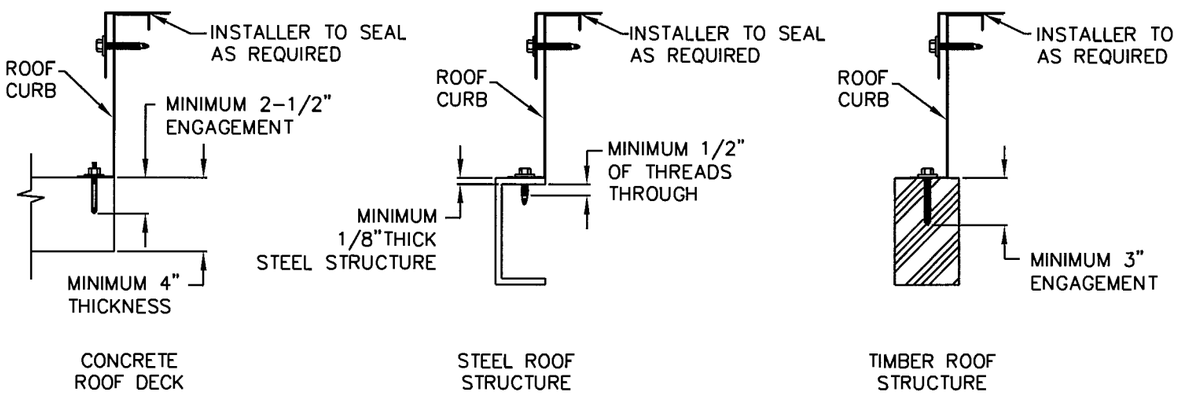

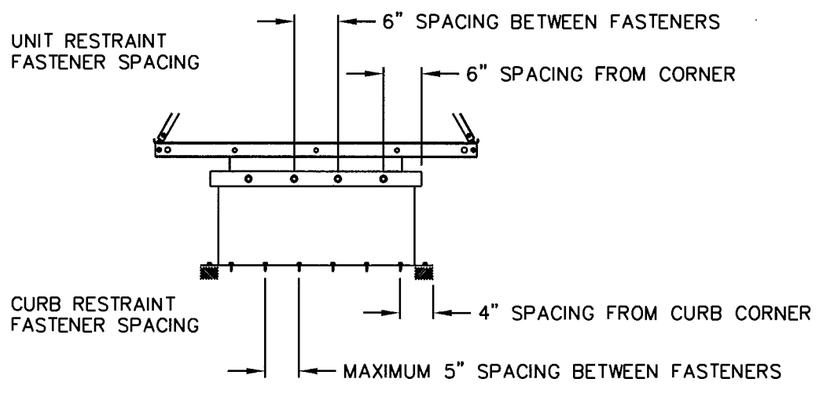

NOTES:

1) GR GRAVITY VENTILATOR AS REFERRED TO HEREIN REFERS TO ALL LOREN COOK MODEL GR GRAVITY VENTILATORS IN SIZES DEFINED BY THE INSIDE THROAT DIMENSIONS UP TO SIZE 36 X 36. THE EXTERIOR HOUSING AND COMPONENTS MAY BE CONSTRUCTED OF EITHER GALVANIZED STEEL OR ALUMINUM WITH THE PRESSURE RATINGS DEFINED ON SHEET #1.
2) THIS APPROVAL IS FOR THE STRUCTURAL CAPACITY OF THE EXTERIOR HOUSING ONLY, IT DOES NOT INCLUDE ANY INTERIOR MECHANISM OR ELECTRICAL PART.
3) THIS PRODUCT HAS NOT BEEN TESTED FOR WATER PENETRATION.
4) UNIT IS TO INCLUDE A CURB CAP BASE TO FACILITATE MOUNTING OF THE UNIT TO A CURB. THE CURB WILL BE ADEQUATELY ATTACHED TO THE BUILDING STRUCTURE TO SUSTAIN ALL FORCES WHICH MAY BE PRODUCED BY THE PRESCRIBED ENVIROMENTAL FORCES EXERTED ON THE FAN AND CURB. THE CURB MUST BE ATTACHED TO A STRUCTURAL MEMBER OF THE BUILDING.
   - CONCRETE DECK: CURB IS TO BE ATTACHED WITH WEDGE TYPE CONCRETE ANCHOR – MINIMUM 3/8" DIAMETER CARBON STEEL – HILTI KWIK BOLT 3 OR EQUAL. MINIMUM 2-1/2" OF ENGAGEMENT IN 2000 PSI MINIMUM CONCRETE. MINIMUM DECK THICKNESS IS 4" AND ANCHORS ARE MINIMUM 2" FROM EDGE. ANCHORS ARE TO BE INSTALLED 4" FROM EACH CORNER AND SPACED 5" THEREAFTER.
   - STEEL ROOF STRUCTURE: CURB IS TO BE ATTACHED WITH SELF-TAPPING STEEL SCREW OF MINIMUM NOMINAL SIZE OF 3/8" DIAMETER AND SCREW SHALL PASS THROUGH STEEL AT LEAST 1/2". THE SCREW MUST BE AT LEAST 2 SCREW DIAMETERS FROM MATERIAL EDGE. SCREWS SHALL BE INSTALLED 4" FROM EACH CORNER AND 5" THEREAFTER.
   - TIMBER ROOF STRUCTURE: CURB IS TO BE ATTACHED WITH STEEL LAG BOLTS NOMINAL SIZE OF 3/8" DIAMETER OR LARGER. TIMBER IS TO BE 2" NOMINAL SIZE OR GREATER. THE BOLT SHALL HAVE A MINIMUM OF 3" OF THREAD ENGAGEMENT AND SHALL BE AT LEAST 1" FROM MATERIAL EDGE. BOLTS SHALL BE INSTALLED 4" FROM EACH CORNER AND 5" THEREAFTER.
5) THE CURB SHALL BE CONSTRUCTED OF 5052H-34 ALUMINUM OR G-90 GALVANIZED STEEL OR STAINLESS STEEL. THE CURB MATERIAL THICKNESS SHALL BE 18 GA (.0470") OR GREATER. THE CURB HEIGHT SHALL NOT EXCEED 24".
6) THE GR GRAVITY VENTILATOR SHALL BE ATTACHED TO THE CURB WITH ONE OF THE FOLLOWING METHODS INSTALLED ON ALL FOUR SIDES OF THE CURB CAP. THE FASTENERS SHALL BE 6" FROM EACH CORNER OF THE FAN BASE AND SPACED NO GREATER THAN 6" THEREAFTER.
   - A) #12 X 2" HEX WASHER HEAD SELF-DRILLING SCREW
   - B) ALTERNATE FASTENER – .25" HEX HEAD BOLT AND WASHER WITH COMPANION NUT INSTALLED ON THE INTERIOR OF THE CURB.
7) ALL FASTENERS ARE TO BE HIGH QUALITY CORROSION RESISTANT STEEL OR STAINLESS STEEL.
8) ANY GAP BETWEEN THE CURB AND CURB CAP SHALL BE FILLED BY THE INSTALLING CONTRACTOR WITH A SUITABLE CORROSION RESISTANT MATERIAL THAT ALLOWS THE FASTENERS TO BE INSTALLED WITHOUT CAUSING EXCESSIVE DISTORTION OF THE UNIT FLANGES.
9) THE INSTALLER IS RESPONSIBLE FOR CHECKING THAT ALL FASTENERS ARE PROPERLY INSTALLED AND ALL ACCESS PANELS ARE IN PLACE BEFORE PUTTING THE UNIT INTO SERVICE.
10) ALL FASTENERS AND ACCESS PANELS MUST BE PROPERLY INSTALLED AFTER MAINTENANCE OPERATIONS FOR UNIT TO MAINTAIN CODE COMPLIANCE.

Approved as complying with the Florida Building Code
Date 11/13/2008
NOA# 08L0908.17
Miami Dade Product Control Division
By

Sept 2, 2008

JOHN D. WINSLOW
FL PE LIC NO. 55841

MAT'L	–	
DRAWN	JMD	07/18/08
DESIGNER	BFS	SHEET 2 OF 6

DO NOT SCALE DRAWING
TOLERANCES UNLESS OTHERWISE NOTED

DECIMAL	FRACTIONAL
.XX=±.063"	≤12"=±1/16"
.XXX=±.010"	>12" THRU 96"=±1/8"
.XXXX=±.001"	>96" THRU 144"=±1/4"
ANGULAR ±2°	>144"=±3/8"
	(NC)=NO INSPECTION REQ'D

LOREN COOK CO.
MANUFACTURERS OF AIR MOVING EQUIPMENT
SPRINGFIELD, MISSOURI

GR GRAVITY VENTILATOR
HURRICANE RATED
ALUMINUM AND STEEL

SIZE	DRAWING NO.	REV.
B	SD080717-14	A

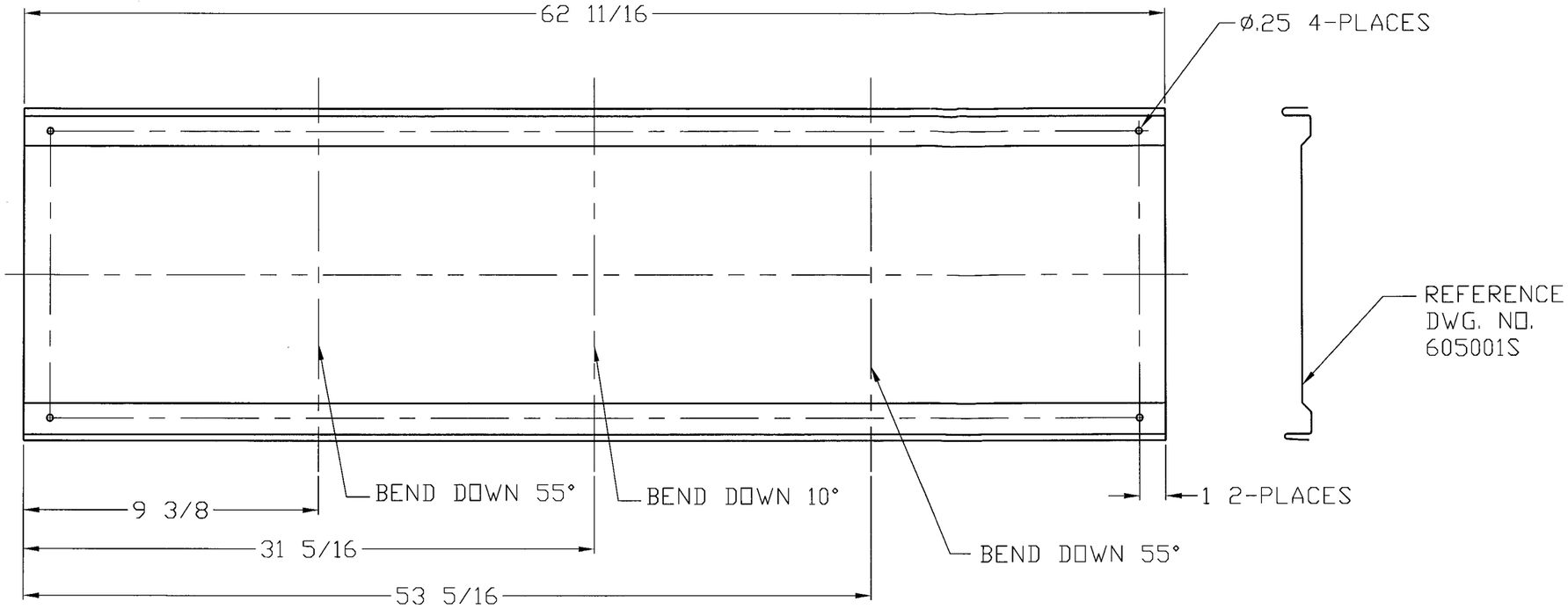

ITEM 1
HOOD PANEL

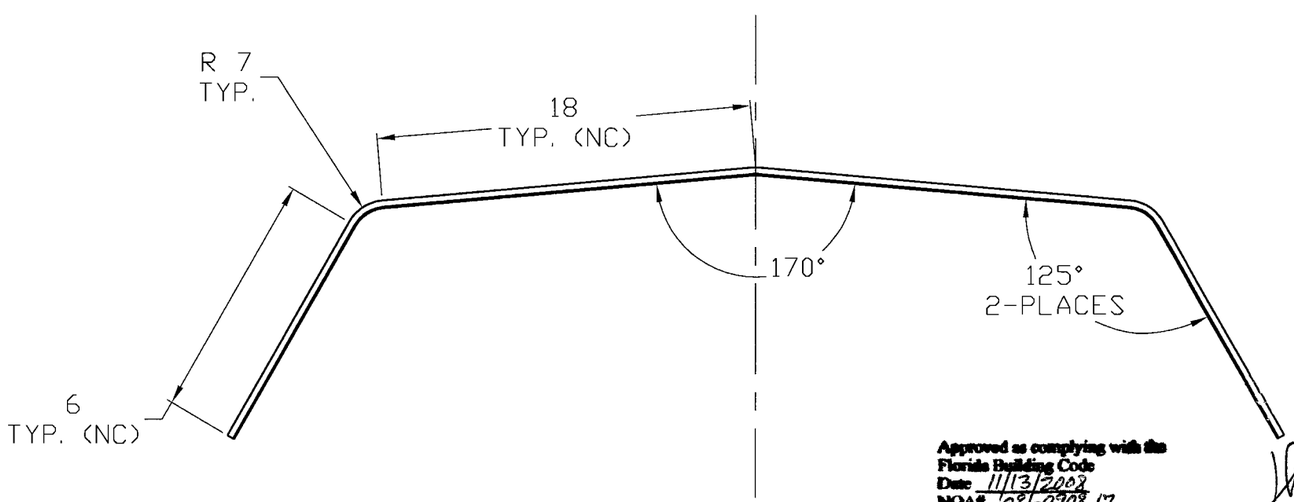

HOOD PANEL SIDE VIEW

NOTES:
4 HOOD PANEL REQUIRED PER UNIT
MATERIAL: 20 GA. G-90 GALVANIZED STEEL
ALTERNATE CONSTRUCTION: .040 3003-H14 ALUMINUM

Approved as complying with the Florida Building Code
Date 11/13/2008
NOA# 08-0908.17
Miami Dade Product Control Division
By

Sept 2, 2008

JOHN D. WINSLOW
FL PE LIC NO. 55841

MAT'L	SEE NOTES	
DRAWN	JMD	07/18/08
DESIGNER	BFS	SHEET 3 OF 6

DO NOT SCALE DRAWING

TOLERANCES UNLESS OTHERWISE NOTED

DECIMAL	FRACTIONAL
.XX=±.063"	≤12"=±1/16"
.XXX=±.010"	>12" THRU 96"=±1/8"
.XXXX=±.001"	>96" THRU 144"=±1/4"
ANGULAR ±2°	>144"=±3/8"
	(NC)=NO INSPECTION REQ'D

LOREN COOK CO.
MANUFACTURERS OF AIR MOVING EQUIPMENT
SPRINGFIELD, MISSOURI

GR GRAVITY VENTILATOR
HURRICANE RATED
ALUMINUM AND STEEL

SIZE	DRAWING NO.	REV.
B	SD080717-14	A

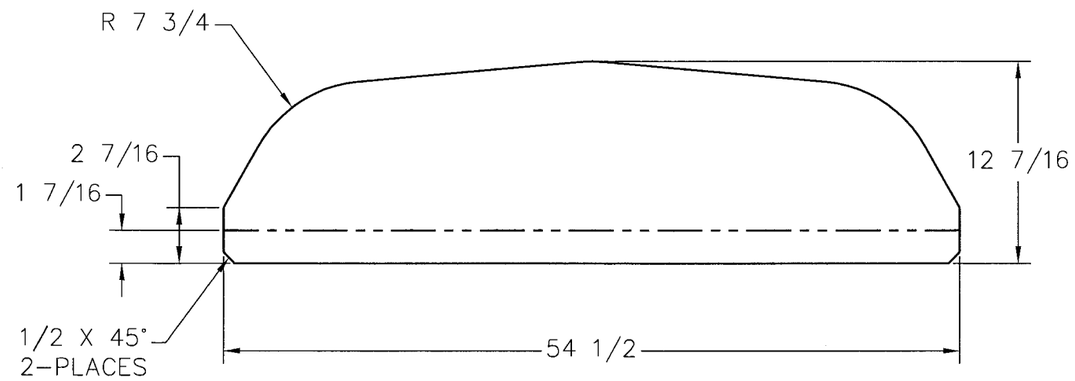

ITEM 1
HOOD END PANEL

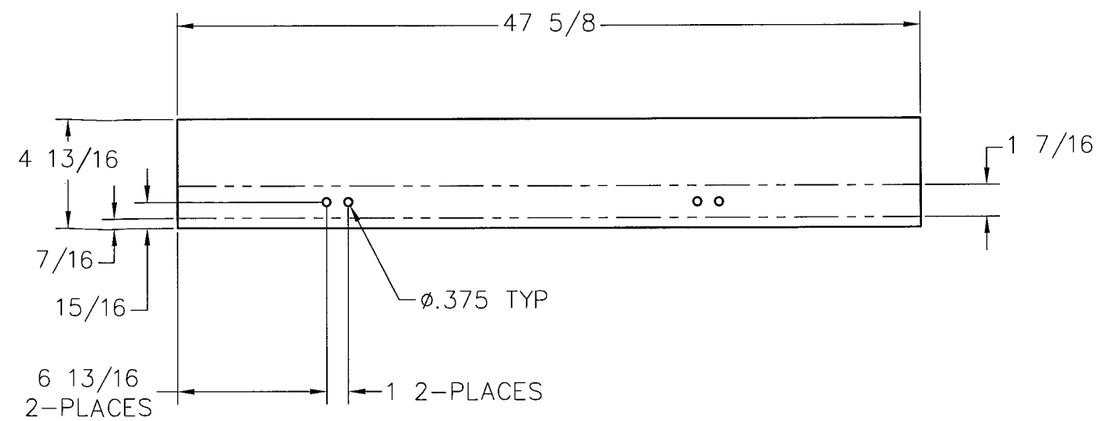

ITEM 2
SECTION RAIL

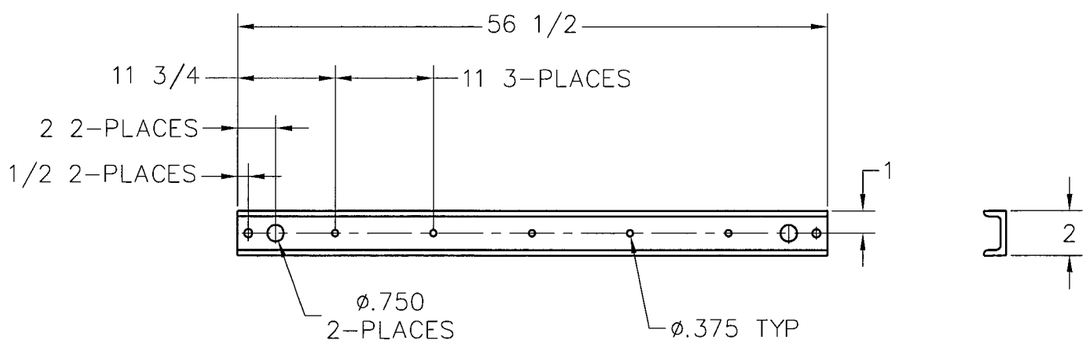

ITEM 3
MOUNTING CHANNEL

Approved as complying with the Florida Building Code
Date 11/13/2008
NOA# 08-0908.17
Miami Dade Product Control Division
By

NOTES:
2 HOOD END PANELS REQUIRED PER UNIT – 18 GA. GALV STEEL/.063 ALUM
2 SECTION RAILS REQUIRED PER UNIT – 16 GA. GALV STEEL/.100 ALUM
2 MOUNTING CHANNELS REQUIRED PER UNIT – 12 GA. GALV STEEL/2 X .130 ALUM
MATERIAL: G-90 GALVANIZED STEEL
ALTERNATE MATERIAL: 3003 H-14 ALUMINUM

Sept 2, 2008

JOHN D. WINSLOW
FL PE LIC NO. 55841

MAT'L	SEE NOTES	
DRAWN	JMD	07/18/08
DESIGNER	BFS	SHEET 4 OF 6

DO NOT SCALE DRAWING
TOLERANCES UNLESS OTHERWISE NOTED

DECIMAL	FRACTIONAL
.XX=±.063"	≤12"=±1/16"
.XXX=±.010"	>12" THRU 96"=±1/8"
.XXXX=±.001"	>96" THRU 144"=±1/4"
	>144"=±3/8"
ANGULAR ±2'	(NC)=NO INSPECTION REQ'D

LOREN COOK CO.
MANUFACTURERS OF AIR MOVING EQUIPMENT
SPRINGFIELD, MISSOURI

GR GRAVITY VENTILATOR
HURRICANE RATED
ALUMINUM AND STEEL

SIZE	DRAWING NO.	REV.
B	SD080717-14	A

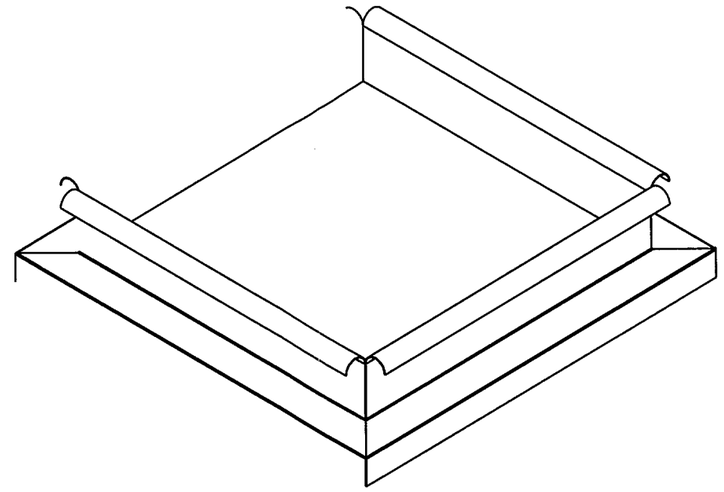

BASE WELDMENT

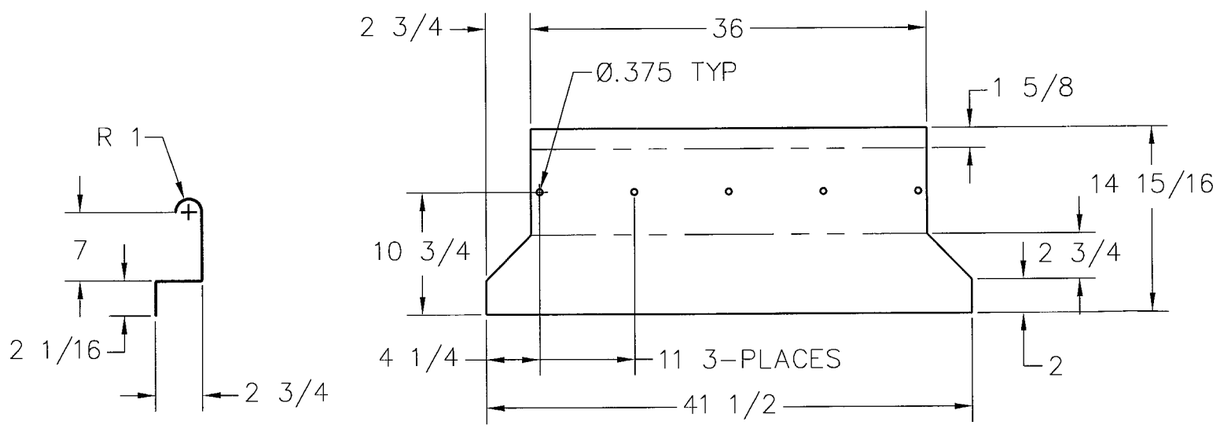

ITEM 1
BASE WIDTH SIDE PANEL
8PUNCH HOLES IN TWO PARTS ONLY

Approved as complying with the Florida Building Code
Date 11/13/2008
NOA# 08-0908.17
Miami Dade Product Control Division
By

NOTES:
MATERIAL: 16 GA. G-90 GALVANIZE STEEL
ALTERNATE MATERIAL: .080 3003 H-14 ALUMINUM

Sept 2, 2008

JOHN D. WINSLOW
FL PE LIC NO. 55841

MAT'L	SEE NOTES	
DRAWN	JMD	07/18/08
DESIGNER	BFS	SHEET 5 OF 6

DO NOT SCALE DRAWING
TOLERANCES UNLESS OTHERWISE NOTED

DECIMAL	FRACTIONAL
.XX=±.063"	≤12"=±1/16"
.XXX=±.010"	>12" THRU 96"=±1/8"
.XXXX=±.001"	>96" THRU 144"=±1/4"
ANGULAR ±2°	>144"=±3/8"
	(NC)=NO INSPECTION REQ'D

LOREN COOK CO.
MANUFACTURERS OF AIR MOVING EQUIPMENT
SPRINGFIELD, MISSOURI

GR GRAVITY VENTILATOR
HURRICANE RATED
ALUMINUM AND STEEL

SIZE	DRAWING NO.	REV.
B	SD080717-14	A

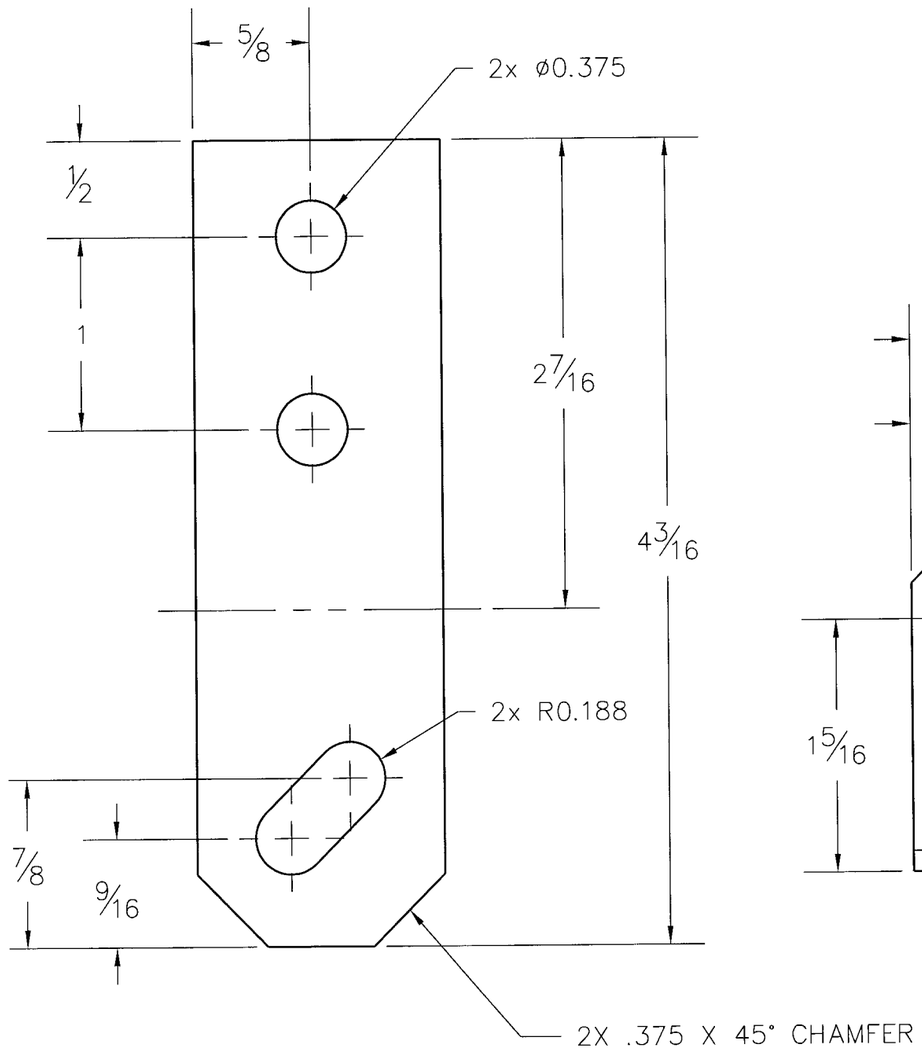

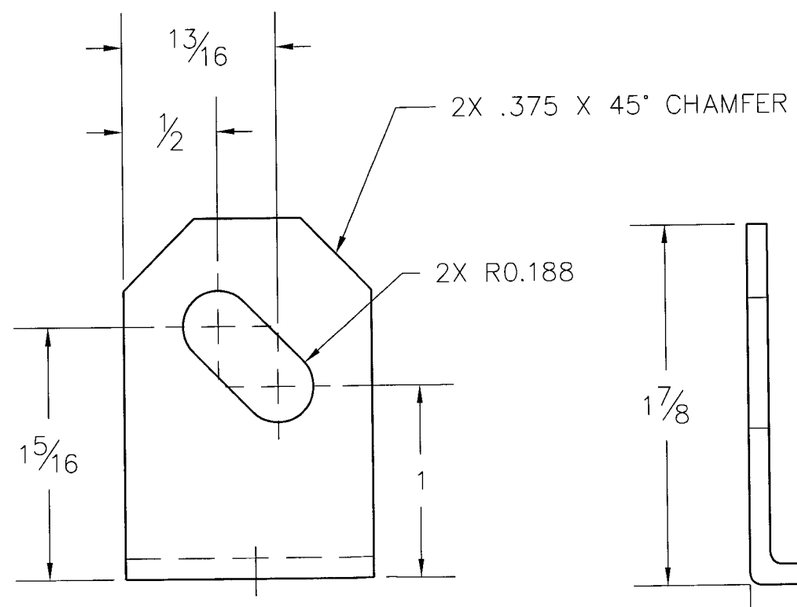

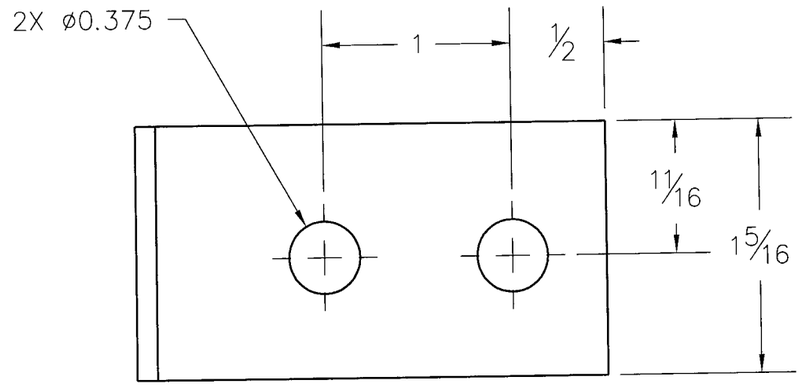

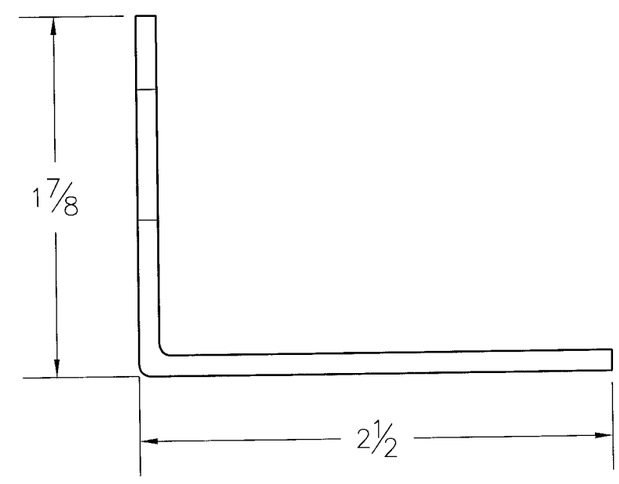

NOTES:
4 MOUNTING BRACKETS REQUIRED PER UNIT.
2 – LEFT BRACKETS FORMED AS SHOWN.
2 – RIGHT BRACKETS FORMED OPPOSITE.

Approved as complying with the Florida Building Code
Date 11/13/2008
NOA# 08-0908.17
Miami Dade Product Control Division
By

Sept 2, 2008

JOHN D. WINSLOW
FL PE LIC NO. 55841

MAT'L	12 GA G-90 GALV.	
DRAWN	JMD	07/18/08
DESIGNER	BFS	SHEET 6 OF 6

DO NOT SCALE DRAWING

TOLERANCES UNLESS OTHERWISE NOTED

DECIMAL	FRACTIONAL
.XX=±.063"	≤12"=±1/16"
.XXX=±.010"	>12" THRU 96"=±1/8"
.XXXX=±.001"	>96" THRU 144"=±1/4"
	>144"=±3/8"
ANGULAR ±2°	(NC)=NO INSPECTION REQ'D

LOREN COOK CO.
MANUFACTURERS OF AIR MOVING EQUIPMENT
SPRINGFIELD, MISSOURI

GR GRAVITY VENTILATOR
HURRICANE RATED
ALUMINUM AND STEEL

SIZE	DRAWING NO.	REV.
B	SD080717-14	A