MIAMI-DADE COUNTY
BUILDING CODE COMPLIANCE OFFICE (BCCO)
PRODUCT CONTROL DIVISION

MIAMI-DADE COUNTY, FLORIDA
METRO-DADE FLAGLER BUILDING
140 WEST FLAGLER STREET, SUITE 1603
MIAMI, FLORIDA 33130-1563
(305) 375-2901 FAX (305) 375-2908
www.buildingcodeonline.com

NOTICE OF ACCEPTANCE (NOA)

Ingersoll-Rand
6810 Hillsdale Court
Indianapolis, IN 46250

SCOPE:
This NOA is being issued under the applicable rules and regulations governing the use of construction materials. The documentation submitted has been reviewed by Miami-Dade County Product Control Division and accepted by the Board of Rules and Appeals (BORA) to be used in Miami Dade County and other areas where allowed by the Authority Having Jurisdiction (AHJ).

This NOA shall not be valid after the expiration date stated below. The Miami-Dade County Product Control Division (In Miami Dade County) and/or the AHJ (in areas other than Miami Dade County) reserve the right to have this product or material tested for quality assurance purposes. If this product or material fails to perform in the accepted manner, the manufacturer will incur the expense of such testing and the AHJ may immediately revoke, modify, or suspend the use of such product or material within their jurisdiction. BORA reserves the right to revoke this acceptance, if it is determined by Miami-Dade County Product Control Division that this product or material fails to meet the requirements of the applicable building code.

This product is approved as described herein, and has been designed to comply with the Florida Building Code, including High Velocity Hurricane Zone of the Florida Building Code.

DESCRIPTION: IR Series "Schlage /Broadway/Dexter, Cobra Keypad" Passage locks w/Deadbolts Hardware-Component Approval

APPROVAL DOCUMENT: Drawing No. **"S-2303" Rev F,** titled "IR-Schlage", sheets 1 through 12 of 12, dated 01-28-03 & last revised on 08-23-08, prepared by manufacturer, signed and sealed by Gordon Thomas, P. E. , bearing the Miami-Dade County Product Control Renewal stamp with the Notice of Acceptance number and expiration date by the Miami-Dade County Product Control Division.

MISSILE IMPACT RATING: Large Missile Impact Resistant

Limitation: 1. Hardware to be used with Single Door application only
2. Cobra Keypad to be used w/ Schlage F-latch & deadbolts

LABELING: Each unit shall bear a permanent label with the manufacturer's name or logo, city, state and following statement: "Miami-Dade County Product Control Approved", unless otherwise noted herein.

RENEWAL of this NOA shall be considered after a renewal application has been filed and there has been no change in the applicable building code negatively affecting the performance of this product.

TERMINATION of this NOA will occur after the expiration date or if there has been a revision or change in the materials, use, and/or manufacture of the product or process. Misuse of this NOA as an endorsement of any product, for sales, advertising or any other purposes shall automatically terminate this NOA. Failure to comply with any section of this NOA shall be cause for termination and removal of NOA.

ADVERTISEMENT: The NOA number preceded by the words Miami-Dade County, Florida, and followed by the expiration date may be displayed in advertising literature. If any portion of the NOA is displayed, then it shall be done in its entirety.

INSPECTION: A copy of this entire NOA shall be provided to the user by the manufacturer or its distributors and shall be available for inspection at the job site at the request of the Building Official.

This NOA **renews** NOA # **05-1116.05**, consists of this page 1 and evidence page as well as approval document mentioned above.

The submitted documentation was reviewed by **Ishaq I. Chanda, P.E.**

MIAMI-DADE COUNTY APPROVED

NOA No 08-0908.19
Expiration Date: November 28, 2013
Approval Date: December 11, 2008

11/20/08

Ingersoll-Rand

NOTICE OF ACCEPTANCE: EVIDENCE SUBMITTED

A. DRAWINGS (Transferred from file # **05-1116.05**)

1. Manufacturer's parts and sections drawings.
2. Drawing No. **"S-2303" Rev F,** titled "IR-Schlage", sheets 1 through 12 of 12, dated 01-28-03 & last revised on 08-23-08, prepared by manufacturer, signed and sealed by Gordon Thomas, P. E..

B. TESTS (Transferred from file #**05-1116.05**)

1. Test reports on 1)Air Infiltration Test not performed
   2) Uniform Static Air Pressure Test, Loading per TAS 202-94
   3) Water Resistance Test not performed.
   4) Large Missile Impact Test per SFBC, TAS 201-94
   5) Cyclic Wind Pressure Loading per SFBC, TAS 203-94
   6) Forced Entry Test, per SFBC 3603.2 (b) and TAS 202-94

Along with marked-up drawings and installation diagram of Single Residential Steel /Fiberglass door w/ wood edge or steel edge, prepared by Certified Testing Laboratory, Architectural Division, Test Report No. **CTLA-992W**, dated January 02, 2003 with addendum letter dated August 29, 2003, signed and sealed by Ramesh Patel, P.E.

C. CALCULATIONS: (Transferred from file #**05-1116.05**)

1. Evaluation & performance analysis dated 11/11/05, prepared, signed and sealed by Gordon Thomas, P. E.
2. Verification letter of compliance dated 11/18/08, signed and sealed by Gordon Thomas, P. E.

D. QUALITY ASSURANCE BY:

1. Miami-Dade County Building Code Compliance Office (BCCO).

E. MATERIAL CERTIFICATIONS

1. None

F. STATEMENTS (Transferred from file # **05-1116.05**)

1. Letter of conformance and "No financial interest" dated August 23, 2008, signed and sealed by Gordon Thomas, P. E.
2. Laboratory Statement of compliance, part of the test report **CTLA-992W**, signed and sealed by Ramesh C.Patel, P.E.
3. Request by Ingersoll-rande dated 09/03/08 for renewal with "no change", signed by Roger Vitt.

G. OTHER

1. This NOA renews NOA # **05-1116.05 (03-0206.04)**, expiring November 28, 2008.
2. IR-Schlage passage & deadbolt brochures.

Ishaq I. Chanda

Ishaq I. Chanda, P.E.
Product Control Examiner
NOA No 08-0908.19
Expiration Date: November 28, 2013
Approval Date: December 11, 2008

GENERAL NOTES

1. THIS PRODUCT IS DESIGNED TO MEET THE FLORIDA BUILDING CODE FOR HIGH VELOCITY HURRICANE ZONE.
2. THE LOCK HARDWARE PRODUCTS LISTED IN THIS NOA SHALL BE USED IN CONJUCTION WITH CURRENT NOA'S UTILIZING SIMILAR COMPONENTS AND WILL BE LIMITED BY THE LESSER DESIGN PRESSURE. THE PRODUCTS CAN BE USED WITH FIBERGLASS, WOOD AND STEEL SIDE HINGED SWING DOORS, HOLDING CURRENT NOA.
3. DESIGN PRESSURE RATING SEE TABLE PAGE 1.
4. THE LOCK HARDWARE PRODUCTS LISTED IN THIS NOA MEET THE REQUIRMENTS FOR HIGH VELOCITY HURRICANE WINDBORNE DEBRIS ZONES AS PRESCRIBED IN SECTION 1626 OF THE FLORIDA BUILDING CODE, DESIGN PRESSURES ARE LIMITED BY THE NOA'S THAT THEY ARE USED IN CONJUCTION WITH.

RESIDENTIAL & LIGHT COMMERCIAL 161 HARDWARE

SCHLAGE F(A)-SERIES -161 CYLINDRICAL LOCK (F(A)10/40/51)
WITH SCHLAGE B360/362 DEADBOLT
OR
SCHLAGE F(A)360/362 PASSAGE HANDLESET WITH DEADBOLT

SCHLAGE F-SERIES - 161 CYLINDRICAL LOCK (F(A)10/40/51)
WITH SCHLAGE B260/262 DEADBOLT

COBRA (FE575/576/577) OR COBRA "PLUS" (FE595/596/597) KEYPAD - KPL
AND SCHLAGE F-LATCH
WITH SCHLAGE B360/362, B260/262, DEXTER JD60/62 OR BROADWAY
B1060/1062 DEADBOLT

SCHLAGE S200 SERIES (S210/251/270/280) OR SCHLAGE H100 SERIES
(H110/153/180/185) INTERCONNECTED ENTRANCE LOCK
161 INTERCONNECTED LATCH & DEADBOLT

DEXTER J-SERIES - 161 CYLINDRICAL LOCK (J10/40/54)
WITH JD-SERIES (JD60/62) DEADBOLT
OR
DEXTER JH-SERIES HANDLESET WITH DEADBOLT (JH60/62)

BROADWAY U-SERIES - 161 CYLINDRICAL LOCK (U10/40/51)
WITH BROADWAY B1060/1062 DEADBOLT
OR
BROADWAY U1060/1062 PASSAGE HANDLESET WITH BROADWAY B1060
DEADBOLT

TABLE OF CONTENTS

SHEET #	DESCRIPTION
1	GENERAL NOTES & APPROVED HARDWARE MODELS
2	TYPICAL JAMB TO BUCK & DOOR CROSS SECTIONS
3	SCHLAGE F10 SERIES PASSAGE
4	SCHLAGE B360 SERIES DEADBOLT
5	SCHLAGE B260 SERIES DEADBOLT
6	SCHLAGE U10 BROADWAY SERIES PASSAGE KNOB/LEVER
7	SCHLAGE B1060 BROADWAY SERIES DEADBOLT
8	SCHLAGE DEXTER SERIES J10 CNA PASSAGE
9	SCHLAGE DEXTER SERIES JD60 CYLINDER DEADBOLT
10	SCHLAGE S200 SERIES INNTERCONNECTED LOCK
11	COBRA KEYPAD (KPL) FE575/595 WITH ESCUTCHEON TRIM & SCHLAGE LATCH
12	COBRA KEYPAD (KPL) FE575/595 SERIES WITH ROSE TRIM & SCHLAGE LATCH

SCHLAGE
IR Security and Safety
3899 HancookExpressway Security, CO 80911 Ph: 719.390.5071 Fax: 719.392.8453

MIAMI-DADE APPROVED HARDWARE COMPONENTS

REVISIONS

LTR	DESCRIPTION		DATE	APPROVED
E	NEW BORDER	YMF	05/03/05	
F	REVISED_PER_DC_BCCO	YMF	02/13/06	
G	REVISED_PER_DC_BCCO	YMF	05/02/06	

DESIGN PRESSURE RATING OUT/INSWING UNITS (SINGLE DOORS)

HARDWARE MODEL	MAX. DOOR SIZE, TYPE & SWING (UNDER SEPARATE APPROVAL)	DESIGN PRESSURE RATING
SCHLAGE F-SERIES LOCK [F(A)10/40/51] WITH SCHLAGE B360/362 DEADBOLT OR SCHLAGE F(A)360/362 PASSAGE HANDLESET WITH B360/362 DEADBOLT	3'0" X 8'0" SINGLE DOOR WOOD OR STEEL EDGE IN-SWING OR OUT-SWING	+ 67.0psf - 67.0psf
SCHLAGE F-SERIES LOCK [F(A)10/40/51] W / B260/262 DEADBOLT, OR SCHLAGE F(A)260/262 PASSAGE HANDLESET WITH B260/262 DEADBOLT		
COBRA KEYPAD (KPL) (WITH SCHLAGE F-LATCH) [FE575/576/577] WITH SCHLAGE B360/362 OR B260/262, DEXTER JD60/62, OR BROADWAY U1060/1062 DEADBOLT		
COBRA "PLUS" KEYPAD (KPL) (WITH SCHLAGE F-LATCH) [FE595/596/597] WITH SCHLAGE B360/362 OR B260/262, DEXTER JD60/62, OR BROADWAY U1060/1062 DEADBOLT		
SCHLAGE S200 SERIES (S210/251/270/280) INTERCONNECTED ENTRANCE LOCK WITH DEADBOLT	3'0" X 8'0" SINGLE DOOR WOOD EDGE IN-SWING OR OUT-SWING	+ 55.0psf - 55.0psf
DEXTER J-SERIES LOCK (J10/40/54) WITH JD-SERIES (JD60/62) DEADBOLT OR JH-SERIES HANDLESET WITH DEADBOLT (JH60/62)	3'0" X 8'0" SINGLE DOOR WOOD OR STEEL EDGE IN-SWING OR OUT-SWING	+ 67.0psf - 67.0psf
BROADWAY U-SERIES LOCK (U10/40/51) WITH BROADWAY B1060/1062 DEADBOLT OR U1060/1062 PASSAGE HANDLESET WITH BROADWAY B1060/1062 DEADBOLT		
SCHLAGE S200 SERIES (S210/251/270/280) INTERCONNECTED ENTRANCE LOCK WITH DEADBOLT	3'0" X 6'8" SINGLE DOOR WOOD EDGE IN-SWING OR OUT-SWING	

LIMITATION AND SPECIFICATION NOTES:

1. THIS DEVICE IS APPROVED TO BE EQUAL ALTERNATIVE TO BE USED IN SINGLE SOLID WOOD, STEEL AND FIBERGLASS DOORS, HOLDING CURRENT NOA. THE LOWEST DESIGN PRESSURE RATING SHALL APPLY.
2. DOOR PANEL SHALL BE CORE FILLED WITH APPROVED POLYSTYRENE OR POLYURETHANE COMPLYING WITH FLORIDA BUILDING CODE, OR STIFFENERS WITH PANEL MINIMUM OVERALL 1.75" THICKNESS.
3. DOOR PANEL FACE SHEETS TO BE MINIMUM 24ga. OR BETTER FOR STEEL DOORS AND MINIMUM 0.070" SMC FOR FIBERGLASS DOORS. LOCK STILES FOR THE WOOD EDGE STEEL DOOR SHALL BE MINIMUM 1.66" WIDE x 1.251" DEEP. LOCK STILES FOR THE STEEL EDGE STEEL DOOR SHALL BE MINIMUM 0.040" ROLL FORMED STEEL, TOP & BOTTOM RAIL; 1.69" WIDE x 0.50" DEEP, SIDE STILES; 1.69" WIDE x 0.625" DEEP & WOOD LOCK BLOCK.
4. DOOR JAMBS SHALL BE MINIMUM 1.25" WIDE x 4.5" DEEP PINE WOOD OR BETTER.
5. THIS DEVICE SHALL BE INSTALLED IN A SINGLE DOOR NO WIDER THAN 36.0" AND HIGHER THAN 96.0", (SEE DESIGN PRESSURE TABLE).
6. ELECTRICAL/ELECTRONIC FUNCTION AND INSTALLATION OTHER THAN SELF CONTAINED ELECTRONIC DEVICE, IS NOT PART OF THIS APPROVAL AND SUCH INSTALLATION MUST BE REVIEWED BY CORRESPONDING BUILDING AUTHORITY.
7. EGRESS COMPLIANCE TO BE REVIEWED BY BUILDING OFFICIALS.

8/23/08
FL 46718

PRODUCT RENEWED
as complying with the Florida
Building Code
Acceptance No 08-0908.14
Expiration Date Nov 25, 2013
By Shaq L. Unger
Miami Dade Product Control
Division

THIRD ANGLE PROJECTION

DRAWN ROF	DATE 1/28/03
CHECKED	
APPROVED	
ENG. APPVL	

Ingersoll Rand
Security Technologies
111 Congressional Blvd., Suite 200
Carmel, Indiana 46032

TITLE MIAMI-DADE COUNTY APPROVAL
SCHLAGE LOCK COMPANY
ANSI GRADE 1, 2 OR 3
161 HARDWARE
GENERAL NOTES AND APPROVED MODELS

SIZE FLAT | DWG NO. S-2303 SHEET 1 OF 12 | REV G

SCALE: NTS | AUTOCAD

REVISIONS			
LTR	DESCRIPTION	DATE	APPROVED
E	NEW BORDER, REVD NOTE YMF	11/02/05	
F	REVISED PER DC BCCO YMF	02.13.06	

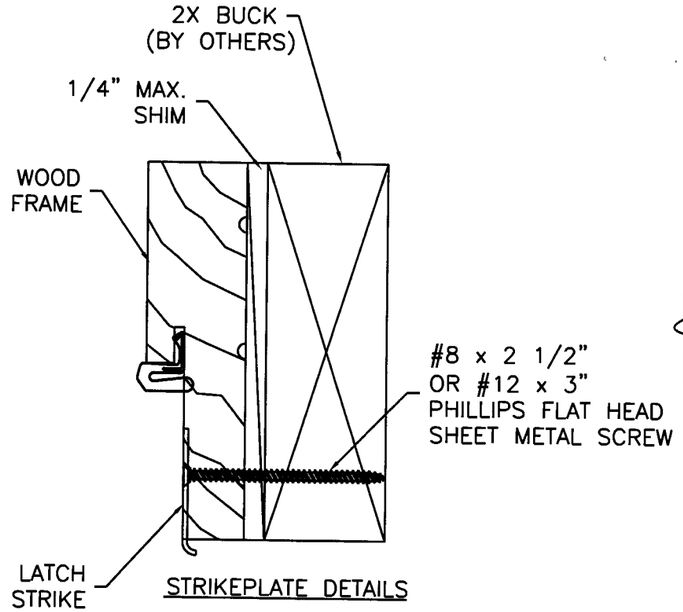

STRIKEPLATE DETAILS

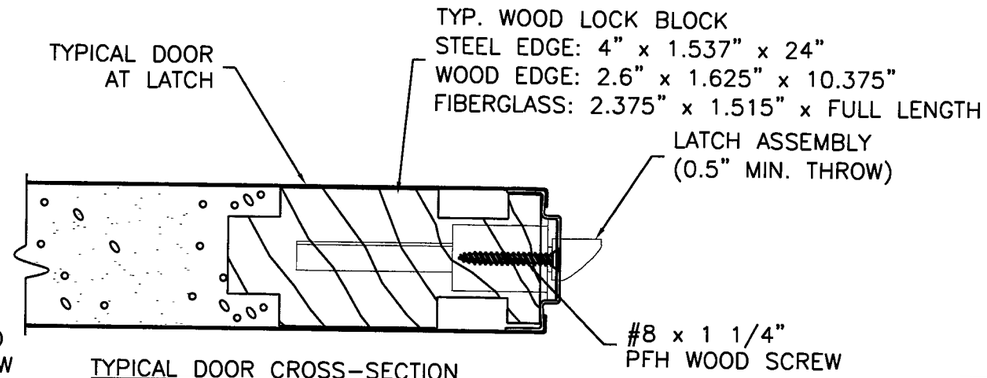

TYPICAL DOOR CROSS-SECTION
AT LATCH AREA
STEEL EDGE DOOR SHOWN. SEE
SHEET 1 FOR OTHER TYPES OF
DOORS

TYPICAL LATCH INSTALLATION B-B
FOR ILLUSTRATION PURPOSE ONLY

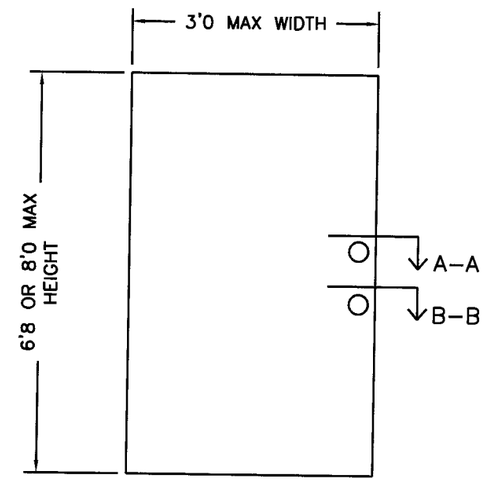

SINGLE DOOR
UNDER SEPARATE APPROVAL

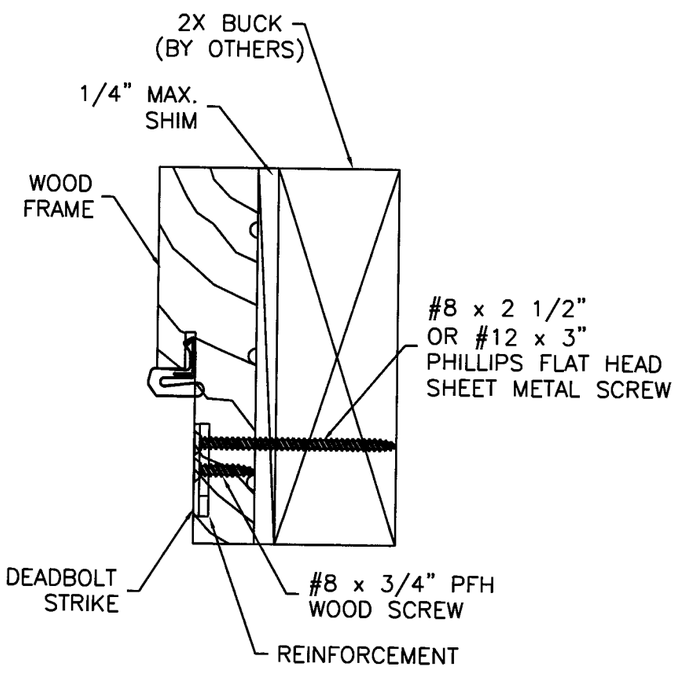

STRIKEPLATE DETAILS

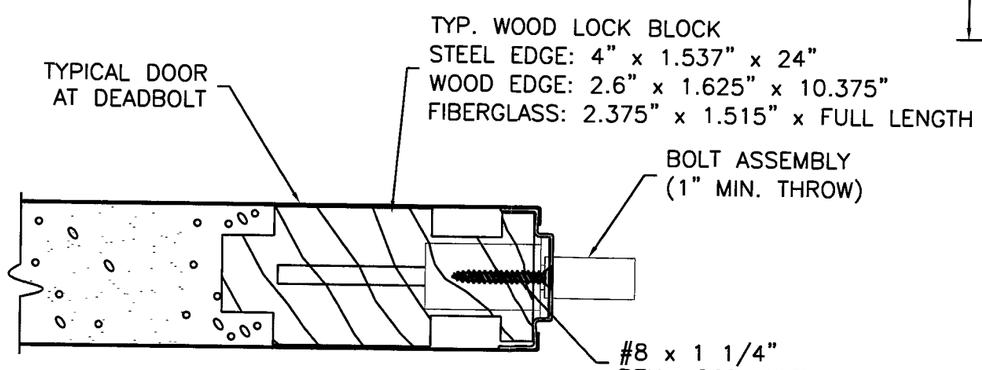

TYPICAL DOOR CROSS-SECTION
AT DEADBOLT AREA
STEEL EDGE DOOR SHOWN. SEE
SHEET 1 FOR OTHER TYPES OF
DOORS

TYPICAL DEADBOLT INSTALLATION A-A
FOR ILLUSTRATION PURPOSE ONLY

8/23/08
FL 46778

PRODUCT RENEWED
as complying with the Florida
Buiding Code
Acceptance No 08-0908.19
Expiration Date Nov 28, 2013
By Ishaq I. Chanda
Miami Dade Product Control
Division

THIRD ANGLE PROJECTION

DRAWN ROF	DATE 1/28/03
CHECKED	
APPROVED	
ENG. APPVL	

Ingersoll Rand
Security Technologies
111 Congressional Blvd., Suite 200
Carmel, Indiana 46032

TITLE MIAMI-DADE COUNTY APPROVAL
SCHLAGE LOCK COMPANY
TYPICAL JAMB TO BUCK
& DOOR CROSS SECTIONS

SIZE FLAT | DWG NO. S-2303 | SHEET 2 OF 12 | REV F

SCALE: NTS | AUTOCAD

REVISIONS			
LTR	DESCRIPTION	DATE	APPROVED
E	NEW BORDER, REVD NOTE YMF	11/02/05	
F	REVISED PER DC BCCO YMF	02.13.06	

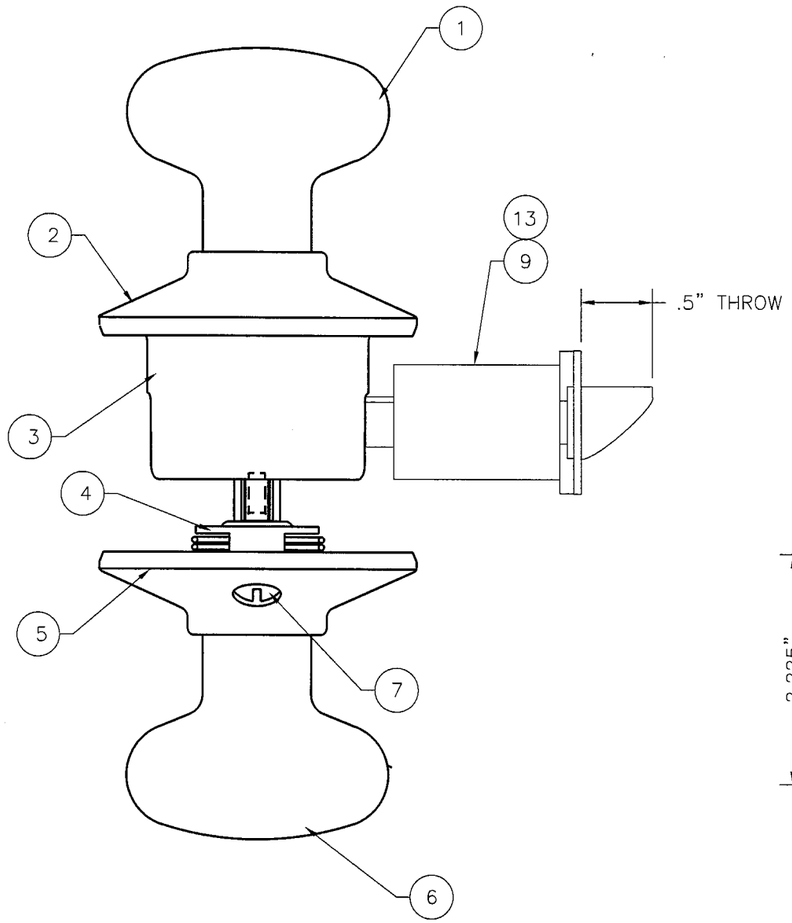

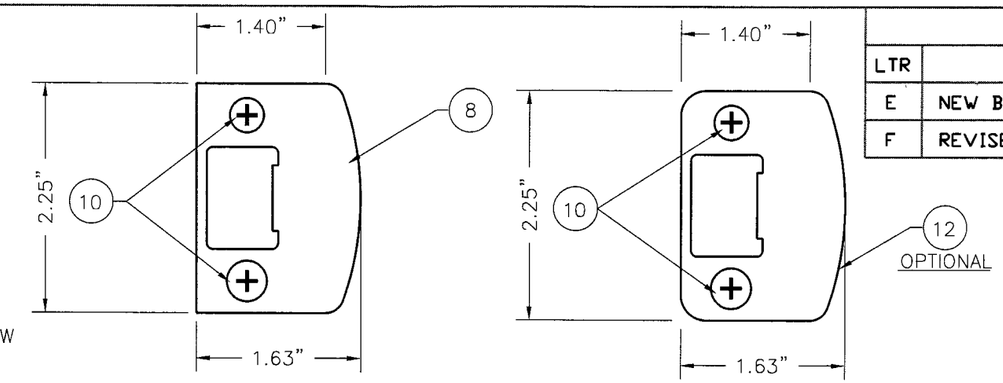

JAMB STRIKE
0.057" MIN. STEEL

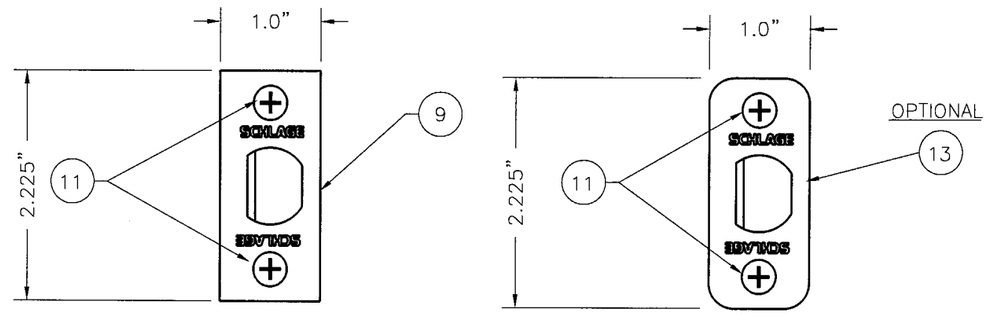

LATCH STRIKE
0.052" MIN. STEEL

8/23/08
FL 46718

ITEM	DESCRIPTION
1	KNOB, OUTSIDE
2	ROSE TRIM, OUTSIDE
3	CHASIS, OUTSIDE
4	CHASIS, INSIDE
5	ROSE TRIM, INSIDE
6	KNOB, INSIDE
7	SCREW, KNOB MOUNTING
8	STANDARD PACKAGE JAMB STRIKE
9	LATCH STRIKE, STANDARD PACKAGE
10	#8 x 2 1/2 PHILLIPS FLAT HEAD WOOD SCREW (LATCH TO FRAME)
11	#8 x 1 1/4 PHILLIPS FLAT HEAD WOOD (STRIKEE TO DOOR)
12	VISUAL PACKAGE JAMB STRIKE
13	LATCH STRIKE, VISUAL PACKAGE

IR-SCHLAGE F-SERIES
(F(A)10/40/51)
CYLINDRICAL LOCK TO BE
USED WITH SCHLAGE
B260/360 SERIES
DEADBOLT

PRODUCT RENEWED
as complying with the Florida
Buiding Code
Acceptance No 08-0908.19
Expiration Date Nov 28, 2013
By [signature]
Miami Dade Product Control
Division

THIRD ANGLE PROJECTION

Ingersoll Rand
Security Technologies
111 Congressional Blvd., Suite 200
Carmel, Indiana 46032

DRAWN ROF	DATE 1/28/03	TITLE MIAMI-DADE COUNTY APPROVAL SCHLAGE LOCK COMPANY F-SERIES CYLINDRICAL LOCK KNOB SERIES SHOWN	
CHECKED			
APPROVED		SIZE FLAT	DWG NO. S-2303 SHEET 3 OF 12 REV F
ENG. APPVL		SCALE: NTS AUTOCAD	

REVISIONS			
LTR	DESCRIPTION	DATE	APPROVED
E	NEW BORDER, REVD NOTE YMF	11/02/05	
F	REVISED PER DC BCCO YMF	02.13.06	
G	REVISED PER DC BCCO YMF	05/02/06	

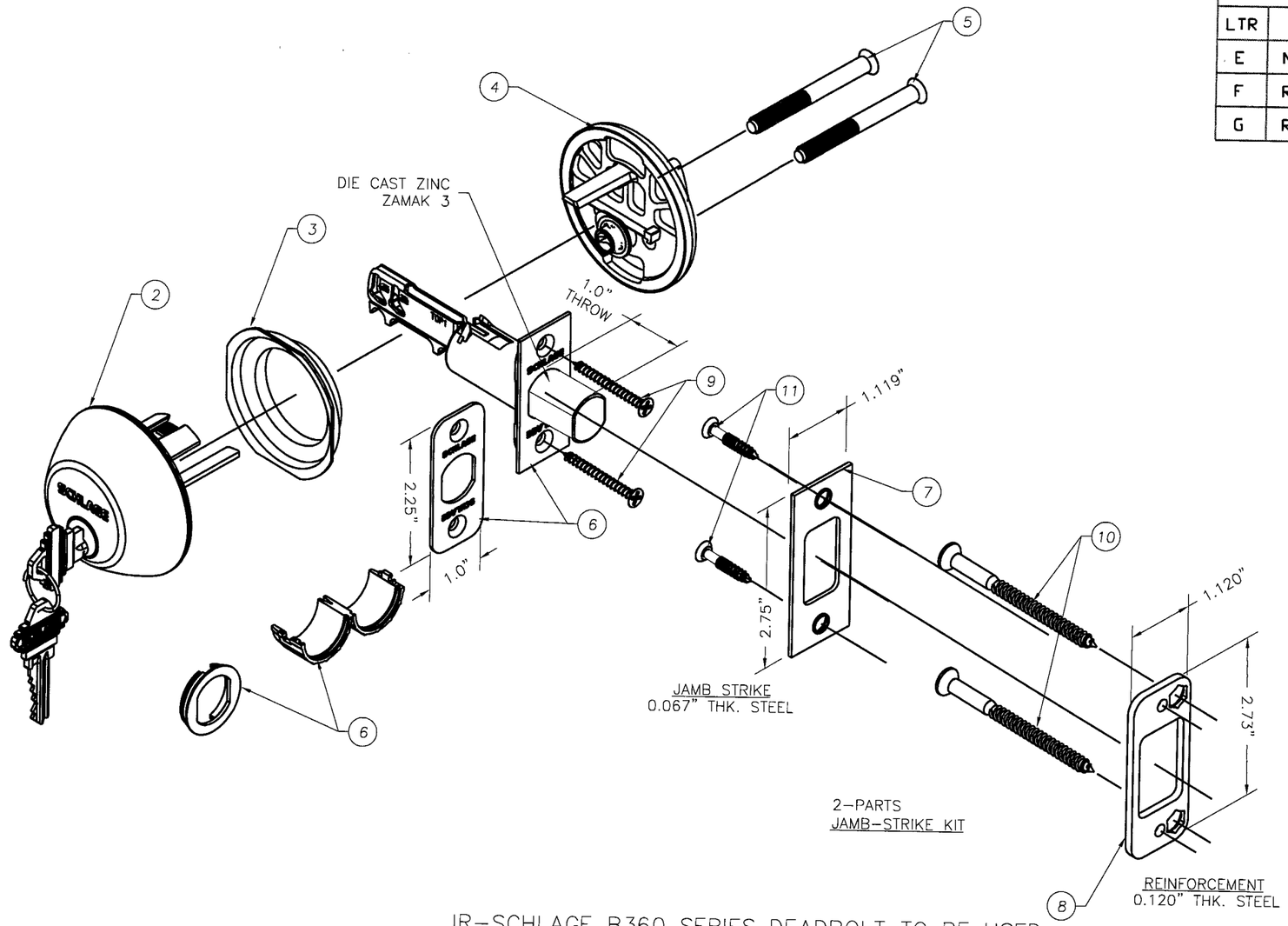

IR-SCHLAGE B360 SERIES DEADBOLT TO BE USED
WITH SCHLAGE F-SERIES
(F(A)10/40/51) CYLINDRICAL LOCKS OR COBRA
(FE575/576/577/595/596/597) KEYPAD (KPL)
WITH SCHLAGE F-SERIES LATCH

ITEM	DESCRIPTION
1	SCHLAGE SERIES SINGLE CYL. DEADBOLT B360N
2	OUTSIDE ASSEMBLY
3	RING ADAPTOR
4	THUMBTURN HOUSING ASSEMBLY
5	MOUNTING SCREW 2 1/4" LONG x .244" ø
6	LATCH (THE BOLT IS DIE CAST ZINC-ZAMAK 3)
7	JAMB STRIKE
8	JAMB REINFORCEMENT
9	#8 x 1 1/4" PHILLIPS FLAT HEAD WOOD SCREW
10	#12 X 3" PHILLIPS FLAT HEAD WOOD SCREW
11	#8 x 3/4" PHILLIPS FLAT HEAD WOOD SCREW

DESIGN PRESSURE RATING (OUT-SWING / IN-SWING) MAX. 3'0 x 8'0 DOOR	
+67.0psf	-67.0psf

8/23/08
FL 46718

PRODUCT RENEWED
as complying with the Florida
Buiding Code
Acceptance No 08-0908.19
Expiration Date NOV 28, 2013
By Ishag I. Chanda
Miami Dade Product Control
Division

THIRD ANGLE PROJECTION

DRAWN	DATE
ROF	1/28/03
CHECKED	
APPROVED	
ENG. APPVL	

Ingersoll Rand
Security Technologies
111 Congressional Blvd., Suite 200
Carmel, Indiana 46032

TITLE MIAMI-DADE COUNTY APPROVAL
SCHLAGE LOCK COMPANY

B360 SCHLAGE
SERIES DEADBOLT

SIZE	FLAT	DWG NO.	REV
		S-2303 SHEET 4 OF 12	G

SCALE: NTS AUTOCAD

IR-SCHLAGE B260 SERIES DEADBOLT TO BE USED WITH SCHLAGE F-SERIES (F(A)10/40/51) CYLINDRICAL LOCKS OR COBRA (FE575/576/577/595/596/597) KEYPAD (KPL) WITH SCHLAGE F-SERIES LATCH

DESIGN PRESSURE RATING (OUT-SWING / IN-SWING) MAX. 3'0 x 8'0 DOOR	
+67.0psf	-67.0psf

REVISIONS			
LTR	DESCRIPTION	DATE	APPROVED
E	NEW BORDER, REVD NOTE YMF	11/02/05	
F	REVISED PER DC BCCO YMF	02.13.06	
G	REVISED PER DC BCCO YMF	05/02/06	

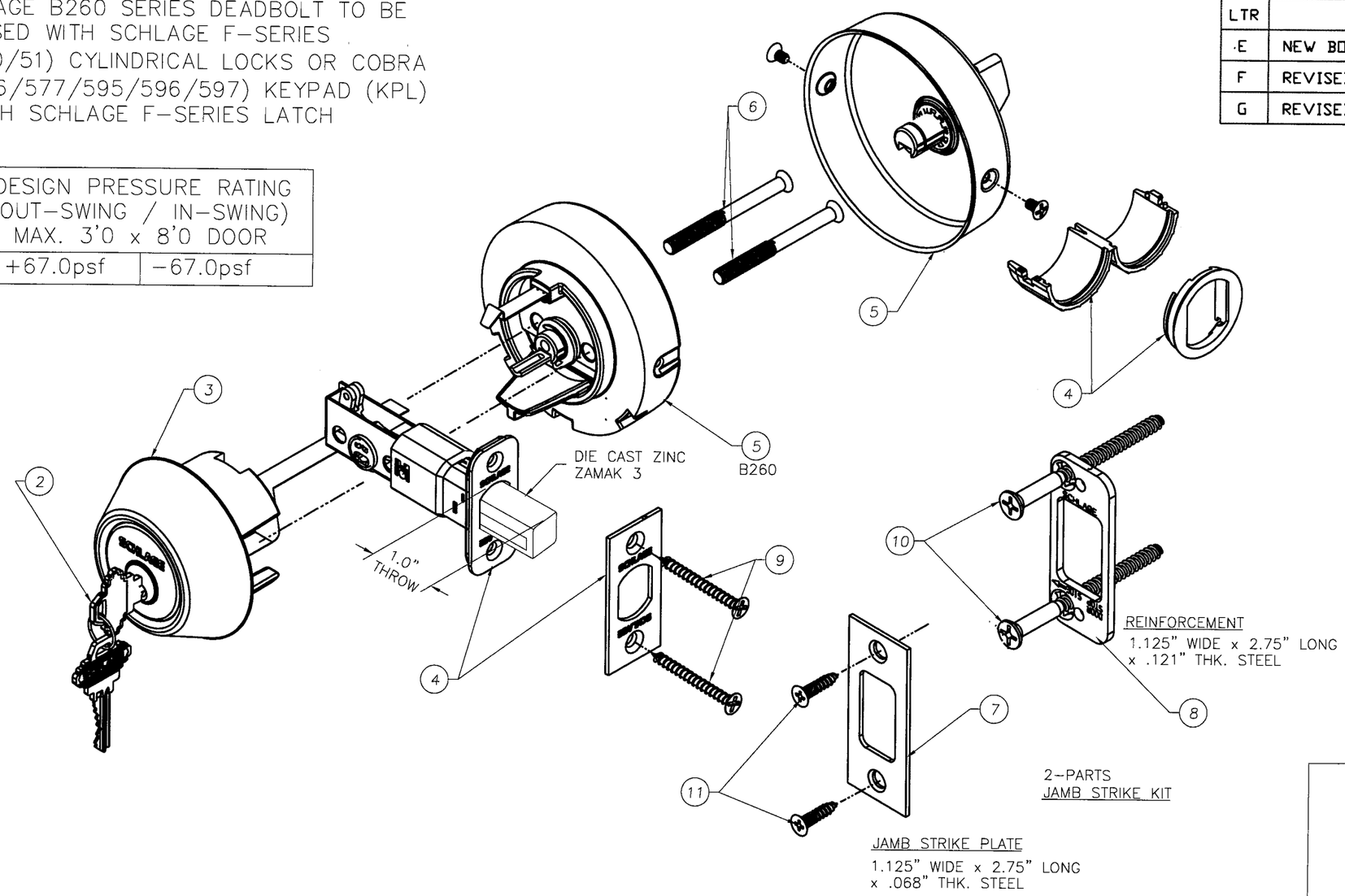

8/23/08
FL 46718

ITEM	DESCRIPTION
1	SCHLAGE B260 SERIES DEADBOLT
2	KEY
3	ASSEMBLY HOUSING OUTSIDE
4	LATCH, B260 (BOLT MATERIAL IS DIE CAST ZINC-ZAMAK 3)
5	ASSEMBLY, INSIDE TURN
6	SCREW, MOUNTING
7	JAMB STRIKE STANDARD
8	REINFORCER, STRIKE
9	#8 x 1 1/4" PHILLIPS FLAT HEAD WOOD SCREW
10	#12 X 3" PHILLIPS FLAT HEAD WOOD SCREW STRIKE REINFORCER
11	#8 X 3/4" PHILLIPS FLAT HEAD WOOD SCREW

PRODUCT RENEWED
as complying with the Florida Buiding Code
Acceptance No OE-0908-19
Expiration Date NOV 28, 2013
By Ishaq I. Chanda
Miami Dade Product Control Division

Ingersoll Rand
Security Technologies
111 Congressional Blvd., Suite 200
Carmel, Indiana 46032

THIRD ANGLE PROJECTION

DRAWN ROF	DATE 1/28/03
CHECKED	
APPROVED	
ENG. APPVL	

TITLE MIAMI-DADE COUNTY APPROVAL
SCHLAGE LOCK COMPANY
B260
DEADBOLT

SIZE	FLAT	DWG NO. S-2303	SHEET 5 OF 12	REV G
SCALE: NTS	AUTOCAD			

REVISIONS			
LTR	DESCRIPTION	DATE	APPROVED
E	NEW BORDER, REVD NOTE YMF	11/02/05	
F	REVISED PER DC BCCO YMF	02.13.06	

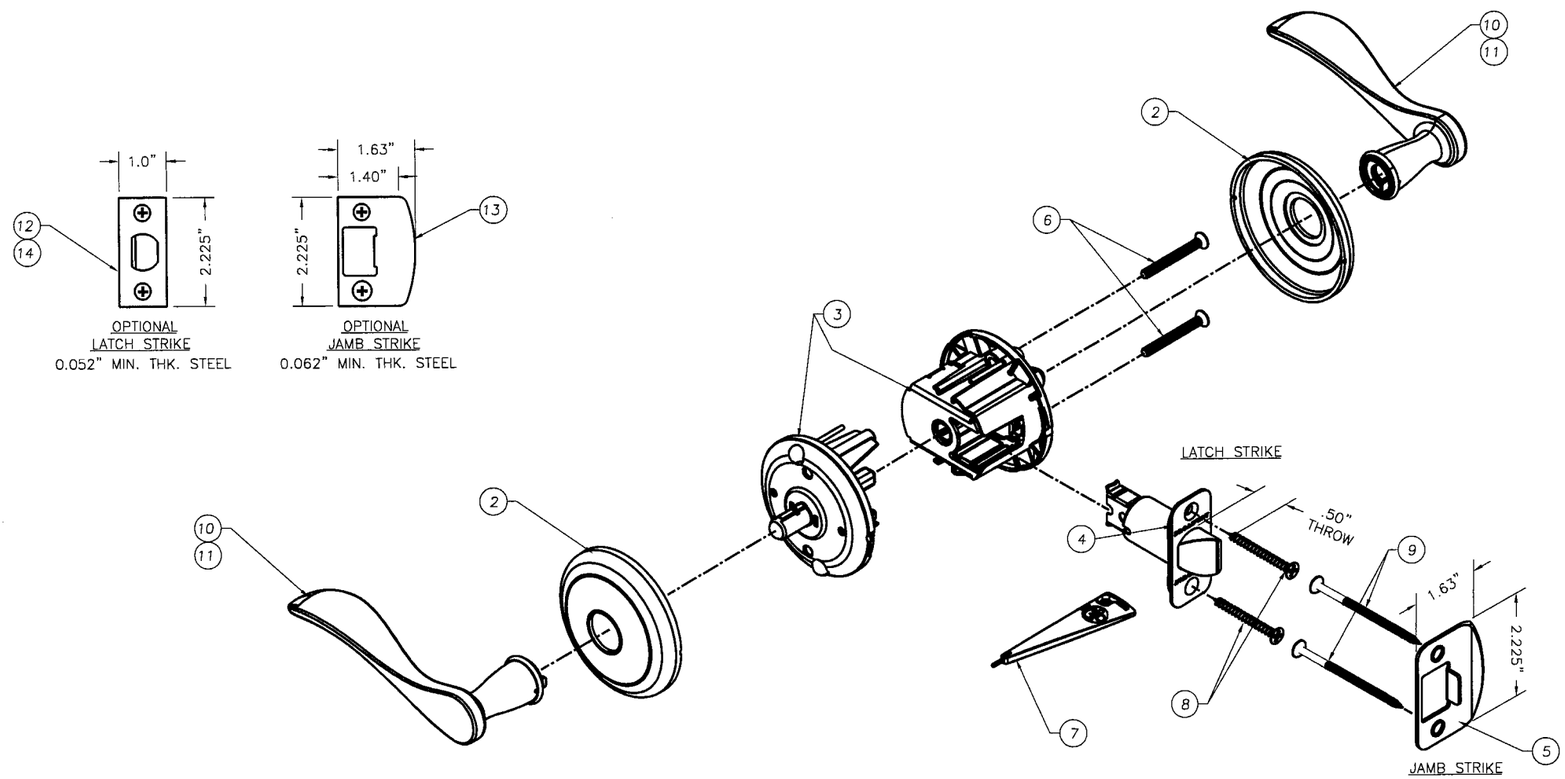

IR-BROADWAY U-SERIES (U10/40/51)
CYLINDRICAL LOCK
TO BE USED WITH BROADWAY B1060-SERIES DEADBOLT

ITEM	DESCRIPTION
1	U10 BROADWAY SERIES HALL & CLOSET
2	ROSE TRIM
3	U10 CHASIS
4	LATCH ASSEMBLY, STANDARD PACKAGE
5	JAMB STRIKE, STANDARD PACKAGE
6	MOUNTING SCREW
7	WRENCH
8	#8 X 1 1/4 PHILLIPS FLAT HEAD WOOD SCREW
9	#8 2 1/2 PHILLIPS FLAT HEAD WOOD SCREW
10	KNOB ASSEMBLY
11	LEVER ASSEMBLY
12	LATCH ASSEMBLY, VISUAL PACKAGE
13	JAMB STRIKE, VISUAL PACKAGE
14	LATCH ASSEMBLY, OPTIONAL

8/23/08
FL 46718

PRODUCT RENEWED
as complying with the Florida
Buiding Code
Acceptance No 08-0908-19
Expiration Date 11/28/2013
By Shaq I. Chanda
Miami Dade Product Control
Division

Ingersoll Rand
Security Technologies
111 Congressional Blvd., Suite 200
Carmel, Indiana 46032

THIRD ANGLE PROJECTION

DRAWN ROF	DATE 1/28/03
CHECKED	
APPROVED	
ENG. APPVL	

TITLE MIAMI-DADE COUNTY APPROVAL
SCHLAGE LOCK COMPANY
BROADWAY U-SERIES
PASSAGE (KNOB/LEVER)

SIZE	FLAT	DWG NO. S-2303 SHEET 6 OF 12	REV F
SCALE: NTS	AUTOCAD		

REVISIONS			
LTR	DESCRIPTION	DATE	APPROVED
E	NEW BORDER, REVD NOTE YMF	11/02/05	
F	REVISED PER DC BCCO YMF	02.13.06	
G	REVISED PER DC BCCO YMF	05/02/06	

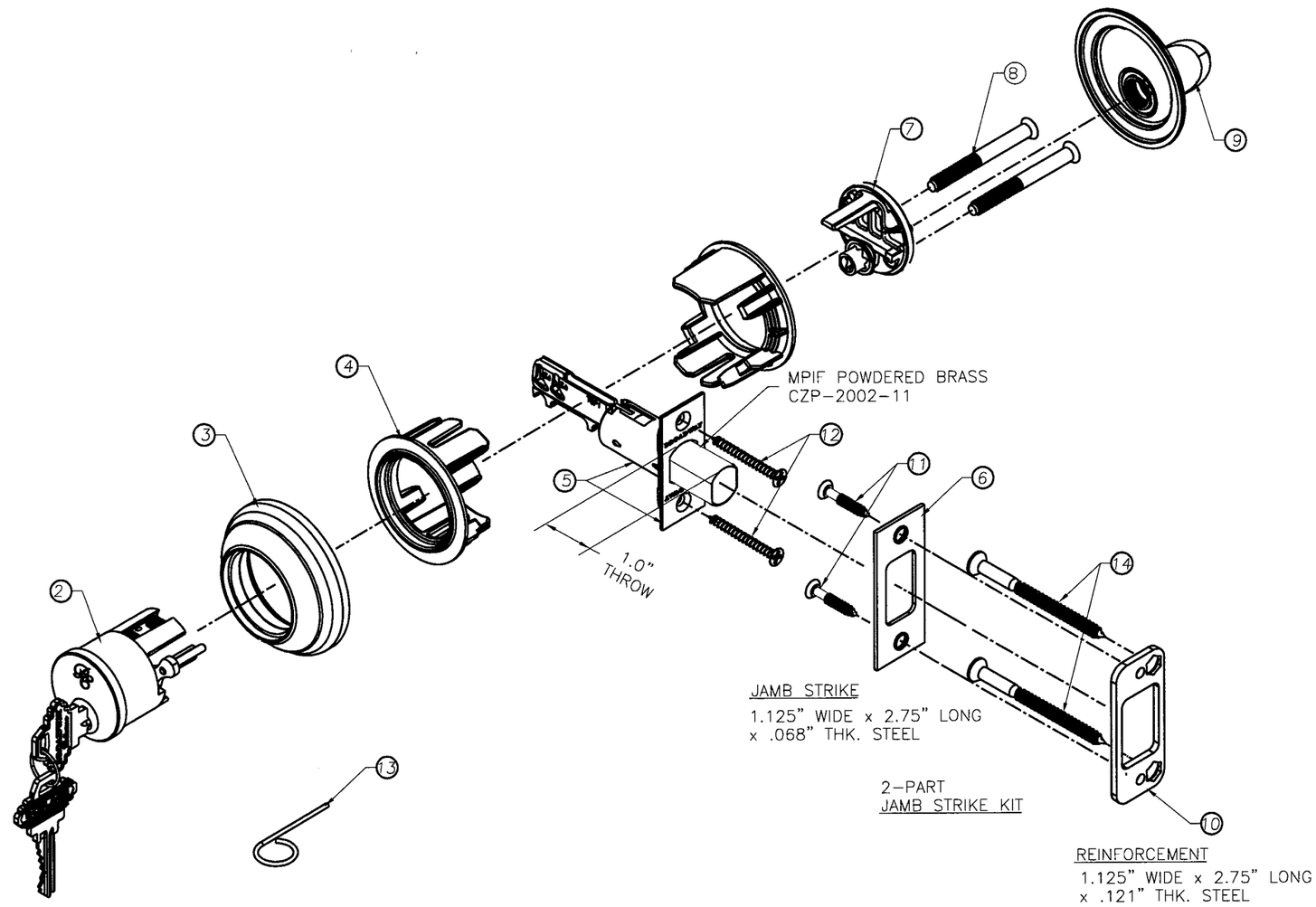

8/23/08
FL46718

ITEM	DESCRIPTION	PART NUMBERS
1	BROADWAY SERIES DEADBOLT LOCK B1060 CLS 625	B1060 CLS 625
2	OUTSIDE CYLINDER ASSEMBLY	R125-060
3	SPIN RING	01-219
4	IMPACT SHELL	B500-646
5	LATCH ASSEMBLY SQUARE CORNER (BOLT MATERIAL MPIF POWDERED BRASS CZP-2002-11)	11-134
6	JAMB STRIKE PACKAGE STANDARD PACK	10-063
7	INSIDE HOUSING ASSEMBLY	R125-042
8	MOUNTING SCREW	B300-112
9	THUMB TURN ASSEMBLY	01-232-DES
10	JAMB STRIKE REINFORCEMENTS	37-016
11	#8 x 3/4" PHILLIPS FLAT HEAD WOOD SCREW	-
12	#8 X 1 1/4" PHILLIPS FLAT HEAD WOOD SCREW	-
13	WRENCH	M504-271
14	#12 X 3 1/2" PHILLIPS FLAT HEAD WOOD SCREW	-

IR-B1060 BROADWAY SERIES DEADBOLT
TO BE USED WITH BROADWAY U-SERIES
(U10/40/51) CYLINDRICAL LOCKS OR COBRA
(FE575/576/577/595/596/597) KEYPAD (KPL)
WITH SCHLAGE F-SERIES LATCH

DESIGN PRESSURE RATING (OUT-SWING / IN-SWING) MAX. 3'0 x 8'0 DOOR	
+67.0psf	-67.0psf

PRODUCT RENEWED
as complying with the Florida
Buiding Code
Acceptance No 08-0908.19
Expiration Date Nov 29, 2013
By Isaac I. Chayde
Miami Dade Product Control
Division

THIRD ANGLE PROJECTION

DRAWN	DATE
ROF	1/28/03
CHECKED	
APPROVED	
ENG. APPVL	

Ingersoll Rand
Security Technologies
111 Congressional Blvd., Suite 200
Carmel, Indiana 46032

TITLE MIAMI-DADE COUNTY APPROVAL
SCHLAGE LOCK COMPANY
B1060 BROADWAY
SERIES DEADBOLT

SIZE	FLAT	DWG NO.	REV
		S-2303 SHEET 7 OF 12	G

SCALE: NTS AUTOCAD

REVISIONS			
LTR	DESCRIPTION	DATE	APPROVED
E	NEW BORDER, REVD NOTE YMF	11/02/05	
F	REVISED PER DC BCCO YMF	02.13.06	

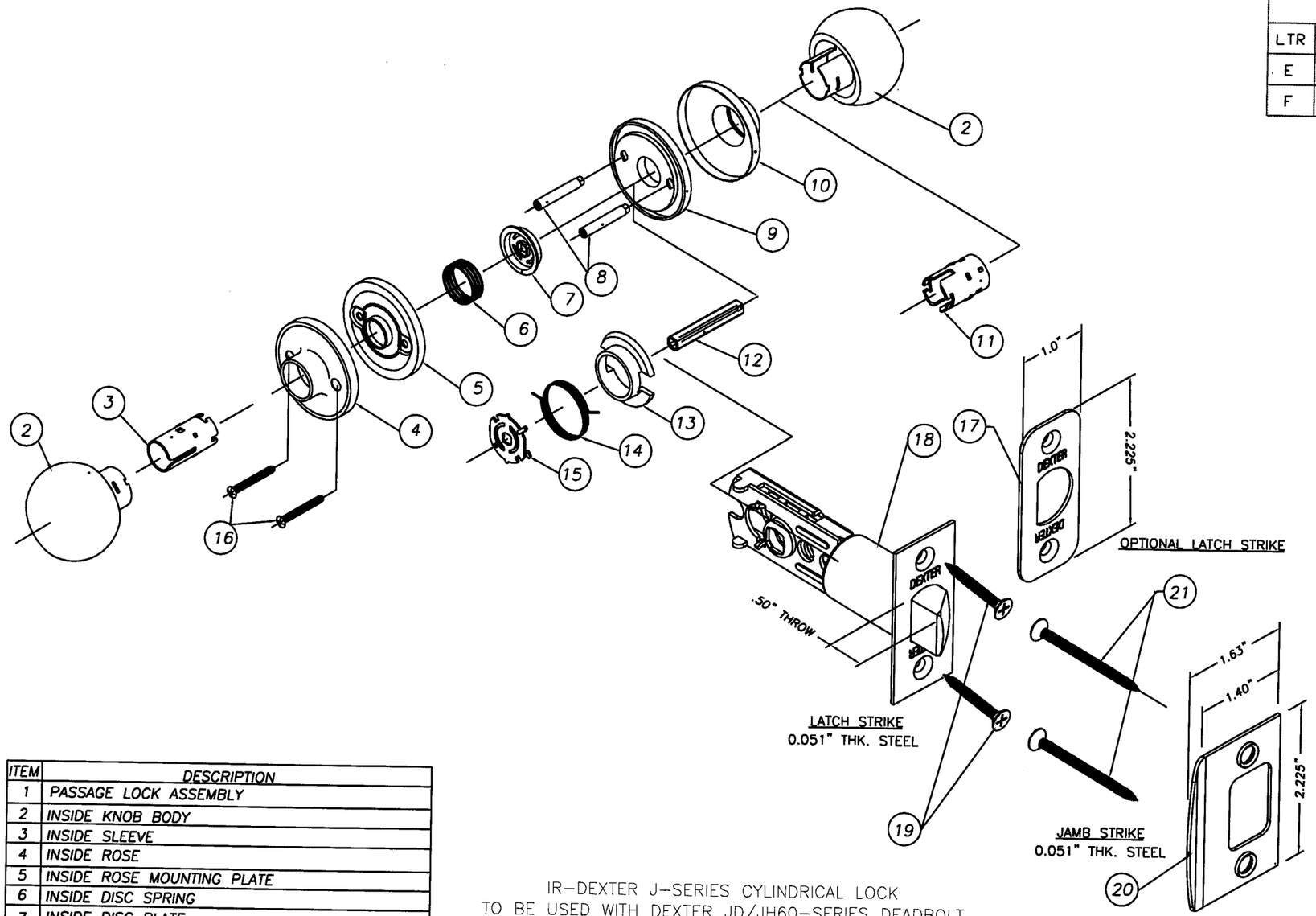

ITEM	DESCRIPTION
1	PASSAGE LOCK ASSEMBLY
2	INSIDE KNOB BODY
3	INSIDE SLEEVE
4	INSIDE ROSE
5	INSIDE ROSE MOUNTING PLATE
6	INSIDE DISC SPRING
7	INSIDE DISC PLATE
8	ROSE STUD
9	OUTSIDE ROSE PLATE
10	OUTSIDE ROSE
11	OUTSIDE SPINDLE
12	LATCH SPINDLE
13	SPINDLE
14	KNOB RETURN SPRING
15	STOP SPRING PLATE
16	MACHINE SCREW
17	FRONT FACE PLATE
18	LATCH UNIT
19	#8 X 1 1/4" PHILLIPS FLAT HEAD WOOD SCREW
20	JAMB STRIKE PLATE
21	#8 X 2 1/2" PHILLIPS FLAT HEAD WOOD SCREW

IR-DEXTER J-SERIES CYLINDRICAL LOCK
TO BE USED WITH DEXTER JD/JH60-SERIES DEADBOLT

8/23/08
FL 46718

PRODUCT RENEWED
as complying with the Florida Building Code
Acceptance No 08-0908.19
Expiration Date Nov 28, 2013
By [signature]
Miami Dade Product Control Division

THIRD ANGLE PROJECTION

Ingersoll Rand
Security Technologies
111 Congressional Blvd., Suite 200
Carmel, Indiana 46032

DRAWN ROF	DATE 1/28/03	TITLE MIAMI-DADE COUNTY APPROVAL SCHLAGE LOCK COMPANY DEXTER SERIES J10 CNA PASSAGE
CHECKED		
APPROVED		SIZE FLAT — DWG NO. S-2303 SHEET 8 OF 12 — REV F
ENG. APPVL		SCALE: NTS — AUTOCAD

REVISIONS			
LTR	DESCRIPTION	DATE	APPROVED
E	NEW BORDER, REV'D NOTE YMF	11/02/05	
F	REVISED PER DC BCCO YMF	02.13.06	
G	REVISED PER DC BCCO YMF	05/02/06	

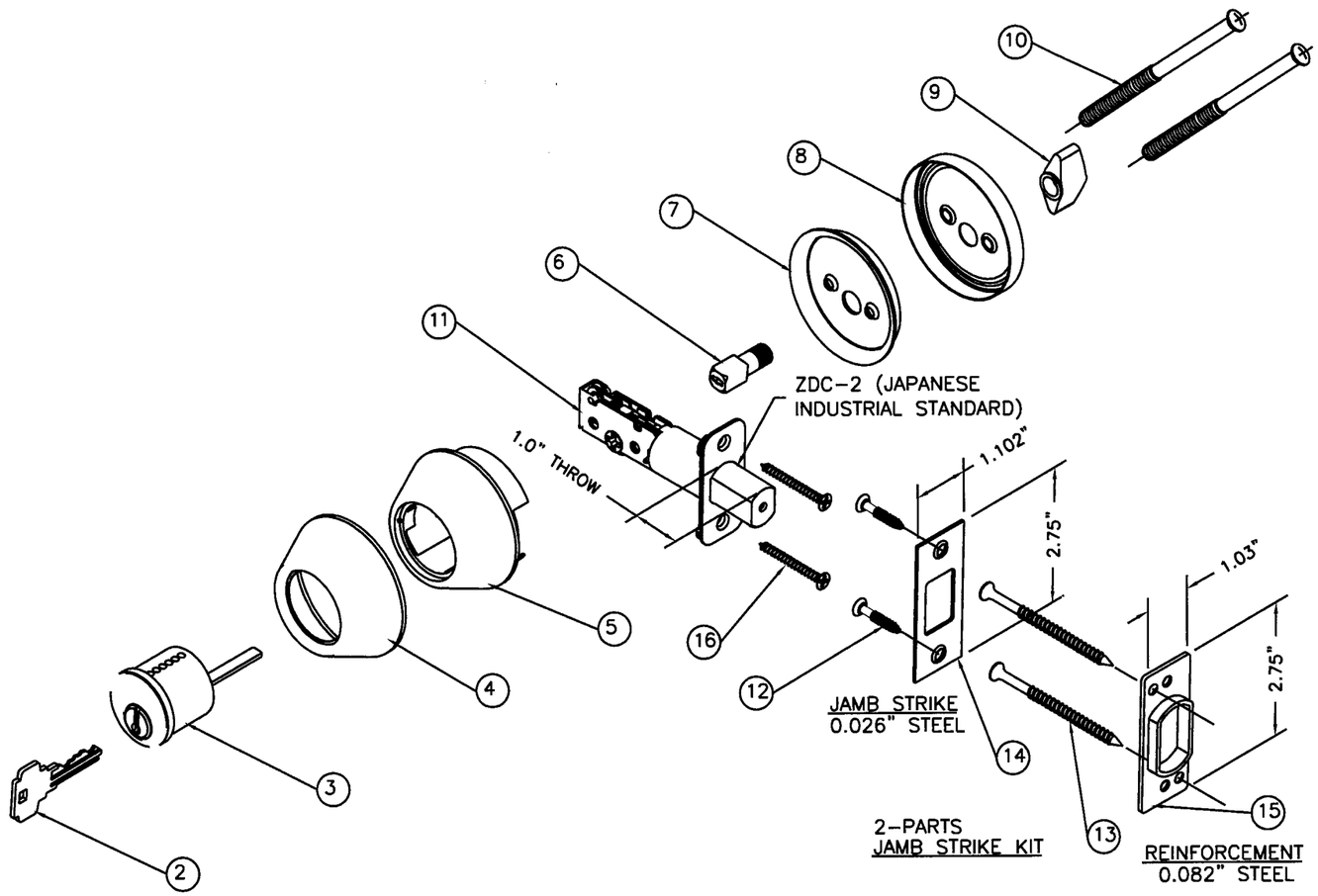

ITEM	DESCRIPTION
1	SINGLE CYLINDER DEADBOLT
2	KEY
3	KEY UNIT
4	OUTSIDE ROSE
5	RING BODY
6	STUD
7	INSIDE ROSE
8	INSIDE ROSE MOUNTING PLATE
9	TURN BUTTON
10	MACHINE SCREW
11	LATCH UNIT COMPLETED (BOLT MATERIAL ZDC-2 JAPANESE INDUSTRIAL STANDARD)
12	#8 X 3/4" PHILLIPS FLAT HEAD WOOD SCREW
13	#12 X 3" PHILLIPS FLAT HEAD WOOD SCREW
14	STRIKE PLATE (JAMB)
15	STRIKE PLATE REINFORCEMENT (JAMB)
16	#8 X 1 1/4" PHILLIPS FLAT HEAD WOOD SCREW

IR-DEXTER JD/JH60-SERIES CYLINDRICAL DEADBOLT
TO BE USED WITH DEXTER J-SERIES LOCK
OR SCHLAGE COBRA SERIES KEYPAD (KPL) (WITH
SCHLAGE F-LATCH)

DESIGN PRESSURE RATING (OUT-SWING / IN-SWING) MAX. 3'0 x 8'0 DOOR	
+67.0psf	-67.0psf

8/23/08
FL46118

PRODUCT RENEWED
as complying with the Florida
Building Code
Acceptance No. 08-0908.19
Expiration Date NOV 25, 2013
By Ishaq I. Chunda
Miami Dade Product Control
Division

THIRD ANGLE PROJECTION

DRAWN ROF	DATE 1/28/03
CHECKED	
APPROVED	
ENG. APPVL	

Ingersoll Rand
Security Technologies
111 Congressional Blvd., Suite 200
Carmel, Indiana 46032

TITLE MIAMI-DADE COUNTY APPROVAL
SCHLAGE LOCK COMPANY

DEXTER SERIES
JD/JH60 SERIES CYLINDRICAL DEADLOCK

SIZE	FLAT	DWG NO. S-2303 SHEET 9 OF 12	REV G
SCALE: NTS	AUTOCAD		

ITEM	DESCRIPTION
1	SCHLAGE S200 INTERCONNECT ASSEMBLY
2	SCREW, TRIM
3	ESCUTCHEON ASSY.
4	SCREWS, MOUNTING
5	CHASSIS ASSY. INSIDE
6	SCREWS, MOUNTING DB
7	INTERCONNECT ASSY.
8	JAMB STRIKE PKG
9	REINFORCEMENT STRIKE PKG. (JAMB)
10	STRIKE PKG. DB (JAMB)
11	DEADLATCH & DEADBOLT (BOLT MATERIAL IS SINTERED IRON FC-0208-40)
12	CHASSIS ASSY. OUTSIDE
13	FIRE CUP
14	BAR
15	RING
16	BLOCKER RING
17	TRIM RING
18	SCREW CYLINDER HOUSING
19	HOUSING AND FACEPLATE ASSY.
20	#8 X 2 1/2" PHILLIPS FLAT HEAD WOOD SCREW
21	#8 X 1 1/4" PHILLIPS FLAT HEAD WOOD SCREW
22	#12 X 3" PHILLIPS FLAT HEAD WOOD SCREW
23	CYLINDER
24	#8 X 3/4" PHILLIIPS FLAT HEAD WOOD SCREW

IR-SCHLAGE SERIES S200 INTERCONNECT
W/DEADBOLT & LATCH

DESIGN PRESSURE RATING (OUT-SWING / IN-SWING		
DOOR SIZE	DESIGN PRESSURE RATING	
3'0 x 6'8	+67.0psf	-67.0psf
3'0 x 8'0	+55.0psf	-55.0psf

REVISIONS				
LTR	DESCRIPTION		DATE	APPROVED
E	NEW BORDER	YMF	11/02/05	
F	REVISED PER DC BCCO	YMF	02.13.06	

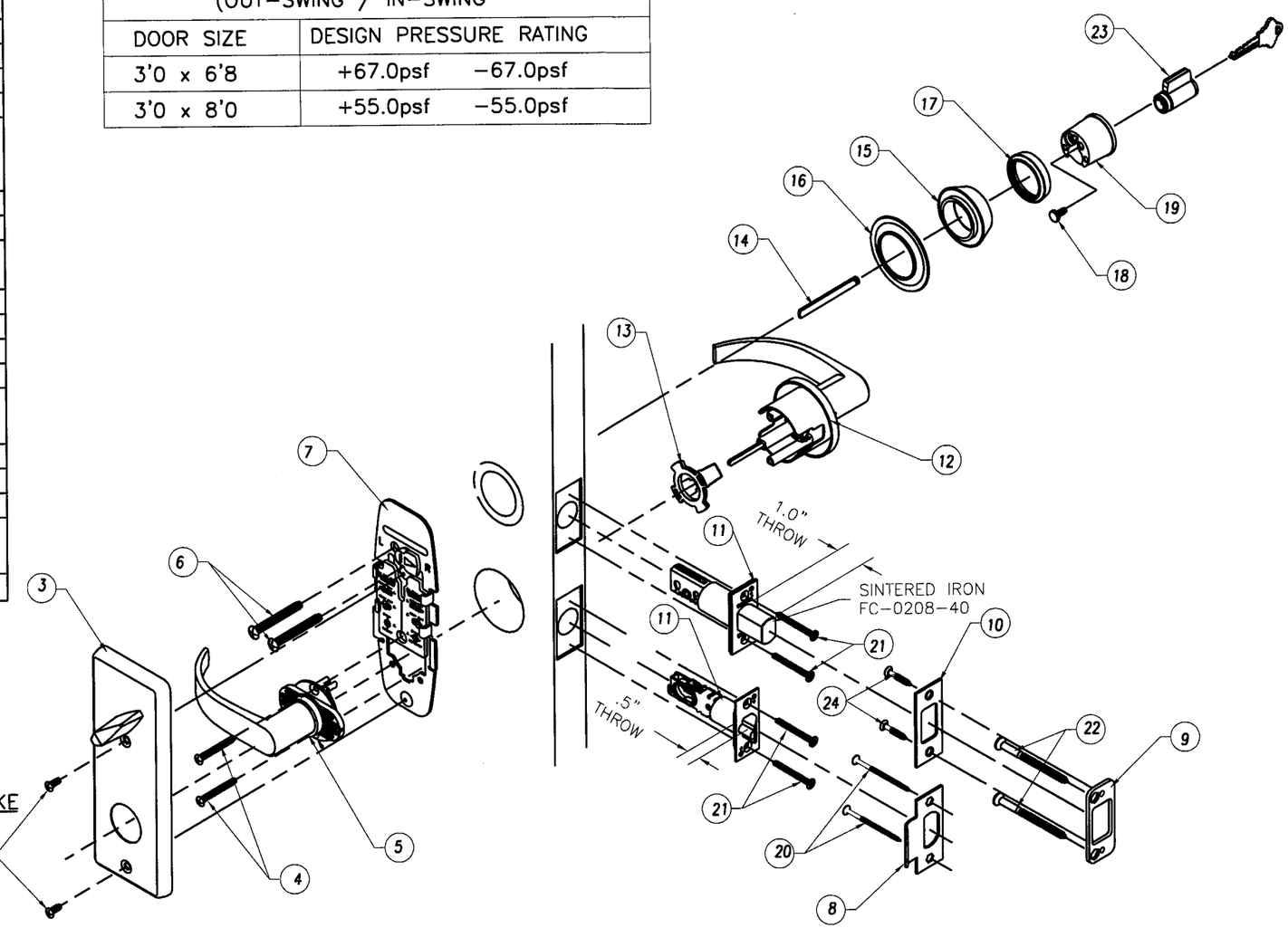

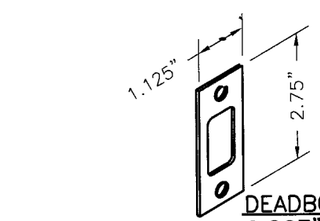

(10) DEADBOLT JAMB STRIKE
0.067" THK. STEEL

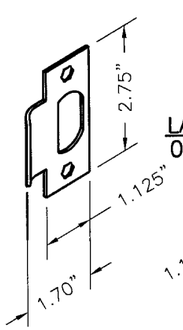

(8) LATCH JAMB STRIKE
0.062" THK. STEEL

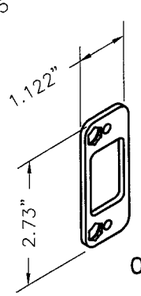

(9) REINFORCEMENT
0.122" THK. STEEL

PRODUCT RENEWED
as complying with the Florida
Building Code
Acceptance No 08-0908.19
Expiration Date Nov 28, 2013
By Ishaq J. Chanda
Miami Dade Product Control
Division

THIRD ANGLE PROJECTION

DRAWN	DATE
ROF	1/28/03
CHECKED	
APPROVED	
ENG. APPVL	

Ingersoll Rand
Security Technologies
111 Congressional Blvd., Suite 200
Carmel, Indiana 46032

TITLE MIAMI-DADE COUNTY APPROVAL
SCHLAGE LOCK COMPANY
SCHLAGE S200 SERIES
INTERCONNECTED LOCK

SIZE FLAT | DWG NO. S-2303 | SHEET 10 OF 12 | REV F

SCALE: NTS | AUTOCAD

8/23/08
PL46718

REVISIONS				
LTR	DESCRIPTION		DATE	APPROVED
A	NEW SHEET	YMF	11/02/05	
G	REVISED PER DC BCCO	YMF	05/02/06	

COBRA FE575/576/577 AND COBRA PLUS FE595/596/597 SERIES KEYPAD (KPL) (WITH SCHALGE F-LATCH)
TO BE USED WITH FOLLOWING DEADLOCKS:
SCHLAGE B260, B360 SERIES
DEXTER JD/JH60 SERIES
BROADWAY B1060 SERIES

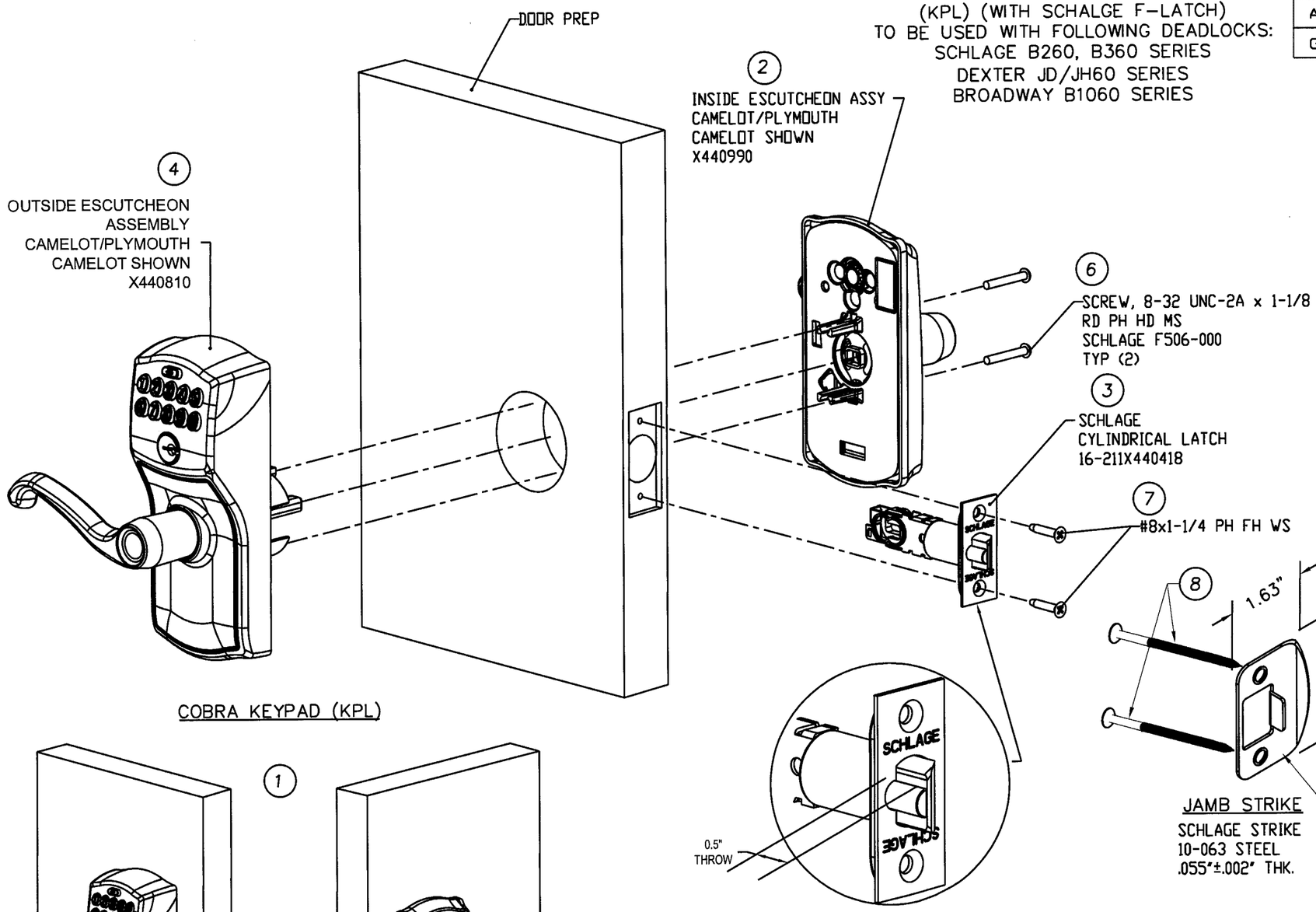

ITEM	DESCRIPTION
1	COBRA LOCK ASSEMBLY
2	INSIDE ESCUTCHEON ASSEMBLY
3	CYLINDRICAL LATCH ASSEMBLY
4	OUTSIDE ESCUTCHEON ASSEMBLY
5	JAMB STRIKE (10-063)
6	SCREWS, MOUNTING, #8-32 UNC-2A X 1-1/8
7	LATCH MOUNTING SCREW PACK (F206-175) #8x1-1/4 PH FH WS
8	#8 X 2 1/2" PHILLIPS FLAT HEAD WOOD SCREW

8/23/08
FL 46718

PRODUCT RENEWED
as complying with the Florida
Building Code
Acceptance No 08-0908.19
Expiration Date Nov 28, 2013
By Ishaq I. Chanda
Miami Dade Product Control
Division

THIRD ANGLE PROJECTION

DRAWN	YMF	DATE 11/02/05
CHECKED		
APPROVED		
ENG. APPVL		

Ingersoll Rand
Security Technologies
111 Congressional Blvd., Suite 200
Carmel, Indiana 46032

TITLE MIAMI-DADE COUNTY APPROVAL
SCHLAGE LOCK COMPANY

COBRA LOCK
(INSIDE ESCUTCHEON)

SIZE	FLAT	DWG NO. S-2303	SHEET 11 OF 12	REV G
SCALE: NTS	AUTOCAD			

COBRA FE575/576/577 AND COBRA
PLUS FE595/596/597 SERIES KEYPAD
(KPL) (WITH SCHALGE F-LATCH)
TO BE USED WITH FOLLOWING DEADLOCKS:
SCHLAGE B260, B360 SERIES
DEXTER JD/JH60 SERIES
BROADWAY B1060 SERIES

REVISIONS				
LTR	DESCRIPTION		DATE	APPROVED
A	NEW SHEET	YMF	11/02/05	
B	REVISED PER DC BCCO	YMF	02.13.06	
G	REVISED PER DC BCCO	YMF	05/02/06	

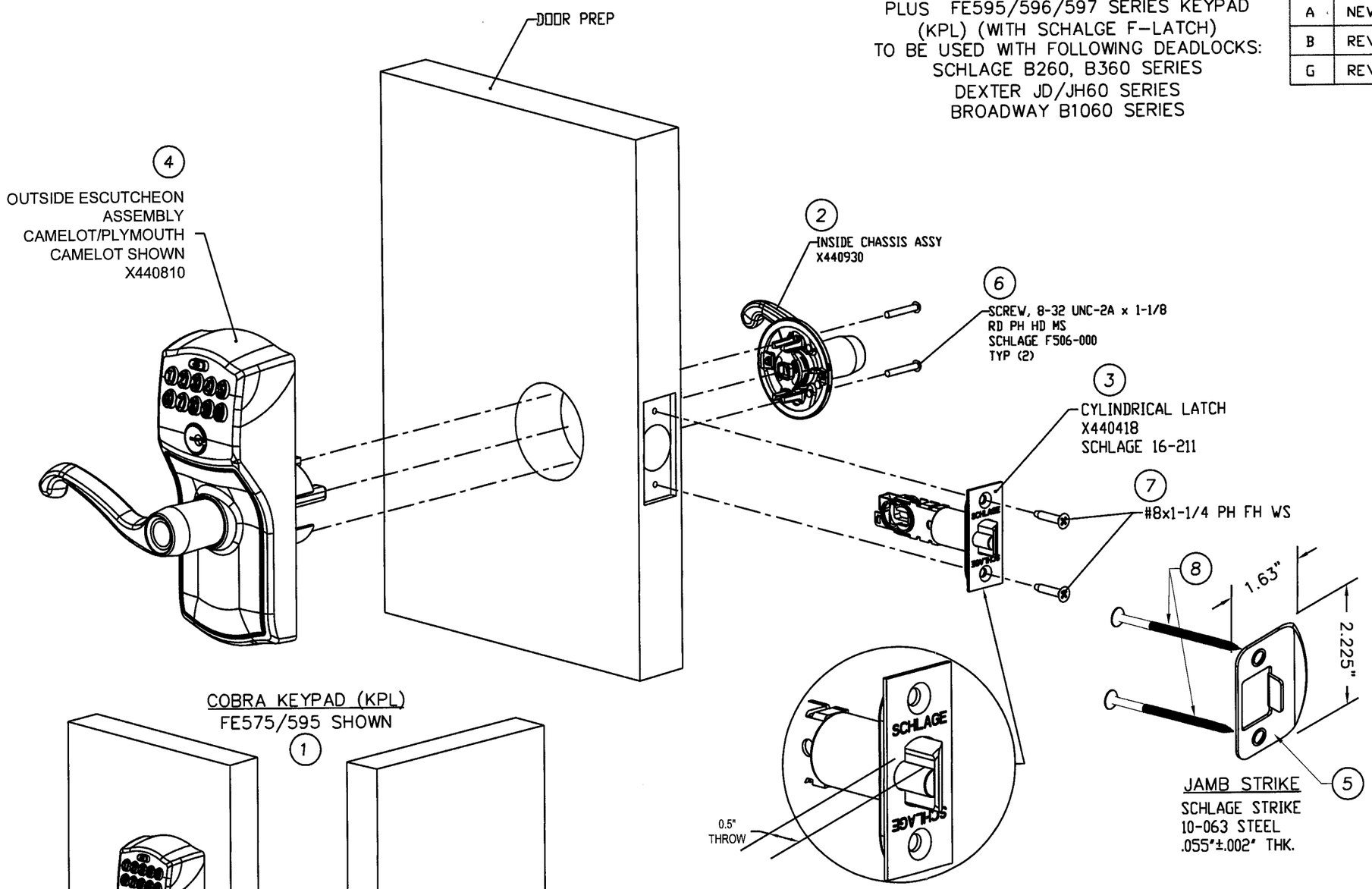

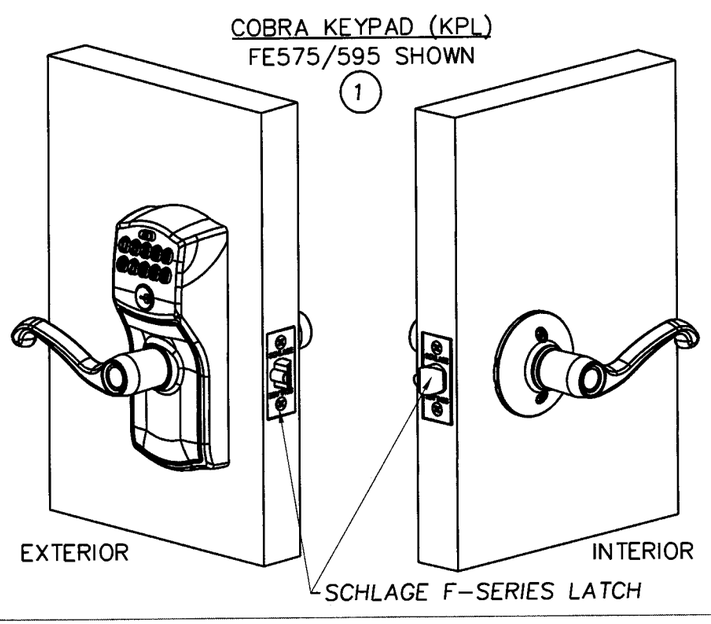

ITEM	DESCRIPTION
1	COBRA LOCK ASSEMBLY
2	INSIDE ROSE CHASSIS ASSEMBLY
3	CYLINDRICAL LATCH ASSEMBLY
4	OUTSIDE ESCUTCHEON ASSEMBLY
5	JAMB STRIKE (10-063)
6	SCREWS, MOUNTING, #8-32 UNC-2A X 1-1/8
7	LATCH MOUNTING SCREW PACK (F206-175) #8x1-1/4 PH FH WS
8	#8 X 2 1/2" PHILLIPS FLAT HEAD WOOD SCREW

8/23/08
FL 46718

PRODUCT RENEWED
as complying with the Florida
Building Code
Acceptance No 08-0908.19
Expiration Date Nov 28, 2013
By Isaac I. Chanda
Miami Dade Product Control
Division

THIRD ANGLE PROJECTION

DRAWN	YMF	DATE 11/02/05
CHECKED		
APPROVED		
ENG. APPVL		

Ingersoll Rand
Security Technologies
111 Congressional Blvd., Suite 200
Carmel, Indiana 46032

TITLE MIAMI-DADE COUNTY APPROVAL
SCHLAGE LOCK COMPANY
COBRA/COBRA PLUS KEYPAD LOCK
WITH SCHLAGE F-SERIES LATCH
(INSIDE ROSE)

SIZE FLAT | DWG NO. S-2303 SHEET 12 OF 12 | REV G

SCALE: NTS | AUTOCAD