MIAMI-DADE COUNTY
BUILDING CODE COMPLIANCE OFFICE (BCCO)
PRODUCT CONTROL DIVISION

MIAMI-DADE COUNTY, FLORIDA
METRO-DADE FLAGLER BUILDING
140 WEST FLAGLER STREET, SUITE 1603
MIAMI, FLORIDA 33130-1563
(305) 375-2901 FAX (305) 372-6339
www.maimidade.gov/buildingcode

NOTICE OF ACCEPTANCE (NOA)

Alufab, Inc.
1300 NW 38th Avenue
Opa Locka, FL 33054

SCOPE:

This NOA is being issued under the applicable rules and regulations governing the use of construction materials. The documentation submitted has been reviewed by Miami-Dade County Product Control Division and accepted by the Board of Rules and Appeals (BORA) to be used in Miami Dade County and other areas where allowed by the Authority Having Jurisdiction (AHJ).

This NOA shall not be valid after the expiration date stated below. The Miami-Dade County Product Control Division (In Miami Dade County) and/or the AHJ (in areas other than Miami Dade County) reserve the right to have this product or material tested for quality assurance purposes. If this product or material fails to perform in the accepted manner, the manufacturer will incur the expense of such testing and the AHJ may immediately revoke, modify, or suspend the use of such product or material within their jurisdiction. BORA reserves the right to revoke this acceptance, if it is determined by Miami-Dade County Product Control Division that this product or material fails to meet the requirements of the applicable building code.

This product is approved as described herein, and has been designed to comply with the Florida Building Code, including the High Velocity Hurricane Zone.

DESCRIPTION: Aluminum Louver System

APPROVAL DOCUMENT: Drawing No. **08-204**, titled "Aluminum Louver System", sheets 1 through 5 of 5, dated 08/13/08, prepared by Tilteco, Inc., signed and sealed by Walter A. Tillit, P.E., bearing the Miami-Dade County Product Control revision stamp with the Notice of Acceptance number and expiration date by the Miami-Dade County Product Control Division.

MISSILE IMPACT RATING: Large and Small Missile Impact Resistant

LABELING: Each unit shall bear a permanent label with the manufacturer's name or logo, city, state and following statement: "Miami-Dade County Product Control Approved", unless otherwise noted herein.

RENEWAL of this NOA shall be considered after a renewal application has been filed and there has been no change in the applicable building code negatively affecting the performance of this product.

TERMINATION of this NOA will occur after the expiration date or if there has been a revision or change in the materials, use, and/or manufacture of the product or process. Misuse of this NOA as an endorsement of any product, for sales, advertising or any other purposes shall automatically terminate this NOA. Failure to comply with any section of this NOA shall be cause for termination and removal of NOA.

ADVERTISEMENT: The NOA number preceded by the words Miami-Dade County, Florida, and followed by the expiration date may be displayed in advertising literature. If any portion of the NOA is displayed, then it shall be done in its entirety.

INSPECTION: A copy of this entire NOA shall be provided to the user by the manufacturer or its distributors and shall be available for inspection at the job site at the request of the Building Official.

This NOA **revises and renews NOA # 03-1205.01** and consists of this page 1 and evidence pages E-1 and E-2, as well as approval document mentioned above.

The submitted documentation was reviewed by **Carlos M. Utrera, P.E.**

MIAMI-DADE COUNTY APPROVED

10/20/08

NOTICE OF ACCEPTANCE: EVIDENCE SUBMITTED

A. DRAWINGS

1. Drawing No. **08-204**, titled "Aluminum Louver System", sheets 1 through 5 of 5, dated 08/13/08, prepared by Tilteco, Inc., signed and sealed by Walter A. Tillit, P.E.

B. TESTS

1. Test report on Large Missile Impact Test per PA 201, Test, Cyclic Wind Pressure Test per PA 203, Test and Uniform Static Air Pressure Test per PA 202 of "Aluminum Louver System", prepared by Construction Testing Corporation, report No. 00-039, dated 08/10/2000, signed and sealed by Y. G. Kuri, P.E.
2. Clarification letter issued by Construction Testing Corporation on 10/31/2000, signed by G. Dotzler.
   "Submitted under NOA # 03-1205.01"

C. CALCULATIONS

1. Allowable Load Calculations, dated 02/18/00, pages 1 to 10 of 10, prepared by Tilteco, Inc., signed and sealed by Walter A. Tillit, P.E.
2. Allowable Load Calculations, dated 10/13/00, pages 1 to 2 of 2, prepared by Tilteco, Inc., signed and sealed by Walter A. Tillit, P.E.
   "Submitted under NOA # 03-1205.01"
3. Anchorage, stress and deflection calculations complying with F.B.C. 2007, prepared by Tilteco, Inc., dated 08/19/08, signed and sealed by Walter A. Tillit, P.E.

D. QUALITY ASSURANCE

1. Miami Dade Building Code Compliance Office (BCCO).

10/20/08

Carlos M. Utrera, P.E.
Product Control Examiner
NOA No. 08-0911.03
Expiration Date: December 28, 2013
Approval Date: November 13, 2008

NOTICE OF ACCEPTANCE: EVIDENCE SUBMITTED

E. MATERIAL CERTIFICATIONS

1. Test report on tensile test of Alufab Aluminum Extrusion, prepared by Certified Testing Laboratories, Report No. **CTL 792F**, dated 08/28/00, signed and sealed by Ramesh Patel, P.E.
   "Submitted under NOA # 03-1205.01"

F. STATEMENTS

1. Code compliance letter issued by Tilteco, Inc., on 08/18/00, signed and sealed by Walter A. Tillit, P.E.
2. No financial interest letter issued by Tilteco, Inc., on 08/17/00, signed and sealed by Walter A. Tillit, P.E.
   "Submitted under NOA # 03-1205.01"
3. Code compliance and drawing changes letter issued by Tilteco, Inc., on 12/13/02, signed and sealed by Walter A. Tillit, P.E.

G. OTHER

1. Notice of Acceptance No. **03-1205.01**, issued to Alufab, Inc., approved on 01/15/04 and expiring on 12/28/08.

10/20/08

Carlos M. Utrera, P.E.
Product Control Examiner
NOA No. 08-0911.03
Expiration Date: December 28, 2013
Approval Date: November 13, 2008

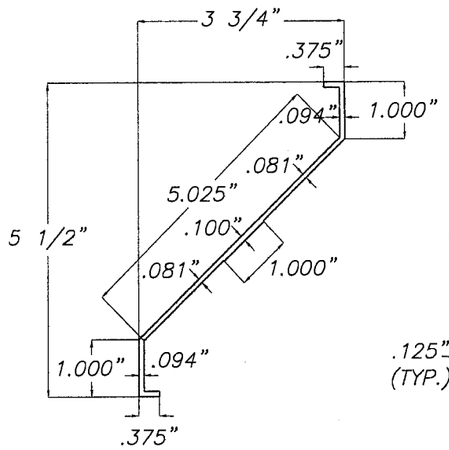

1 LOUVER

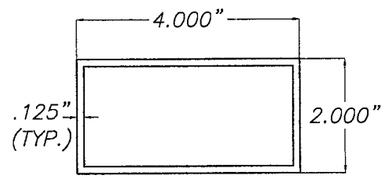

2 SILL/ HEADER TUBES

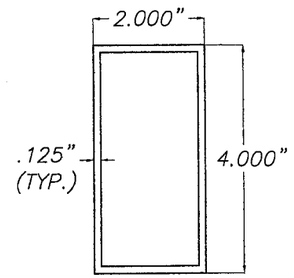

3 VERTICAL MULLION

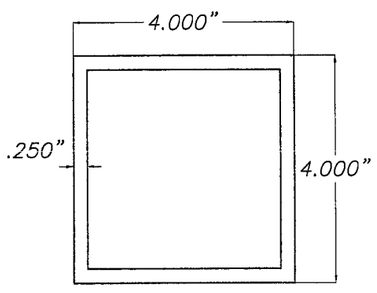

3A VERTICAL MULLION

6061-T6 ALLOY

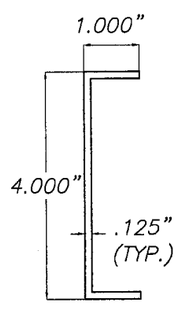

4 JAMB CHANNEL

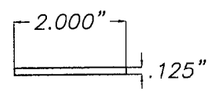

5 LOUVER IMPACT STRAP

COMPONENTS

SCALE: 3/8"=1"

GENERAL NOTES:

1. ALUMINUM LOUVER SYSTEM, SHOWN ON THIS PRODUCT APPROVAL DOCUMENT (P.A.D.) HAS BEEN VERIFIED FOR COMPLIANCE IN ACCORDANCE WITH THE 2007 EDITION OF THE FLORIDA BUILDING CODE.
ALUMINUM LOUVER SYSTEM MAY BE INSTALLED AT HIGH VELOCITY HURRICANE ZONES.
DESIGN WIND LOADS SHALL BE DETERMINED AS PER SECTION 1620 OF THE ABOVE MENTIONED CODE. IN ORDER TO VERIFY THAT ANCHORS ON THIS P.A.D., AS TESTED, WERE NOT OVERSTRESSED, A 33% INCREASE IN ALLOWABLE STRESS FOR WIND LOADS WAS **NOT** USED IN THEIR ANALYSIS.
ALUMINUM LOUVER SYSTEM'S ADEQUACY FOR IMPACT AND FATIGUE RESISTANCE HAS BEEN VERIFIED IN ACCORDANCE WITH SECTION 1626 OF THE ABOVE MENTIONED CODE AS PER PROTOCOLS TAS-201, TAS-202, TAS-203, PER CONSTRUCTION TESTING CORPORATION LAB REPORTS # 00-002 & 00-039 AND AS PER SUBMITTED STRUCTURAL CALCULATIONS, PERFORMED AS PER SECTION 1612 OF THE FLORIDA BUILDING CODE.

2. ALL. ALUMINUM EXTRUSIONS SHALL BE ALUMINUM ASSOCIATION 6063-T6 ALLOY AND TEMPER (UNLESS OTHERWISE NOTED), WITH Fy= 25.0 ksi MINIMUM. THE THICKNESS OF ALL EXTRUSIONS SHALL BE AS SHOWN ON THIS DRAWING.

3. ALL SCREWS TO BE STAINLESS STEEL 304 OR 316 SERIES W/ 50 ksi YIELD POINT AND 90 ksi TENSILE STRENGTH OR CORROSION RESISTANT COATED CARBON STEEL AS PER DIN 50018.
BOLTS AT ④ AND THRU BOLTS AT MULLION TO BE ASTM A-307 GALVANIZED STEEL OR AISI 304 SERIES STAINLESS STEEL.

4. ALL ALUMINUM POP RIVETS TO BE 5052 ALUMINUM ALLOY WITH ALUMINUM MANDREL.

5. ALL ALUMINUM COMPONENTS FRAMING SHALL BE WELDED IN ACCORDANCE WITH THE AMERICAN WELDING SOCIETY AWS D1.2 LATEST EDITION REGULATIONS. USE CERTIFIED WELDERS. USE ER-5356 ELECTRODES.

6. ANCHORS TO POURED CONCRETE OR CONCRETE BLOCK (ASTM C-90) SHALL BE AS FOLLOWS:

NAME	DIAMETER	MIN. EMBEDMENT	SUBSTRATE	MIN. EDGE DISTANCE	MIN. SPACING	MANUFACTURER
TAPCONS	1/4"	1 1/4"	CONCRETE BLOCK	2 1/2"	3" O.C.	ITW/BUILDEX, INC.
TAPCONS	1/4"	1 3/4"	POURED CONCRETE (f'c=3192 psi)	2 1/2"	3" O.C.	ITW/BUILDEX, INC.
KWIK-BOLT TZ	1/2"	3 1/4"	POURED CONCRETE (f'c=2500 psi)	6"	9 3/4" O.C.	HILTI, INC.

(A) ANCHORS SHALL BE INSTALLED FOLLOWING ALL OF THE RECOMMENDATIONS AND SPECIFICATIONS OF THE ANCHOR'S MANUFACTURER.
(B) EMBEDMENT AND EDGE DISTANCE ARE BEYOND ANY FINISH.

7. THIS LOUVER SHALL BE ONLY INSTALLED IN A LOCATION WHERE THE ROOM BEHIND THE LOUVER IS DESIGNED TO DRAIN WATER PENETRATING INTO THE ROOM, AND THE ROOM WILL HOUSE WATER RESISTENT/WATER PROOF EQUIPMENT, COMPONENTS OR SUPPLIES.

8. IT SHALL BE RESPONSIBILITY OF THE CONTRACTOR TO VERIFY THE SOUNDNESS OF THE STRUCTURE WHERE LOUVER SYSTEM IS TO BE ATTACHED TO INSURE PROPER ANCHORAGE.

9. (A) THIS PRODUCT APPROVAL DOCUMENT (P.A.D.) PREPARED BY THIS ENGINEER IS GENERIC AND DOES NOT PROVIDE INFORMATION FOR A SITE SPECIFIC PROJECT; i.e. WHERE THE SITE CONDITIONS DEVIATE FROM THE P.A.D.

(B) CONTRACTOR TO BE RESPONSIBLE FOR THE SELECTION, PURCHASE AND INSTALLATION INCLUDING LIFE SAFETY OF THIS PRODUCT BASED ON THIS PRODUCT APPROVAL PROVIDED HE/SHE DOES NOT DEVIATE FROM THE CONDITIONS DETAILED ON THIS DOCUMENT. CONSTRUCTION SAFETY AT SITE IS THE CONTRACTOR'S RESPONSIBILITY.

(c) THIS P.A.D. WILL BE CONSIDERED INVALID IF ALTERED BY ANY MEANS.

(d) SITE SPECIFIC PROJECTS SHALL BE PREPARED BY A FLORIDA REGISTERED ENGINEER OR ARCHITECT WHICH WILL BECOME THE ENGINEER OF RECORD (E.O.R.) FOR THE PROJECT AND WHO WILL BE RESPONSIBLE FOR THE PROPER USE OF THE P.A.D. ENGINEER OF RECORD, ACTING AS DELEGATED ENGINEER TO THE P.A.D. ENGINEER, SHALL SUBMIT TO THIS LATTER THE SITE SPECIFIC DRAWINGS FOR REVIEW.

(e) ORIGINAL P.A.D. SHALL BEAR THE DATE AND ORIGINAL SEAL AND SIGNATURE OF THE PROFESSIONAL ENGINEER OF RECORD THAT PREPARED IT.

10. LOUVER'S MANUFACTURER LABEL SHALL BE PLACED ON A READILY VISIBLE LOCATION.
ONE LABEL SHALL BE PLACED FOR EVERY UNIT. LABEL SHALL READ AS FOLLOWS:

ALUFAB, INC..
OPA LOCKA, FL.
MIAMI-DADE COUNTY PRODUCT CONTROL APPROVED.

PRODUCT REVISED
as complying with the Florida Building Code
Acceptance No 08-0911.03
Expiration Date 12/28/2013
By
Miami-Dade Product Control Division

F.B.C.(H.V.H.Z.) / MIAMI-DADE COUNTY

P.E. SEAL/SIGNATURE/DATE

© 2008 TILTECO INC.

TILTECO INC.
TILLIT TESTING & ENGINEERING COMPANY
6355 N.W. 36th. St., Ste. 305, VIRGINIA GARDENS, Fl. 33166
Phone : (305)871-1530 . Fax : (305)871-1531
EB-0006719
WALTER A. TILLIT Jr. P.E.
FLORIDA Lic. # 44167

ALUMINUM LOUVER SYSTEM

ALUFAB, INC.
13000 NW 38 th AVENUE
OPA LOCKA, FL 33054
PHONE: (305) 681-4701 FAX: (305) 681-4804

REV. No	DESCRIPTION	DATE	REV. No	DESCRIPTION	DATE
1	OLD 02-522	08/13/08	3	–	–
2	–	–	4	–	–

DRAWN BY: M.C.V.
08/13/08 DATE
08-204 DRAWING No
SHEET 1 OF 5

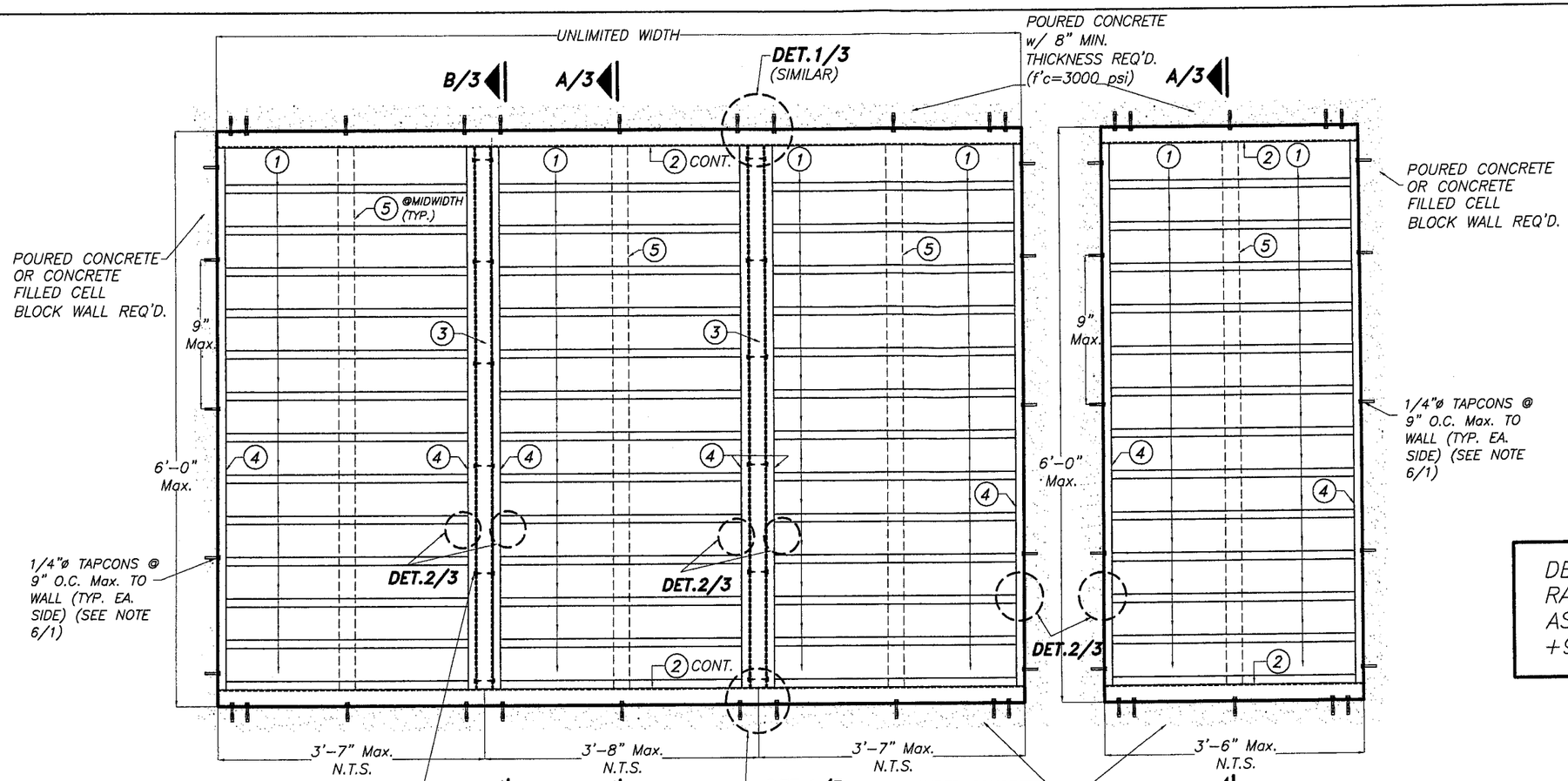

DESIGN PRESSURE RATING FOR THESE ASSEMBLIES IS: +98.5, −197.0 PSF.

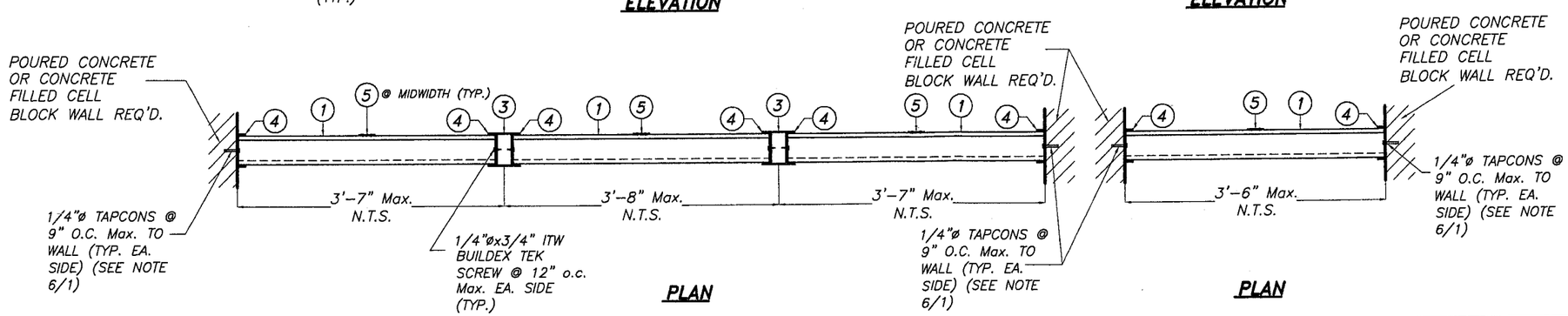

PRODUCT REVISED
in complying with the Florida Building Code
Acceptance No 08-0711.03
Expiration Date 12/28/2013
By _____
Miami Dade Product Control Division

F.B.C.(H.V.H.Z.) / MIAMI-DADE COUNTY

MULTIPLE & SINGLE UNITS ASSEMBLY CASE 1

SCALE: 3/4"= 1'-0"

8/21/08
P.E. SEAL/SIGNATURE/DATE

© 2008 TILTECO INC.

TILTECO INC.
TILLIT TESTING & ENGINEERING COMPANY
6355 N.W. 36th. St., Ste. 305, VIRGINIA GARDENS, FL 33166
Phone : (305)871-1530 . Fax : (305)871-1531
EB-0006719
WALTER A. TILLIT Jr. P.E.
FLORIDA Lic. # 44167

ALUMINUM LOUVER SYSTEM

ALUFAB, INC.
13000 NW 38 th AVENUE
OPA LOCKA, FL 33054
PHONE: (305) 681-4701 FAX: (305) 681-4604

REV. No	DESCRIPTION	DATE	REV. No	DESCRIPTION	DATE
1	OLD 02-522	08/13/08	3	–	–
2	–	–	4	–	–

DRAWN BY: M.C.V.
08/13/08 DATE
08-204 DRAWING No
SHEET 2 OF 5

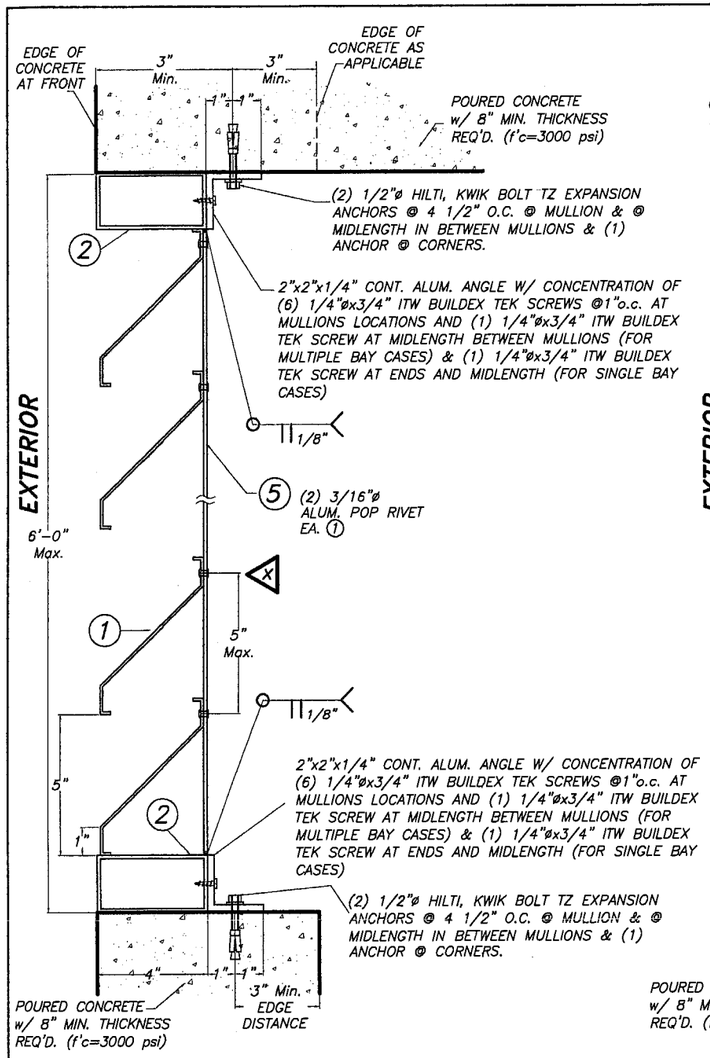

SECTION A–A

SCALE: 3/16"= 1"

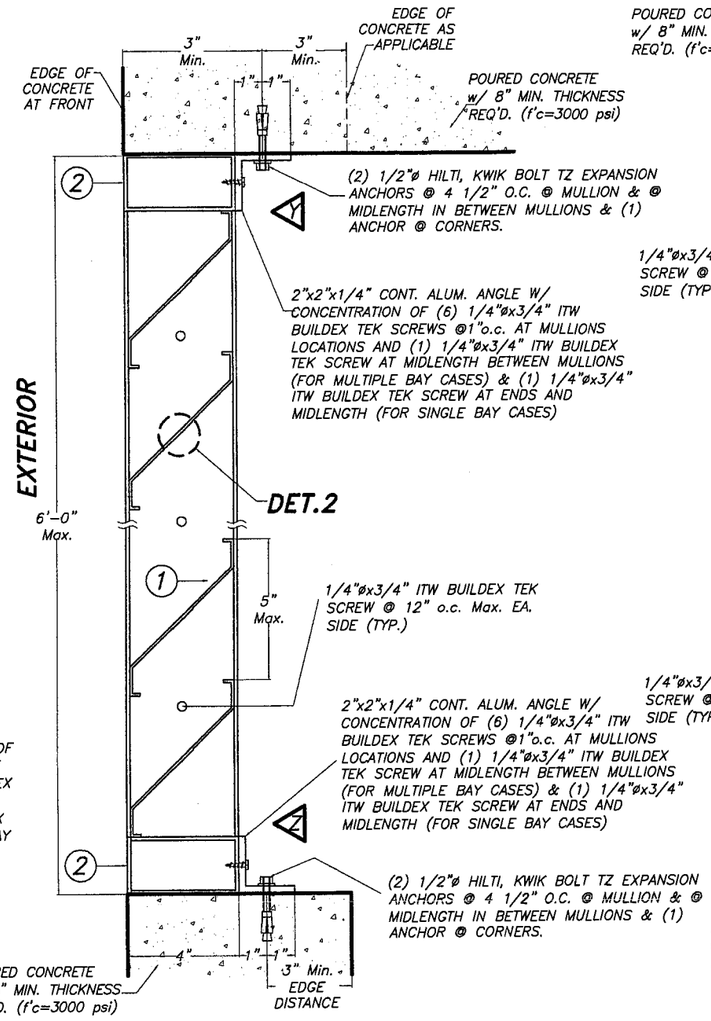

SECTION B–B

SCALE: 3/16"= 1"

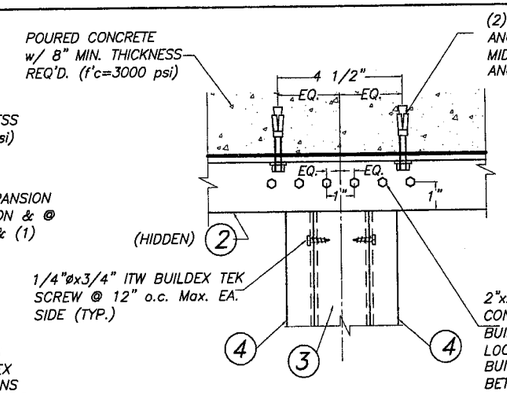

AT INTERIOR MULLIONS
(MULTIPLE BAY CASES)

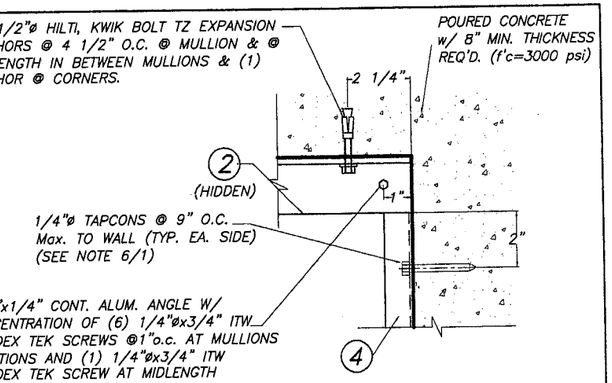

AT CORNERS
(SINGLE AND MULTIPLE BAY CASES)

ELEVATIONS A

SCALE: 3/16"= 1"

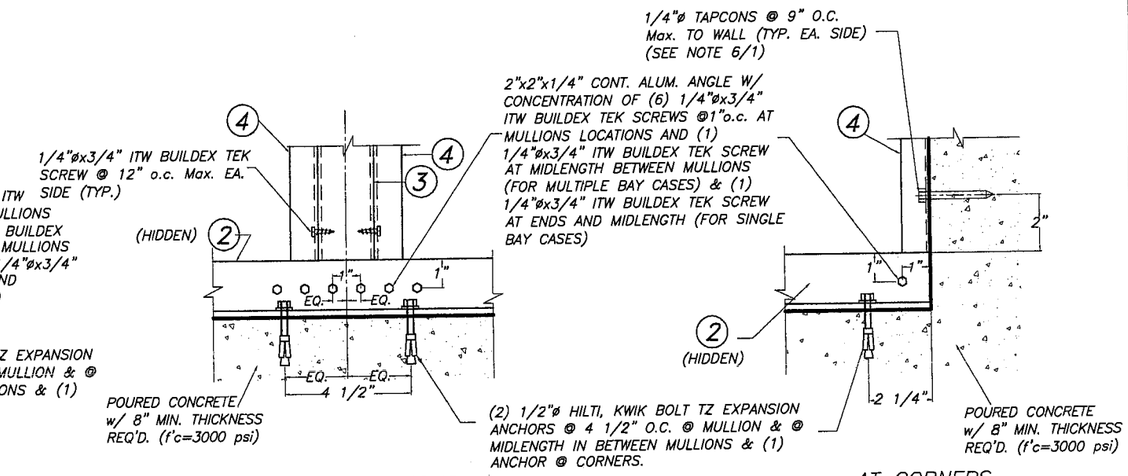

AT INTERIOR MULLIONS
(MULTIPLE BAY CASES)

AT CORNERS
(SINGLE AND MULTIPLE BAY CASES)

ELEVATIONS B

SCALE: 3/16"= 1"

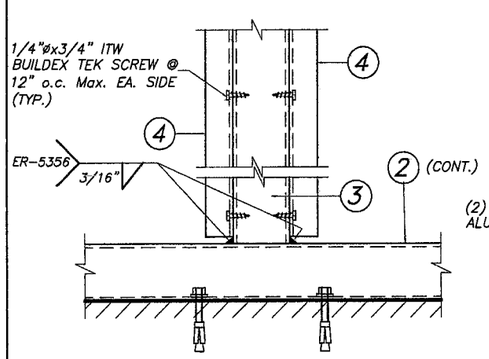

DETAIL 1

SCALE: 3/16"= 1"

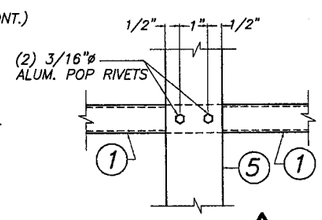

ELEVATION X

SCALE: 3/16"= 1"

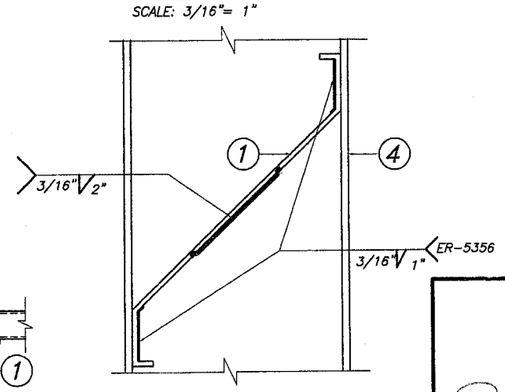

DETAIL 2

SCALE: 3/32"= 1"

PRODUCT REVISED
as complying with the Florida Building Code
Acceptance No 08-0911.03
Expiration Date 12/28/2013
By _____
Miami Dade Product Control Division

F.B.C.(H.V.H.Z.) / MIAMI–DADE COUNTY

8/21/08
P.E. SEAL/SIGNATURE/DATE

© 2008 TILTECO INC.

TILTECO INC.
TILLIT TESTING & ENGINEERING COMPANY
6355 N.W. 36th. St., Ste. 305, VIRGINIA GARDENS, FL 33166
Phone : (305)871-1530 , Fax : (305)871-1531
EB-0006719
WALTER A. TILLIT Jr. P.E.
FLORIDA Lic. # 44167

ALUMINUM LOUVER SYSTEM

ALUFAB, INC.
13000 NW 38 th AVENUE
OPA LOCKA, FL 33054
PHONE: (305) 681-4701 FAX: (305) 681-4604

REV. No	DESCRIPTION	DATE	REV. No	DESCRIPTION	DATE
1	OLD 02-522	08/13/08	3	–	–
2	–	–	4	–	–

DRAWN BY: M.C.V.
08/13/08 DATE
08-204 DRAWING No
SHEET 3 OF 5

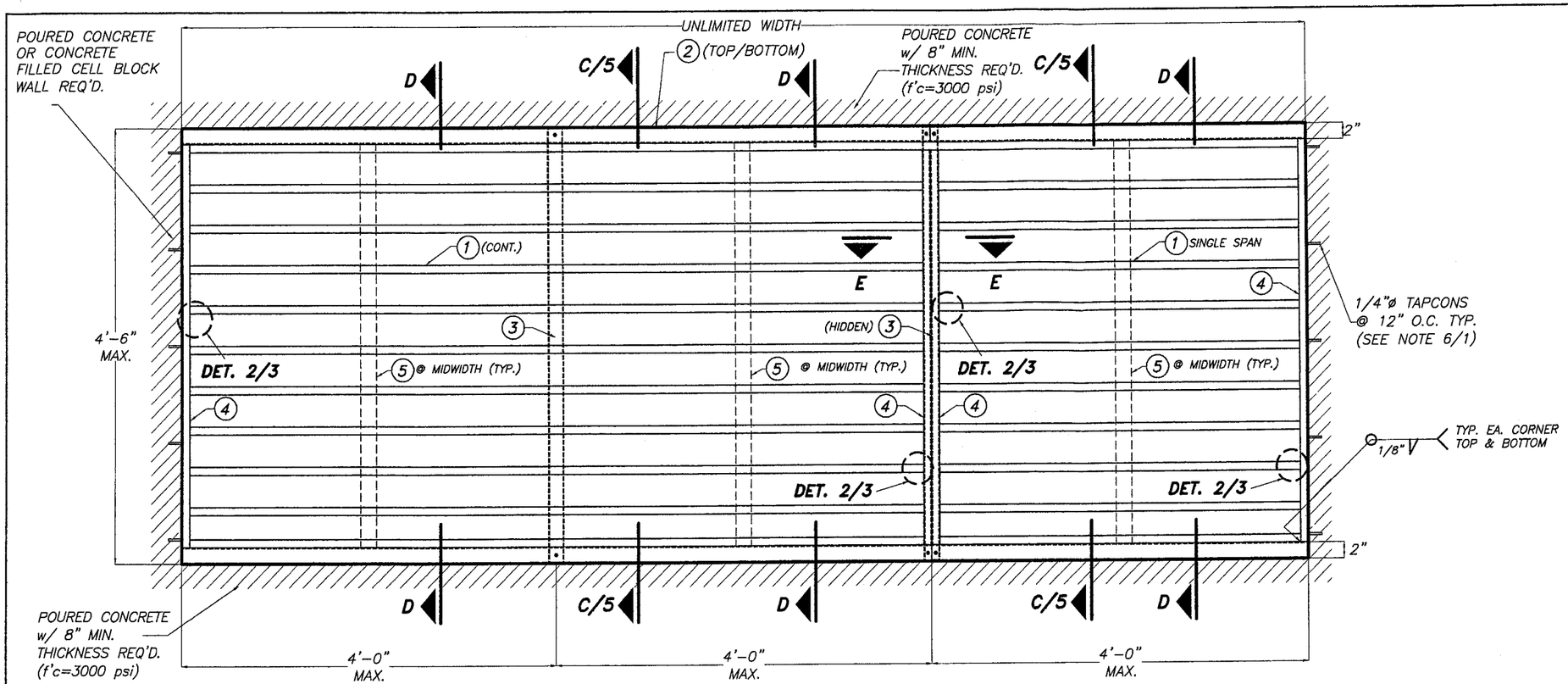

ELEVATION

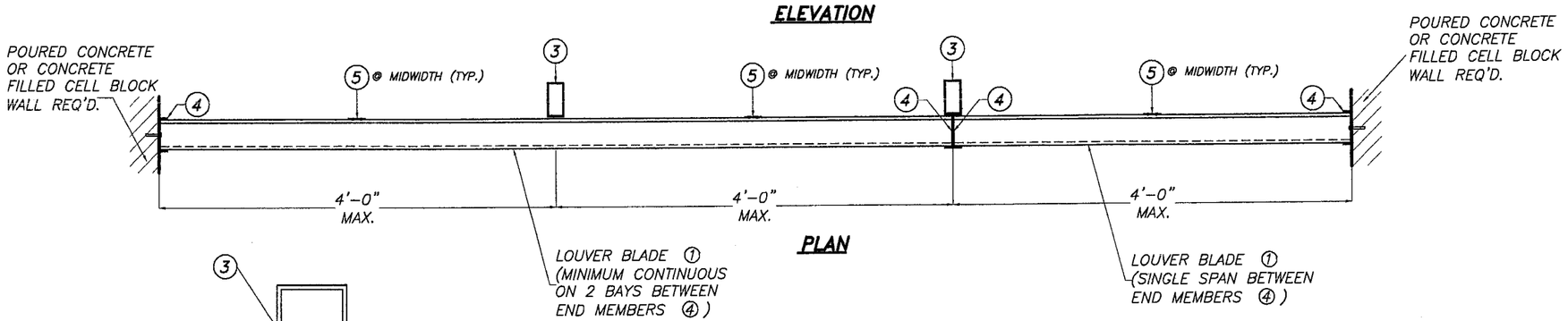

PLAN

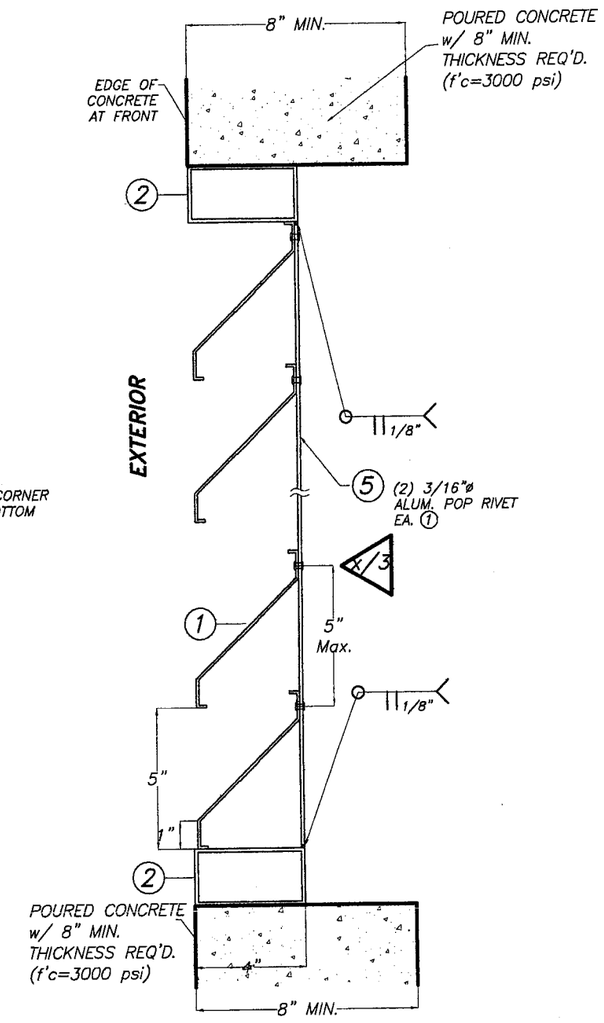

SECTION D-D

SCALE: 3/16"= 1"

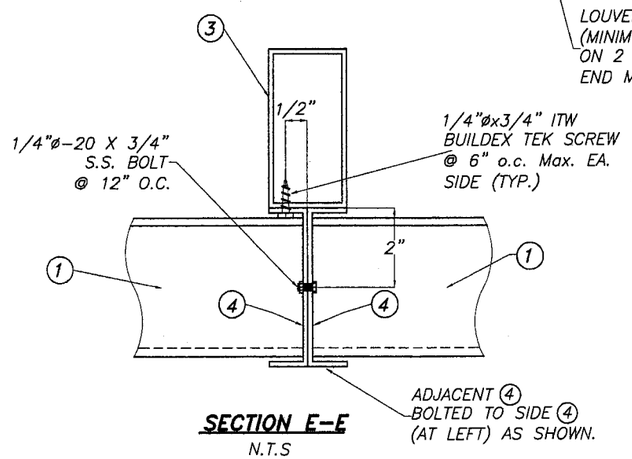

SECTION E-E

N.T.S

MULTIPLE & SINGLE UNITS ASSEMBLY CASE 2

SCALE: 3/4"=1'-0"

DESIGN PRESSURE RATING FOR THIS ASSEMBLY IS: +96.8, -96.8 PSF.

PRODUCT REVISED
as complying with the Florida Building Code
Acceptance No 08-0911.03
Expiration Date 12/28/2013
By
Miami Dade Product Control Division

F.B.C.(H.V.H.Z.) / MIAMI-DADE COUNTY

8/21/08
P.E. SEAL/SIGNATURE/DATE

© 2008 TILTECO INC.

TILTECO INC.
TILLIT TESTING & ENGINEERING COMPANY
6355 N.W. 36th. St., Ste. 305, VIRGINIA GARDENS, FL 33166
Phone : (305)871-1530 . Fax : (305)871-1531
EB-0006719
WALTER A. TILLIT Jr. P.E.
FLORIDA Lic. # 44167

ALUMINUM LOUVER SYSTEM

ALUFAB, INC.

13000 NW 38 th AVENUE
OPA LOCKA, FL 33054
PHONE: (305) 681-4701 FAX: (305) 681-4604

REV. No	DESCRIPTION	DATE	REV. No	DESCRIPTION	DATE
1	OLD 02-522	08/13/08	3	–	–
2	–	–	4	–	–

DRAWN BY: M.C.V.
08/13/08 DATE
08-204 DRAWING No
SHEET 4 OF 5

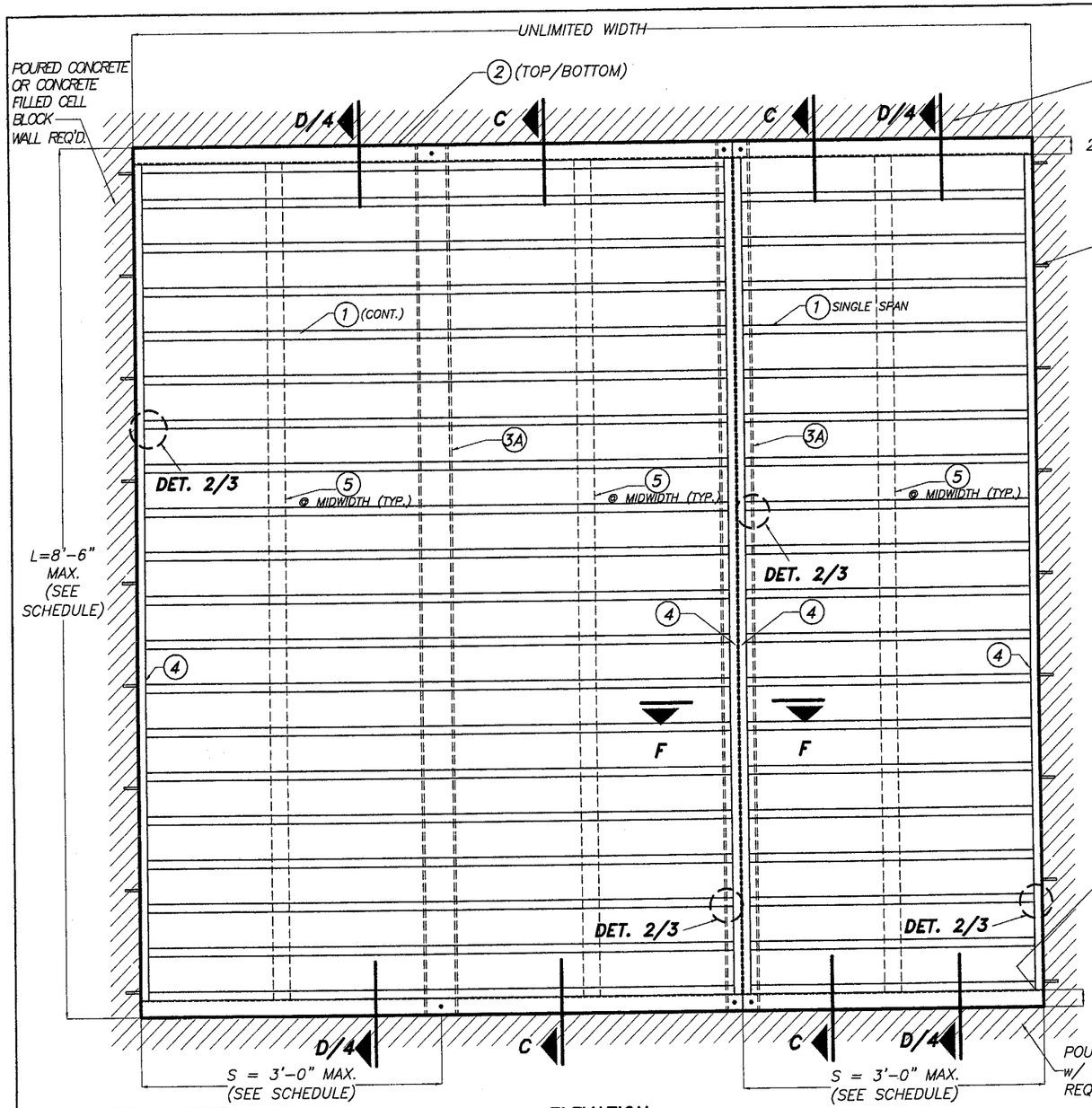

ELEVATION

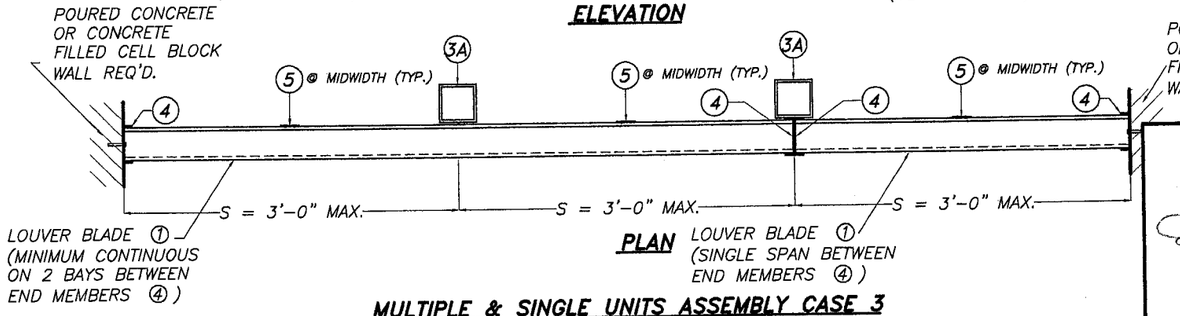

PLAN

MULTIPLE & SINGLE UNITS ASSEMBLY CASE 3

SCALE: 3/4"=1'-0"

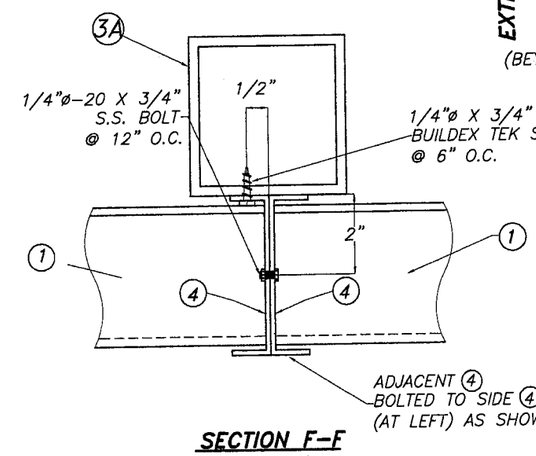

SECTION F-F

N.T.S

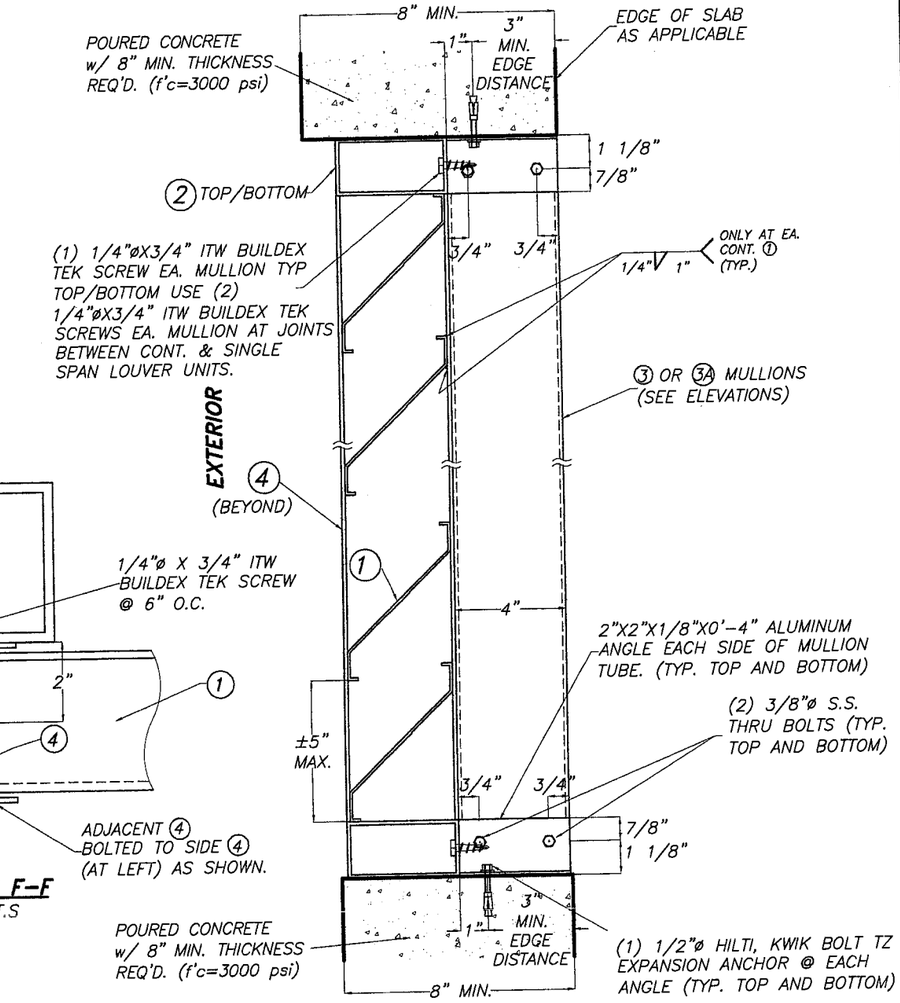

TYPICAL SECTION C-C

SCALE: 3/16" = 1'

DESIGN PRESSURE RATING (W) psf. AND MAXIMUM HEIGHT (L) ft., FOR THIS ASSEMBLY IS:

W (psf)		S (in.)	
		30"	36"
+98.5	-170.0	8'-6"	8'-0"
+98.5	-180.0	8'-4"	7'-10"
+98.5	-190.0	8'-2"	7'-8"
+98.5	-197.0	8'-1"	7'-7"

PRODUCT REVISED
as complying with the Florida Building Code
Acceptance No 08-0911.03
Expiration Date 12/29/2013
By
Miami Dade Product Control Division

F.B.C.(H.V.H.Z.) / MIAMI-DADE COUNTY

8/21/08
P.E. SEAL/SIGNATURE/DATE

© 2008 TILTECO INC.

TILTECO INC.
TILLIT TESTING & ENGINEERING COMPANY
6355 N.W. 36th. St., Ste. 305, VIRGINIA GARDENS, FL. 33166
Phone : (305)871-1530 . Fax : (305)871-1531
EB-0006719
WALTER A. TILLIT Jr. P.E.
FLORIDA Lic. # 44167

ALUMINUM LOUVER SYSTEM

ALUFAB, INC.
13000 NW 38 th AVENUE
OPA LOCKA, FL 33054
PHONE: (305) 681-4701 FAX: (305) 681-4804

REV. No	DESCRIPTION	DATE	REV. No	DESCRIPTION	DATE
1	OLD 02-522	08/13/08	3	-	-
2	-	-	4	-	-

DRAWN BY: M.C.V.
08/13/08 DATE
08-204 DRAWING No
SHEET 5 OF 5