MIAMI-DADE COUNTY

BUILDING CODE COMPLIANCE OFFICE (BCCO)
PRODUCT CONTROL DIVISION

MIAMI–DADE COUNTY, FLORIDA
METRO–DADE FLAGLER BUILDING
140 WEST FLAGLER STREET, SUITE 1107
MIAMI, FLORIDA 33130–1563
(305) 375–2902 FAX (305) 372–6339
www.miamidade.gov/buildingcode

NOTICE OF ACCEPTANCE (NOA)

Weiland Sliding Doors and Windows, Inc.
2601 Industry Street
Oceanside, CA 92054

SCOPE:

This NOA is being issued under the applicable rules and regulations governing the use of construction materials. The documentation submitted has been reviewed by Miami–Dade County Product Control Division and accepted by the Board of Rules and Appeals (BORA) to be used in Miami–Dade County and other areas where allowed by the Authority Having Jurisdiction (AHJ).

This NOA shall not be valid after the expiration date stated below. The Miami–Dade County Product Control Division (In Miami–Dade County) and/or the AHJ (in areas other than Miami–Dade County) reserve the right to have this product or material tested for quality assurance purposes. If this product or material fails to perform in the accepted manner, the manufacturer will incur the expense of such testing and the AHJ may immediately revoke, modify, or suspend the use of such product or material within their jurisdiction. BORA reserves the right to revoke this acceptance, if it is determined by Miami–Dade County Product Control Division that this product or material fails to meet the requirements of the applicable building code.

This product is approved as described herein, and has been designed to comply with the Florida Building Code, including the High Velocity Hurricane Zone.

DESCRIPTION:

Series "Lift & Slide AWLS" 10'0" W/E Wood Clad Aluminum Sliding Glass Door – L.M.I.

APPROVAL DOCUMENT: Drawing No. **WSD001**, titled "Series Aluminum Wood Liftslide (AWLS) Sliding Glass Door", sheets 1 through 11 of 11, dated 07/22/08 with revision **"C"** dated 10/23/09, prepared by CertWorks, LLC, signed and sealed by Kristina S. Daugherty, P. E., bearing the Miami–Dade County Product Control Renewal stamp with the Notice of Acceptance number and expiration date by the Miami–Dade County Product Control Division.

MISSILE IMPACT RATING: Large and Small Missile Impact Resistant

LABELING: Each unit shall bear a permanent label with the manufacturer's name or logo, city, state and following statement: "Miami–Dade County Product Control Approved", unless otherwise noted herein.

REVISION of this NOA shall be considered after a renewal application has been filed and there has been no change in the applicable building code negatively affecting the performance of this product.

TERMINATION of this NOA will occur after the expiration date or if there has been a revision or change in the materials, use, and/or manufacture of the product or process. Misuse of this NOA as an endorsement of any product, for sales, advertising or any other purposes shall automatically terminate this NOA. Failure to comply with any section of this NOA shall be cause for termination and removal of NOA.

ADVERTISEMENT: The NOA number preceded by the words Miami–Dade County, Florida, and followed by the expiration date may be displayed in advertising literature. If any portion of the NOA is displayed, then it shall be done in its entirety.

INSPECTION: A copy of this entire NOA shall be provided to the user by the manufacturer or its distributors and shall be available for inspection at the job site at the request of the Building Official.

This NOA consists of this page 1 and evidence pages E–1 and E–2, as well as approval document mentioned above.

The submitted documentation was reviewed by **Jaime D. Gascon, P. E.**

MIAMI-DADE COUNTY APPROVED

J. Gascon
10/29/09

Weiland Sliding Doors and Windows, Inc.

NOTICE OF ACCEPTANCE: EVIDENCE SUBMITTED

A. DRAWINGS

1. Manufacturer's die drawings and sections.
2. Drawing No **WSD001**, titled "Series Aluminum Wood Liftslide (AWLS) Sliding Glass Door", sheets 1 through 11 of 11, dated 07/22/08 with revision "**C**" dated 10/23/09, prepared by CertWorks, LLC, signed and sealed by Kristina S. Daugherty, P. E.

B. TESTS

1. Test reports on: 1) Air Infiltration Test, per FBC, TAS 202–94
   2) Uniform Static Air Pressure Test, Loading per FBC TAS 202–94
   3) Water Resistance Test, per FBC, TAS 202–94
   4) Large Missile Impact Test per FBC, TAS 201–94
   5) Cyclic Wind Pressure Loading per FBC, TAS 203–94
   6) Forced Entry Test, per FBC 2411 3.2.1, TAS 202–94

   along with marked–up drawings and installation diagram of wood clad aluminum lift and slide door, prepared by Architectural Testing, Inc., Test Report No. **ATI 81047.01–301–18**, dated June 18, 2008, signed and sealed by Jeffery T. Kaminski, P. E.

C. CALCULATIONS

1. Anchor verification calculations and structural analysis, complying with FBC–2007, prepared by CertWorks, LLC, dated 08/22/08, signed, sealed and dated 09/15/09 by Kristina S. Daugherty, P. E.
   Complies with ASTM E1300–02/ 04

D. QUALITY ASSURANCE

1. Miami–Dade Building Code Compliance Office (BCCO).

E. MATERIAL CERTIFICATIONS

1. Notice of Acceptance No. **09-0312.03** issued to E.I. DuPont DeNemours & Co., Inc. for their "**DuPont Sentry Glass® Interlayer**" dated 05/13/09, expiring on 01/14/12.
2. Notice of Acceptance No. **06-0216.06** issued to Solutia Inc. for their "**Saflex IIIG Clear or colored interlayer**" dated 05/04/06, expiring on 05/21/11.
3. Donnelly Bros., Inc. Part No. **Nylon 6, Carbon Fiber Filled** EPDM exterior glazing gasket complying with ASTM C864 Option II exceptions, 11600 PSI with ASTM D412, 130°F with D395B, Durometer 114, Flammability HB–V–0 with UL 94.

Jaime D. Gascon P. E.
Chief, Product Control Division
NOA No. 08–0915.03
Expiration Date: November 18, 2014
Approval Date: November 18, 2009

E. MATERIAL CERTIFICATIONS (CONTINUED)

4. Donnelly Bros., Inc. Part No. **Nylon 66, Impact Grade** EPDM exterior glazing gasket complying with ASTM C864 Option II exceptions, 3770 PSI with ASTM D412, 130°F with D395B, Durometer 69, Flammability HB–V–0 with UL 94.
5. Glazelock Shims Part No. **Huntsman PS 333** structural load bearing shim complying with ASTM D 695, 3320 PSI with ASTM D412, 203°F with D395B, Durometer 42.1.
6. Proni Group Part No. **Z/P 66G30R series 600** structural load bearing shim complying with ASTM D 695, 1087 PSI with ASTM D412, 158°F with D395B, Durometer 120.

F. STATEMENTS

1. Statement letter of change, dated April 02, 2009, signed and sealed by Kristina S. Daugherty, P. E.
2. Statement letter of conformance and no financial interest, dated April 02, 2009, signed and sealed by Kristina S. Daugherty, P.E.
3. Laboratory compliance letter for Test Report No. **ATI 81047.01–301–18**, issued by Architectural Testing, Inc., dated June 19, 2008, signed and sealed by Jeffery T. Kaminski, P. E.
4. Laboratory addendum letter for Test Report No. **ATI 81047.01–301–18**, issued by Architectural Testing, Inc., dated May 07, 2009, signed and sealed by Joshua M. Royce, P. E.

G. OTHERS

1. None.

Jaime D. Gascon P. E.
Chief, Product Control Division
NOA No. 08–0915.03
Expiration Date: November 18, 2014
Approval Date: November 18, 2009

WEILAND SLIDING DOORS AND WINDOWS, INC.

ALUMINUM WOOD LIFTSLIDE (AWLS) SLIDING GLASS DOOR

INSTALLATION NOTES:

1. THE NUMBER OF INSTALLATION ANCHORS DEPICTED IS THE MINIMUM NUMBER OF ANCHORS TO BE USED FOR PRODUCT INSTALLATION.
2. INSTALL INSTALLATION ANCHORS AT ALL JACKING SCREW LOCATIONS (SEE SILL INSTALLATION).
3. MINIMUM EMBEDMENT AND EDGE DISTANCE EXCLUDE WALL FINISHES, INCLUDING BUT NOT LIMITED TO STUCCO, FOAM, BRICK VENEER, AND SIDING.
4. INSTALLATION ANCHORS AND ASSOCIATED HARDWARE MUST BE MADE OF CORROSION RESISTANT MATERIAL OR HAVE A CORROSION RESISTANT COATING.
5. FOR HOLLOW BLOCK AND GROUT FILLED BLOCK, DO NOT INSTALL INSTALLATION ANCHORS INTO MORTAR JOINTS. EDGE DISTANCE IS MEASURED FROM FREE EDGE OF BLOCK OR EDGE OF MORTAR JOINT INTO FACE SHELL OF BLOCK.
6. INSTALLATION ANCHORS SHALL BE INSTALLED IN ACCORDANCE WITH ANCHOR MANUFACTURER'S INSTALLATION INSTRUCTIONS, AND ANCHORS SHALL NOT BE USED IN SUBSTRATES WITH STRENGTHS LESS THAN THE MINIMUM STRENGTH SPECIFIED BY THE ANCHOR MANUFACTURER.
7. INSTALLATION ANCHOR CAPACITIES FOR PRODUCTS HEREIN ARE BASED ON SUBSTRATE MATERIALS WITH THE FOLLOWING PROPERTIES:
   A. WOOD - MINIMUM SPECIFIC GRAVITY OF 0.55.
   B. CONCRETE -MINIMUM COMPRESSIVE STRENGTH OF 2700 PSI.
   C. MASONRY - STRENGTH CONFORMANCE TO ASTM C-90, GRADE N, TYPE 1 (OR GREATER).

GENERAL NOTES:

1. THE PRODUCT SHOWN HEREIN IS DESIGNED AND MANUFACTURED TO COMPLY WITH THE 2007 FLORIDA BUILDING CODE, INCLUDING HVHZ.
   - TAS 201-94
   - TAS 202-94
   - TAS 203-94
2. ADEQUACY OF THE EXISTING STRUCTURAL CONCRETE/MASONRY AND 2X FRAMING AS A MAIN WIND FORCE RESISTING SYSTEM CAPABLE OF WITHSTANDING AND TRANSFERRING APPLIED PRODUCT LOADS TO THE FOUNDATION IS THE RESPONSIBILITY OF THE ENGINEER OR ARCHITECT OF RECORD FOR THE PROJECT OF INSTALLATION.
3. 1X AND 2X BUCKS (WHEN USED) SHALL BE DESIGNED AND ANCHORED TO PROPERLY TRANSFER ALL LOADS TO THE STRUCTURE. BUCK DESIGN AND INSTALLATION IS THE RESPONSIBILITY OF THE ENGINEER OR ARCHITECT OF RECORD FOR THE PROJECT OF INSTALLATION.
4. THE INSTALLATION DETAILS DESCRIBED HEREIN ARE GENERIC AND MAY NOT REFLECT ACTUAL CONDITIONS FOR A SPECIFIC SITE. IF SITE CONDITIONS CAUSE INSTALLATION TO DEVIATE FROM THE REQUIREMENTS DETAILED HEREIN, A LICENSED ENGINEER OR ARCHITECT SHALL PREPARE SITE SPECIFIC DOCUMENTS FOR USE WITH THIS DOCUMENT, IN NON HVHZ AND TO BE REVIEWED BY BUILDING OFFICIAL. FOR HVHZ DEVIATION FROM NOA REQUIRES ONE TIME APPROVAL FROM MIAMI-DADE COUNTY (BCCO).
5. APPROVED IMPACT PROTECTIVE SYSTEM **IS NOT REQUIRED** ON THIS PRODUCT IN AREAS REQUIRING IMPACT RESISTANCE.
6. DOOR FRAME MATERIAL: ALUMINUM 6063-T5.
7. GLASS MEETS THE REQUIREMENTS OF ASTM E1300 GLASS CHARTS. SEE SHEET 6 FOR GLAZING DETAIL.
8. DESIGNATIONS "X" AND "O" STAND FOR THE FOLLOWING:
   X: OPERABLE PANEL
   O: FIXED PANEL
   P: POCKET
9. APPROVED CONFIGURATIONS:
   2 TRACK - PXX-XXP, OX-XXP, PXX-XO, PX, XP, PXX, XXP, PX-XP, OX-XO, OX, XO, XXO, OXX
   3 TRACK - PXXX, XXXP, XXXO, OXXX
   4 TRACK - PXXXX, XXXXP

TABLE OF CONTENTS

SHEET	REVISION	SHEET DESCRIPTION
1	C	INSTALLATION & GENERAL NOTES
2	B	APPROVED CONFIGURATIONS
3	B	ELEVATIONS
4	B	ANCHOR LAYOUTS
5	C	VERTICAL SECTIONS
6	C	HORIZONTAL SECTIONS
7	C	HORIZONTAL SECTIONS & GLAZING DETAILS
8	B	EXPLODED VIEW & CORNER ASSEMBLY
9	C	DRAINAGE DETAILS
10	B	COMPONENTS & B.O.M.
11	B	COMPONENTS

DESIGN PRESSURE RATING

GLAZE TYPE	DESIGN PRESSURE	MISSILE IMPACT RATING
1-3	+/- 40.0 PSF	SMALL AND LARGE MISSILE IMPACT RATED

Approved as complying with the Florida Building Code
Date NOVEMBER 18, 2009
NOA# 08-0918.03
Miami Dade Product Control Division
By

weiland
Sliding Doors and Windows, Inc.
2601 INDUSTRY STREET
OCEANSIDE, CA 92054
PH: (760) 722.8828 FX: (760) 722.8838

TITLE: LIFT AND SLIDE DOOR INSTALLATION & GENERAL NOTES

PREPARED BY:
CERTWORKS, LLC
127 W. FAIRBANKS AVE., STE. 438
WINTER PARK, FL 32789
PH: (407) 644-6957 FX: (407) 644-2366

REVISIONS

NO.	DESCRIPTION	BY	DATE
A	UPDATED TABLE OF CONTENTS	JLR	05.05.09
B	UPDATED TABLE OF CONTENTS	JLR	09.14.09
C	UPDATED TABLE OF CONTENTS	JLR	10.23.09

10-26-09
KRISTINA S. DAUGHERTY
FLORIDA P. E. NO. 62455
127 W. FAIRBANKS AVE. STE. 438
WINTER PARK, FL 32789
FBPE CERT. OF AUTHORIZATION NO. 26520

DATE: 07.22.08
DWN BY: GT
CHK BY: CH
SCALE: NTS
DWG #: WSD001
SHEET: 1 OF 11

p:\projects\weiland sliding doors\p-0807-01 (m-d - lift and slide)\dwgs\wsd001 aluminum wood liftslide (awls)1.dwg 10/23/2009 2:42 PM

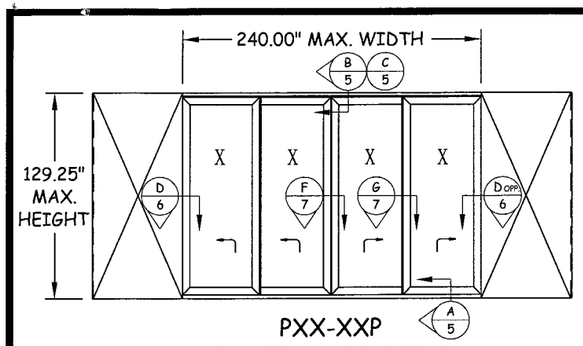

PXX-XXP
(POCKETING DOORS)
2 TRACK

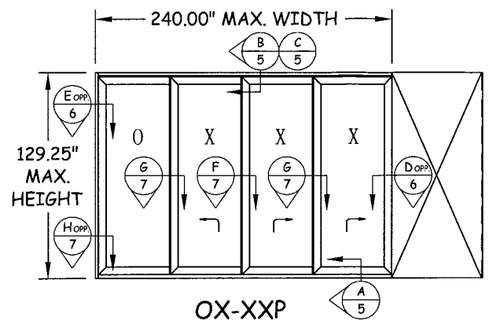

OX-XXP
(POCKETING DOORS)
2 TRACK

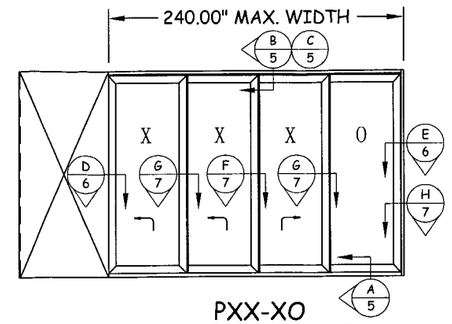

PXX-XO
(POCKETING DOORS)
2 TRACK

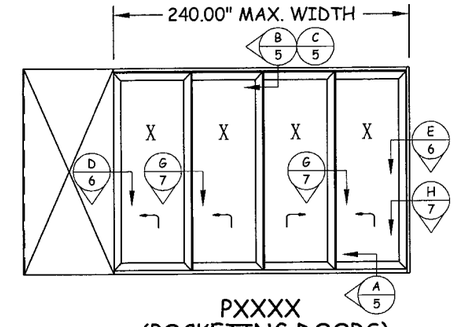

PXXXX
(POCKETING DOORS)
4 TRACK

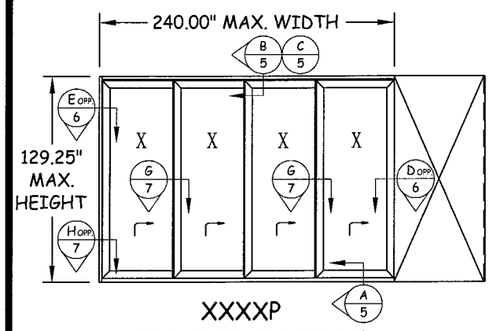

XXXXP
(POCKETING DOORS)
4 TRACK

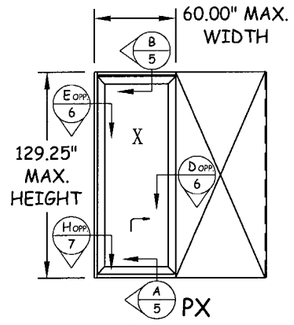

PX
(POCKETING DOOR)
2 TRACK

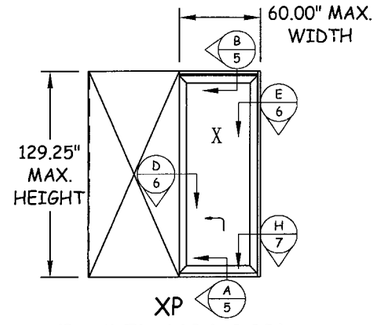

XP
(POCKETING DOOR)
2 TRACK

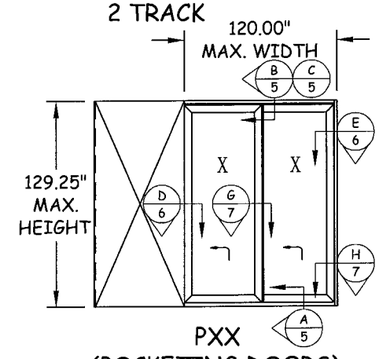

PXX
(POCKETING DOORS)
2 TRACK

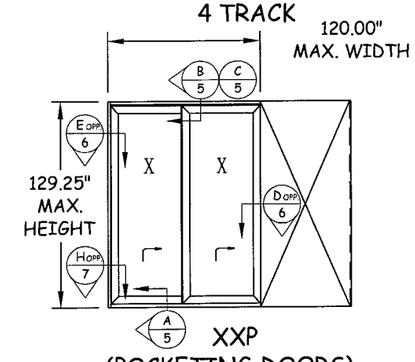

XXP
(POCKETING DOORS)
2 TRACK

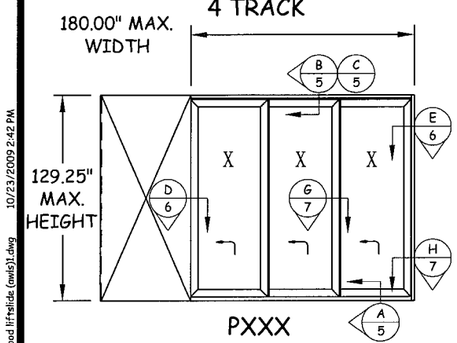

PXXX
(POCKETING DOORS)
3 TRACK

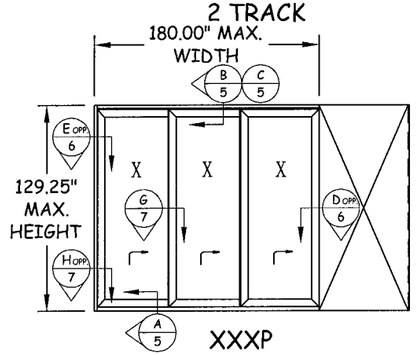

XXXP
(POCKETING DOORS)
3 TRACK

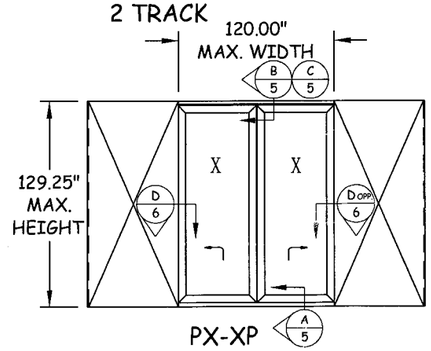

PX-XP
(POCKETING DOORS)
2 TRACK

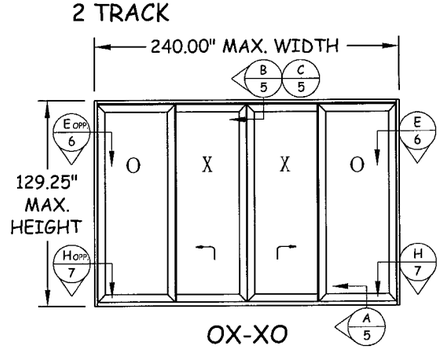

OX-XO
(NON-POCKETING DOORS)
2 TRACK

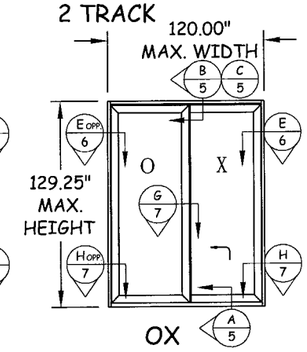

OX
(NON-POCKETING DOORS)
2 TRACK

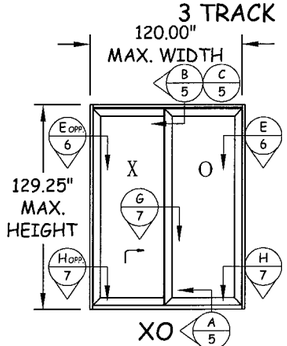

XO
(NON-POCKETING DOORS)
2 TRACK

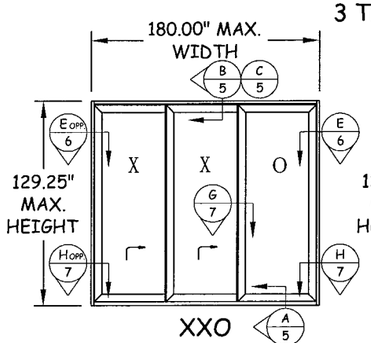

XXO
(NON-POCKETING DOORS)
2 TRACK

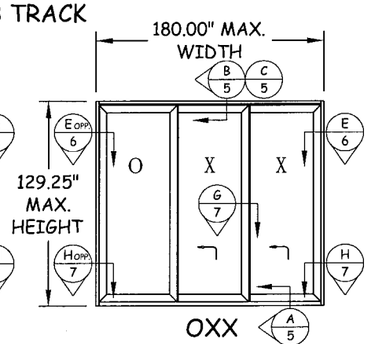

OXX
(NON-POCKETING DOORS)
2 TRACK

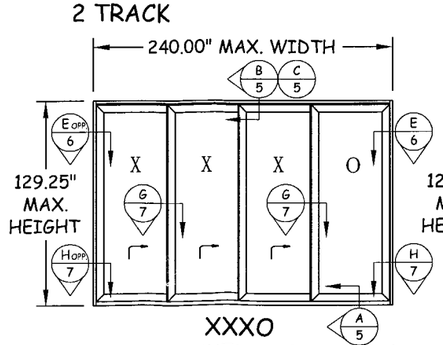

XXXO
(NON-POCKETING DOORS)
3 TRACK

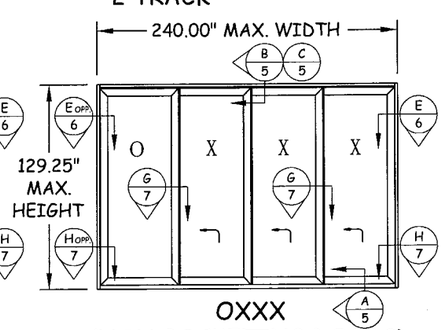

OXXX
(NON-POCKETING DOORS)
3 TRACK

Approved as complying with the Florida Building Code
Date NOVEMBER 18, 2009
NOA# 08-0915.03
Miami Dade Product Control Division
By

weiland
Sliding Doors and Windows, Inc.
2601 INDUSTRY STREET
OCEANSIDE, CA 92054
PH: (760) 722.8828 FX: (760) 722.8838

TITLE: LIFT AND SLIDE DOOR APPROVED CONFIGURATIONS

PREPARED BY:
CERTWORKS, LLC
127 W. FAIRBANKS AVE., STE. 438
WINTER PARK, FL 32789
PH: (407) 644-6957 FX: (407) 644-2366

REVISIONS

NO.	DESCRIPTION	BY	DATE
B	ADDED SHEET TO SET	JLR	09.14.09

10-26-09

KRISTINA S. DAUGHERTY
FLORIDA P. E. NO. 68455
127 W. FAIRBANKS AVE. STE 438
WINTER PARK, FL 32789
FBPE CERT. OF AUTHORIZATION NO. 28520

DATE:	DWN BY:	CHK BY:	SCALE:
07/22/08	GT	CH	NTS

DWG #: WSD001

SHEET: 2 OF 11

p:\projects\weiland sliding doors\p-0807-01 (m-d - lift and slide)\dwgs\wsd001 aluminum wood liftslide (ewls)1.dwg 10/23/2009 2:42 PM

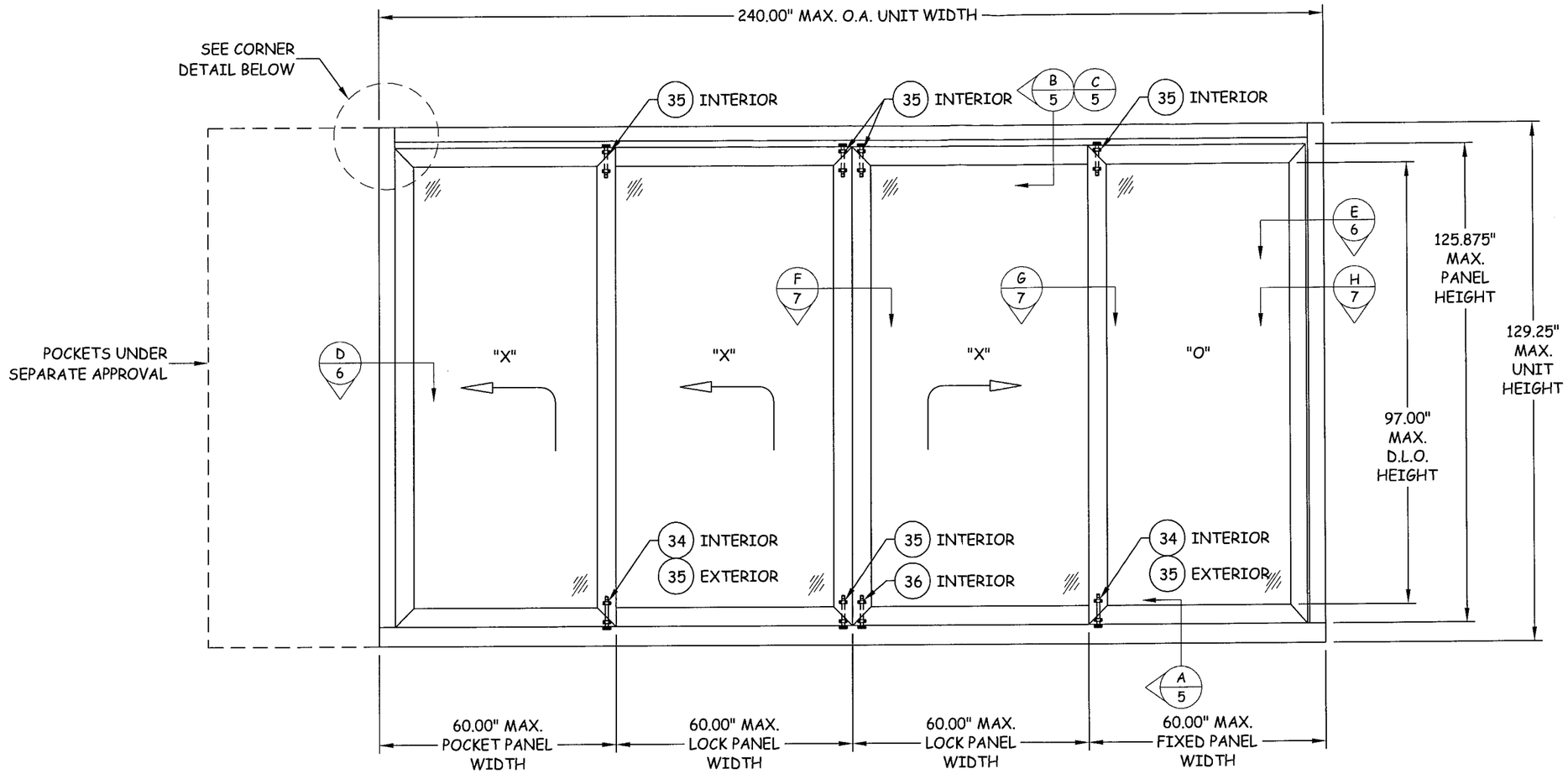

ELEVATION

EXTERIOR VIEW - 2 TRACK (XXXO)
(MAX. FOUR PANELS)

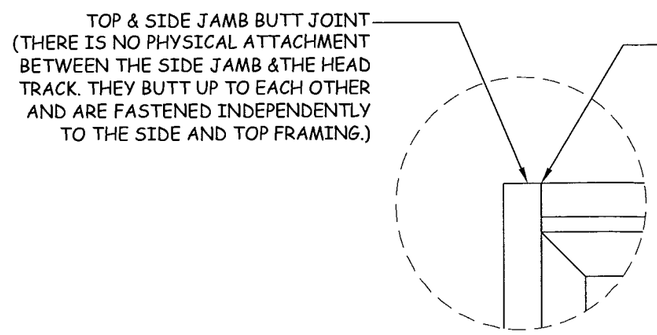

CORNER DETAIL

Approved as complying with the Florida Building Code
Date NOVEMBER 18, 2009
NOA# 08-0915.03
Miami Dade Product Control Division
By

weiland
Sliding Doors and Windows, Inc.
2601 INDUSTRY STREET
OCEANSIDE, CA 92054
PH: (760) 722.8828 FX: (760) 722.8838

TITLE: LIFT AND SLIDE DOOR ELEVATION

PREPARED BY:
CERTWORKS, LLC
127 W. FAIRBANKS AVE., STE. 438
WINTER PARK, FL 32789
PH: (407) 644-6957 FX: (407) 644-2366

REVISIONS

NO.	DESCRIPTION	BY	DATE
A	COMMENTS FROM MIAMI-DADE	JLR	05.05.09
B	UPDATED PER MIAMI-DADE COMMENTS	JLR	09.14.09

10-26-09
KRISTINA S. DAUGHERTY
FLORIDA P. E. NO. 69455
127 W. FAIRBANKS AVE. STE. 438
WINTER PARK, FL 32789
FBPE CERT. OF AUTHORIZATION NO. 28520

DATE:	DWN BY:	CHK BY:	SCALE:
07/22/08	GT	CH	NTS

DWG #: WSD001

SHEET: 3 OF 11

p:\projects\weiland sliding doors\ls-0807-01 (m-d - lift and slide)\dwgs\wsd001 aluminum wood liftslide (awls1).dwg 10/23/2009 2:42 PM

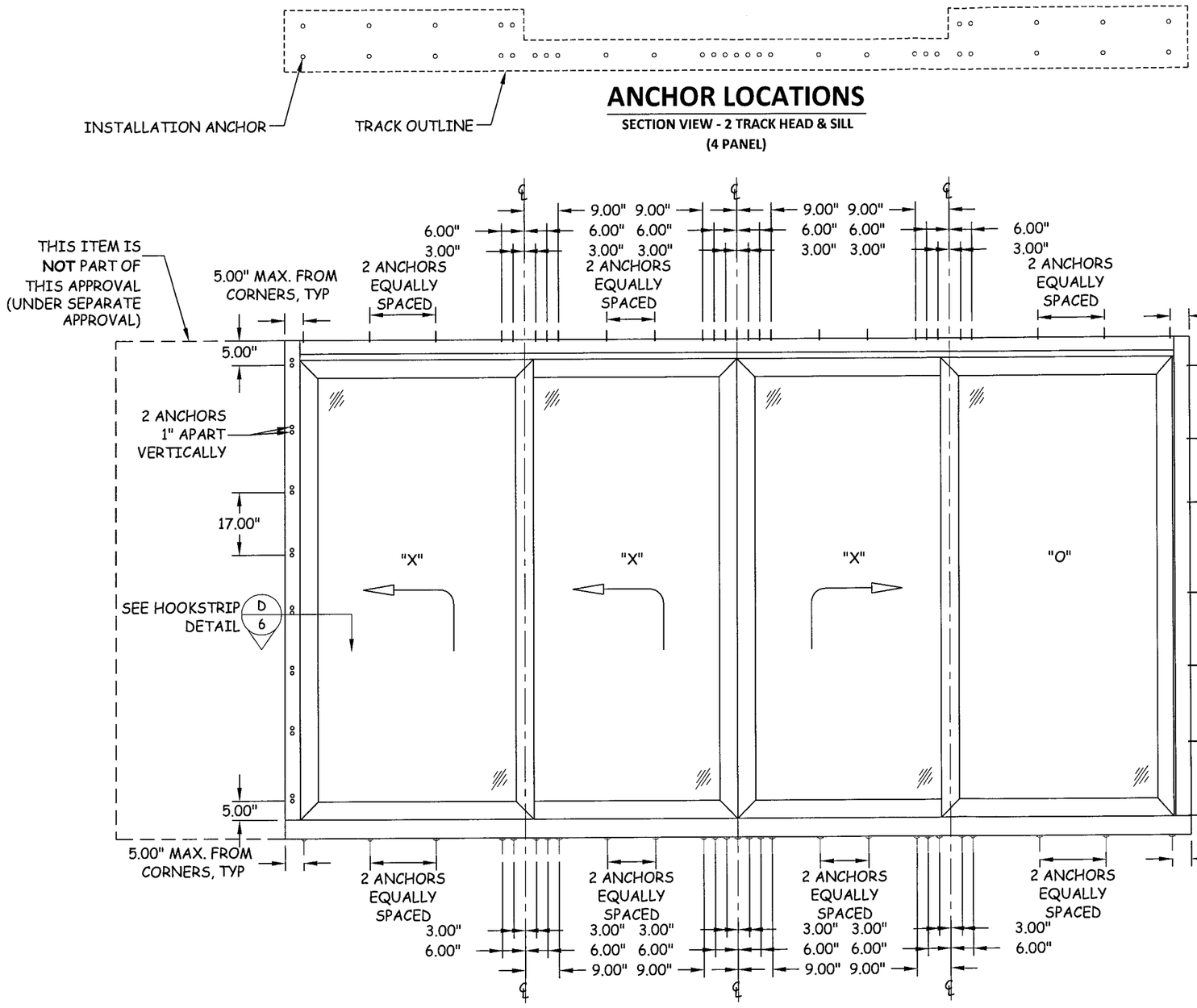

ANCHOR LOCATIONS

SECTION VIEW - 2 TRACK HEAD & SILL

(4 PANEL)

ANCHOR LAYOUT

EXTERIOR VIEW - 2 TRACK

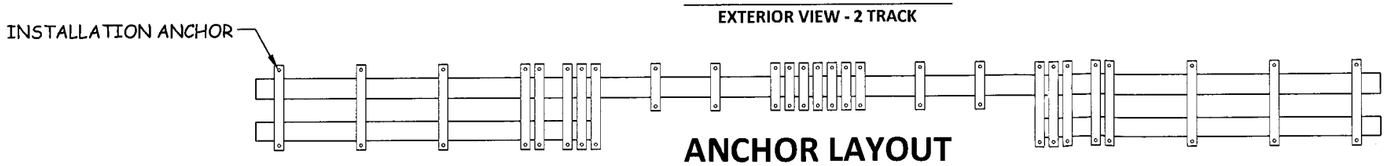

ANCHOR LAYOUT

SECTION VIEW - 2 TRACK

INSTALLATION NOTES:

1. ONE (1) INSTALLATION ANCHOR **PER TRACK** IS REQUIRED AT EACH ANCHOR LOCATION SHOWN ON HEAD AND JAMB.
2. TWO (2) INSTALLATION ANCHORS ARE REQUIRED AT EACH ANCHOR LOCATION SHOWN ON SILL AND AT HOOKSTRIP.
3. FOR INSTALLATION INTO WOOD FRAMING, USE #12 WOOD SCREWS OF SUFFICIENT LENGTH TO ACHIEVE 1 1/2 INCH MINIMUM EMBEDMENT.
4. FOR INSTALLATION THROUGH 1X BUCK TO CONCRETE/MASONRY, OR DIRECTLY INTO CONCRETE/MASONRY, USE 3/16 INCH ITW TAPCONS OF SUFFICIENT LENGTH TO ACHIEVE 1 1/2 INCH MINIMUM EMBEDMENT.

Approved as complying with the Florida Building Code
Date NOVEMBER 18, 2009
NOA# 08-0915.03
Miami Dade Product Control Division
By

weiland
Sliding Doors and Windows, Inc.
2601 INDUSTRY STREET
OCEANSIDE, CA 92054
PH: (760) 722.8828 FX: (760) 722.8838

TITLE: LIFT AND SLIDE DOOR ANCHOR LAYOUTS

PREPARED BY:
CERTWORKS, LLC
127 W. FAIRBANKS AVE., STE. 438
WINTER PARK, FL 32789
PH: (407) 644-6957 FX: (407) 644-2366

REVISIONS

NO.	DESCRIPTION	BY	DATE
A	COMMENTS FROM MIAMI-DADE	JLR	05.05.09
B	UPDATED PER MIAMI-DADE COMMENTS	JLR	09.14.09

10-26-09

KRISTINA G. DAUGHERTY
FLORIDA P. E. NO. 69455
127 W. FAIRBANKS AVE., STE. 438
WINTER PARK, FL 32789
FBPE CERT. OF AUTHORIZATION NO. 28520

DATE:	DWN BY:	CHK BY:	SCALE:
07/22/08	GT	CH	NTS

DWG #: WSD001

SHEET: 4 OF 11

p:\projects\weiland sliding doors\p-0807-01 (m-d - lift and slide)\dwgs\wsd001 aluminum wood liftslide (ow9).dwg 10/23/2009 2:43 PM

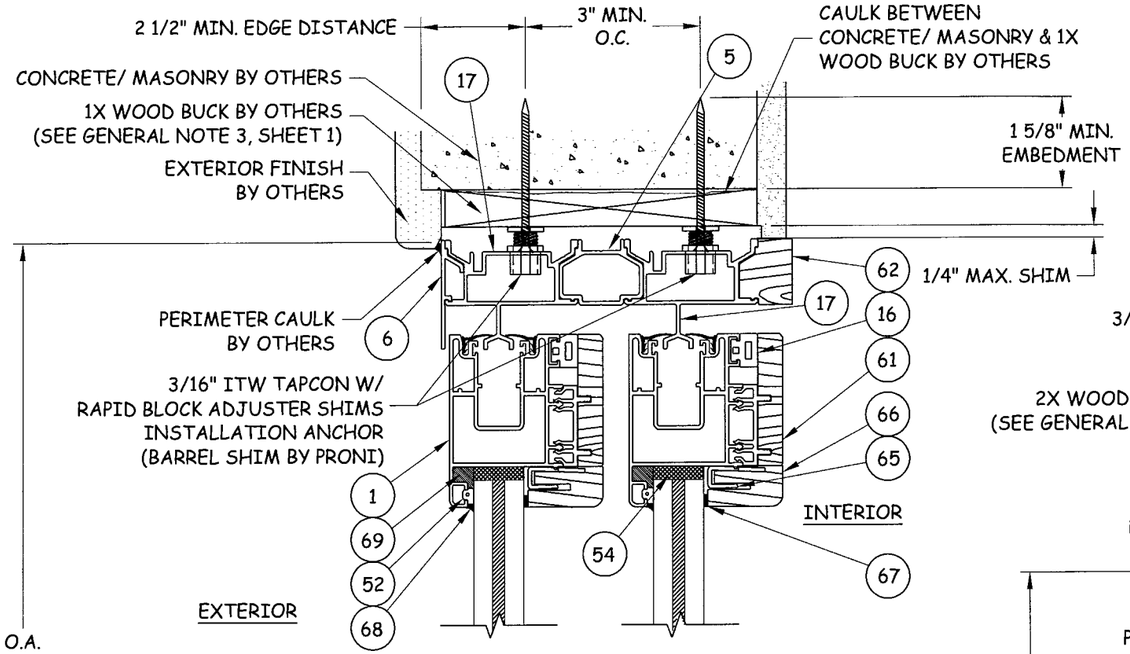

B/5 VERTICAL SECTION

CONCRETE/MASONRY - HEAD
2 TRACK

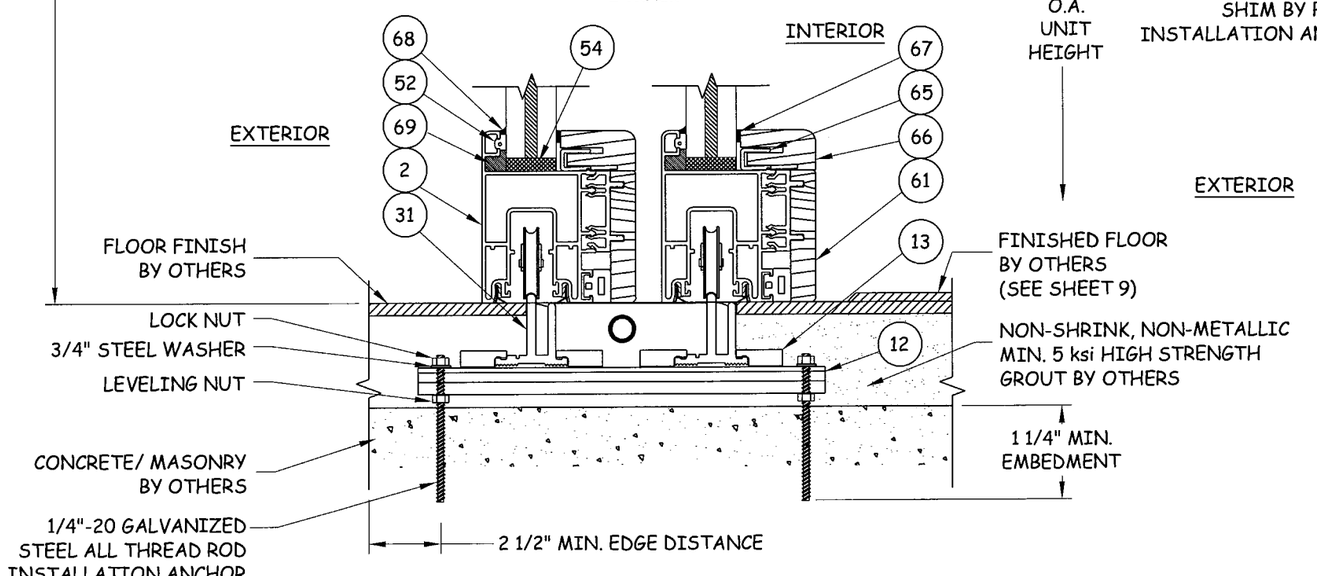

A/5 VERTICAL SECTION

CONCRETE/ MASONRY - SILL
2 TRACK

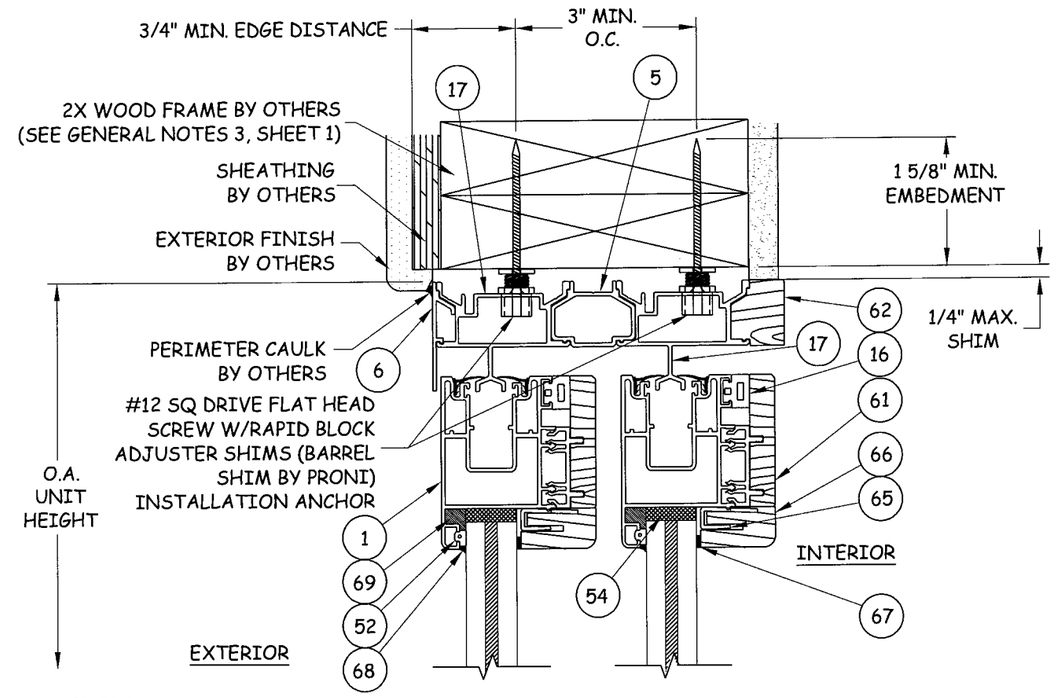

C/5 VERTICAL SECTION

2X WOOD FRAME - HEAD
2 TRACK

Approved as complying with the Florida Building Code
Date NOVEMBER 18, 2009
NOA# 08-0915.03
Miami Dade Product Control Division
By

weiland
Sliding Doors and Windows, Inc.
2601 INDUSTRY STREET
OCEANSIDE, CA 92054
PH: (760) 722.8828 FX: (760) 722.8838

TITLE: LIFT AND SLIDE DOOR VERTICAL SECTIONS

PREPARED BY:
CERTWORKS, LLC
127 W. FAIRBANKS AVE., STE. 438
WINTER PARK, FL 32789
PH: (407) 644-6957 FX: (407) 644-2366

REVISIONS

NO.	DESCRIPTION	BY	DATE
A	COMMENTS FROM MIAMI-DADE	JLR	03.31.09
B	UPDATED PER MIAMI-DADE COMMENTS	JLR	09.14.09
C	UPDATED PER MIAMI-DADE COMMENTS	JLR	10.23.09

10-26-09

KRISTINA S. DAUGHERTY
FLORIDA P. E. NO. 68495
127 W. FAIRBANKS AVE. STE. 438
WINTER PARK, FL 32789
FBPE CERT. OF AUTHORIZATION NO. 28520

DATE:	DWN BY:	CHK BY:	SCALE:
07/22/08	GT	CH	NTS

DWG #: WSD001

SHEET: 5 OF 11

p:\projects\weiland sliding doors\p-0807-01 (m-d - lift and slide)\dwgs\wsd001 aluminum wood liftslide (ow)s1.dwg 10/23/2009 2:46 PM

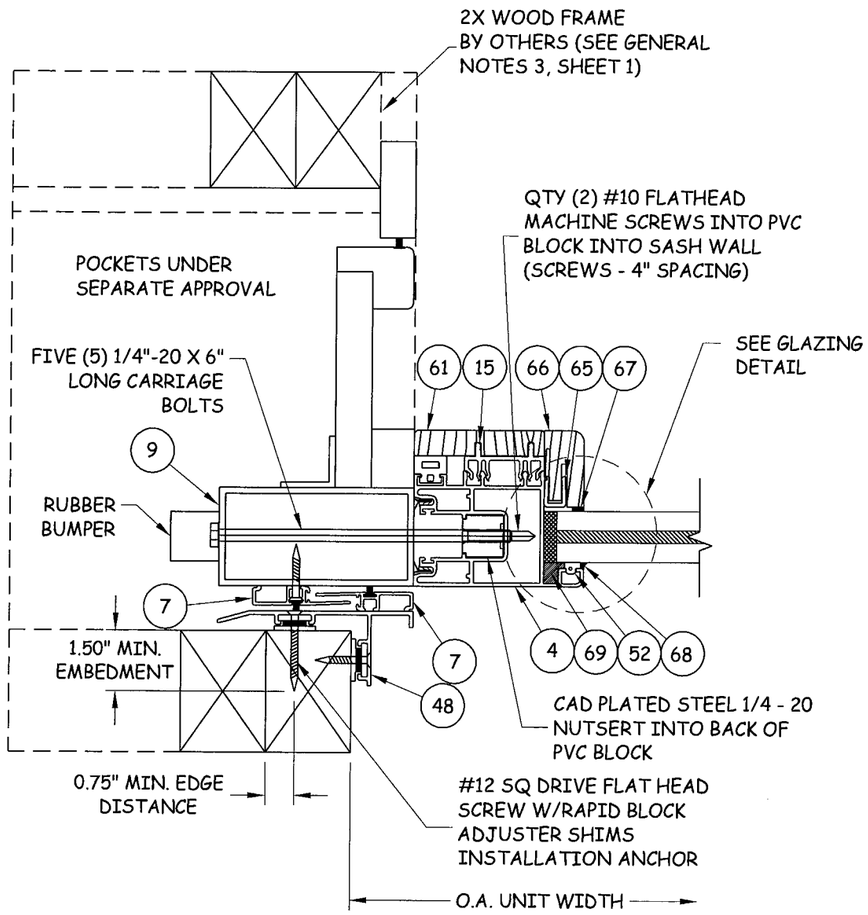

D/6 **HORIZONTAL SECTION**

POCKET JAMB W/ HOOKSTRIP

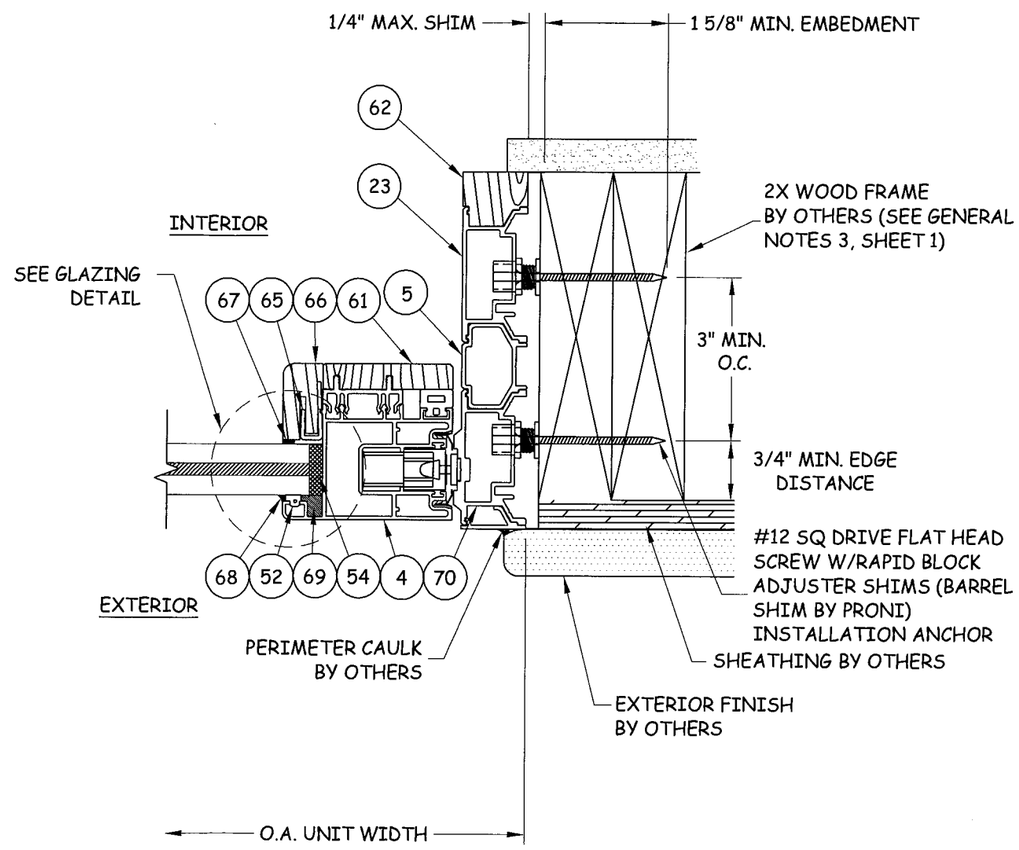

E/6 **HORIZONTAL SECTION**

2X WOOD FRAME - JAMB

Approved as complying with the Florida Building Code
Date NOVEMBER 18, 2009
NOA# 08-0915.03
Miami Dade Product Control Division
By

weiland
Sliding Doors and Windows, Inc.
2601 INDUSTRY STREET
OCEANSIDE, CA 92054
PH: (760) 722.8828 FX: (760) 722.8838

TITLE:
LIFT AND SLIDE DOOR
HORIZONTAL SECTIONS
2 TRACK & PANEL INTERLOCK

PREPARED BY:
CERTWORKS, LLC
127 W. FAIRBANKS AVE., STE. 438
WINTER PARK, FL 32789
PH: (407) 644-6957 FX: (407) 644-2366

REVISIONS

NO.	DESCRIPTION	BY	DATE
A	COMMENTS FROM MIAMI-DADE	JLR	05.05.09
B	UPDATED PER MIAMI-DADE COMMENTS	JLR	09.14.09
C	UPDATED PER MIAMI-DADE COMMENTS	JLR	10.23.09

10-26-09

KRISTINA S. DAUGHERTY
FLORIDA P. E. NO. 68455
127 W. FAIRBANKS AVE., STE. 438
WINTER PARK, FL 32789
FBPE CERT. OF AUTHORIZATION NO. 28520

DATE: 07/22/08
DWN BY: GT
CHK BY: CH
SCALE: NTS
DWG #: WSD001
SHEET: 6 OF 11

p:\projects\weiland sliding doors\p-0807-01 (m-d - lift and slide)\dwgs\wsd001 aluminum wood liftslide (awls)1.dwg 10/23/2009 2:43 PM

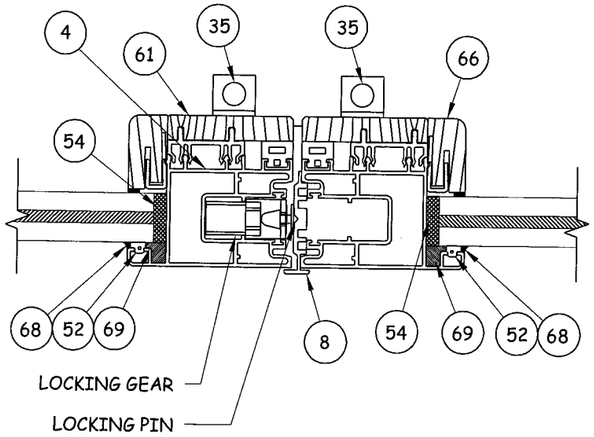

F/7 HORIZONTAL SECTION

PANEL BUTT STILE

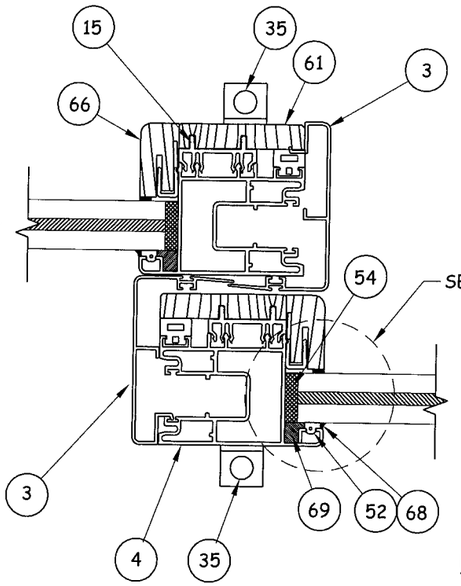

G/7 HORIZONTAL SECTION

PANEL INTERLOCK

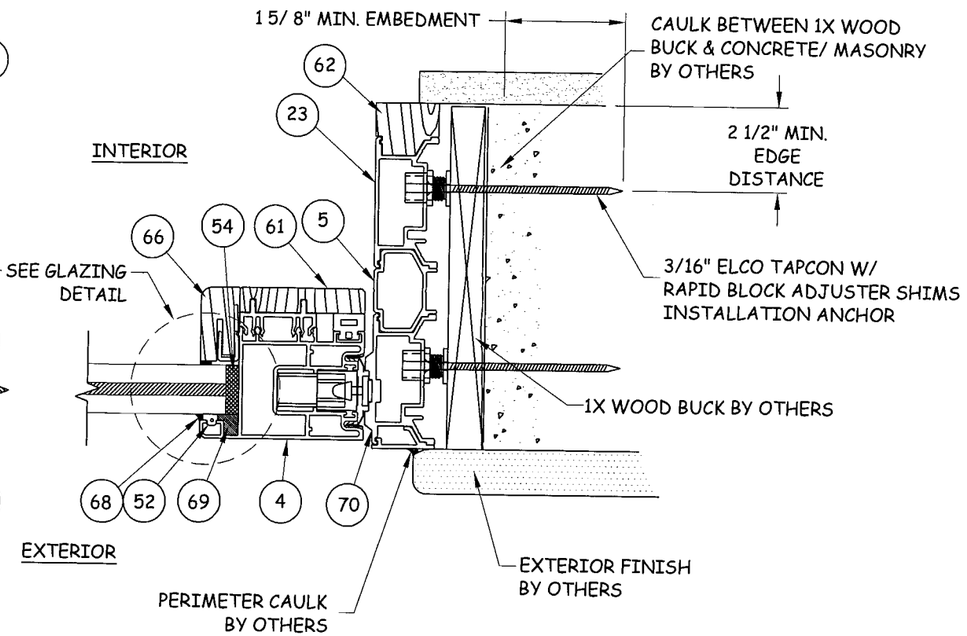

H/7 HORIZONTAL SECTION

1X BUCK / CONCRETE/MASONRY - JAMB
2 TRACK

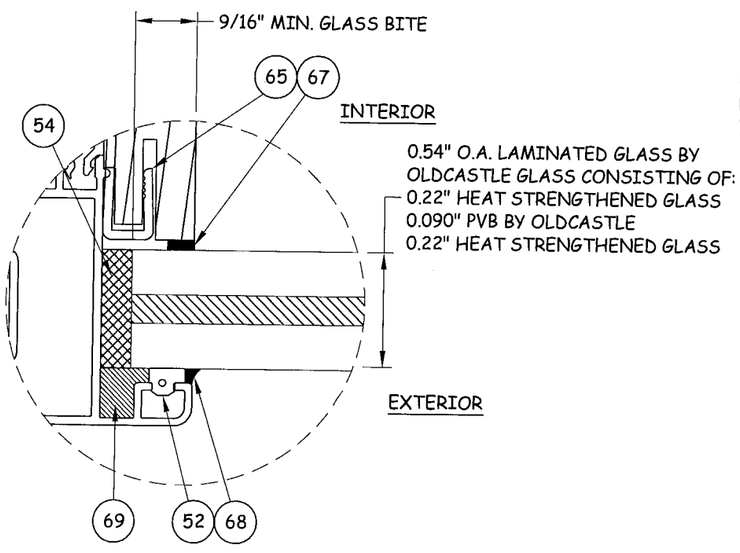

GLAZING DETAIL 1

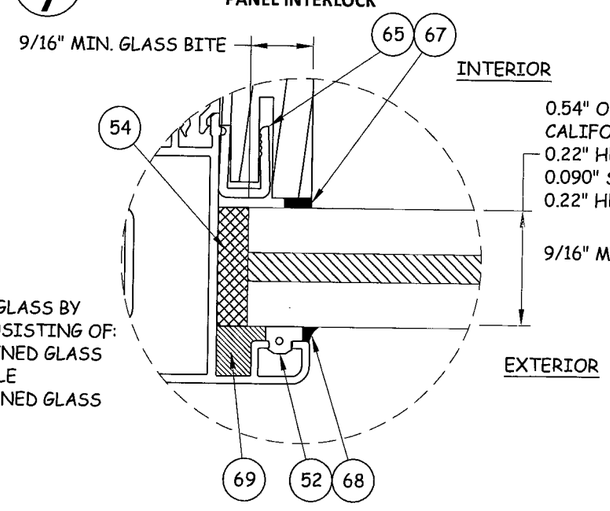

GLAZING DETAIL 2

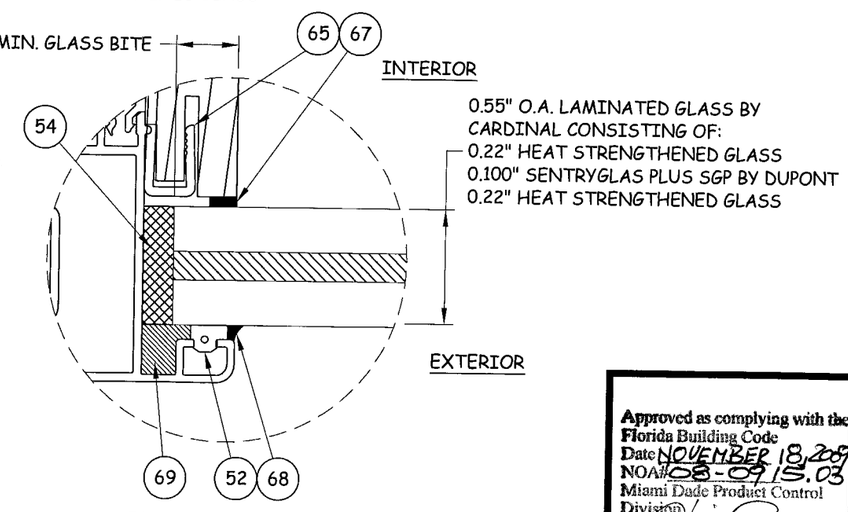

GLAZING DETAIL 3

Approved as complying with the Florida Building Code
Date NOVEMBER 18, 2009
NOA# 08-0915.03
Miami Dade Product Control Division
By

weiland
Sliding Doors and Windows, Inc.
2601 INDUSTRY STREET
OCEANSIDE, CA 92054
PH: (760) 722.8828 FX: (760) 722.8838

TITLE: LIFT AND SLIDE DOOR HORIZONTAL SECTIONS & GLAZING DETAILS

PREPARED BY:
CERTWORKS, LLC
127 W. FAIRBANKS AVE., STE. 438
WINTER PARK, FL 32789
PH: (407) 644-6957 FX: (407) 644-2366

REVISIONS

NO.	DESCRIPTION	BY	DATE
A	COMMENTS FROM MIAMI-DADE	JLR	05.05.09
B	UPDATED PER MIAMI-DADE COMMENTS	JLR	09.14.09
C	UPDATED PER MIAMI-DADE COMMENTS	JLR	10.23.09

KRISTINA S. DAUGHERTY
FLORIDA P. E. NO. 68455
127 W. FAIRBANKS AVE. STE. 438
WINTER PARK, FL 32789
FBPE CERT. OF AUTHORIZATION NO. 28520

16-26-09

DATE: 07/22/08
DWN BY: GT
CHK BY: CH
SCALE: NTS

DWG #: WSD001

SHEET: 7 OF 11

p:\projects\weiland sliding doors\p-0807-01 (m-d - lift and slide)\dwgs\wsd001 aluminum wood liftslide (awls)1.dwg 10/23/2009 2:47 PM

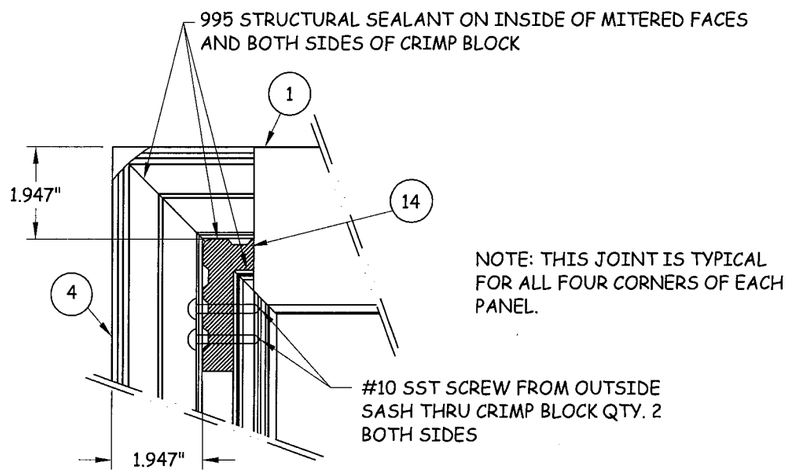

K/8 PANEL CORNER ASSEMBLY

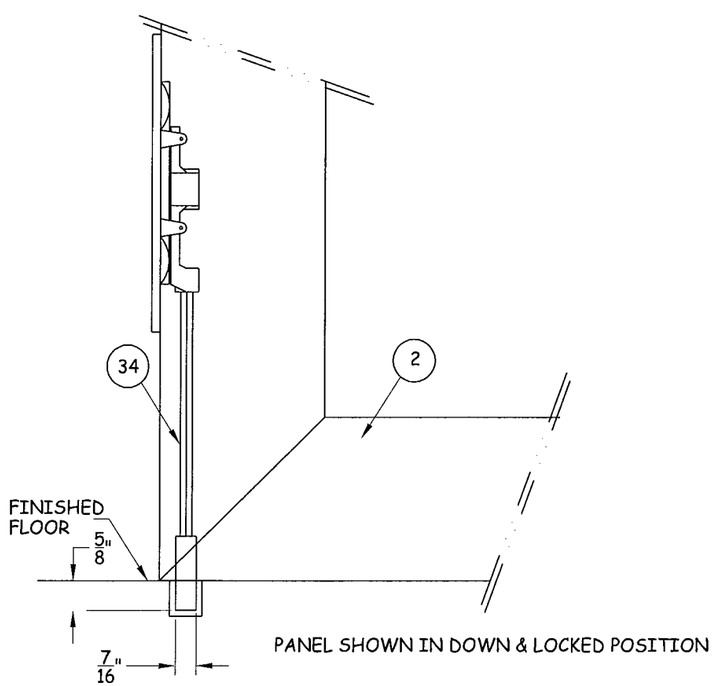

J/8 PANEL CORNER ASSEMBLY

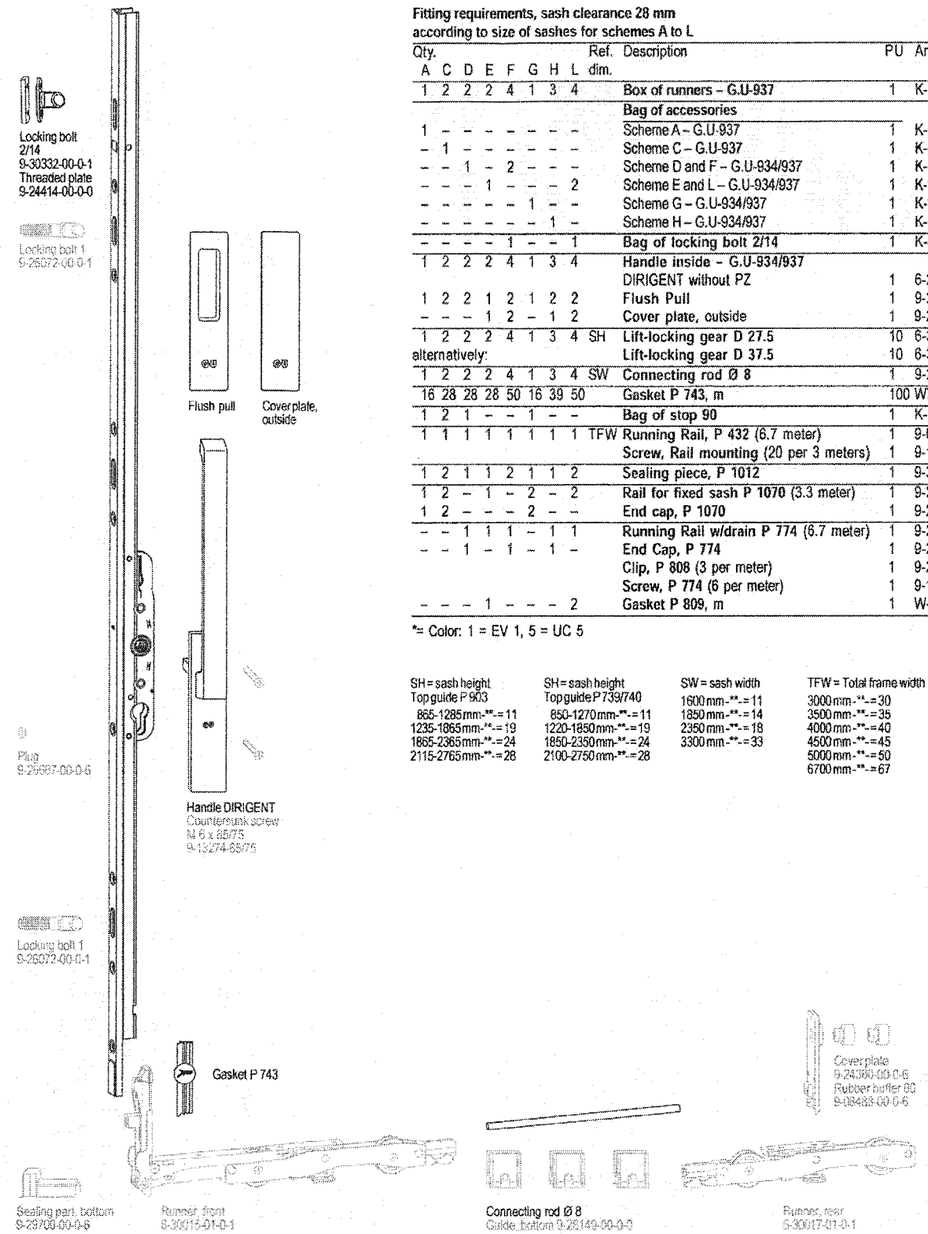

L/8 GU HARDWARE

Fitting requirements, sash clearance 28 mm
according to size of sashes for schemes A to L

Qty. A	C	D	E	F	G	H	L	Ref. dim.	Description	PU	Article No.
1	2	2	2	4	1	3	4		Box of runners – G.U-937	1	K-16493-00-0-1
									Bag of accessories		
1	–	–	–	–	–	–	–		Scheme A – G.U-937	1	K-16608-00-0-1
–	1	–	–	–	–	–	–		Scheme C – G.U-937	1	K-16609-00-0-1
–	–	1	–	2	–	–	–		Scheme D and F – G.U-934/937	1	K-16610-00-0-1
–	–	–	1	–	–	–	2		Scheme E and L – G.U-934/937	1	K-16611-00-0-1
–	–	–	–	–	1	–	–		Scheme G – G.U-934/937	1	K-16618-00-0-1
–	–	–	–	–	–	1	–		Scheme H – G.U-934/937	1	K-16613-00-0-1
–	–	–	–	1	–	–	1		Bag of locking bolt 2/14	1	K-10563-00-0-1
1	2	2	2	4	1	3	4		Handle inside – G.U-934/937 DIRIGENT without PZ	1	6-24606-00-0-*
1	2	2	1	2	1	2	2		Flush Pull	1	9-29526-00-0-*
–	–	–	1	2	–	1	2		Cover plate, outside	1	9-29527-00-0-*
1	2	2	2	4	1	3	4	SH	Lift-locking gear D 27.5	10	6-30019-**-0-*
alternatively:									Lift-locking gear D 37.5	10	6-30021-**-0-*
1	2	2	2	4	1	3	4	SW	Connecting rod Ø 8	1	9-25476-**-0-1
16	28	28	28	50	16	39	50		Gasket P 743, m	100	W751012-00-0-6X
1	2	1	–	–	1	–	–		Bag of stop 90	1	K-12024-00-0-6
1	1	1	1	1	1	1	1	TFW	Running Rail, P 432 (6.7 meter)	1	9-09547-67-0-*
									Screw, Rail mounting (20 per 3 meters)	1	9-13132-32
1	2	1	1	2	1	1	2		Sealing piece, P 1012	1	9-35996-00-0-6
1	2	–	1	–	2	–	2		Rail for fixed sash P 1070 (3.3 meter)	1	9-28298-33-0-*
1	2	–	–	–	2	–	–		End cap, P 1070	1	9-27556-00-0-0
–	–	1	1	1	–	1	1		Running Rail w/drain P 774 (6.7 meter)	1	9-25735-67-0-*
–	–	1	–	1	–	1	–		End Cap, P 774	1	9-27954-00-L/R-6
									Clip, P 808 (3 per meter)	1	9-25730-00-0-0
									Screw, P 774 (6 per meter)	1	9-13253-32-0-0
–	–	–	1	–	–	–	2		Gasket P 809, m	1	W-751014

*= Color: 1 = EV 1, 5 = UC 5

SH = sash height
Top guide P 903
865-1285 mm-**-= 11
1235-1865 mm-**-= 19
1865-2365 mm-**-= 24
2115-2765 mm-**-= 28

SH = sash height
Top guide P 739/740
850-1270 mm-**-= 11
1220-1850 mm-**-= 19
1850-2350 mm-**-= 24
2100-2750 mm-**-= 28

SW = sash width
1600 mm-**-= 11
1850 mm-**-= 14
2350 mm-**-= 18
3300 mm-**-= 33

TFW = Total frame width
3000 mm-**-= 30
3500 mm-**-= 35
4000 mm-**-= 40
4500 mm-**-= 45
5000 mm-**-= 50
6700 mm-**-= 67

Approved as complying with the Florida Building Code
Date NOVEMBER 18, 2009
NOA# 08-0915.03
Miami-Dade Product Control Division
By

weiland
Sliding Doors and Windows, Inc.
2601 INDUSTRY STREET
OCEANSIDE, CA 92054
PH: (760) 722.8828 FX: (760) 722.8838

TITLE: LIFT AND SLIDE DOOR EXPLODED VIEW & CORNER ASSEMBLY

PREPARED BY:
CERTWORKS, LLC
127 W. FAIRBANKS AVE., STE. 438
WINTER PARK, FL 32789
PH: (407) 644-6957 FX: (407) 644-2366

REVISIONS

NO.	DESCRIPTION	BY	DATE
A	COMMENTS FROM MIAMI-DADE	JLR	03.31.09
B	UPDATED PER MIAMI-DADE COMMENTS	JLR	09.14.09

10-26-09

KRISTINA S. DAUGHERTY
FLORIDA P. E. NO. 68455
127 W. FAIRBANKS AVE. STE 438
WINTER PARK, FL 32789
FBPE CERT. OF AUTHORIZATION NO. 26560

DATE:	DWN BY:	CHK BY:	SCALE:
03.25.09	JLR	HN	NTS

DWG #: WSD001

SHEET: 8 OF 11

p:\projects\weiland sliding doors\s-0807-01 (m-d - lift and slide)\dwgs\wsd001 aluminum wood liftslide (owls)1.dwg 10/23/2009 2:43 PM

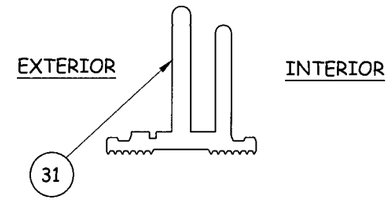

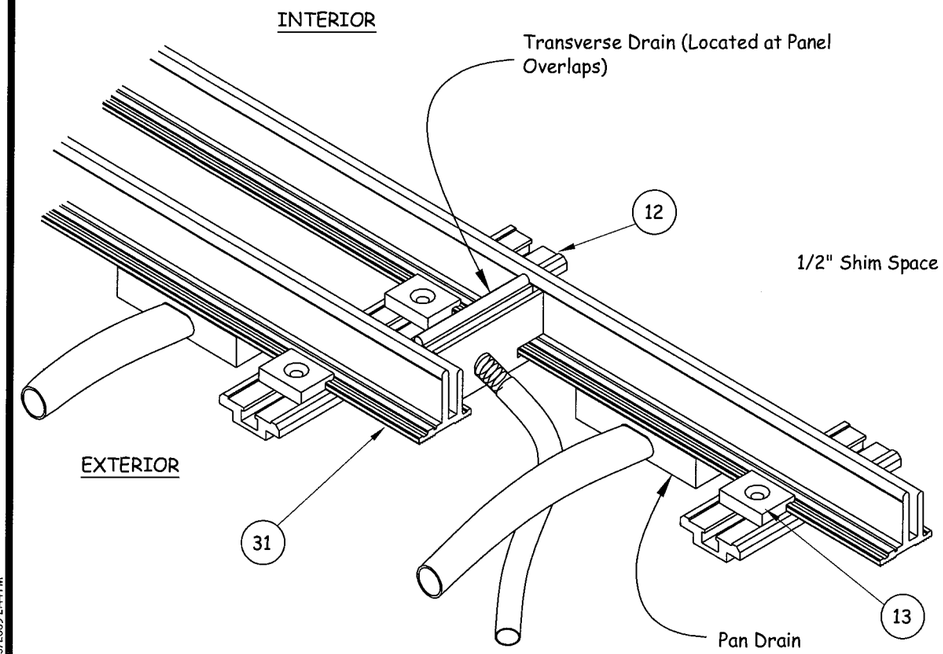

LIFT & SLIDE DRAINAGE TRACK

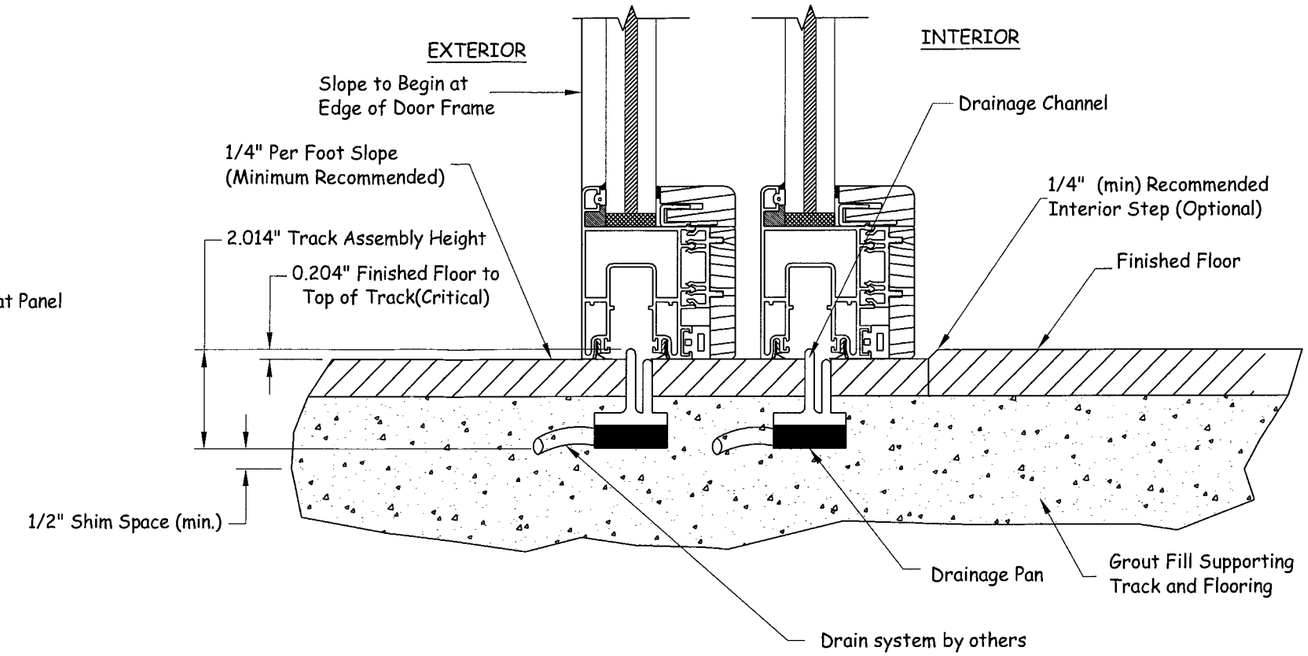

LIFT & SLIDE DRAINAGE TRACK SECTION

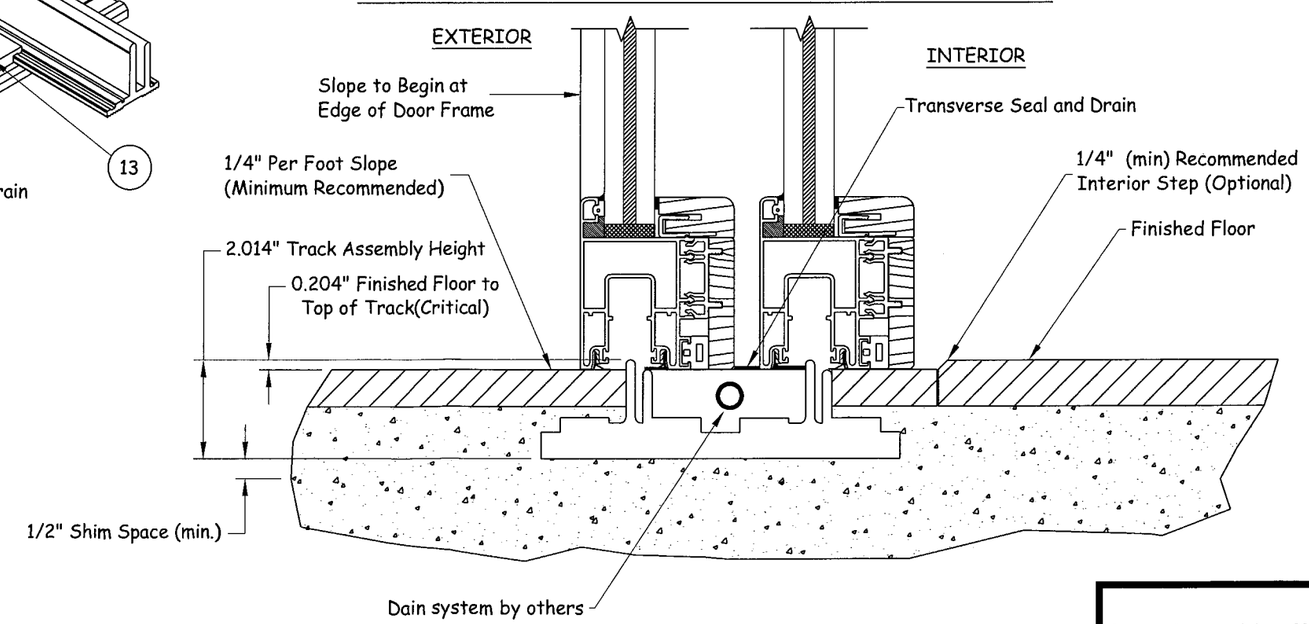

LIFT & SLIDE DRAINAGE TRACK TRANSVERSE DRAIN VIEW

Approved as complying with the Florida Building Code
Date NOVEMBER 18, 2009
NOA# 08-0915.03
Miami Dade Product Control Division
By

weiland
Sliding Doors and Windows, Inc.
2601 INDUSTRY STREET
OCEANSIDE, CA 92054
PH: (760) 722.8828 FX: (760) 722.8838

TITLE: LIFT AND SLIDE DOOR DRAINAGE DETAILS

PREPARED BY:
CERTWORKS, LLC
127 W. FAIRBANKS AVE., STE. 438
WINTER PARK, FL 32789
PH: (407) 644-6957 FX: (407) 644-2366

REVISIONS

NO.	DESCRIPTION	BY	DATE
A	COMMENTS FROM MIAMI-DADE	JLR	05.05.09
B	UPDATED PER MIAMI-DADE COMMENTS	JLR	09.14.09
C	UPDATED PER MIAMI-DADE COMMENTS	JLR	10.23.09

10-26-09

KRISTINA S. DAUGHERTY
FLORIDA P. E. NO. 68455
127 W. FAIRBANKS AVE. STE. 438
WINTER PARK, FL 32789
FBPE CERT. OF AUTHORIZATION NO. 28520

DATE: 07/22/08
DWN BY: GT
CHK BY: CH
SCALE: NTS
DWG #: WSD001
SHEET: 9 OF 11

p:\projects\weiland sliding doors\p-0807-01 (m-d - lift and slide)\dwgs\wsd001 aluminum wood liftslide (awls)).dwg 10/23/2009 2:44 PM

BILL OF MATERIALS

ITEM NO.	DESCRIPTION	MATERIAL	PART NO.	MANUFACTURER	ITEM NO.	DESCRIPTION	MATERIAL	PART NO.	MANUFACTURER
1	AWLS TOP TRACK EXTRUSION	6063-T5	1018	ANAHEIM EXT.	46	FACE INTERLOCK BRUSH, ULTRAPILE T-SHOT	NYLON FIBER	40101	ULTRA FAB
2	AWLS SILL EXTRUSION	6063-T5	1020	ANAHEIM EXT.	47	REAR INTERLOCK BRUSH	NYLON FIBER	40102	ULTRA FAB
3	AWLS REAR INTERLOCK EXTRUSION	6063-T5	1021	ANAHEIM EXT.	48	POCKET INTERLOCK	6063-T5	17325	ANAHEIM EXT.
4	AWLS JAMB EXTRUSION	6063-T5	1022	ANAHEIM EXT.	49	L/S SASH PERIMETER GASKET	EPDM	40103	FFI
5	LS KEY EXTRUSION	6063-T5	1023	ANAHEIM EXT.	50	L/S TOP GASKET	EPDM	40104	FFI
6	LS EXTERIOR FASCIA TOP EXTRUSION	6063-T5	1024	ANAHEIM EXT.	51	REAR INTERLOCK GASKET	PVC	40105	SD CUSTOM
7	LS FACE INTERLOCK EXTRUSION	6063-T5	1025	ANAHEIM EXT.	52	L/S GLAZING GASKET	EPDM	40106	SD CUSTOM
8	LS MEETING STILE ADAPTOR EXTRUSION	6063-T5	1026	ANAHEIM EXT.	53	RTV SILICONE GLAZING COMPOUND	SILICONE	995	DOW CORNING
9	LS FOLLOWER EXTRUSION	6063-T5	1035	ANAHEIM EXT.	54	SETTING BLOCKS 1/4" - 1 5/8" X 2"	NEOPRENE	NSB 85D	SOMMER & MACA
10	LS BOTTOM TRACK W/ DRAINAGE	6063-T5	1076	ANAHEIM EXT.	55	1/2" LAMINATE 1/4" CLEAR, .100 SGP, 1/4" CLEAR	GLASS		CARDINAL
11	LS BOTTOM TRACK W/ DRAINAGE	6063-T5	1107	ANAHEIM EXT.	56	1/2" LAMINATE 1/4" CLEAR, .090 SGP, 1/4" CLEAR	GLASS		OLD CASTLE
12	LS BRIDGE	6063-T5	1037	PARAMOUNT	57	#10 X 3 1/2" STEEL DECK SCREW, SQUARE HEAD	STEEL	1120WS0398	AARON'S
13	LS BRIDGE CLIP	6063-T5	20413	J & J	58	#10 X 2 1/2" SS DECK SCREW, SQUARE HEAD	S. STEEL	1120WS0411	AARON'S
14	AWLS CRIMP BLOCK	6063-T5	1181	ALMIST	59	1/4" X 2" LAG SCREW	GALV. STEEL		NATIONAL
15	LARGE CLIP	PVC	LS-0059	LB PLASTICS	60	1/4" FLAT WASHER	GALV. STEEL		NATIONAL
16	H-BAR	PVC	40108	SD CUSTOM	61	WOOD CLADDING	WOOD	5001	FROST LUMBER
17	TOP FRONT GUIDE 1 - AWLS	6063-T5	20230	FFI	62	INTERIOR WOOD FASCIA	WOOD	5006	FROST LUMBER
18	TOP BACK GUIDE 2 - AWLS	6063-T5	20436	GU	63	REAR WOOD COVER CLADDING	WOOD	5005	FROST LUMBER
19	L/S HANDLES - PERMANENT (BRONZE)	ALUMINUM	20293	GU	64	STAKED-IN-PLACE CORNER GUSSET	ALUMINUM	TD8156	ALMIST
20	L/S HANDLES - REMOVABLE (DRK. BRONZE)	ALUMINUM	20292	GU	65	J-CLIP	PVC		
21	BUSHING L/S HANDLE AWLS	PVC	20416	J & J	66	WOOD GLAZING BEAD	WOOD		
22	L/S EDGE PULLS	PLASTIC	20232	SOUTHCO	67	ADHESIVE FOAM GASKET	FOAM		
23	EXTENSION 933/936 - AWLS	6063-T5	20317	GU	68	DOW 995 CAP BEAD	SILICONE		DOW CORNING
24	WHEEL KIT - BASIC - 934 250KG	ST., ALUM., URETH.	20319	GU	69	DOW 995	SILICONE		DOW CORNING
25	LOCKING PINS W/ BACKING PLATE	S. STEEL	20418	GU	70	LOCKING AWLS JAMB EXTRUSION	6063-T5		ANAHEIM EXT.
26	6 - 32 X 2 MACHINE SCREWS	STEEL		MCMASTER CAR.					
27	LIFT SLIDE GEAR 37.5 MM (DRK. BRONZE)	STEEL, ALUMINUM	20328	GU					
28	L/S ASSEMBLY ALIGNMENT BLOCK	PVC	20399	J & J					
29	10MM SPINDLE FOR PERMANENT HANDLE	STEEL	20405	WEILAND					
30	DRIP PAN WEEP TRACK	PVC	LS-0010	WEILAND					
31	TRANSVERSE DRAIN, DRAINAGE TRACK	6063-T5	20406	WEILAND					
32	JACKING SCREWS	STEEL	600.02	PRONI					
33	JACKING SCREWS	PLASTIC	200.01	PRONI					
34	SURFACE LATCH BOLT (BOTTOM OVERLAP)	STEEL	V832	NATIONAL					
35	SURFACE LATCH BOLT (TOP)	BRASS	40B15	IVES					
36	SURFACE LATCH BOLT LOCKING (BOTTOM)	BRASS	SB1600-8-T	IVES					
37	DRAIN HOSE 3/8" I.D.	PVC		ALSCO					
38	DRAIN HOSE 1/2" I.D.	PVC		ALSCO					
39	1/2" PVC PIPE SCH 40	PVC	VARIOUS	VARIOUS					
40	1/2" PVC TEE S-T-S SCH 40	PVC	801-007	LASCO					
41	1/2" FPT - 1/2" HOSE BARB	BRASS	A-390	WATTS					
42	1/2" FPT - 3/8" HOSE BARB	BRASS	A-298-C	WATTS					
43	3/4" BRASS CHECK VALVE	BRASS	600	WATTS					
44	EPOXY 105	105		WESTEND SYS.					
45	SKIRT PANEL BRUSH, KERF 1/2" PILE	NYLON FIBER	40100	SEAL MAX					

(1) AWLS TOP TRACK
6063-T5
TYPICAL WALL
THICKNESS: .075"

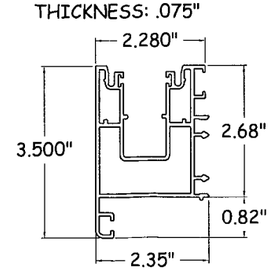

(2) AWLS SILL
6063-T5
TYPICAL WALL
THICKNESS: .075"

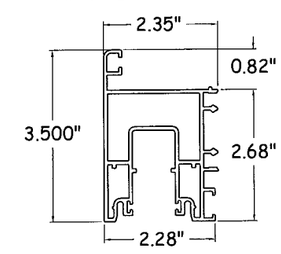

(3) AWLS REAR INTERLOCK
6063-T5
TYPICAL WALL
THICKNESS: .062"

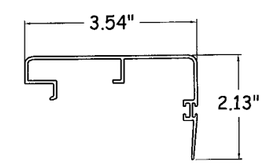

Approved as complying with the Florida Building Code
Date NOVEMBER 18, 2009
NOA# 08-0915.03
Miami Dade Product Control Division
By

weiland
Sliding Doors and Windows, Inc.
2601 INDUSTRY STREET
OCEANSIDE, CA 92054
PH: (760) 722.8828 FX: (760) 722.8838

TITLE: LIFT AND SLIDE DOOR COMPONENTS AND BILL OF MATERIALS

PREPARED BY:
CERTWORKS, LLC
127 W. FAIRBANKS AVE., STE. 438
WINTER PARK, FL 32789
PH: (407) 644-6957 FX: (407) 644-2366

REVISIONS

NO.	DESCRIPTION	BY	DATE
A	COMMENTS FROM MIAMI-DADE	JLR	05.05.09
B	UPDATED PER MIAMI-DADE COMMENTS	JLR	09.14.09

16-26-09
KRISTINA S. DAUGHERTY
FLORIDA P. E. NO. 68455
127 W. FAIRBANKS AVE. STE. 438
WINTER PARK, FL 32789
FBPE CERT. OF AUTHORIZATION NO. 28520

DATE: 07/22/08
DWN BY: GT
CHK BY: CH
SCALE: NTS
DWG #: WSD001
SHEET: 10 OF 11

p:\projects\weiland sliding doors\p-0807-01 (m-d - lift and slide)\dwgs\wsd001 aluminum wood liftslide (awls)1.dwg 10/23/2009 2:44 PM

(4) AWLS JAMB
6063-T5
TYPICAL WALL
THICKNESS: .075"

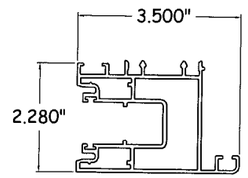

(5) LS KEY
6063-T5
TYPICAL WALL
THICKNESS: .075"

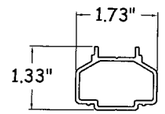

(6) TOP EXTERIOR FASCIA
6063-T5
TYPICAL WALL
THICKNESS: .070"

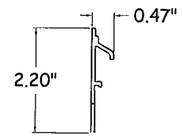

(7) LS FACE INTERLOCK
6063-T5
TYPICAL WALL
THICKNESS: .060"

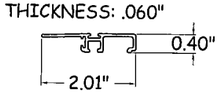

(8) LS MEETING STILE ADAPTER
6063-T5
TYPICAL WALL
THICKNESS: .060"

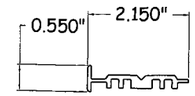

(9) LS FOLLOWER
6063-T5
TYPICAL WALL
THICKNESS: .125"

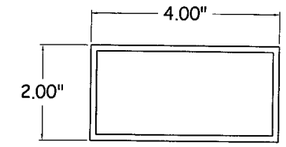

(12) LS BRIDGE
6063-T5

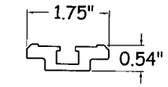

(13) LS BRIDGE CLIP
6063-T5

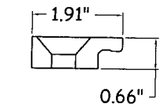

(14) AWLS CRIMP BLOCK
6063-T5

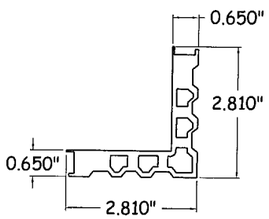

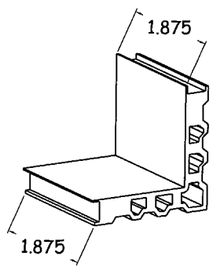

(15) LARGE CLIP
PVC

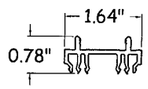

(16) H-BAR
PVC

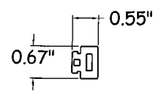

(17) TOP FRONT GUIDE 1 -AWLS
6063-T5
TYPICAL WALL
THICKNESS: .075"

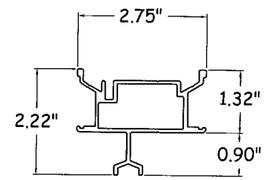

(23) EXTENSION 933/936 - AWLS
6063-T5
TYPICAL WALL
THICKNESS: .075"

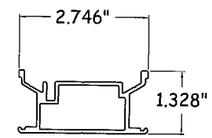

(31) TRANSVERSE DRAIN,
DRAINAGE TRACK
6063-T5
TYPICAL WALL
THICKNESS: .11"

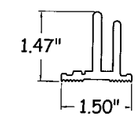

(48) POCKET INTERLOCK
6063-T5 ALUMINUM
TYPICAL WALL
THICKNESS: .08"

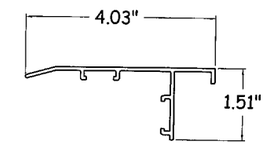

(52) L/S GLAZING GASKET
EPDM

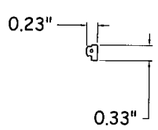

(54) SETTING BLOCK
NEOPRENE

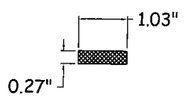

(61) WOOD CLADDING
WOOD

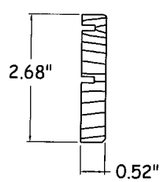

(62) INTERIOR WOOD FASCIA
WOOD

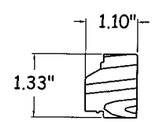

(63) REAR WOOD COVER CLADDING
WOOD

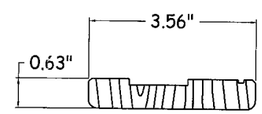

(65) J-CLIP
PVC

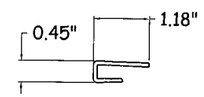

(66) GLAZING BEAD
WOOD

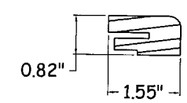

(70) LOCKING AWLS JAMB EXT.
6063-T5
TYPICAL WALL
THICKNESS: .08"

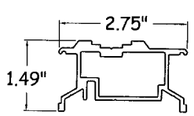

Approved as complying with the
Florida Building Code
Date NOVEMBER 18, 2009
NOA# 08-0915.03
Miami Dade Product Control
Division
By

weiland
Sliding Doors and Windows, Inc.
2601 INDUSTRY STREET
OCEANSIDE, CA 92054
PH: (760) 722.8828 FX: (760) 722.8838

TITLE:
LIFT AND SLIDE DOOR
COMPONENTS
AND BILL OF MATERIALS

PREPARED BY:
CERTWORKS, LLC
127 W. FAIRBANKS AVE., STE. 438
WINTER PARK, FL 32789
PH: (407) 644-6957 FX: (407) 644-2366

REVISIONS

NO.	DESCRIPTION	BY	DATE
A	COMMENTS FROM MIAMI-DADE	JLR	05.05.09
B	UPDATED PER MIAMI-DADE COMMENTS	JLR	09.14.09

16-26-09
KRISTINA S. DAUGHERTY
FLORIDA P. E. NO. 66495
127 W. FAIRBANKS AVE. STE. 438
WINTER PARK, FL 32789
FBPE CERT. OF AUTHORIZATION NO. 28520

DATE:	DWN BY:	CHK BY:	SCALE:
07/22/08	GT	CH	NTS

DWG #: WSD001

SHEET: 11 OF 11

p:\projects\weiland sliding doors\p-0807-01 (m-d - lift and slide)\dwgs\wsd001 aluminum wood liftslide (awls)1.dwg 10/23/2009 2:44 PM