MIAMI-DADE COUNTY
BUILDING CODE COMPLIANCE OFFICE (BCCO)
PRODUCT CONTROL DIVISION

MIAMI-DADE COUNTY, FLORIDA
METRO-DADE FLAGLER BUILDING
140 WEST FLAGLER STREET, SUITE 1603
MIAMI, FLORIDA 33130-1563
(305) 375-2901 FAX (305) 372-6339
www.miamidade.gov/buildingcode

NOTICE OF ACCEPTANCE (NOA)

Enclos Corporation
550 Fairway Drive
Deerfield Beach, FL 33441

SCOPE:

This NOA is being issued under the applicable rules and regulations governing the use of construction materials. The documentation submitted has been reviewed by Miami-Dade County Product Control Division and accepted by the Board of Rules and Appeals (BORA) to be used in Miami Dade County and other areas where allowed by the Authority Having Jurisdiction (AHJ).

This NOA shall not be valid after the expiration date stated below. The Miami-Dade County Product Control Division (In Miami Dade County) and/or the AHJ (in areas other than Miami Dade County) reserve the right to have this product or material tested for quality assurance purposes. If this product or material fails to perform in the accepted manner, the manufacturer will incur the expense of such testing and the AHJ may immediately revoke, modify, or suspend the use of such product or material within their jurisdiction. BORA reserves the right to revoke this acceptance, if it is determined by Miami-Dade County Product Control Division that this product or material fails to meet the requirements of the applicable building code. This product is approved as described herein, and has been designed to comply with the Florida Building Code, including the High Velocity Hurricane Zone.

DESCRIPTION: Series "5530 SPG" Aluminum Window Wall System – L.M.I.

APPROVAL DOCUMENT: Drawing No. **5530-LM**, titled "5530 Series Window Wall – Large Missile Impact", sheets 1 through 22 of 22, dated 7/31/08 with revision 1 dated 4/9/09, prepared by manufacturer, signed and sealed by William D. Cook, P.E., bearing the Miami-Dade County Product Control Approval stamp with the Notice of Acceptance number and approval date by the Miami-Dade County Product Control Division.

MISSILE IMPACT RATING: Large and Small Missile Impact Resistant

LABELING: Each unit shall bear a permanent label with the manufacturer's name or logo, city, state and following statement: "Miami-Dade County Product Control Approved", unless otherwise noted herein.

RENEWAL of this NOA shall be considered after a renewal application has been filed and there has been no change in the applicable building code negatively affecting the performance of this product.

TERMINATION of this NOA will occur after the expiration date or if there has been a revision or change in the materials, use, and/or manufacture of the product or process. Misuse of this NOA as an endorsement of any product, for sales, advertising or any other purposes shall automatically terminate this NOA. Failure to comply with any section of this NOA shall be cause for termination and removal of NOA.

ADVERTISEMENT: The NOA number preceded by the words Miami-Dade County, Florida, and followed by the expiration date may be displayed in advertising literature. If any portion of the NOA is displayed, then it shall be done in its entirety.

INSPECTION: A copy of this entire NOA shall be provided to the user by the manufacturer or its distributors and shall be available for inspection at the job site at the request of the Building Official.

This NOA consists of this page 1 and evidence page E-1, as well as approval document mentioned above.

The submitted documentation was reviewed by **Manuel Perez, P.E.**

MIAMI-DADE COUNTY APPROVED

Enclos Corporation

NOTICE OF ACCEPTANCE: EVIDENCE SUBMITTED

A. DRAWINGS

1. Manufacturer's die drawings and sections.
2. Drawing No **5530-LM**, Sheets 1 through 22 of 22, titled "5530 Series Window Wall – Large Missile Impact", dated 7/31/08 with revision 1 dated 4/9/09, prepared by manufacturer, signed and sealed by William D. Cook, P.E.

B. TESTS

1. Test reports on: 1) Air Infiltration Test, per FBC, TAS 202-94
   2) Uniform Static Air Pressure Test, Loading per FBC TAS 202-94
   3) Water Resistance Test, per FBC, TAS 202-94
   4) Small Missile Impact Test per FBC, TAS 201-94
   5) Large Missile Impact Test per FBC, TAS 201-94
   6) Cyclic Wind Pressure Loading per FBC, TAS 203-94

   along with marked-up drawings and installation diagram of series 5530 aluminum window wall system (specimen #3, #5 & #13, #6, #10 and #21), prepared by Hurricane Test Laboratory, LLC, Test Report No. **HTL-0434-0616-06**, dated 06/23/06 and amendment letter dated 4/28/09, all signed and sealed by Vinu J. Abraham, P.E.

C. CALCULATIONS

1. Anchor verification calculations and structural analysis, complying with FBC-2004, prepared by Bromley-Cook Engineering, dated 8/27/08, signed and sealed by William D. Cook, P.E. **Complies with ASTM E1300-98/02**

D. QUALITY ASSURANCE

1. Miami Dade Building Code Compliance Office (BCCO).

E. MATERIAL CERTIFICATIONS

1. Notice of Acceptance No. **07-1116.04** issued to E.I. DuPont DeNemours & Co., Inc. for their "**DuPont Sentry Glass ® Plus**" dated 01/03/08, expiring on 01/14/12.
2. Notice of Acceptance No. **08-0520.08** issued to Solutia Inc. for their "**Vanceva Composites Glass Interlayer**" dated 7/17/08, expiring on 12/11/13.

F. STATEMENTS

1. Statement letter of conformance, dated June 2, 2008, signed and sealed by William D. Cook, P.E.
2. Statement letter of no financial interest, dated June 2, 2008, signed and sealed by William D. Cook, P.E.
3. Laboratory compliance letter for Test Reports No. **HTL-0434-0616.06**, issued by Hurricane Test Laboratory, Inc., dated 06/23/08, signed and sealed by Vinu J. Abraham, P.E.

G. OTHERS

1. None.

Manuel Perez

Manuel Perez, P.E.
Product Control Examiner
NOA No. 08-0915.09
Expiration Date: May 20, 2014
Approval Date: May 20, 2009

ENCLOS CORP. FLORIDA HURRICANE SYSTEMS
5530 SERIES WINDOW WALL SYSTEM
LARGE MISSILE IMPACT RESISTANT

GLASS TYPES - HEAT STRENGTHENED

MONOLITHIC / LAMINATED

(A)
- 1/4" CLEAR HEAT STRENGTHENED
- .075" VS02 INNER LAYER
- 1/4" CLEAR HEAT STRENGTHENED

(E)
- 1/4" CLEAR HEAT STRENGTHENED
- SGP .090 INNER LAYER
- 1/4" CLEAR HEAT STRENGTHENED

(N)
- 1/4" CLEAR HEAT STRENGTHENED
- .075 VS02 INNER LAYER
- 1/4" CLEAR HEAT STRENGTHENED W/FRIT

"VS02" VANCEVA STORM INNER LAYER BY VIRACON
"SGP" (SENTRGLAS PLUS) INNER LAYER BY DUPONT

GLASS TYPES - TEMPERED

MONOLITHIC / LAMINATED

(At)
- 1/4" CLEAR TEMPERED
- .075" VS02 INNER LAYER
- 1/4" CLEAR TEMPERED

(Ct)
- 1/4" CLEAR TEMPERED
- .100 SGP INNER LAYER
- 1/4" CLEAR TEMPERED

INSULATED / LAMINATED

(Bt)
INNER LITE-
- 1/4" CLEAR TEMPERED
- .075" VS02 INNER LAYER
- 1/4" CLEAR TEMPERED
- 1/2" CLEAR AIR SPACE

OUTER LITE-
- 1/4" CLEAR TEMPERED

(Dt)
INNER LITE-
- 1/4" CLEAR TEMPERED
- SGP.100 INNER LAYER
- 1/4" CLEAR TEMPERED
- 1/2" CLEAR AIR SPACE

OUTER LITE-
- 1/4" CLEAR TEMPERED

DRAWING INDEX

SHEET	DESCRIPTION
1/22	COVER SHEET
2/22	BILL OF MATERIALS
3/22	5530 ELEVATIONS
4/22	5530 GLASS SIZE CHARTS (LAMINATED/CAPTURED)
5/22	5530 GLASS SIZE CHARTS (LAMINATED/STRUCTURAL)
6/22	5530 GLASS SIZE CHARTS (INSULATED/CAPTURED)
7/22	5530 GLASS SIZE CHARTS (INSULATED/STRUCTURAL)
8/22	5530 ALLOWABLE MULLION SPAN CHARTS
9/22	DETAILS - HEAD AND SILL CAPTURED
10/22	DETAILS - HEAD, SILL & INT. HORIZONTAL
11/22	DETAILS - HEAD & SILL (STRUCTURALLY GLAZED)
12/22	DETAILS - HEAD, SILL & INT. HORIZONTAL
13/22	DETAILS - HEAD AND SILL WITH STRAP ANCHOR
14/22	DETAILS - MULLION & JAMB (CAPTURED)
15/22	DETAILS - MULLION & JAMB (INSULATED/CAPTURED)
16/22	DETAILS - MULL & JAMB (STRUCTURALLY GLAZED)
17/22	DETAILS - DOOR JAMB ANCHOR
18/22	ANCHORAGE OPTIONS CHARTS
19/22	ANCHORAGE OPTIONS CHARTS
20/22	EXTRUSIONS
21/22	EXTRUSIONS
22/22	FRAME ASSEMBLY DETAILS

GENERAL NOTES

1.) ALUMINUM WINDOW WALL SYSTEM IS TESTED FOR LARGE MISSILE IMPACT. SHUTTERS ARE NOT REQUIRED.

2.) FLORIDA BUILDING CODE REQUIREMENTS (HVHZ) REQUIREMENTS: TAS-201 - LARGE IMPACT TAS-202 - AIR LEAKAGE, WATER PENETRATION & STRUCTURAL PERFORMANCE (WATER @ 20 psf.) TAS-203 - CYCLING

3.) THIS SYSTEM MAY BE USED IN CONJUNCTION WITH APPROVED ENTRANCE DOORS.

4.) CODE REQUIREMENTS FOR SAFEGUARDS MUST BE OBSERVED.

5.) THIS PRODUCT IS DESIGNED TO COMPLY WITH THE HIGH VELOCITY HURRICANE ZONE OF THE 2007 FLORIDA BUILDING CODE (FBC-2007)

6.) WOOD BUCKS BY OTHERS MUST BE ANCHORED PROPERLY TO TRANSFER LOADS TO THE STRUCTURE. BUCKS SHALL BE DESIGNED BY PROFESSIONAL ENGINEER OF RECORD.

7.) OPENINGS SHALL BE CONSTRUCTED IN AN ACCEPTABLE MANNER BY WHICH INSTALLED ALUMINUM FRAMES CAN BE PROPERLY ANCHORED TO THE STRUCTURE ACCORDING TO DETAILS AND CHARTS ON THESE DESIGN DRAWINGS.

8.) ANCHORS SHALL BE AS LISTED IN CHARTS AND SPACED AS SPCIFIED ON THESE DESIGN DRAWINGS.

9.) ANCHOR EMBEDMENT TO BASE MATERIAL SHALL BE AS SPECIFIED ON THESE DESIGN DRAWINGS (BEYOND WALL DRESSING OR STUCCO)

10.) ALL STEEL IN CONTACT WITH ALUMINUM TO BE PAINTED OR PLATED. COATING SHALL BE BITUMINOUS OR ASPHALTIC IN CONFORMANCE WITH FBC 2003.8.4.1.

11.) 33% INCREASE IN ALLOWABLE STRESS WAS NOT USED IN THE DESIGN OF THE FRAMING SYSTEM AND ANCHORS.

GASKET/SETTING BLOCK LIST

	PART # PG-1	70 DURO SILICONE	PRESET GASKET		PART # GSB-1	85 DURO EPDM	SETTING BLOCK FOR 1-3/8" GLASS
	PART # HA-132	70 DURO EPDM	MULLION SEAL GASKET		PART # GSB-2	85 DURO EPDM	SETTING BLOCK FOR INTERMEDIATE HORIZ. 1-3/8" GLASS
	PART # WG-1	70 DURO EPDM	WEDGE GASKET				
	PART # BG-1	70 DURO EPDM	ROLL-ON BULB GASKET		PART # GSB-3	85 DURO EPDM	SETTING BLOCK FOR 9/16" GLASS
	PART # HA-114	70 DURO SILICONE	AIR SEAL BULB GASKET		PART # GSB-4	85 DURO EPDM	SETTING BLOCK FOR INTERMEDIATE HORIZ. 9/16" GLASS
	PART # HA-108	70 DURO SILICONE	AIR SEAL BULB GASKET		PART # BJF-3		9/16" GLASS BUTT JOINT FILLER
	PART # HA-103	70 DURO SILICONE	AIR SEAL BULB GASKET		PART # BJF-4		1 3/8" BUTT JOINT FILLER

ABBREVIATIONS

R.O. = ROUGH OPENING
O.A.F. = OVERALL FRAME
D.L.O. = DAYLITE OPENING
GL. GLASS
L.M.I. = LARGE MISSILE IMPACT
S.M.I. = SMALL MISSILE IMPACT
OPP. = OPPOSITE
MAX. = MAXIMUM
MIN. = MINIMUM
CONC. = CONCRETE

FOR MIAMI-DADE CO. B.C.C.O.

Approved as complying with the Florida Building Code
Date MAY 20, 2009
NOA# 08-0915.09
Miami Dade Product Control Division
By Manuel Perez

enclos corp
2770 Blue Water Road
Eagan, MN 55121-1400
Tel. 651-796-6100 • Fax 651-994-6860
Engineering Locations
Eagan, MN • Montreal, QC, CA • Moncton, NB, CA
St. Louis, MO • Manila, PH

REVISIONS

1.	4/9/2009 REV'S PER M.D.B.C.C.O.

SEAL:

APR 2 8 2009
Reviewed For Structural Integrity Only

BROMLEY - COOK ENGINEERING, INC.
STRUCTURAL ENGINEERING SERVICES
5440 N.W. 33RD AVENUE SUITE 100
FORT LAUDERDALE, FLORIDA 33309
TEL: (954) 772-4624 FAX: (954) 772-4634
CERT. OF AUTH. #00009124
WILLIAM D. COOK P.E.
FLA P.E. # 43804
FLA S.I. # 2008

Date	Scale
7/31/08	

Drawing No.
5530-LM

Drawing Title
5530 SERIES WINDOW WALL
LARGE MISSILE IMPACT

Sheet No.
1/22

BILL OF MATERIALS

1. STEEL BAR 1/4" x 3 3/4" (ASTM A36) (PAINTED FOR PROTECTION)
2. N/A
3. STEEL BAR 1/4" x 5" (ASTM A36) (PAINTED FOR PROTECTION)
4. STEEL BAR 1/4" x 4" (ASTM A36)
5. N/A
6. N/A
7. N/A
8. 2" x 3" x 1/4" STEEL TUBE ATTACHED TO STEEL BAR (ASTM A500-B)
9. N/A
10. ANTI-BUCKLING CLIPS 4" LONG, @ 6" FROM TOP & BOTTOM AND 24" O.C. MAX
11. 1/4-20 x 3/4" GRADE 5 ZINC PLATED HWH TAPTITE SCREWS (@ HORIZONTAL RAILS U.N.O.)
12. 1/4-20 x 3/4" GRADE 5 ZINC FH PLATED TAPTITE SCREWS, (2) PER HORIZONTAL RAIL
13. #14 x 1 1/2" HWH SMS TYPE A @ HORIZONTAL RAILS (LOCATION VARIES)
14. #14 x 1 1/2" HWH SMS TYPE A @ HORIZONTAL RAILS
15. #14 x 1 1/2" FL HD SMS TYPE A @ HORIZONTAL RAILS
16. 1/4-20 x 3/4" GRADE 5 ZINC PLATED FH TAPTITE SCREWS
17. 1/4-20 x 1" GRADE 5 ZINC PLATED HWH TAPTITE SCREWS
18. #10-16 x 3/4" HWH DRIL-FLEX
19. #10 x 1 1/4" FH SMS
20. 3/8-16 x 1 1/2" FH GRADE 5 BOLTS, TACK WELDED TO STEEL BAR, W/WASHERS & LOCKNUTS @ 36" O.C.
21. #14 x 1" FH SMS, (2) PER ANCHOR, SEAL HEADS
22. 1/4-20 x 3/4" HWH DRIL-FLEX
23. #10 x 3/4" FH SMS
24. N/A
25. N/A
26. SILICONE SEALANT & BACKER ROD DOW CORNING 790, 791 OR 795
27. N/A
28. 3/8" DIA WEEP HOLES @ 1/3 PTS.
29. 3/16" DP. x 3/8" LONG NOTCH @ 1/3 PTS.
30. N/A
31. 7/8" MIN. STRUCTURAL SEALANT DOW-CORNING 983 OR 995
32. 1 3/8" MIN. STRUCTURAL SEALANT DOW-CORNING 983 OR 995
33. 6 1/2" x 4 1/4" x 1/4" EXTRUDED ALUM ANGLE (# 41035) X 5" LG.
34. 5" x 4 1/4" x 1/4" EXTRUDED ALUM TEE (# 41036)
35. 1/4" x 1/2" NORTON TAPE, ADHESIVE TWO SIDES
36. N/A
37. ACCESS HOLES AT FASTENERS
38. SHIMS AS REQUIRED
39. 1/4-20 x 1 1/2" GRADE 5 ZINC PLATED FH TAPTITE SCREWS
40. 3/8-16 GRADE 5 ZINC PLATED HWH TAPTITE SCREWS
41. 1/2-13 GRADE 5 ZINC PLATED HWH TAPTITE SCREWS
42. 1" X 5/8" X 1/8" ALUMINUM ANGLE (6063-T6)
43. SILICONE BOOT, 3" LONG, ACROSS MULLION JOINTS DOW-CORNING
44. #10 x 5/8" LOW PROFILE FH SMS
45. N/A
46. SEALANT - FULL PERIMETER DOW CORNING 790, 791 OR 795
47. N/A
48. N/A
49. N/A
50. N/A
51. N/A
52. N/A
53. 3/16" x 1/2" LG. WEEP SLOTS @ 1/4 PTS.
54. N/A
55. N/A
56. N/A
57. N/A
58. N/A
59. N/A
60. N/A
61. N/A
62. N/A
63. N/A
64. N/A
65. N/A
66. N/A
67. 1/2-13 x 1" GRADE 5 ZINC PLATED HWH TAPTITE SCREWS
68. N/A
69. EXTRUDED ALUMINUM SNAP-IN POCKET CLOSURE (6063-T6)
70. N/A
71. N/A
72. N/A
73. 1/2"ø (M12) GR 8.8 HI-TENSILE TEE BOLT & NUT FOR HALFEN ANCHOR CHANNELS
74. 1/2"ø HWH POWER BOLTS, (2) PER ANCHOR
75. 1/2-13 GRADE 5 ZINC PLATED HWH TAPTITE SCREWS
76. 3/8"ø HWH POWER BOLTS, (2) PER ANCHOR
77. 3/8"ø HWH POWERS CO. WEDGE BOLTS, (2) PER ANCHOR
78. N/A
79. N/A
80. N/A
81. N/A
82. N/A
83. 1/4" THK x 1 9/16" SQ EXTRUDED ALUMINUM SERRATED WASHER
84. N/A
85. N/A
86. N/A
87. N/A
88. N/A
89. N/A
90. N/A
91. 1/2"ø HWH POWERS CO. WEDGE BOLTS, (2) PER ANCHOR
92. 1/2"ø HWH POWERS CO. WEDGE BOLTS,
93. HALFEN EMBED. MUST BE ENGINEERED FOR SUBSTRATE CONDITIONS.
94. SCHEDULE 80 ALUM. PIPE SLEVE 1 3/8" LONG (6063-T6)

FOR MIAMI-DADE CO. B.C.C.O.

Approved as complying with the Florida Building Code
Date MAY 20, 2009
NOA# 08-0915.09
Miami-Dade Product Control Division
By Manuel Perez

enclos corp

2770 Blue Water Road
Eagan, MN 55121-1400
Tel. 651-796-6100 • Fax 651-994-6300

Engineering Locations
Eagan, MN • Montreal, QC, CA • Moncton, NB, CA
St. Louis, MO • Manila, PH

REVISIONS

1	4/9/2009 REV'S PER M.D.B.C.C.O.

SEAL:

APR 28 2009

Reviewed For Structural Integrity Only

BROMLEY · COOK ENGINEERING, INC.
STRUCTURAL ENGINEERING SERVICES
5440 N.W. 33RD AVENUE SUITE 100
FORT LAUDERDALE, FLORIDA 33309
TEL: (954) 772-4824 FAX: (954) 772-4634
CERT. OF AUTH. #00009124
WILLIAM D. COOK P.E.
FLA P.E. # 43564
FLA S.I. # 2008

Date	Scale
7/31/08	

Drawing No.
5530-LM

Drawing Title
5530 SERIES WINDOW WALL
LARGE MISSILE IMPACT

Sheet No.
2/22

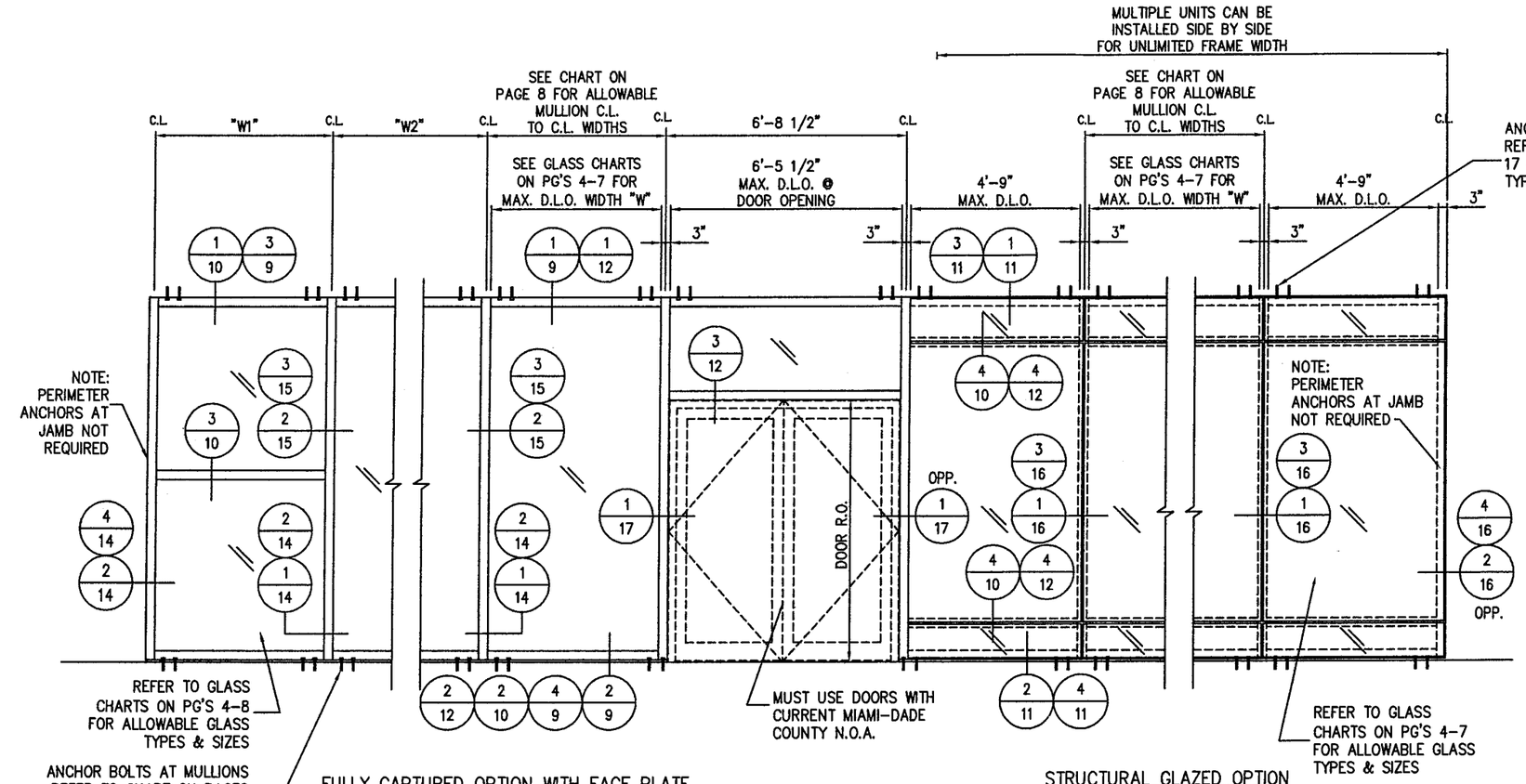

1/3 ELEVATION (VIEWED FROM EXTERIOR)
SCALE: 1/4" = 1'-0"

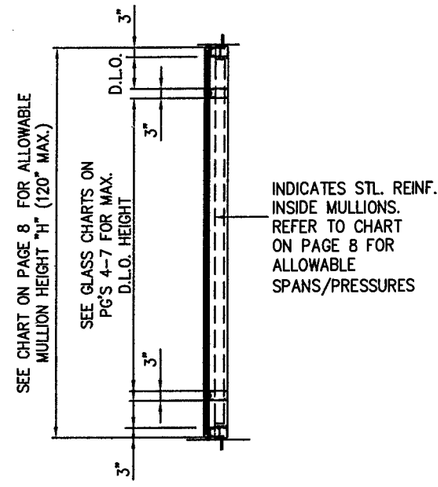

2/3 TYPICAL SECTION
SCALE: 1/4" = 1'-0"

NOTES:

1: DETERMINE DESIGN WIND LOAD REQUIREMENT BASED ON WIND VELOCITY, BLDG. HEIGHT, WIND ZONE. USING APPLICABLE ASCE 7 STANDARDS.

2: SEE CHARTS ON SHEETS 4-7 FOR ALLOWABLE DESIGN LOAD CAPACITY FOR DESIRED GLASS SIZE.

3: SEE CHARTS ON SHEET 8 FOR ALLOWABLE DESIGN LOAD CAPACITY OF MULLION HEIGHTS AND MODULE WIDTHS. THE CAPACITY SHOULD EQUAL OR EXCEED THE DESIGN LOAD GIVEN FOR THE SPECIFIC PROJECT.

4: SEE CHARTS ON SHEETS 18 & 19 TO SELECT ANCHOR OPTION AND SUBSTRATE WITH CAPACITY EQUAL TO OR GREATER THAN DESIGN LOAD GIVEN FOR THE SPECIFIC PROJECT.

5: LOWEST VALUE OF ALL CHARTS SHALL APPLY TO THE ENTIRE ASSEMBLY.

NOTE:

FOR STRUCTURALLY GLAZED SYSTEM OPTION, SEE FLORIDA BUILDING CODE SECTION 2415 FOR REQUIREMENTS.

FOR MIAMI-DADE CO. B.C.C.O.

Approved as complying with the Florida Building Code
Date MAY 20, 2009
NOA# 08-0915.09
Miami Dade Product Control Division
By: Manuel Perez

enclos corp
2770 Blue Water Road
Eagan, MN 55121-1400
Tel. 651-796-6100 • Fax 651-994-6300
Engineering Locations
Eagan, MN • Montreal, QC, CA • Moncton, NB, CA
St. Louis, MO • Manila, PH

REVISIONS

1.	4/9/2009 REV'S PER M.D.B.C.C.O.

SEAL:

APR 28 2009
Reviewed For Structural Integrity Only

BROMLEY - COOK ENGINEERING, INC.
STRUCTURAL ENGINEERING SERVICES
5440 N.W. 33RD AVENUE SUITE 100
FORT LAUDERDALE, FLORIDA 33309
TEL: (954) 772-4624 FAX: (954) 772-4634
CERT. OF AUTH. #00009124
WILLIAM D. COOK P.E.
FLA P.E. # 43904
FLA S.I. # 2008

Date	Scale
7/31/08	

Drawing No.
5530-LM

Drawing Title
5530 SERIES WINDOW WALL
LARGE MISSILE IMPACT

Sheet No.
3/22

CAPTURED SYSTEM

MAX. DESIGN PRESSURES (P.S.F.) FOR VARIOUS GLASS TYPES

GLASS WD. D.L.O.	GLASS HGT. D.L.O.	GLASS TYPES (MONOLITHIC LAMINATED – LARGE MISSILE IMPACT) A	At	E	Ct	N
42" 48" 52" 54" 57"	60"	+90, −143	+110, −130	+90, −90	+110, −130	+110, −130
42" 48" 52" 54" 57"	72"	+90, −143				+110, −130
42" 48" 52" 54" 57"	78"	+90, −90				+65, −65
42" 48" 52" 54" 57"	84"					
42" 48" 52" 54" 57"	90"		+110, −130	+90, −90	+110, −130	+65, −65
42" 48" 52" 54" 57"	102"					
42" 48" 52" 54" 57"	114"	+90, −90				

TESTED GLASS (MONOLITHIC):

A	57" X 72" 57" X 114"	+90 / −143 +90 / −90
At	57" X 90"	+110 / −130
Ct	57" X 90"	+110 / −130
E	57" X 90"	+90 / −90
N	57" X 90"	+110 / −130

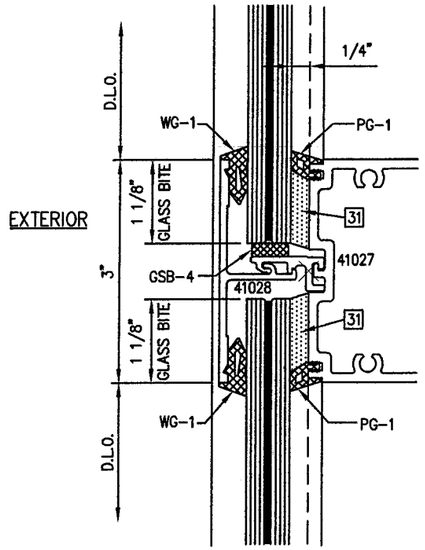

3/4 GLAZING DETAIL
9/16" CAPTURED GLASS
@ INTERMEDIATE HORIZONTAL

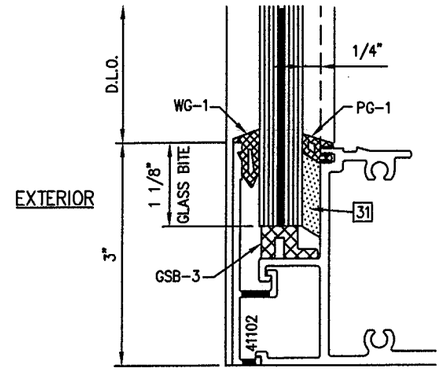

4/4 GLAZING DETAIL
9/16" CAPTURED GLASS
TYP. @ HEAD & SILL

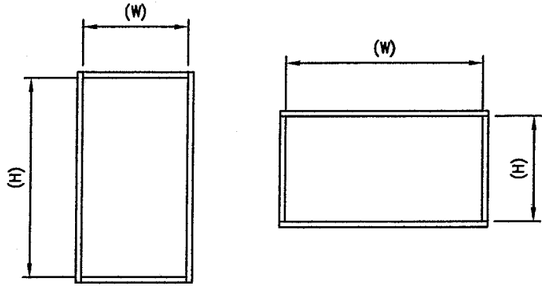

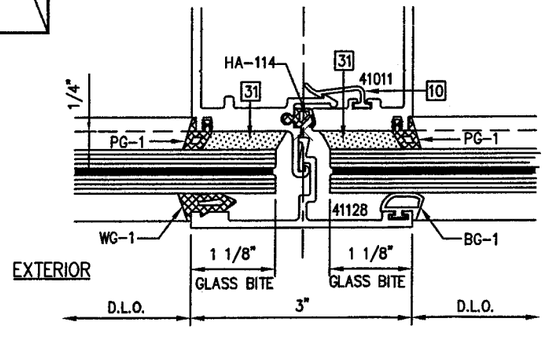

1/4 GLAZING DETAIL
9/16" CAPTURED GLASS
@ TYP. VERTICAL MULLION

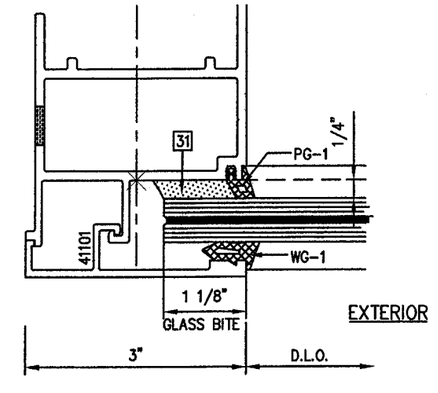

2/4 GLAZING DETAIL
9/16" CAPTURED GLASS
@ JAMB MULLION

FOR MIAMI-DADE CO. B.C.C.O.

Approved as complying with the Florida Building Code
Date MAY 20, 2009
NOA# 08-0915.09
Miami Dade Product Control Division
By Manuel Perez

enclos corp
2770 Blue Water Road
Eagan, MN 55121-1400
Tel. 651-796-6100 • Fax 651-994-6360
Engineering Locations
Eagan, MN • Montreal, QC, CA • Moncton, NB, CA
St. Louis, MO • Manila, PH

REVISIONS

1.	4/9/2009 REV'S PER M.D.B.C.C.O.

SEAL:

APR 28 2009

Reviewed For Structural Integrity Only

BROMLEY · COOK ENGINEERING, INC.
STRUCTURAL ENGINEERING SERVICES
5440 N.W. 33RD AVENUE SUITE 100
FORT LAUDERDALE, FLORIDA 33309
TEL: (954) 772-4624 FAX: (954) 772-4634
CERT. OF AUTH. #00009124
WILLIAM D. COOK P.E.
FLA P.E. # 43904
FLA S.I. # 2008

Date	Scale
7/31/08	

Drawing No.
5530-LM

Drawing Title
5530 SERIES WINDOW WALL
LARGE MISSILE IMPACT

Sheet No.
4/22

STRUCTURALLY GLAZED SYSTEM

MAX. DESIGN PRESSURES (P.S.F.) FOR VARIOUS GLASS TYPES

GLASS WD. D.L.O.	GLASS HGT. D.L.O.	GLASS TYPES (MONOLITHIC LAMINATED – L.M.I.)			
		◇A	◇At	◇Ct	◇N
42" 48" 52" 54" 57"	60"	+90, −90	+90, −90	+90, −90	+90 −90
42" 48" 52" 54" 57"	72"				+90, −90
42" 48" 52" 54" 57"	78"				
42" 48" 52" 54" 57"	84"				
42" 48" 52" 54" 57"	90"	+90, −90	+90, −90	+90, −90	

DOW CORNING 983 OR 995 STRUCTURAL SILICONE SEALANT
STRUCTURAL SILICONE BEAD [31] SHALL BE 7/8" x 1/4"

TESTED GLASS (MONOLITHIC):		
A	57" X 90"	+90 / −90
At	57" X 90"	+90 / −90
Ct	57" X 90"	+90 / −90
N	57" X 90"	+90 / −90

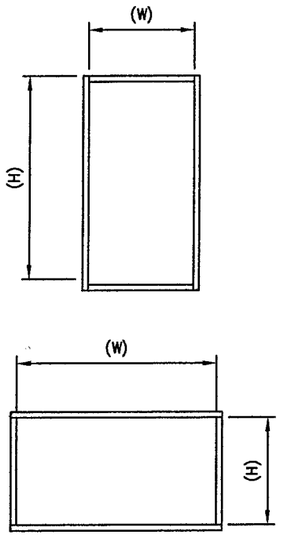

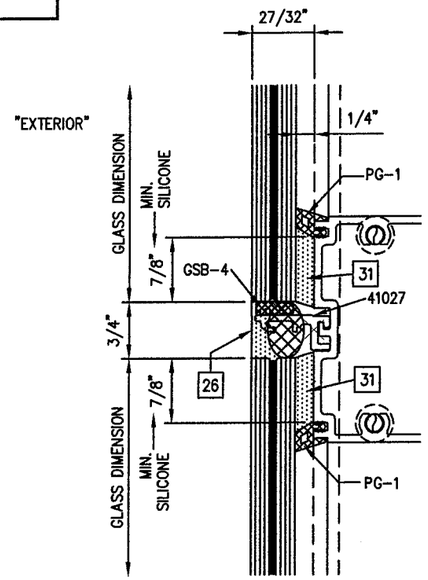

4/5 GLAZING DETAIL
9/16" STRUCTURAL GLAZED
❶ INTERMEDIATE HORIZONTAL

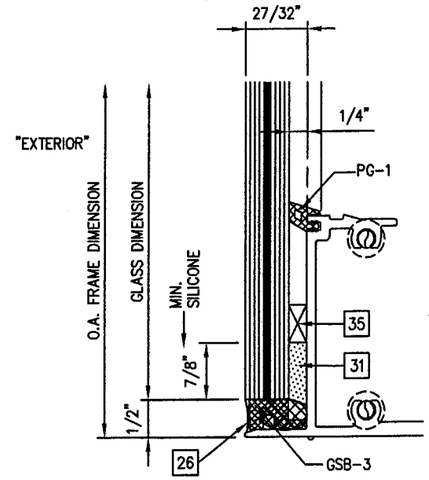

5/5 GLAZING DETAIL
9/16" STRUCTURAL GLAZED
❶ TYP. SILL

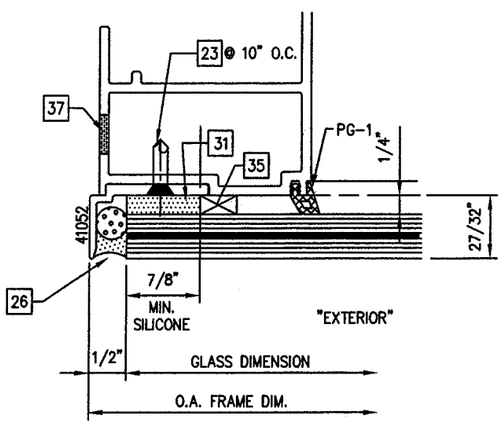

1/5 GLAZING DETAIL
9/16" STRUCTURAL GLAZED
❶ JAMB MULLION

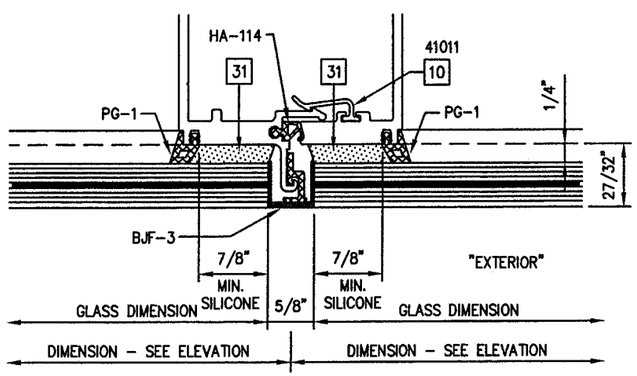

2/5 GLAZING DETAIL (BUTT JOINT W/ GASAKET)
9/16" STRUCTURAL GLAZED
❶ TYP. VERTICAL MULLION

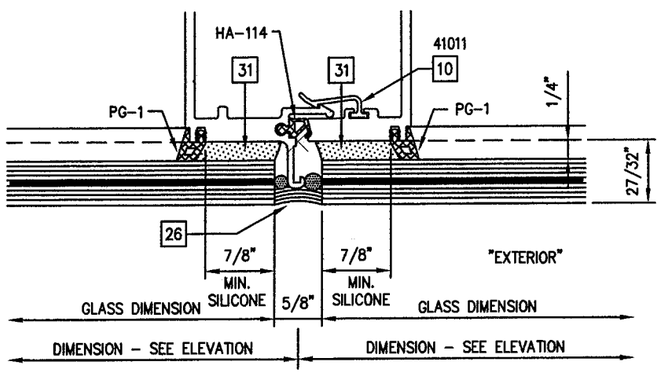

3/5 GLAZING DETAIL (SILICONE BUTT JOINT)
9/16" STRUCTURAL GLAZED
❶ TYP. VERTICAL MULLION

FOR MIAMI-DADE CO. B.C.C.O.

Approved as complying with the Florida Building Code
Date MAY 20, 2009
NOA# 08-0915.09
Miami-Dade Product Control Division
By Manuel Perez

enclos corp
2770 Blue Water Road
Eagan, MN 55121-1400
Tel. 651-796-6100 • Fax 651-994-6360
Engineering Locations
Eagan, MN • Montreal, QC, CA • Moncton, NB, CA
St. Louis, MO • Manila, PH

REVISIONS

1.	4/9/2009 REV'S PER M.D.B.C.C.O.

SEAL:

APR 2 8 2009
Reviewed For Structural Integrity Only

BROMLEY - COOK ENGINEERING, INC.
STRUCTURAL ENGINEERING SERVICES
5440 N.W. 33RD AVENUE SUITE 100
FORT LAUDERDALE, FLORIDA 33309
TEL: (954) 772-4624 FAX: (954) 772-4634
CERT. OF AUTH. #00009124
WILLIAM D. COOK P.E.
FLA P.E. # 43904
FLA S.I. # 2008

Date	Scale
7/31/08	

Drawing No.
5530-LM

Drawing Title
5530 SERIES WINDOW WALL
LARGE MISSILE IMPACT

Sheet No.
5/22

MAX. DESIGN PRESSURES (P.S.F.) FOR VARIOUS GLASS TYPES

GLASS WD. D.L.O.	GLASS HGT. D.L.O.	GLASS TYPES (LAMINATED/INSULATED – LARGE MISSILE IMPACT)	
		Bt	Dt
42" 48" 52" 54" 57"	60"	+110, −130	+110, −130
42" 48" 52" 54" 57"	72"		
42" 48" 52" 54" 57"	78"		
42" 48" 52" 54" 57"	84"		
42" 48" 52" 54" 57"	90"	+110, −130	+110, −130

TESTED GLASS (LAMINATED/INSULATED)

Bt & Dt	57" X 90"	+110 / −130

CAPTURED SYSTEM

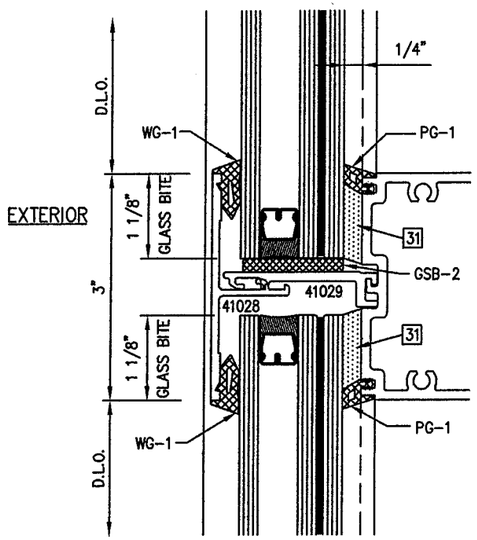

3/6 GLAZING DETAIL
1 3/8" CAPTURED GLASS
@ INTERMEDIATE HORIZONTAL

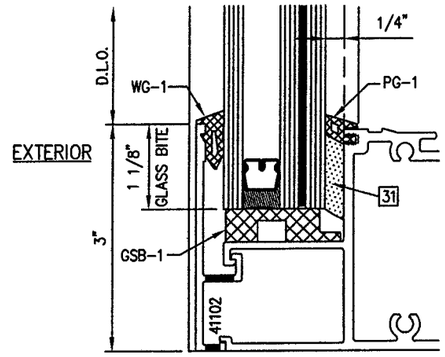

4/6 GLAZING DETAIL
1 3/8" CAPTURED GLASS
TYP. @ HEAD & SILL

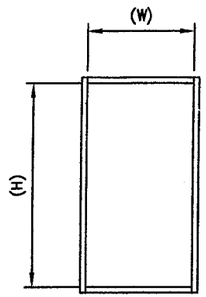

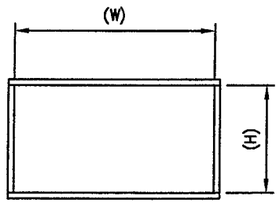

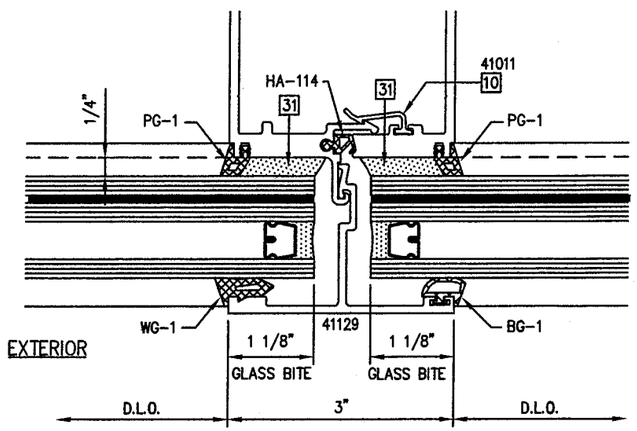

1/6 GLAZING DETAIL
1 3/8" CAPTURED GLASS
@ TYP. VERTICAL MULLION

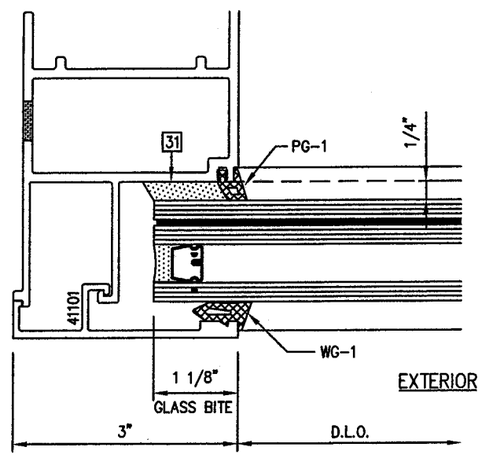

2/6 GLAZING DETAIL
1 3/8" CAPTURED GLASS
@ JAMB MULLION

FOR MIAMI-DADE CO. B.C.C.O.

Approved as complying with the Florida Building Code
Date MAY 20, 2009
NOA# 08-0915.09
Miami Dade Product Control Division
By Manuel Perez

enclos corp

2770 Blue Water Road
Eagan, MN 55121-1400
Tel. 651-796-6100 • Fax 651-994-6380

Engineering Locations
Eagan, MN • Montreal, QC, CA • Moncton, NB, CA
St. Louis, MO • Manila, PH

REVISIONS

1.	4/9/2009 REV'S PER M.D.B.C.C.O.

SEAL:

APR 28 2009

Reviewed For Structural Integrity Only

BROMLEY · COOK ENGINEERING, INC.
STRUCTURAL ENGINEERING SERVICES
5440 N.W. 33RD AVENUE SUITE 100
FORT LAUDERDALE, FLORIDA 33309
TEL: (954) 772-4624 FAX: (954) 772-4634
CERT. OF AUTH. #00009124
WILLIAM D. COOK P.E.
FLA P.E. # 43904
FLA S.I. # 2006

Date	Scale
7/31/08	

Drawing No.
5530-LM

Drawing Title
5530 SERIES WINDOW WALL
LARGE MISSILE IMPACT

Sheet No.
6/22

STRUCTURALLY GLAZED SYSTEM

MAX. DESIGN PRESSURES (P.S.F.) FOR VARIOUS GLASS TYPES

GLASS WD. D.L.O.	GLASS HGT. D.L.O.	GLASS TYPES (LAMINATED/INSULATED – LARGE MISSILE IMPACT)	
		Bt	Dt
42" 48" 52" 54" 57"	60"	+90, −90	+90, −90
42" 48" 52" 54" 57"	72"		
42" 48" 52" 54" 57"	78"		
42" 48" 52" 54" 57"	84"		
42" 48" 52" 54" 57"	90"	+90, −90	+90, −90

DOW CORNING 983 OR 995 STRUCTURAL SILICONE SEALANT
STRUCTURAL SILICONE BEAD [31] SHALL BE 7/8" x 1/4"

TESTED GLASS (INSULATED):		
Bt	57" X 90"	+90 / −90
Dt	57" X 90"	+90 / −90

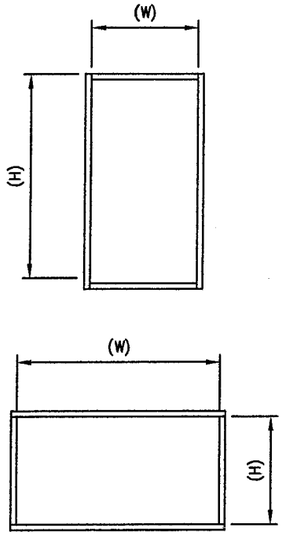

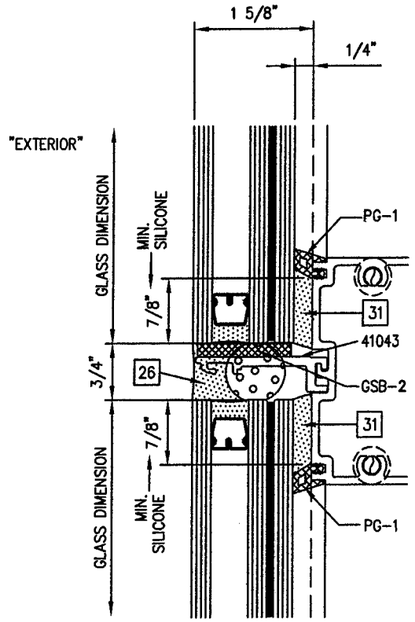

4/7 GLAZING DETAIL
1 3/8" STRUCTURAL GLAZED
● INTERMEDIATE HORIZONTAL

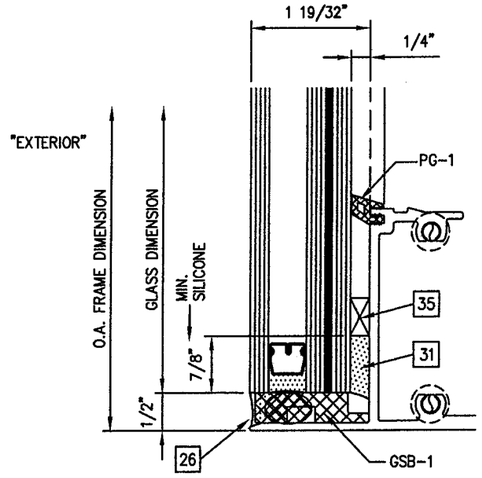

5/7 GLAZING DETAIL
1 3/8" STRUCTURAL GLAZED
● TYP. SILL

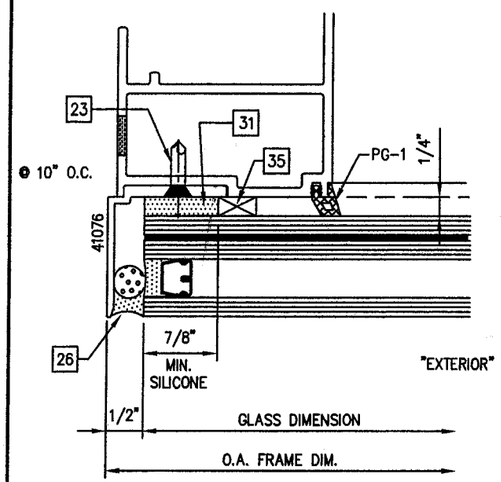

1/7 GLAZING DETAIL
1 3/8" STRUCTURAL GLAZED
● JAMB

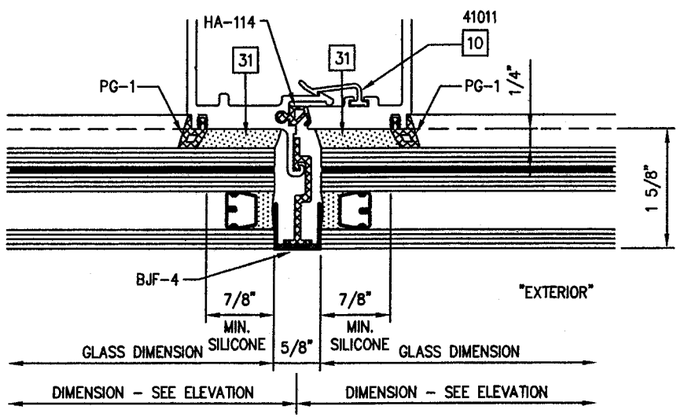

2/7 GLAZING DETAIL (BUTT JOINT W/ GALSKET)
1 3/8" STRUCTURAL GLAZED
● TYPICAL VERTICAL MULLION

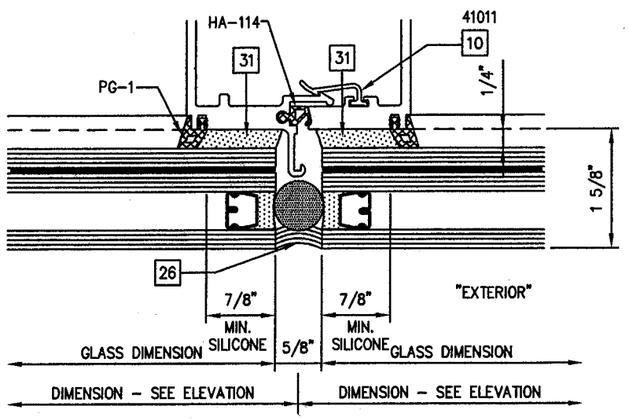

3/7 GLAZING DETAIL (SILICONE BUTT JOINT)
1 3/8" STRUCTURAL GLAZED
● TYYPICAL VERTICAL MULLION

FOR MIAMI-DADE CO. B.C.C.O.

Approved as complying with the Florida Building Code
Date MAY 20 2009
NOA# 08-0915.09
Miami Dade Product Control Division
By Manuel Perez

enclos corp
2770 Blue Water Road
Eagan, MN 55121-1400
Tel. 651-796-6100 • Fax 651-994-6360
Engineering Locations
Eagan, MN • Montreal, QC, CA • Moncton, NB, CA
St. Louis, MO • Manila, PH

REVISIONS

1.	4/9/2009 REV'S PER M.D.B.C.C.O.

SEAL:

APR 2 8 2009
Reviewed For Structural Integrity Only

BROMLEY · COOK ENGINEERING, INC.
STRUCTURAL ENGINEERING SERVICES
5440 N.W. 33RD AVENUE SUITE 100
FORT LAUDERDALE, FLORIDA 33309
TEL: (954) 772-4624 FAX: (954) 772-4634
CERT. OF AUTH. #00009124
WILLIAM D. COOK P.E.
FLA P.E. # 43904
FLA S.I. # 2008

Date	Scale
7/31/08	

Drawing No.
5530-LM

Drawing Title
5530 SERIES WINDOW WALL
LARGE MISSILE IMPACT

Sheet No.
7/22

MAX. DESIGN PRESSURES (P.S.F.) FOR VARIOUS MULLION OPTIONS

MODULE WD. "W"	MULLION HGT. "H"	MULLION OPTIONS					
		MULLION TYPE #1	MULLION TYPE #2	MULLION TYPE #3	JAMB TYPE #4	JAMB TYPE #5	JAMB TYPE #6
42" 48" 52" 54" 60" * 71"	60"	+90, −143 / +90, −143	+90, −143 / +90, −143	+90, −143 / +90, −143	+90, −143 / +90, −143	+90, −143 / +90, −143	+90, −143 / +90, −143
42" 48" 52" 54" 60" * 71"	72"	+110, −130	+90, −90	+90, −90	+110, −130	+90, −90	+90, −90
42" 48" 52" 54" 60" * 71"	84"						
42" 48" 52" 54" 60" * 71"	90"						
42" 48" 52" 54" 60" * 71"	96"			+90, −90			+90, −90
42" 48" 52" 54" 60" * 71"	112"						
42" 48" 52" 54" 60" * 71"	120"	+110, −130 / +110, −110	+90, −90 / +75, −75		+110, −130	+90, −90	

* NOTE: 71" MODULE IS ONLY FOR A SPAN WITH A DOOR

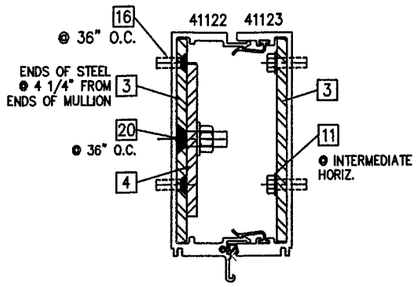

MULLION TYPE #1

41122/41123 (W/ STL. REINFORCING)
1/4" X 5" STEEL BAR (2 PCS.) &
1/4" X 4" STEEL BAR (1 PCS.)

ALUMINUM Ixx = 12.828 in^4

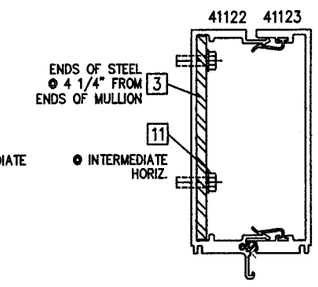

MULLION TYPE #2

41122/41123 (W/ STL. REINFORCING)
1/4" X 5" STEEL BAR (1 PC.)

ALUMINUM Ixx = 12.828 in^4

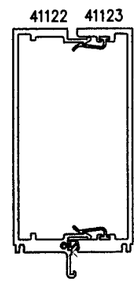

MULLION TYPE #3

NO REINFORCING

ALUMINUM Ixx = 12.828 in^4

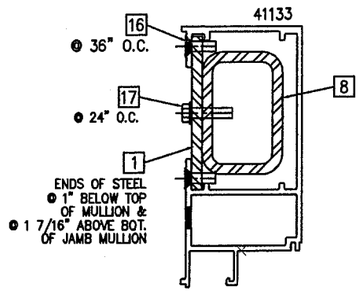

JAMB TYPE #4

41133 (W/ STL. REINFORCING)
1/4" X 3 3/4" STEEL BAR (1 PCS.) &
2" x 3" X 1/4" STEEL TUBE (1 PCS.)

ALUMINUM Ixx = 11.028 in^4

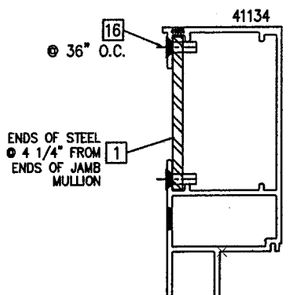

JAMB TYPE #5

41134 (W/ STL. REINFORCING)
1/4" X 3 3/4" STEEL BAR (1 PCS.)

ALUMINUM Ixx = 13.829 in^4

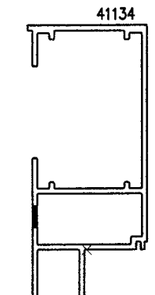

JAMB TYPE #6

41134 (NO STL. REINFORCING)

ALUMINUM Ixx = 13.829 in^4

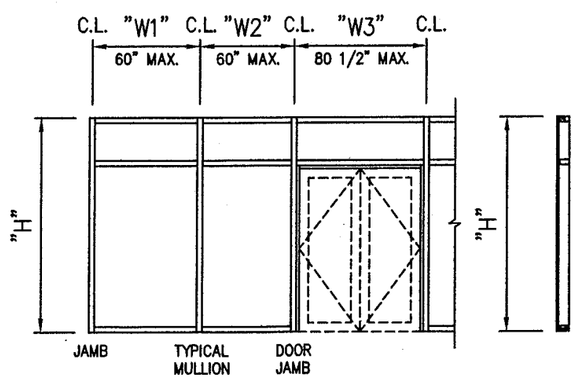

GENERAL NOTES:

- "H" = MAXIMUM MULLION SPAN
- "W1", "W2" & "W3" = C.L. TO C.L. SPACING
- JAMB "W" = $\frac{\text{"W1"}}{2}$
- MULLION "W" = $\frac{\text{"W1"} + \text{"W2"}}{2}$
- DOOR JAMB "W" = $\frac{\text{"W2"} + \text{"W3"}}{2}$
- FOR SINGLE SPAN MAXIMUM DEFL. = L/180 OR 1"
- WHEN STEEL REINF. IS USED, LENGTH OF STEEL SHALL BE MULLION LENGTH MINUS (−) 9" (CENTERED IN SPAN)
- SPANS ARE LIMITED BY MAXIMUM TESTED END REACTIONS

FOR MIAMI-DADE CO. B.C.C.O.

Approved as complying with the Florida Building Code
Date MAY 20, 2009
NOA# 08-0915.09
Miami Dade Product Control Division
By Manuel Perez

enclos corp

2770 Blue Water Road
Eagan, MN 55121-1400
Tel. 651-796-6100 • Fax 651-994-6360
Engineering Locations
Eagan, MN • Montreal, QC, CA • Moncton, NB, CA
St. Louis, MO • Manila, PH

REVISIONS

1.	4/9/2009 REV'S PER M.D.B.C.C.O.

SEAL:

APR 2 8 2009
Reviewed For Structural Integrity Only

BROMLEY · COOK ENGINEERING, INC.
STRUCTURAL ENGINEERING SERVICES
5440 N.W. 33RD AVENUE SUITE 100
FORT LAUDERDALE, FLORIDA 33309
TEL: (954) 772-4624 FAX: (954) 772-4634
CERT. OF AUTH. #00009124
WILLIAM D. COOK P.E.
FLA P.E. # 43904
FLA S.I. # 2008

Date	Scale
7/31/08	

Drawing No.
5530-LM

Drawing Title
5530 SERIES WINDOW WALL
LARGE MISSILE IMPACT

Sheet No.
8/22

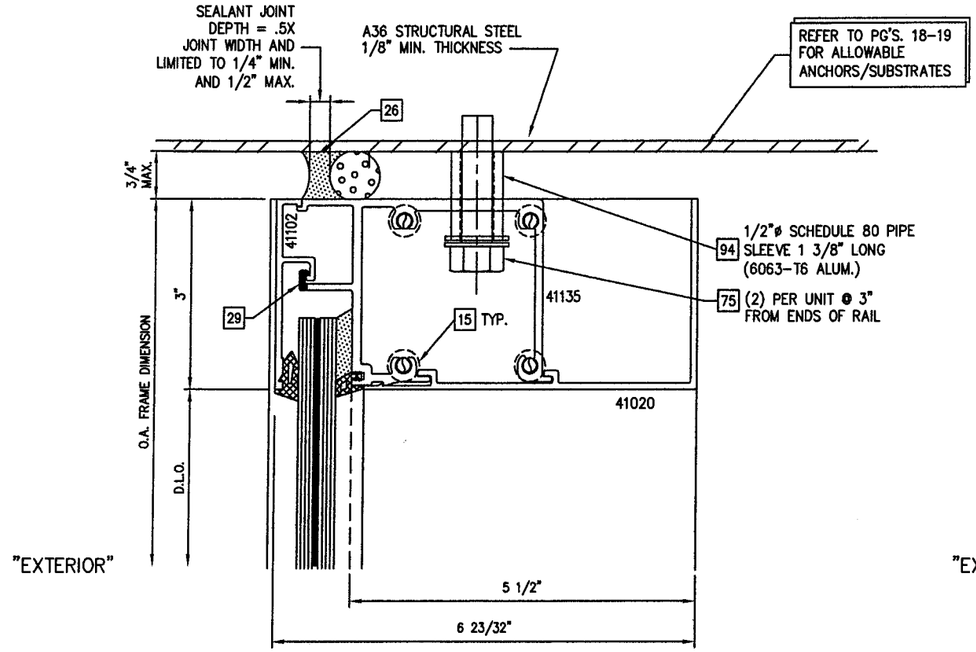

1/9 HEAD DETAIL – 9/16" GLASS
WITH THRU-CAN ANCHOR OPTION

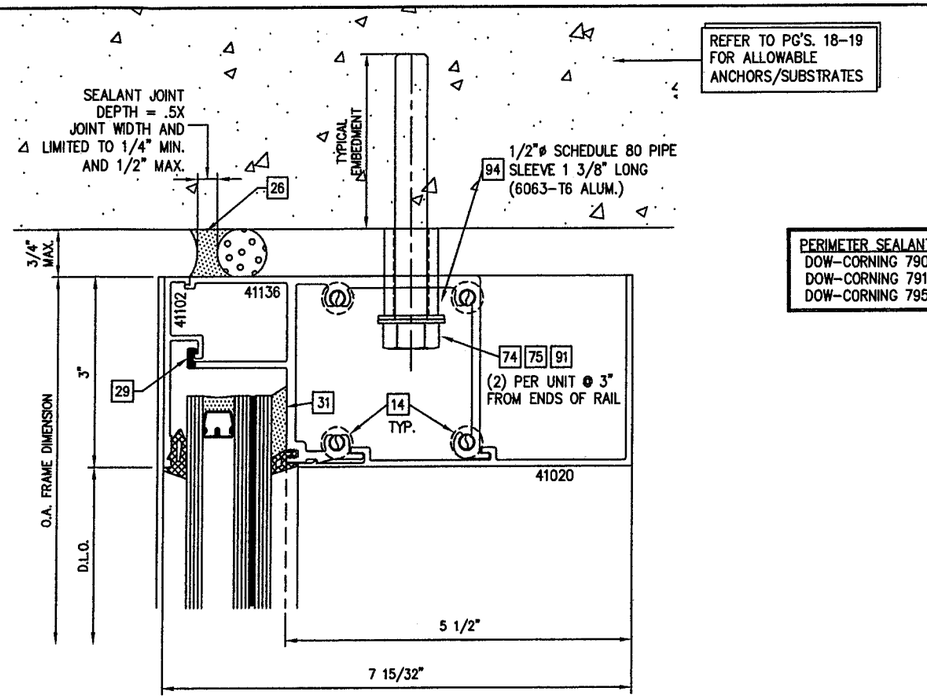

3/9 HEAD DETAIL – 1 3/8" CAPTURED GLASS
WITH THRU-CAN ANCHOR OPTION

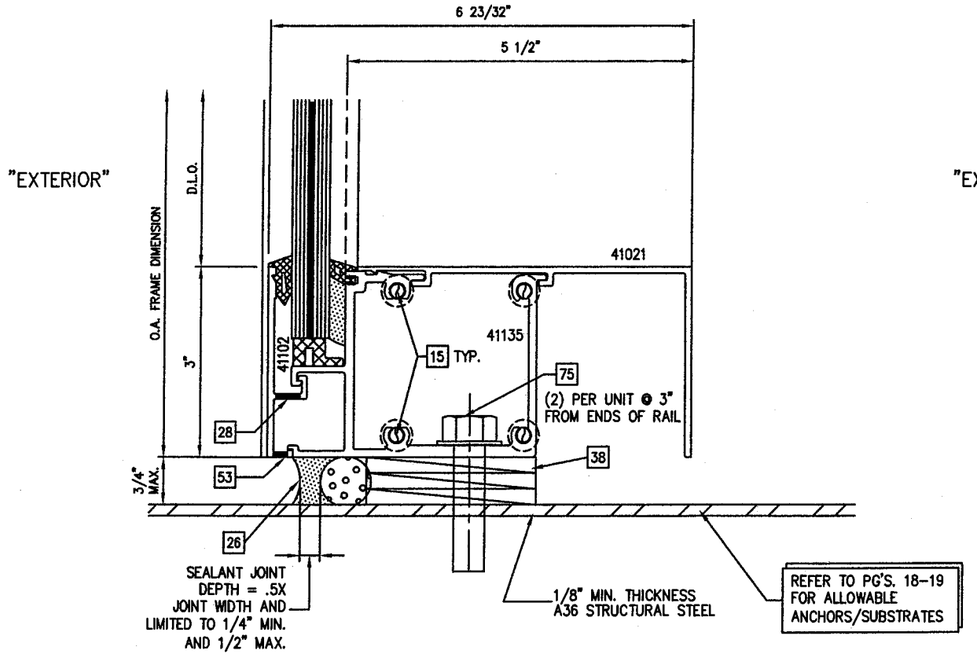

2/9 SILL DETAIL – 9/16" GLASS
WITH THRU-CAN ANCHOR OPTION

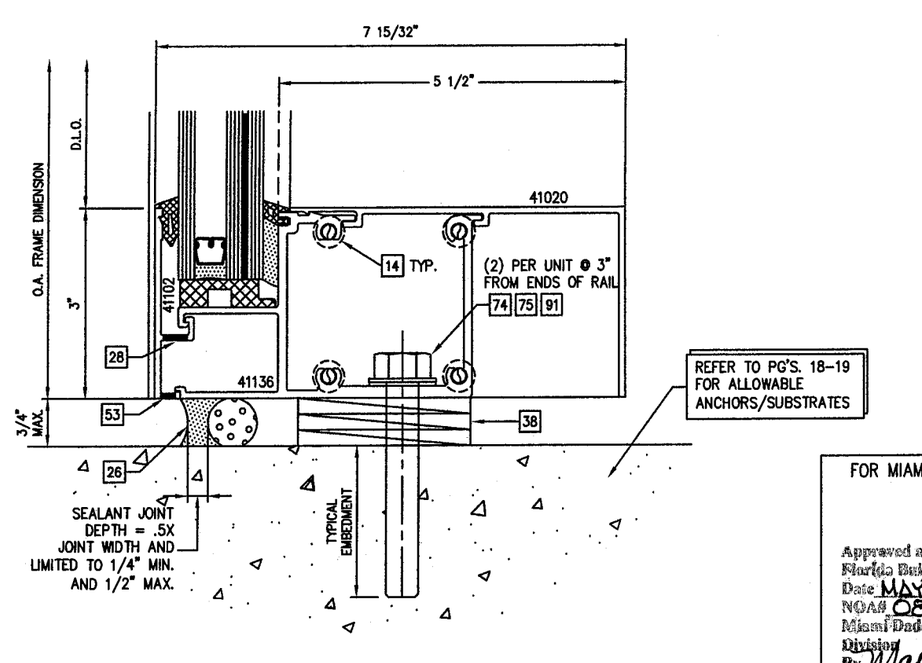

4/9 SILL DETAIL – 1 3/8" CAPTURED GLASS
WITH THRU-CAN ANCHOR OPTION

PERIMETER SEALANT OPTIONS:
DOW-CORNING 790 SILICONE
DOW-CORNING 791 SILICONE
DOW-CORNING 795 SILICONE

FOR MIAMI-DADE CO. B.C.C.O.

Approved as complying with the Florida Building Code
Date MAY 20, 2009
NOA# 08-0915.09
Miami-Dade Product Control Division
By Manuel Perez

enclos corp
2770 Blue Water Road
Eagan, MN 55121-1400
Tel. 651-796-6100 • Fax 651-994-6300
Engineering Locations
Eagan, MN • Montreal, QC, CA • Moncton, NB, CA
St. Louis, MO • Manilla, PH

REVISIONS

1.	4/9/2009 REV'S PER M.D.B.C.C.O.

SEAL:
APR 28 2009
Reviewed For Structural Integrity Only

BROMLEY · COOK ENGINEERING, INC.
STRUCTURAL ENGINEERING SERVICES
5440 N.W. 33RD AVENUE SUITE 100
FORT LAUDERDALE, FLORIDA 33309
TEL: (954) 772-4624 FAX: (954) 772-4634
CERT. OF AUTH. #00009124
WILLIAM D. COOK P.E.
FLA. P.E. # 43904
FLA S.I. # 2008

Date	Scale
7/31/08	

Drawing No.
5530-LM

Drawing Title
5530 SERIES WINDOW WALL
LARGE MISSILE IMPACT

Sheet No.
9/22

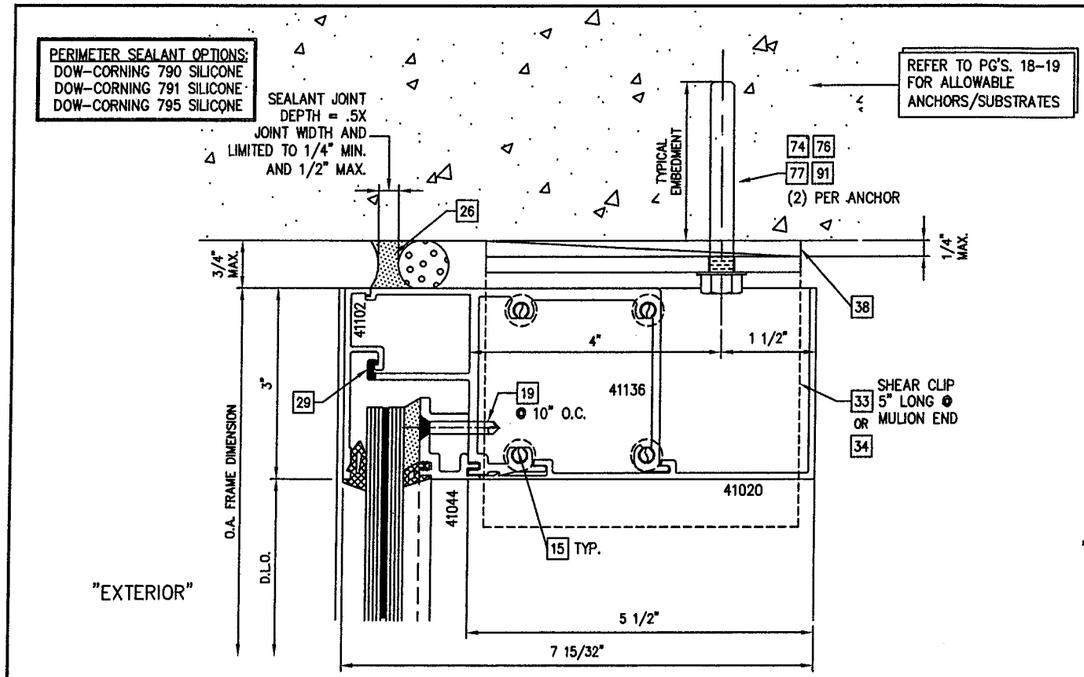

1/10 HEAD DETAIL – 9/16" CAPTURED GLASS W/INLAY
WITH SHEAR CLIP ANCHOR OPTION

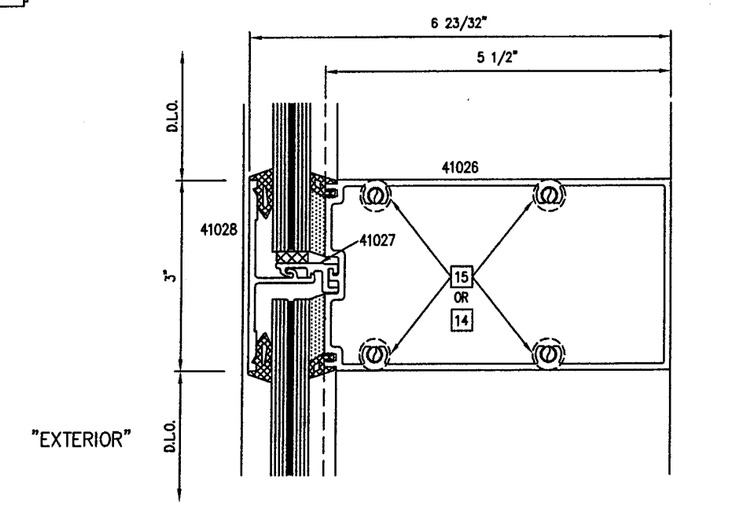

3/10 INTERMEDIATE HORIZ. DETAIL – 9/16" GLASS

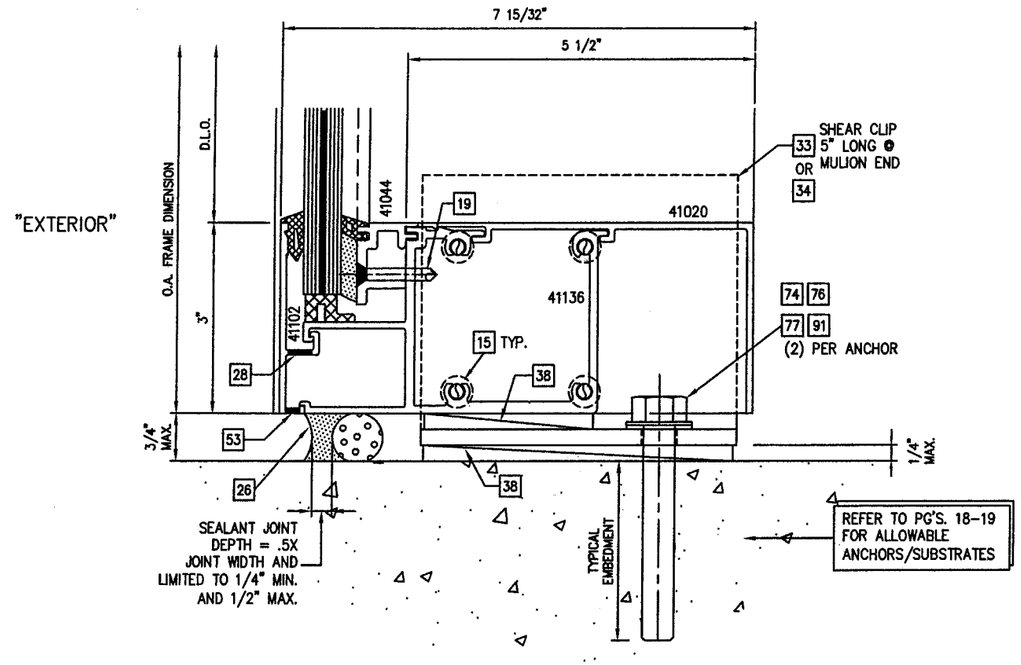

2/10 SILL DETAIL – 9/16" CAPTURED GLASS W/INLAY
WITH SHEAR CLIP ANCHOR OPTION

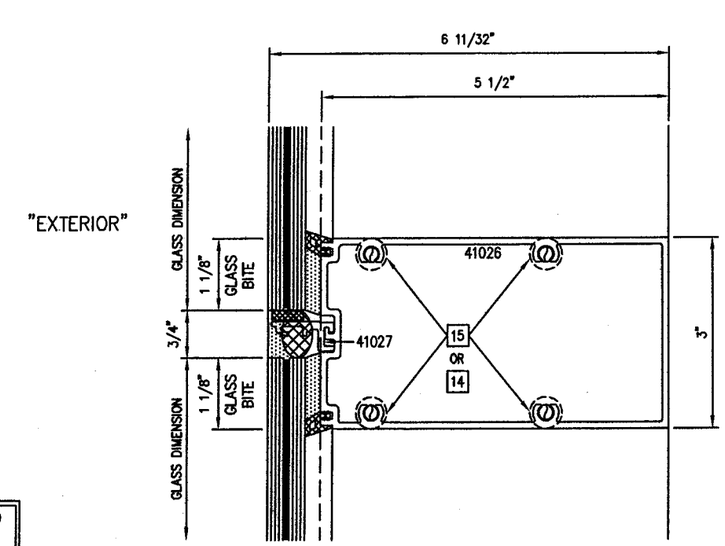

4/10 INTERMEDIATE RAIL DETAIL – 9/16" GLASS

FOR MIAMI-DADE CO. B.C.C.O.

Approved as complying with the Florida Building Code
Date MAY 20 2009
NOA# 08-0915.09
Miami-Dade Product Control Division
By Manuel Perez

enclos corp

2770 Blue Water Road
Eagan, MN 55121-1400
Tel. 651-796-6100 • Fax 651-994-6360

Engineering Locations
Eagan, MN • Montreal, QC, CA • Moncton, NB, CA
St. Louis, MO • Manila, PH

REVISIONS

1.	4/9/2009 REV'S PER M.D.B.C.C.O.

SEAL:

APR 28 2009

Reviewed For Structural Integrity Only

BROMLEY • COOK ENGINEERING, INC.
STRUCTURAL ENGINEERING SERVICES
5440 N.W. 33RD AVENUE SUITE 100
FORT LAUDERDALE, FLORIDA 33309
TEL: (954) 772-4624 FAX: (954) 772-4634
CERT. OF AUTH. #00009124
WILLIAM D. COOK P.E.
FLA P.E. # 43904
FLA S.I. # 2008

Date	Scale
7/31/08	

Drawing No.
5530-LM

Drawing Title
5530 SERIES WINDOW WALL
LARGE MISSILE IMPACT

Sheet No.
10/22

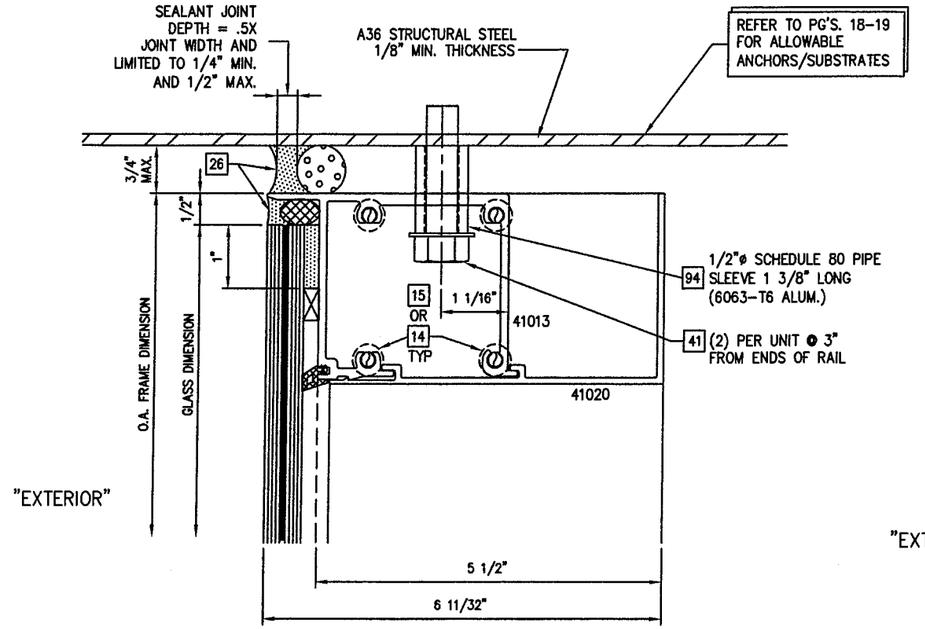

1/11 HEAD DETAIL – 9/16" STRUCTURAL GLAZED GLASS
WITH THRU-CAN ANCHOR OPTION

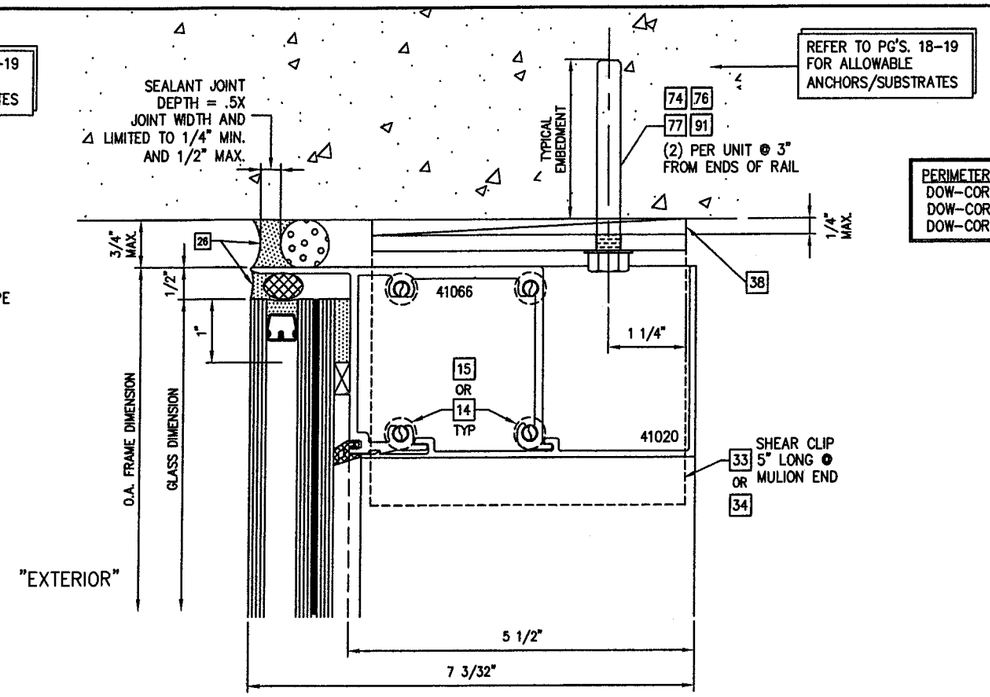

3/11 HEAD DETAIL – 1 3/8" STRUCTURAL GLAZED GLASS
WITH SHEAR CLIP ANCHOR OPTION

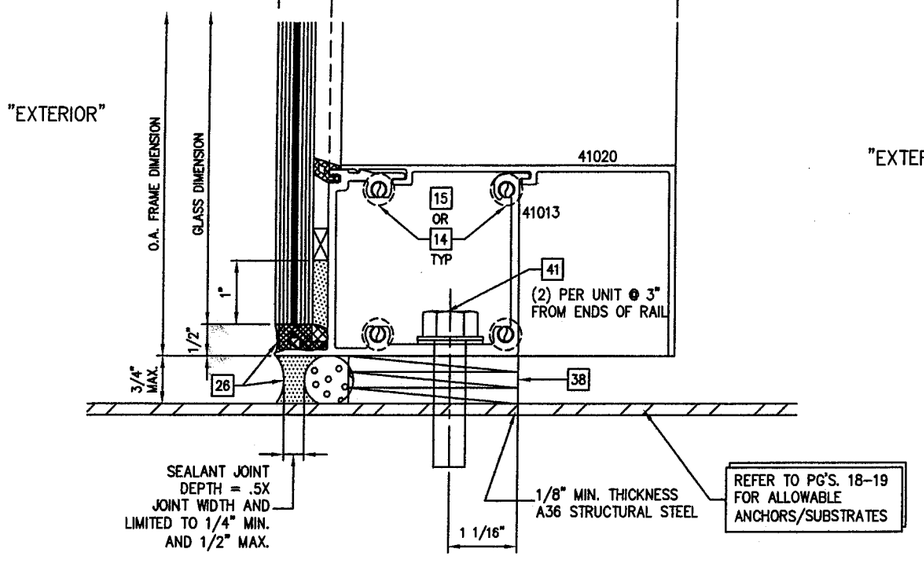

2/11 SILL DETAIL – 9/16" STRUCTURAL GLAZED GLASS
WITH THRU-CAN ANCHOR OPTION

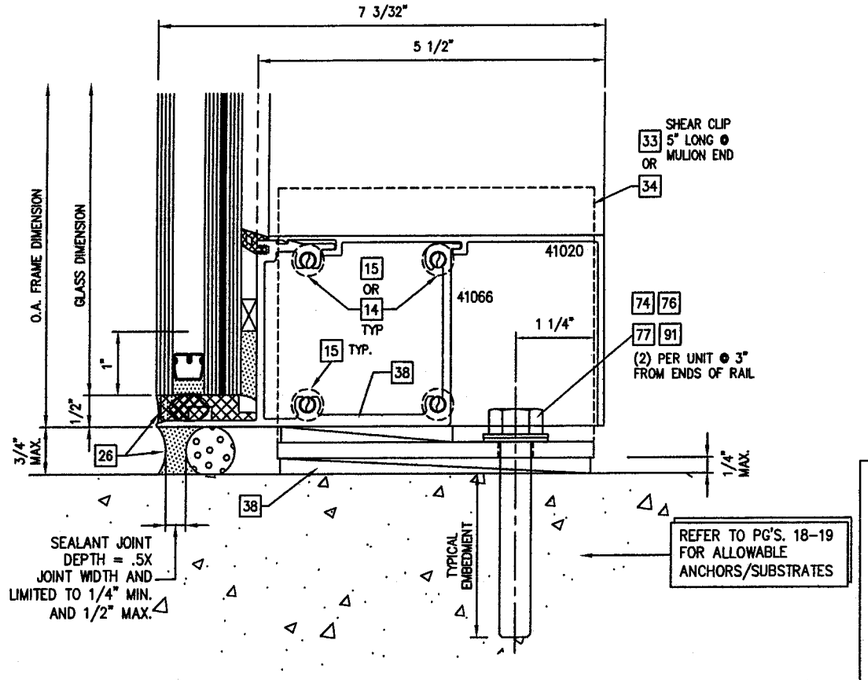

4/11 SILL DETAIL – 1 3/8" STRUCTURAL GLAZED GLASS
WITH SHEAR CLIP ANCHOR OPTION

PERIMETER SEALANT OPTIONS:
DOW-CORNING 790 SILICONE
DOW-CORNING 791 SILICONE
DOW-CORNING 795 SILICONE

FOR MIAMI-DADE CO. B.C.C.O.

Approved as complying with the Florida Building Code
Date MAY 20, 2009
NOA# 08-0912.09
Miami-Dade Product Control Division
By Manuel Perez

enclos corp
2770 Blue Water Road
Eagan, MN 55121-1400
Tel. 651-796-6100 • Fax 651-994-6360
Engineering Locations
Eagan, MN • Montreal, QC, CA • Moncton, NB, CA
St. Louis, MO • Manila, PH

REVISIONS

1	4/9/2009 REV'S PER M.D.B.C.C.O.

SEAL:

APR 2 8 2009

Reviewed For Structural Integrity Only

BROMLEY - COOK ENGINEERING, INC.
STRUCTURAL ENGINEERING SERVICES
5440 N.W. 33RD AVENUE SUITE 100
FORT LAUDERDALE, FLORIDA 33309
TEL: (954) 772-4624 FAX: (954) 772-4634
CERT. OF AUTH. #00009124
WILLIAM D. COOK P.E.
FLA P.E. # 43904
FLA S.I. # 2008

Date	Scale
7/31/08	

Drawing No.
5530-LM

Drawing Title
5530 SERIES WINDOW WALL
LARGE MISSILE IMPACT

Sheet No.
11/22

PERIMETER SEALANT OPTIONS:
DOW-CORNING 790 SILICONE
DOW-CORNING 791 SILICONE
DOW-CORNING 795 SILICONE

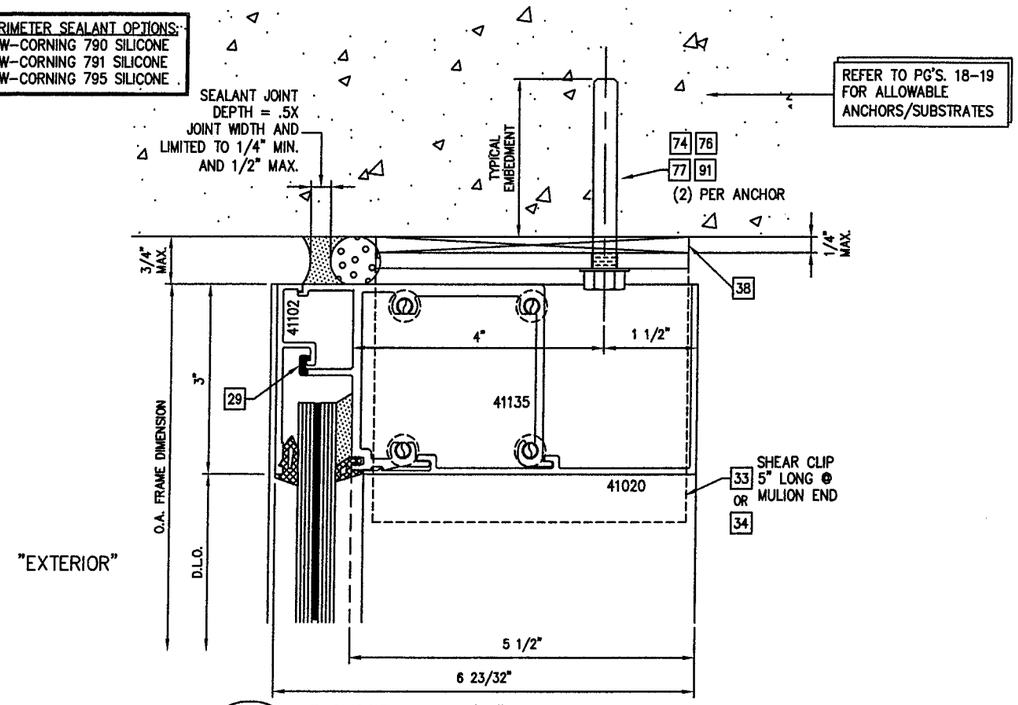

1/12 HEAD DETAIL – 9/16" GLASS
WITH SHEAR CLIP ANCHOR OPTION

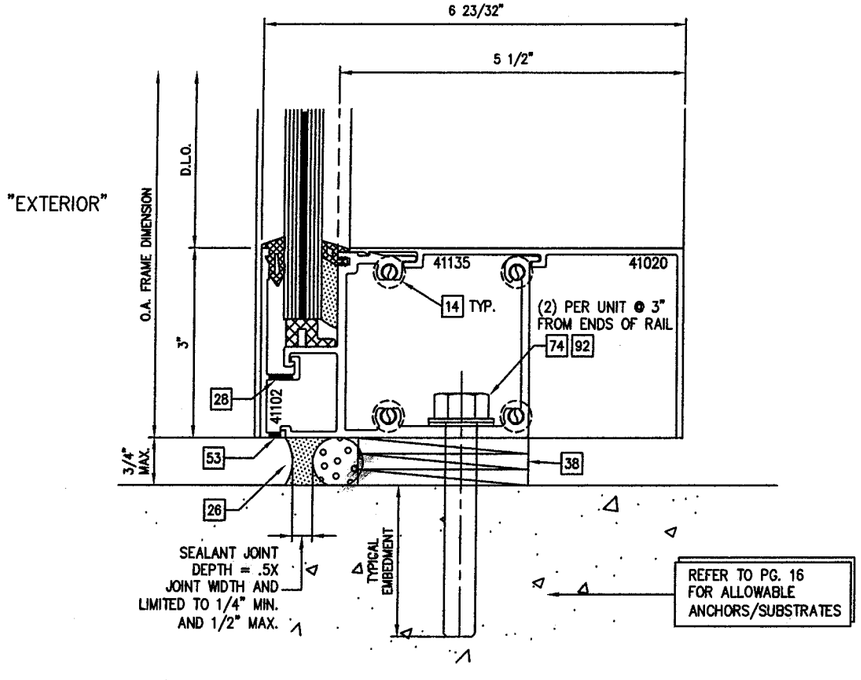

2/12 SILL DETAIL – 9/16" GLASS
WITH THRU-CAN ANCHOR OPTION

"EXTERIOR"

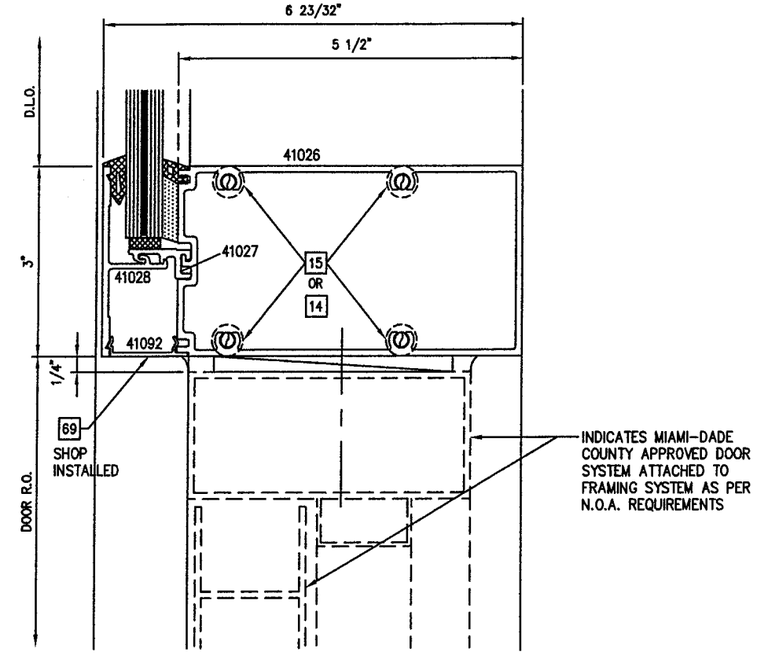

3/12 INTERMEDIATE HORIZ. DETAIL
9/16" CAPTURED GLASS @ DOOR

"EXTERIOR"

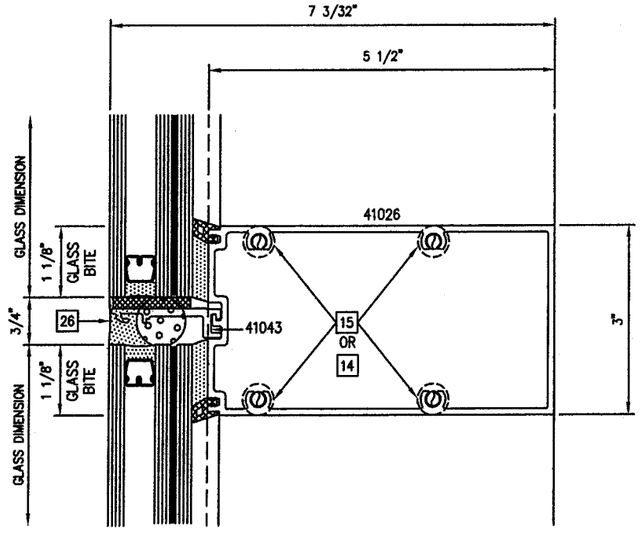

4/12 INTERMEDIATE RAIL DETAIL – 1 3/8" GLASS

FOR MIAMI-DADE CO. B.C.C.O.

Approved as complying with the Florida Building Code
Date MAY 20, 2009
NOA# 08-0915.04
Miami Dade Product Control Division
By Manuel Perez

enclos corp
2770 Blue Water Road
Eagan, MN 55121-1400
Tel. 651-796-6100 • Fax 651-994-6360
Engineering Locations
Eagan, MN • Montreal, QC, CA • Moncton, NB, CA
St. Louis, MO • Manila, PH

REVISIONS

1.	4/9/2009 REV'S PER M.D.B.C.C.O.

SEAL:

APR 28 2009
Reviewed For Structural Integrity Only

BROMLEY · COOK ENGINEERING, INC.
STRUCTURAL ENGINEERING SERVICES
5440 N.W. 33RD AVENUE SUITE 100
FORT LAUDERDALE, FLORIDA 33309
TEL: (954) 772-4624 FAX: (954) 772-4634
CERT. OF AUTH. #00009124
WILLIAM D. COOK P.E.
FLA P.E. # 43304
FLA S.I. # 2008

Date	Scale
7/31/08	

Drawing No.
5530-LM

Drawing Title
5530 SERIES WINDOW WALL
LARGE MISSILE IMPACT

Sheet No.
12/22

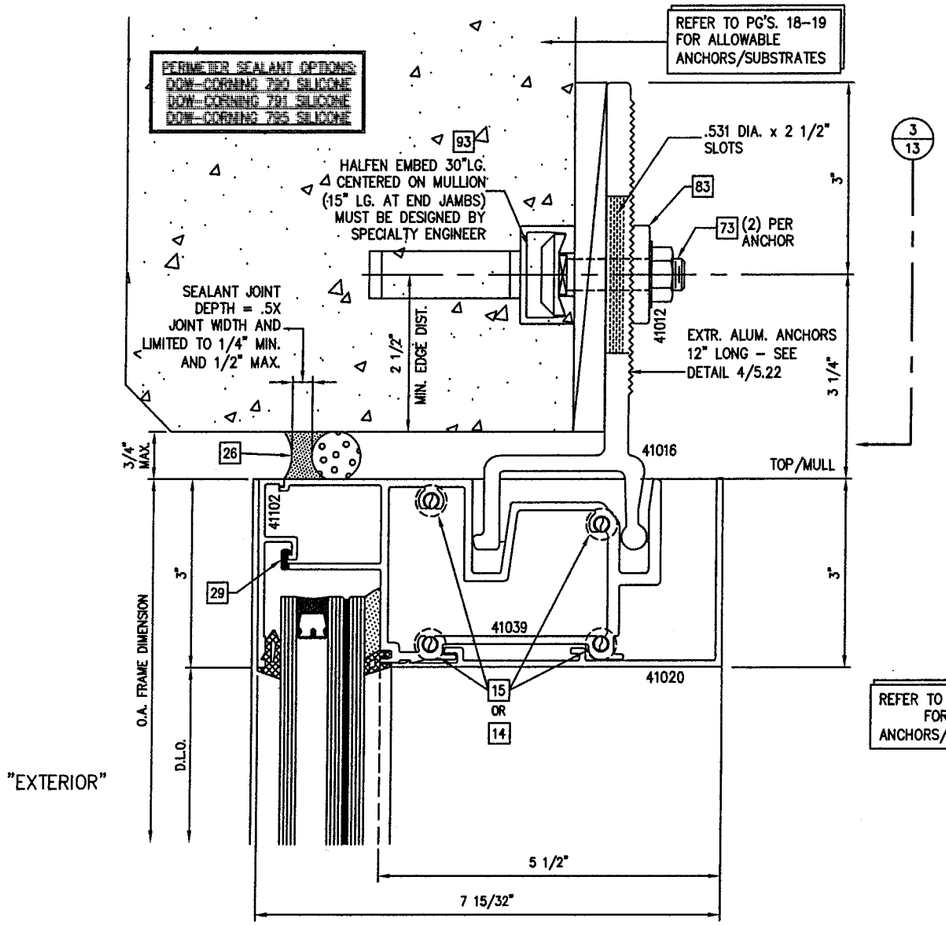

1/13 HEAD DETAIL - 1 3/8" GLASS
PRECAST ANCHOR W/ HALFEN EMBED

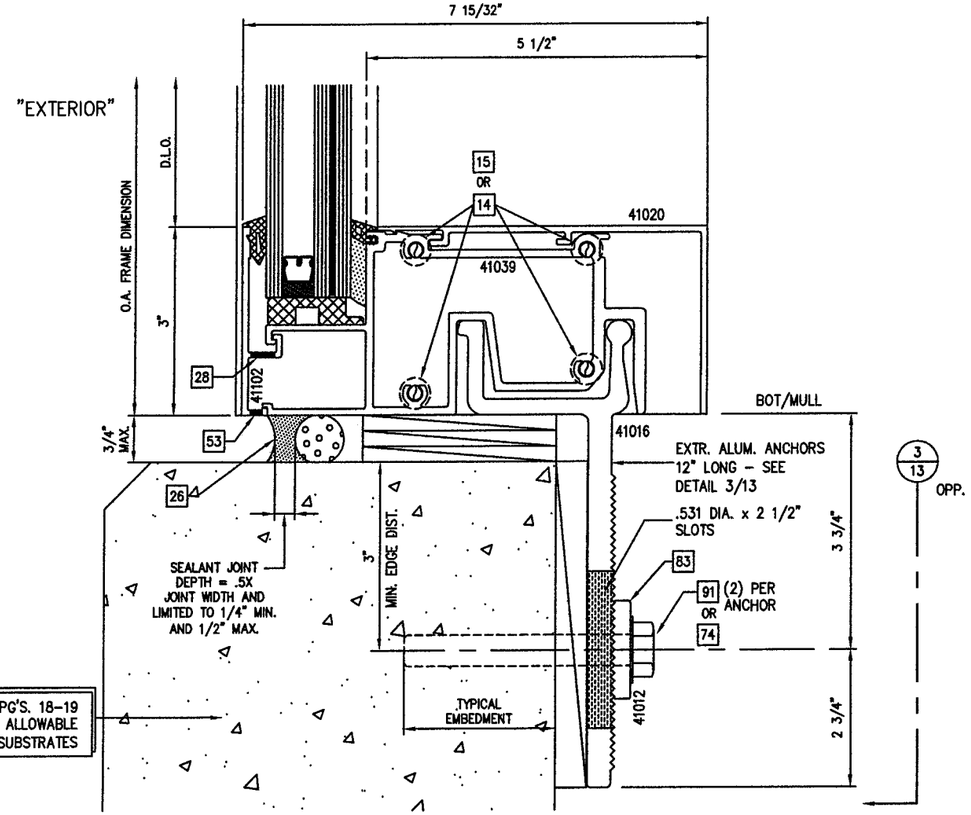

2/13 SILL DETAIL - 1 3/8" GLASS
PRECAST ANCHOR W/ WEDGE BOLT

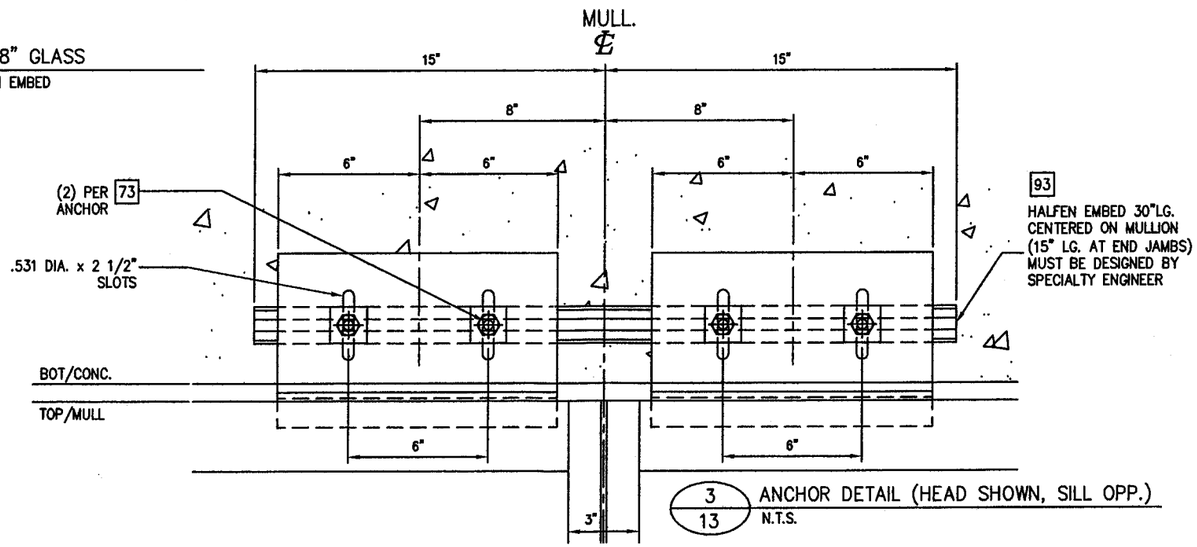

3/13 ANCHOR DETAIL (HEAD SHOWN, SILL OPP.)
N.T.S.

FOR MIAMI-DADE CO. B.C.C.O.

Approved as complying with the Florida Building Code
Date: MAY 20 2009
NOA# 08-0915.09
Miami Dade Product Control Division
By: Manuel Perez

enclos corp
2770 Blue Water Road
Eagan, MN 55121-1400
Tel. 651-796-6100 • Fax 651-994-6580
Engineering Locations
Eagan, MN • Montreal, QC, CA • Moncton, NB, CA
St. Louis, MO • Manila, PH

REVISIONS

1.	4/9/2009 REV'S PER M.D.B.C.C.O.

SEAL:

APR 28 2009
Reviewed For Structural Integrity Only

BROMLEY - COOK ENGINEERING, INC.
STRUCTURAL ENGINEERING SERVICES
5440 N.W. 33RD AVENUE SUITE 100
FORT LAUDERDALE, FLORIDA 33309
TEL: (954) 772-4624 FAX: (954) 772-4634
CERT. OF AUTH. #00009124
WILLIAM D. COOK P.E.
FLA P.E. # 43504
FLA SI. # 2008

Date	Scale
7/31/08	

Drawing No.
5530-LM

Drawing Title
5530 SERIES WINDOW WALL
LARGE MISSILE IMPACT

Sheet No.
13/22

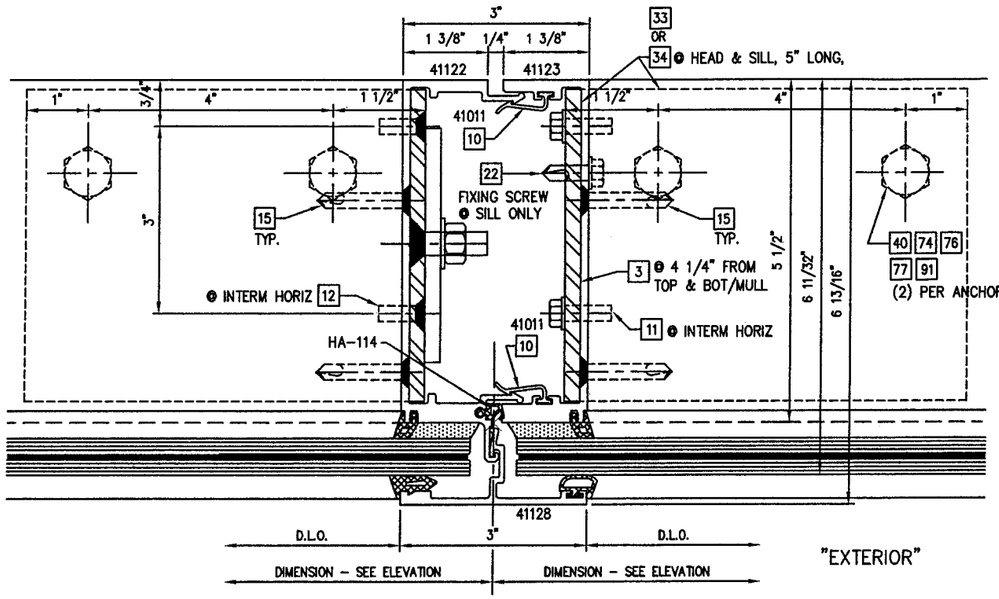

SEE PAGES 18–19 FOR ALLOWABLE SUBSTRATES/ ANCHORAGE DETAILS

1/14 VERTICAL MULLION DETAIL – 9/16" CAPTURED GLASS
WITH SHEAR CLIP ANCHOR OPTION

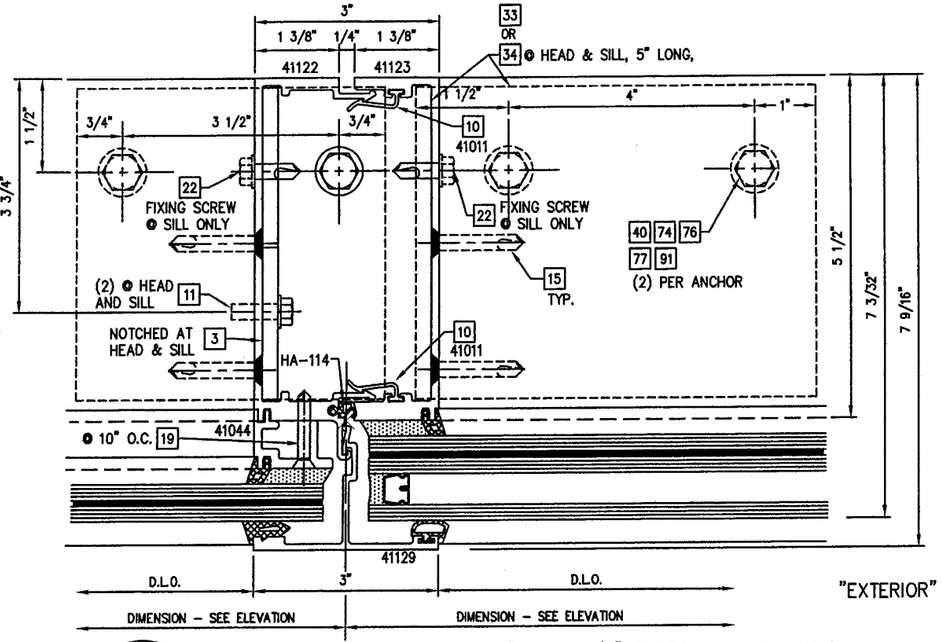

3/14 VERTICAL MULLION DETAIL – 9/16" TO 1 3/8" GLASS @ HEAD & SILL
WITH SHEAR CLIP ANCHOR OPTION

JAMB SEALANT NOTES:

PERIMETER SEALANT OPTIONS:
DOW-CORNING 790 SILICONE
DOW-CORNING 791 SILICONE
DOW-CORNING 795 SILICONE

ALTERNATE SEALANTS AND JAMB GAPS:
TO BE APPROVED BY DESIGN PROFESSIONAL OF RECORD AND SEALANT MANUFACTURER.

SEE MULLION CHART ON PAGE 8 FOR MULLION REINFORCING OPTIONS

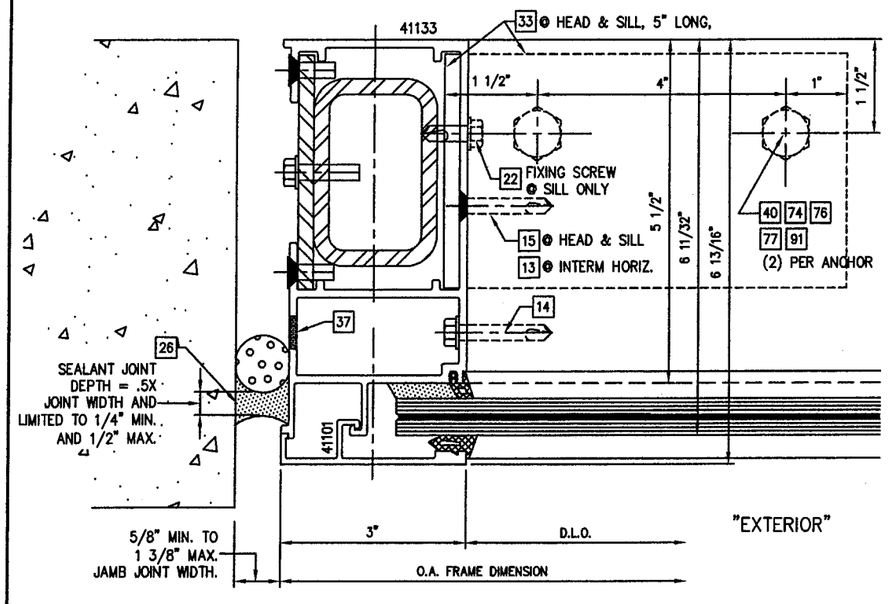

2/14 VERTICAL END JAMB DETAIL – 9/16" CAPTURED GLASS
WITH SHEAR CLIP ANCHOR OPTION

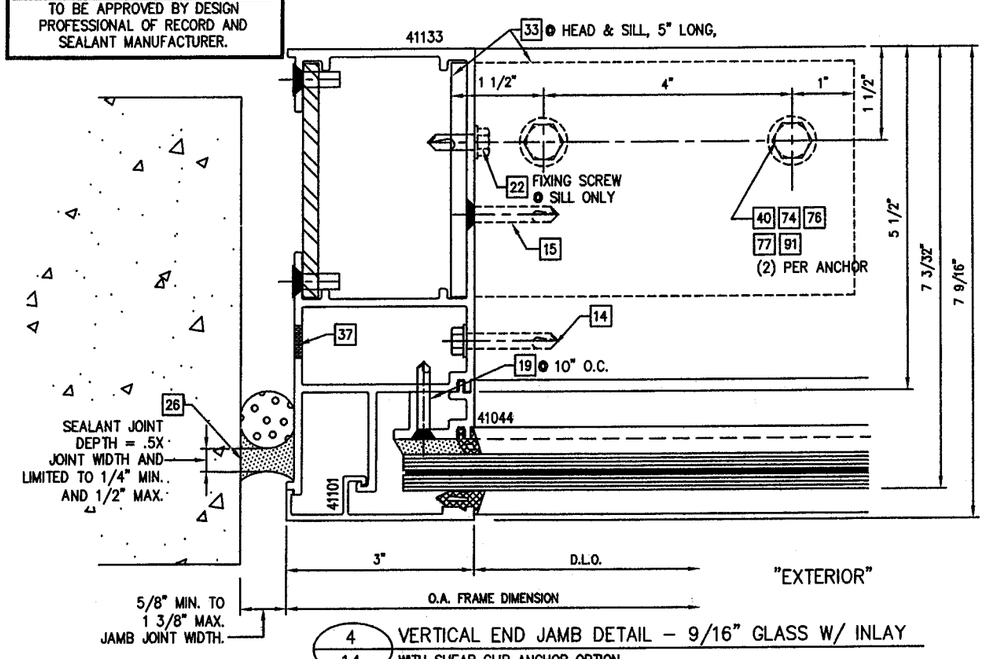

4/14 VERTICAL END JAMB DETAIL – 9/16" GLASS W/ INLAY
WITH SHEAR CLIP ANCHOR OPTION

FOR MIAMI-DADE CO. B.C.C.O.

Approved as complying with the Florida Building Code
Date MAY 20, 2009
NOA# 08-0915.09
Miami-Dade Product Control Division
By Manuel Perez

enclos corp
2770 Blue Water Road
Eagan, MN 55121-1400
Tel. 651-796-6100 • Fax 651-994-6360
Engineering Locations
Eagan, MN • Montreal, QC, CA • Moncton, NB, CA
St. Louis, MO • Manila, PH

REVISIONS

1.	4/9/2009 REV'S PER M.D.B.C.C.O.

SEAL:

APR 28 2009

Reviewed For Structural Integrity Only

BROMLEY · COOK ENGINEERING, INC.
STRUCTURAL ENGINEERING SERVICES
5440 N.W. 33RD AVENUE SUITE 100
FORT LAUDERDALE, FLORIDA 33309
TEL: (954) 772-4624 FAX: (954) 772-4634
CERT. OF AUTH. #00009124
WILLIAM D. COOK P.E.
FLA P.E. # 43904
FLA S.I. # 2008

Date	Scale
7/31/08	

Drawing No. 5530-LM

Drawing Title
5530 SERIES WINDOW WALL
LARGE MISSILE IMPACT

Sheet No. 14/22

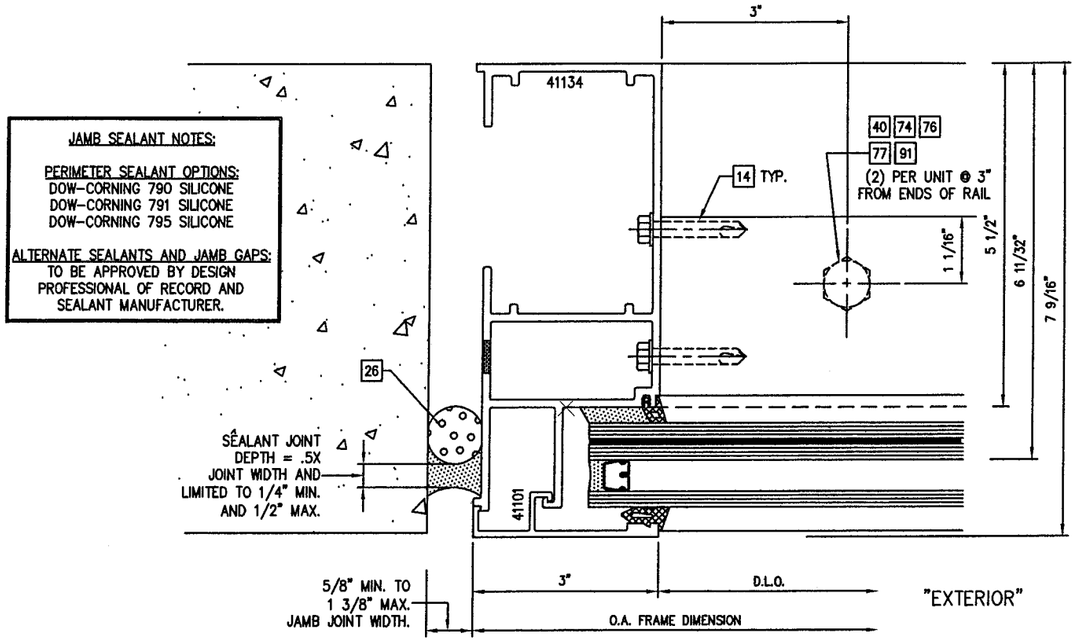

1/15 JAMB DETAIL – 1 3/8" GLASS
WITH THRU-CAN ANCHOR OPTION

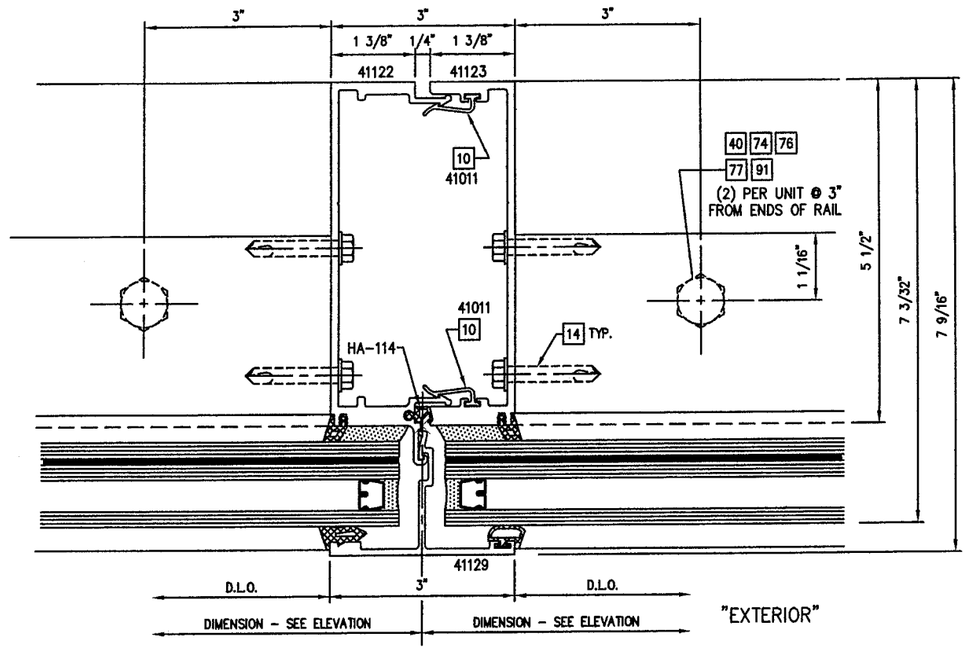

2/15 MULLION DETAIL – 1 3/8" GLASS
WITH THRU-CAN ANCHOR OPTION

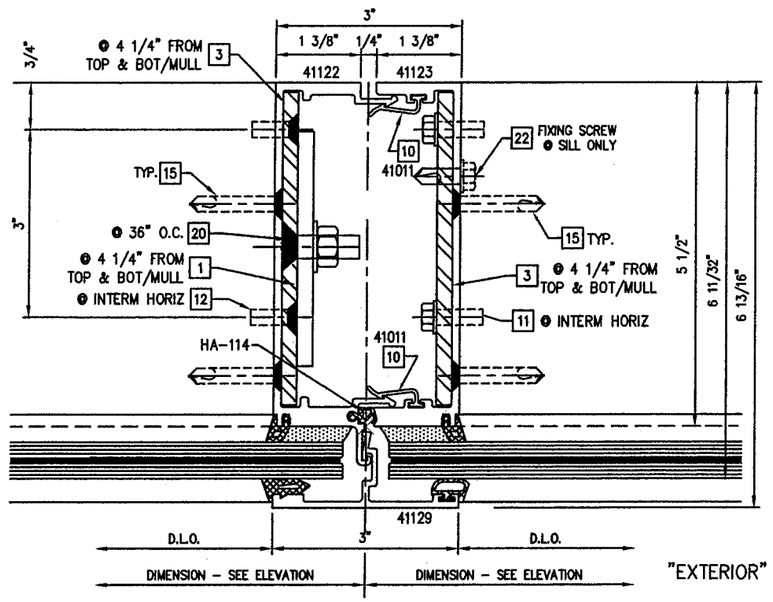

3/15 VERTICAL MULLION DETAIL – 9/16" CAPTURED GLASS
WITH STEEL REINFORCING

SEE MULLION CHART ON PAGE 8 FOR MULLION REINFORCING OPTIONS

FOR MIAMI-DADE CO. B.C.C.O.

Approved as complying with the Florida Building Code
Date MAY 20, 2009
NOA# 08-0915.04
Miami Dade Product Control Division
By Manuel Perez

enclos corp
2770 Blue Water Road
Eagan, MN 55121-1400
Tel. 651-796-6100 • Fax 651-994-6360
Engineering Locations
Eagan, MN • Montreal, QC, CA • Moncton, NB, CA
St. Louis, MO • Manila, PH

REVISIONS

1.	4/9/2009 REV'S PER M.D.B.C.C.O.

SEAL:

APR 2 8 2009
Reviewed For Structural Integrity Only

BROMLEY · COOK ENGINEERING, INC.
STRUCTURAL ENGINEERING SERVICES
5440 N.W. 33RD AVENUE SUITE 100
FORT LAUDERDALE, FLORIDA 33309
TEL: (954) 772-4824 FAX: (954) 772-4634
CERT. OF AUTH. #00009124
WILLIAM D. COOK P.E.
FLA. P.E. # 43804
FLA S.I. # 2008

Date	Scale
7/31/08	

Drawing No.
5530-LM

Drawing Title
5530 SERIES WINDOW WALL
LARGE MISSILE IMPACT

Sheet No.
15/22

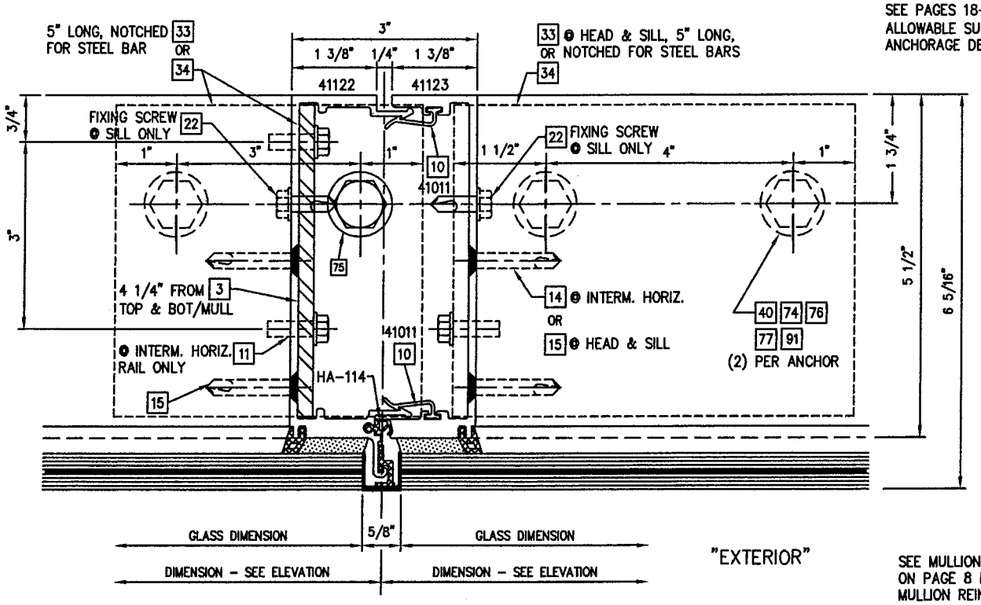

1/16 VERTICAL MULLION DETAIL - 9/16" STRUCTURAL GLAZED GLASS
WITH SHEAR CLIP ANCHOR OPTION

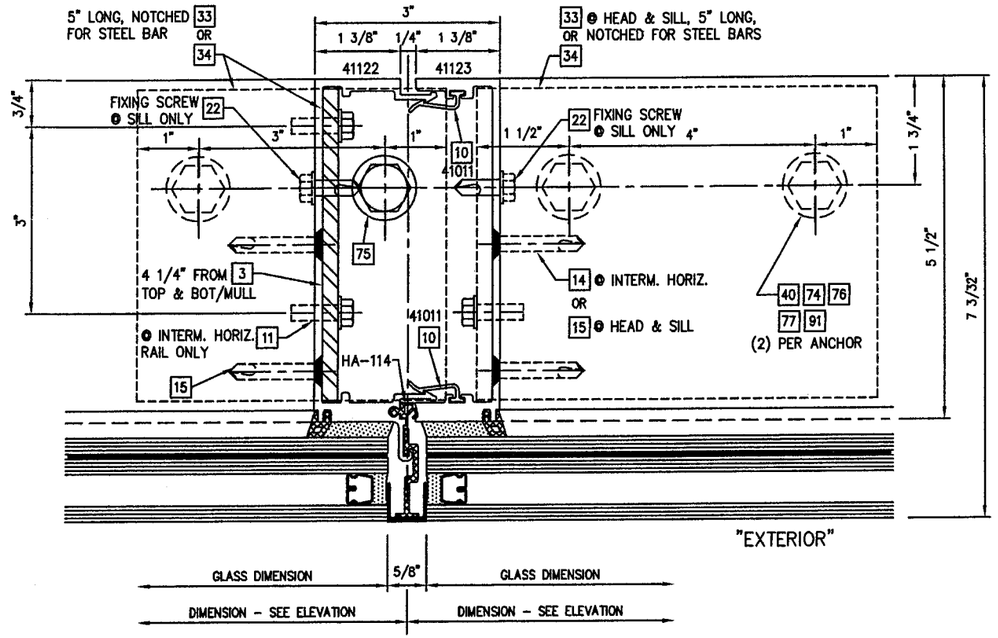

3/16 VERTICAL MULLION DETAIL - 1 3/8" STRUCTURAL GLAZED GLASS
WITH SHEAR CLIP ANCHOR OPTION

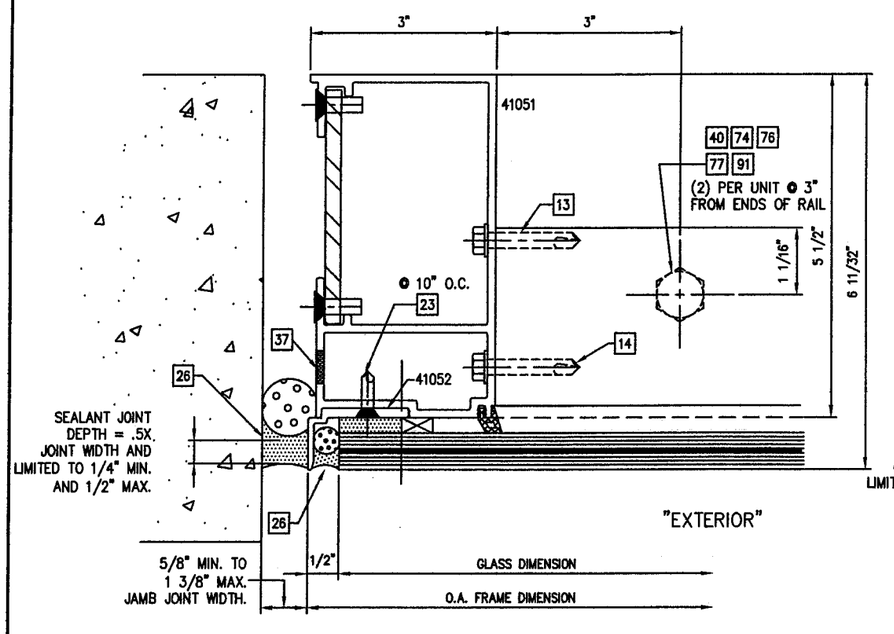

2/16 JAMB DETAIL - 9/16" STRUCTURAL GLAZED GLASS
WITH THRU-CAN ANCHOR OPTION

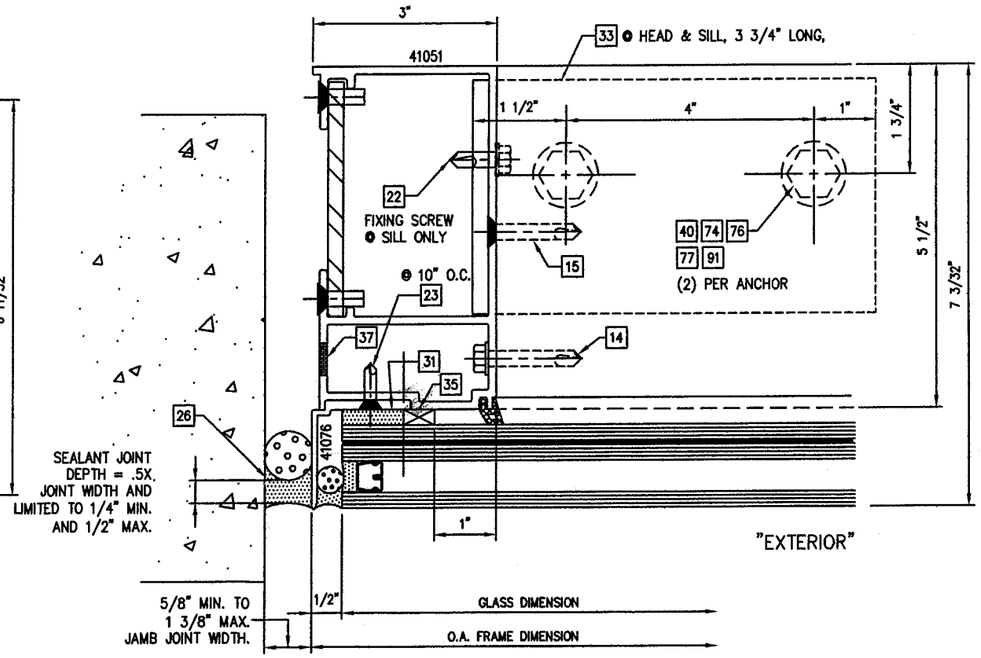

4/16 VERTICAL END JAMB DETAIL - 1 3/8" STRUCTURAL GLAZED GLASS
WITH SHEAR CLIP ANCHOR OPTION

JAMB SEALANT NOTES:

PERIMETER SEALANT OPTIONS:
DOW-CORNING 790 SILICONE
DOW-CORNING 791 SILICONE
DOW-CORNING 795 SILICONE

ALTERNATE SEALANTS AND JAMB GAPS:
TO BE APPROVED BY DESIGN PROFESSIONAL OF RECORD AND SEALANT MANUFACTURER.

FOR MIAMI-DADE CO. B.C.C.O.

Approved as complying with the Florida Building Code
Date: MAY 20, 2009
NOA#: 08-0915.09
Miami-Dade Product Control Division
By: Manuel Perez

enclos corp
2770 Blue Water Road
Eagan, MN 55121-1400
Tel. 651-796-6100 • Fax 651-994-6360
Engineering Locations
Eagan, MN • Montreal, QC, CA • Moncton, NB, CA
St. Louis, MO • Manila, PH

REVISIONS

1.	4/9/2009 REV'S PER M.D.B.C.C.O.

SEAL:
APR 28 2009
Reviewed For Structural Integrity Only

BROMLEY - COOK ENGINEERING, INC.
STRUCTURAL ENGINEERING SERVICES
5440 N.W. 33RD AVENUE SUITE 100
FORT LAUDERDALE, FLORIDA 33309
TEL: (954) 772-4624 FAX: (954) 772-4634
CERT. OF AUTH. #00009124
WILLIAM D. COOK P.E.
FLA P.E. # 43904
FLA S.I. # 2008

Date	Scale
7/31/08	

Drawing No.
5530-LM

Drawing Title
5530 SERIES WINDOW WALL
LARGE MISSILE IMPACT

Sheet No.
16/22

SEE MULLION CHART ON PAGE 8 FOR MULLION REINFORCING OPTIONS

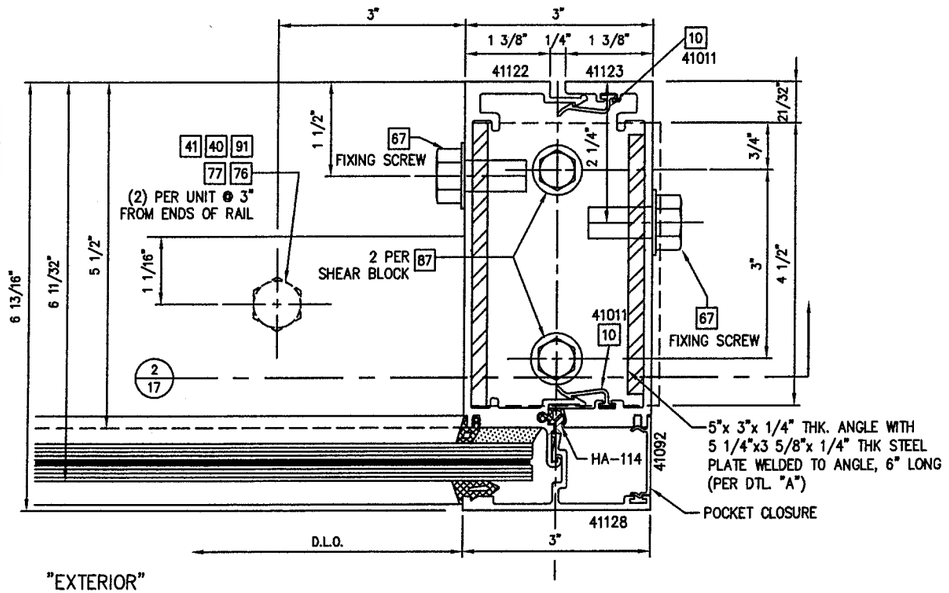

1/17 VERTICAL MULLION DETAIL – 9/16" CAPTURED GLASS
AT DOOR JAMB MULLION WITH SHEAR BLOCK ANCHOR

SEE PAGES 18-19 FOR ALLOWABLE SUBSTRATES/ ANCHORAGE DETAILS

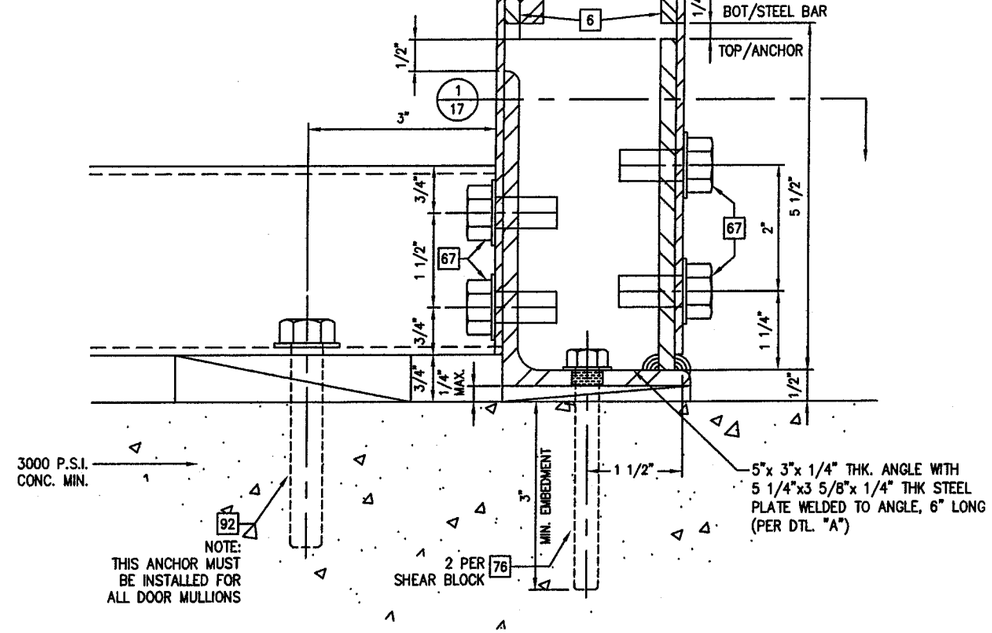

2/17 SECTION AT DOOR ANCHOR

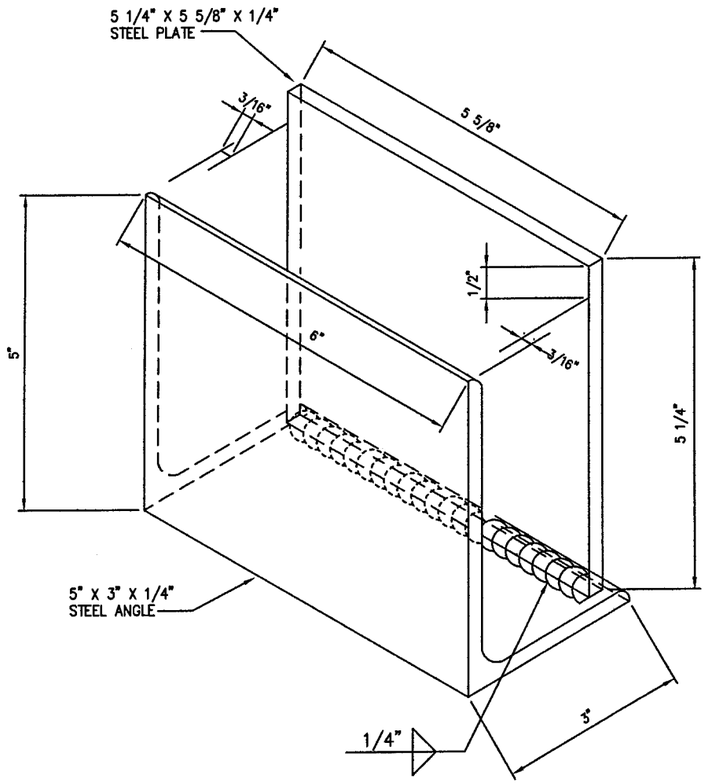

A/17 ANCHOR DETAIL "A"

FOR MIAMI-DADE CO. B.C.C.O.

Approval as complying with the Florida Building Code
Date MAY 20, 2009
NOA# 08-0915.04
Miami-Dade Product Control Division
By Manuel Perez

enclos corp

2770 Blue Water Road
Eagan, MN 55121-1400
Tel. 651-799-6100 • Fax 651-994-6360

Engineering Locations
Eagan, MN • Montreal, QC, CA • Moncton, NB, CA
St. Louis, MO • Manila, PH

REVISIONS

1.	4/9/2009 REV'S PER M.D.B.C.C.O.

SEAL:

APR 2 8 2009
Reviewed For Structural Integrity Only

BROMLEY - COOK ENGINEERING, INC.
STRUCTURAL ENGINEERING SERVICES
5440 N.W. 33RD AVENUE SUITE 100
FORT LAUDERDALE, FLORIDA 33309
TEL: (954) 772-4624 FAX: (954) 772-4634
CERT. OF AUTH. #00009124
WILLIAM D. COOK P.E.
FLA P.E. # 43904
FLA S.I. # 2008

Date	Scale
7/31/08	

Drawing No.
5530-LM

Drawing Title
5530 SERIES WINDOW WALL
LARGE MISSILE IMPACT

Sheet No.
17/22

MAX. DESIGN PRESSURES (P.S.F.) FOR VARIOUS ANCHOR OPTIONS

MODULE WD. C.L. TO C.L.	MULLION HGT.	ANCHOR OPTIONS					
		ANCHOR TYPE "H1"	ANCHOR TYPE "S1"	ANCHOR TYPE "H2"	ANCHOR TYPE "S2"	ANCHOR TYPE "H3"	ANCHOR TYPE "S3"
42" 48" 52" 54" 60"	60"	+110, −143 / +110, −143	+110, −143 / +110, −143	+110, −143 / +110, −143	+110, −143 / +110, −143	+90, −90	+90, −90
42" 48" 52" 54" 60"	72"	+90, −90	+90, −90	+110, −130	+110, −130		
42" 48" 52" 54" 60"	84"						
42" 48" 52" 54" 60"	84"						
42" 48" 52" 54" 60"	96"					+90, −90	+90, −90
42" 48" 52" 54" 60"	114"						
42" 48" 52" 54" 60"	120"	+90, −90	+90, −90	+110, −130	+110, −130		

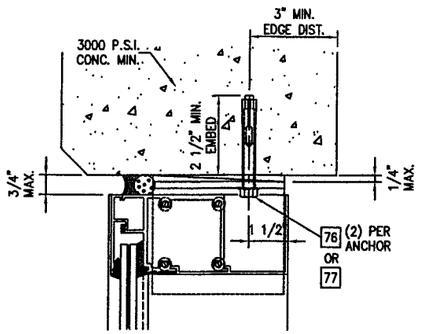

TYPE "H1" –HEAD ANCHOR (W/SHEAR CLIPS)

"L" ANCHOR CLIPS WITH
3/8" DIA. POWER BOLTS
OR
3/8" POWER WEDGE BOLT
INTO 3000 P.S.I. MIN. CONCRETE

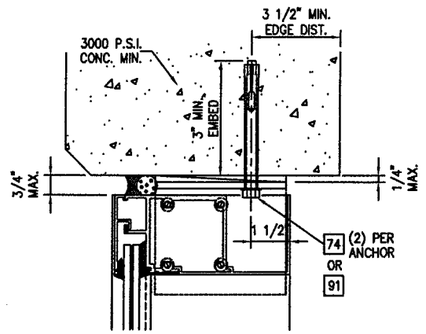

TYPE "H2" –HEAD ANCHOR (W/SHEAR CLIPS)

"L" ANCHOR CLIPS WITH
1/2" DIA. POWER BOLTS
OR
1/2" POWER WEDGE BOLT
INTO 3000 P.S.I. MIN. CONCRETE

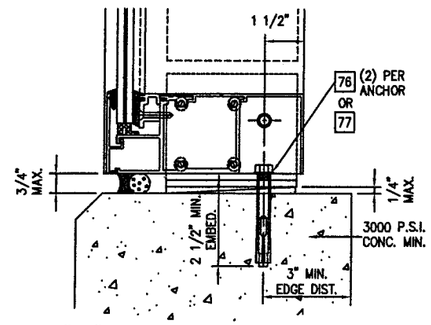

TYPE "S1" –SILL ANCHOR (W/SHEAR CLIPS)

"L" ANCHOR CLIPS WITH
3/8" DIA. POWER BOLTS
OR
3/8" POWER WEDGE BOLT
INTO 3000 P.S.I. MIN. CONCRETE

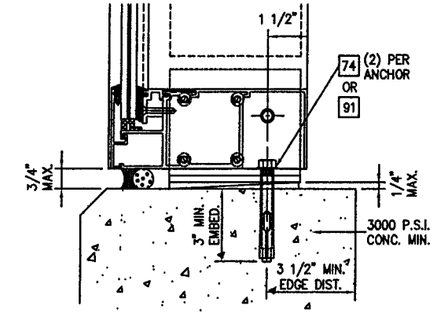

TYPE "S2" –SILL ANCHOR (W/SHEAR CLIPS)

"L" ANCHOR CLIPS WITH
1/2" DIA. POWER BOLTS
OR
1/2" POWER WEDGE BOLT
INTO 3000 P.S.I. MIN. CONCRETE

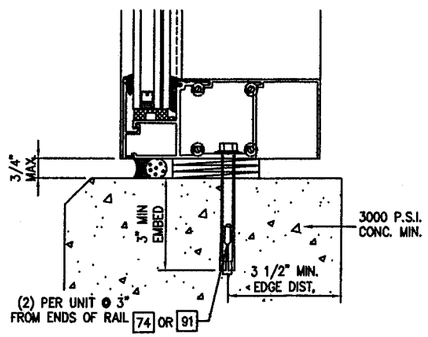

TYPE "S3" –SILL ANCHOR (THRU–CAN)

THRU SILL CAN ANCHOR WITH
1/2" DIA. POWER BOLTS
OR
1/2" POWER WEDGE BOLT
INTO 3000 P.S.I. MIN. CONCRETE

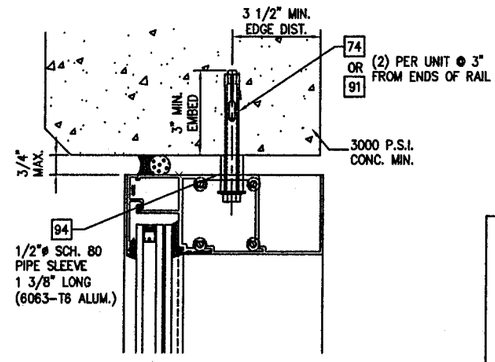

TYPE "H3" –HEAD ANCHOR (THRU–CAN)

THRU SILL CAN ANCHOR WITH
1/2" DIA. POWER BOLTS
OR
1/2" POWER WEDGE BOLT
INTO 3000 P.S.I. MIN. CONCRETE

FOR MIAMI–DADE CO. B.C.C.O.

Approved as complying with the Florida Building Code
Date MAY 20, 2009
NOA# 08-0715.09
Miami-Dade Product Control Division
By

enclos corp

2770 Blue Water Road
Eagan, MN 55121-1400
Tel. 651-796-6100 • Fax 651-994-6380

Engineering Locations
Eagan, MN • Montreal, QC, CA • Moncton, NB, CA
St. Louis, MO • Manila, PH

REVISIONS

1.	4/9/2009 REV'S PER M.D.B.C.C.O.

SEAL:

APR 28 2009
Reviewed For Structural Integrity Only

BROMLEY • COOK ENGINEERING, INC.
STRUCTURAL ENGINEERING SERVICES
5440 N.W. 33RD AVENUE SUITE 100
FORT LAUDERDALE, FLORIDA 33309
TEL: (954) 772-4624 FAX: (954) 772-4634
CERT. OF AUTH. #00009124
WILLIAM D. COOK P.E.
FLA P.E. # 43904
FLA S.I. # 2008

Date	Scale
7/31/08	

Drawing No.
5530–LM

Drawing Title
5530 SERIES WINDOW WALL
LARGE MISSILE IMPACT

Sheet No.
18/22

MAX. DESIGN PRESSURES (P.S.F.) FOR VARIOUS ANCHOR OPTIONS

MODULE WD. C.L. TO C.L.	MULLION HGT.	ANCHOR OPTIONS					
		ANCHOR TYPE "H4"	ANCHOR TYPE "S4"	ANCHOR TYPE "H5/S5"	ANCHOR TYPE "H6/S6"	ANCHOR TYPE "S7"	ANCHOR TYPE "H8/S8"
42" 48" 52" 54" 60"	60"	+90, −143 / +90, −143	+90, −143 / +90, −143	+90, −143 / +90, −143	+90, −143 / +90, −143	+110, −130	+90, −143 / +90, −143
42" 48" 52" 54" 60"	72"	+90, −90	+90, −90	+110, −130	+110, −130	+110, −130	+110, −130
42" 48" 52" 54" 60"	84"					+110, −128 / +110, −128	
42" 48" 52" 54" 60"	96"	+90, −90	+90, −90	+110, −130	+110, −130	+110, −112 / +110, −112	
42" 48" 52" 54" 60"	114"			+90, −90	+90, −90	+90, −90	
42" 48" 52" 54" 60"	120"			+90, −90	+90, −90	+90, −90	+110, −130

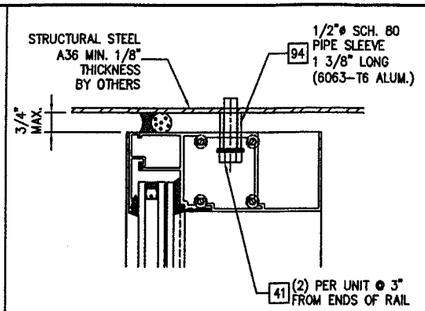

TYPE "H4" -HEAD ANCHOR (THRU-CAN)

THRU CAN ANCHOR WITH
1/2-13 GRADE 5 ZINC. PL. H.W.H.
TAPTITE SCREWS INTO STEEL

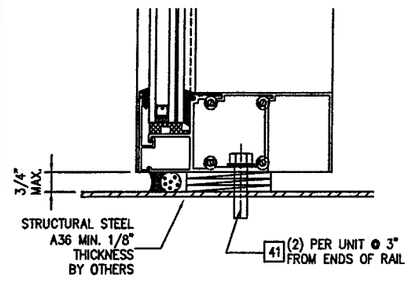

TYPE "S4" -SILL ANCHOR (THRU-CAN)

THRU CAN ANCHOR WITH
1/2-13 GRADE 5 ZINC. PL. H.W.H.
TAPTITE SCREWS INTO STEEL

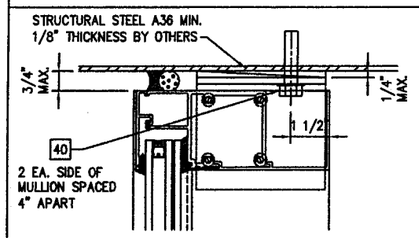

TYPE "H8" -HEAD ANCHOR (W/SHEAR CLIPS)

"L" ANCHOR CLIPS WITH
3/8-16 GRADE 5 ZINC. PL. H.W.H.
TAPTITE SCREWS (2 EA. SIDE OF MULLION)
INTO STEEL

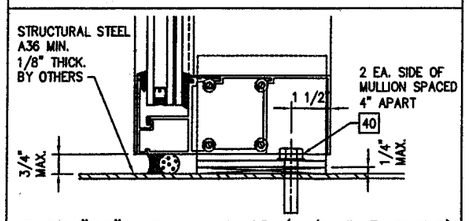

TYPE "S8" -SILL ANCHOR (W/SHEAR CLIPS)

"L" ANCHOR CLIPS WITH
3/8-16 GRADE 5 ZINC. PL. H.W.H.
TAPTITE SCREWS (2 EA. SIDE OF MULLION)
INTO STEEL

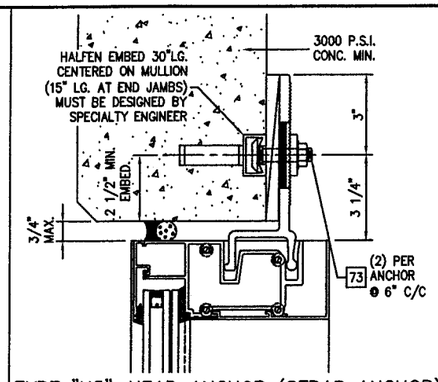

TYPE "H5"-HEAD ANCHOR (STRAP ANCHOR)

EXTRUDED ALUM. STRAP ANCHOR WITH
1/2"ø (M12) 8.8 HI-TENSILE TEE BOLT
& NUT FOR HALFEN EMBED

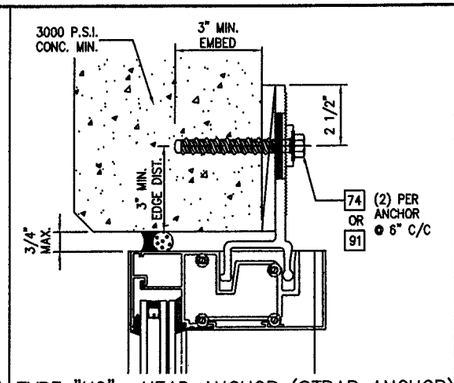

TYPE "H6" -HEAD ANCHOR (STRAP ANCHOR)

EXTRUDED ALUM. STRAP ANCHOR WITH
1/2" DIA. POWER BOLTS
OR
1/2" POWER WEDGE BOLT
INTO 3000 P.S.I. MIN. CONCRETE

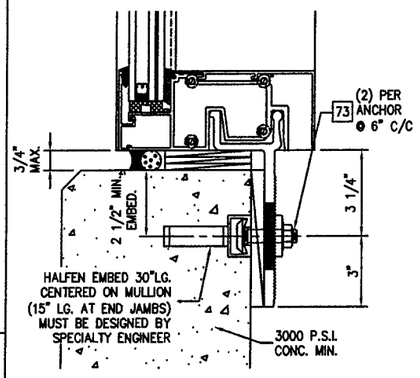

TYPE "S5"-SILL ANCHOR (STRAP ANCHOR)

EXTRUDED ALUM. STRAP ANCHOR WITH
1/2"ø (M12) 8.8 HI-TENSILE TEE BOLT
& NUT FOR HALFEN EMBED

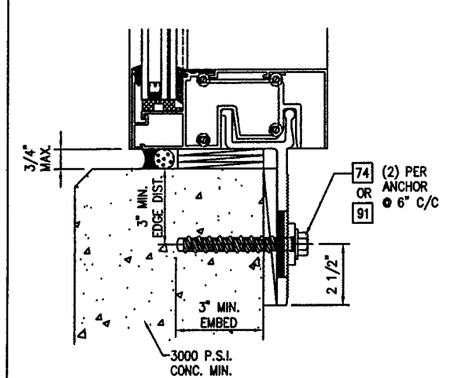

TYPE "S6" -SILL ANCHOR (STRAP ANCHOR)

EXTRUDED ALUM. STRAP ANCHOR WITH
1/2" DIA. POWER BOLTS
OR
1/2" POWER WEDGE BOLT
INTO 3000 P.S.I. MIN. CONCRETE

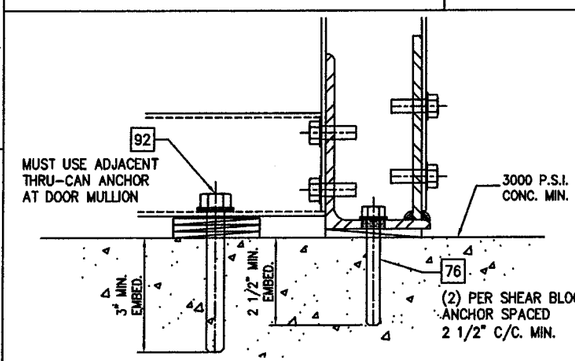

TYPE "S7" -DOOR MULLION ANCHOR

SHEAR BLOCK ANCHOR WITH
3/8" DIA. POWERS WEDGE BOLTS
INTO CONC. SLAB

FOR MIAMI-DADE CO. B.C.C.O.

Approved as complying with the Florida Building Code
Date MAY 20, 2009
NOA# 08-0915.09
Miami-Dade Product Control Division
By Maureen Perez

enclos corp

2770 Blue Water Road
Eagan, MN 55121-1400
Tel. 651-796-6100 • Fax 651-994-6360
Engineering Locations
Eagan, MN • Montreal, QC, CA • Moncton, NB, CA
St. Louis, MO • Manila, PH

REVISIONS

1	4/9/2009 REV'S PER M.D.B.C.C.O.

SEAL:

APR 28 2009
Reviewed For Structural Integrity Only

BROMLEY • COOK ENGINEERING, INC.
STRUCTURAL ENGINEERING SERVICES
5440 N.W. 33RD AVENUE SUITE 100
FORT LAUDERDALE, FLORIDA 33309
TEL: (954) 772-4624 FAX: (954) 772-4634
CERT. OF AUTH. #00009124
WILLIAM D. COOK P.E.
FLA P.E. # 43904
FLA S.I. # 2008

Date	Scale
7/31/08	

Drawing No.
5530-LM

Drawing Title
5530 SERIES WINDOW WALL
LARGE MISSILE IMPACT

Sheet No.
19/22

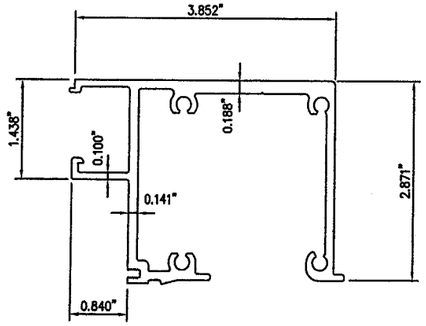

41013
HEAD/SILL (9/16" GLAZING)

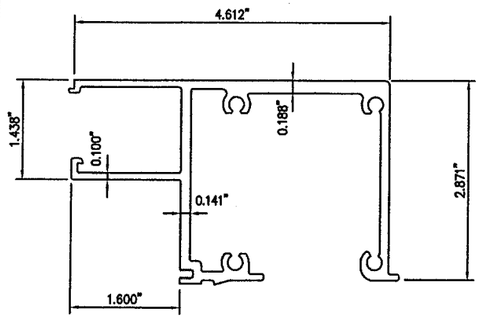

41136
HEAD/SILL (1 3/8" GLAZING)

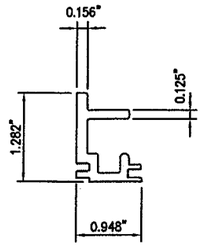

41044
9/16" GLAZING ADAPTOR

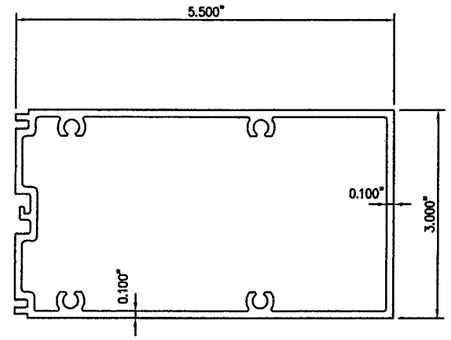

41026
INTERMEDIATE HORIZONTAL

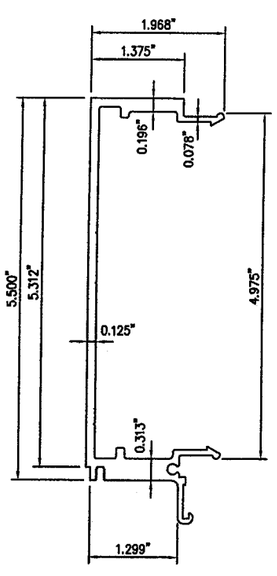

41122
MALE MULLION

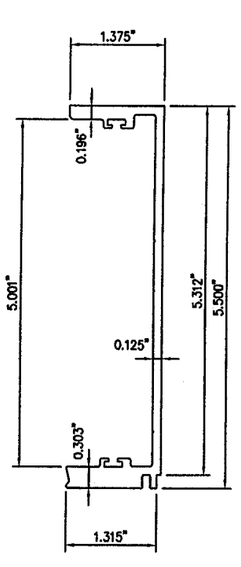

41123
FEMALE MULLION

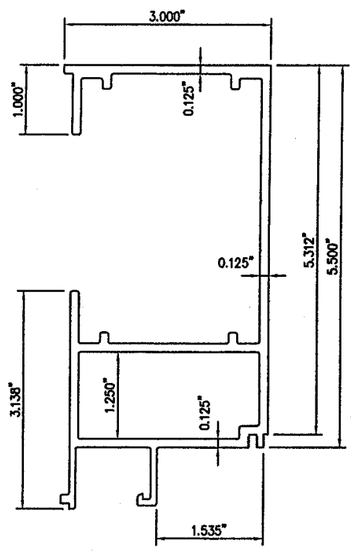

41133
JAMB MULLION (9/16" GLAZING)

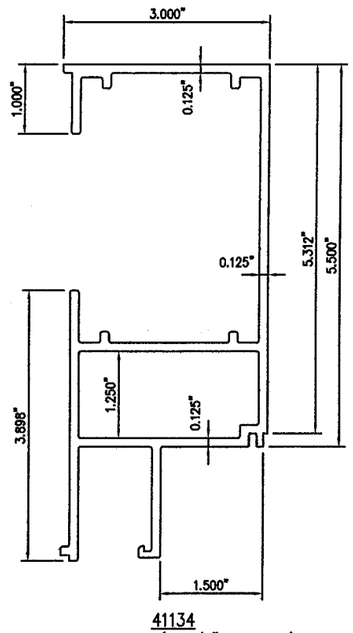

41134
JAMB MULLION (1 3/8" GLAZING)

EXTRUSIONS (6063-T6 ALLOY)

FOR MIAMI-DADE CO. B.C.C.O.

Approved as complying with the Florida Building Code
Date MAY 20, 2009
NOA# 08-0915.09
Miami Dade Product Control Division
By: Manuel Perez

enclos corp
2770 Blue Water Road
Eagan, MN 55121-1400
Tel. 651-796-6100 • Fax 651-994-6360
Engineering Locations
Eagan, MN • Montreal, QC, CA • Moncton, NB, CA
St. Louis, MO • Manila, PH

REVISIONS

1	4/9/2009 REV'S PER M.D.B.C.C.O.

SEAL:

APR 2 8 2009
Reviewed For Structural Integrity Only

BROMLEY - COOK ENGINEERING, INC.
STRUCTURAL ENGINEERING SERVICES
5440 N.W. 33RD AVENUE SUITE 100
FORT LAUDERDALE, FLORIDA 33309
TEL: (954) 772-4624 FAX: (954) 772-4634
CERT. OF AUTH. #00009124
WILLIAM D. COOK P.E.
FLA P.E. # 43904
FLA S.I. # 2008

Date 7/31/08
Scale

Drawing No. 5530-LM

Drawing Title
5530 SERIES WINDOW WALL
LARGE MISSILE IMPACT

Sheet No. 20/22

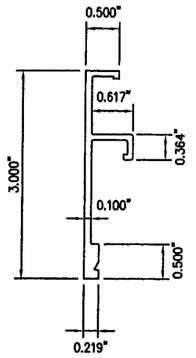

41101
JAMB FACE COVER (9/16" GLAZING)

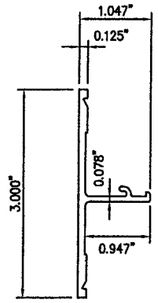

41028
HORIZ. FACE COVER (9/16" GLAZING)

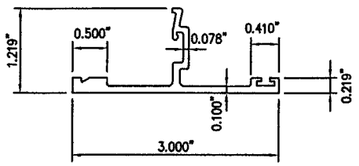

41128
VERT. FACE COVER (9/16" GLAZING)

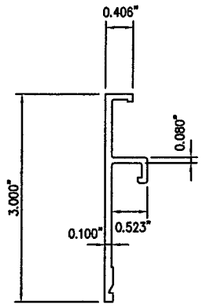

41102
HEAD/SILL FACE COVER (9/16" GLAZING)

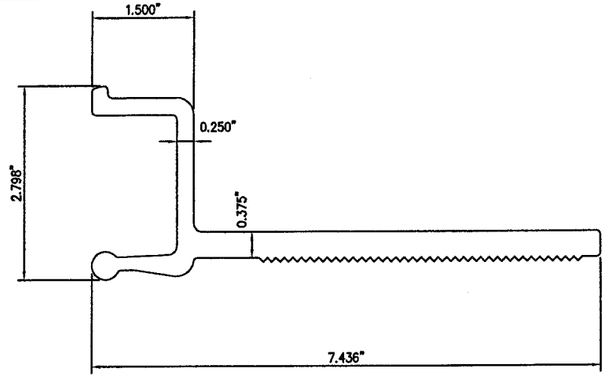

41016
STRAP ANCHOR

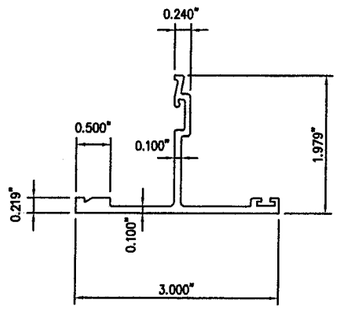

41129
VERT. FACE COVER (1 3/8" GLAZING)

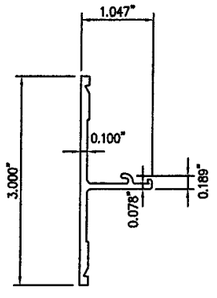

41028
HORIZ. FACE COVER (1 3/8" GLAZING)

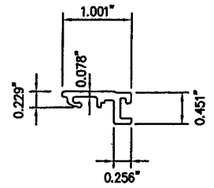

41027
SETTING CHAIR (1 3/8" GLAZING)

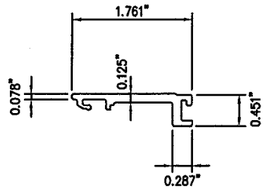

41043
SETTING CHAIR (1 3/8" GLAZING)

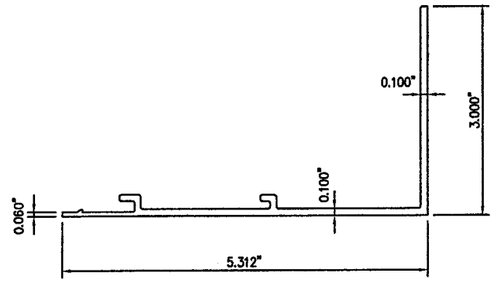

41020
HEAD/SILL INTERIOR TRIM

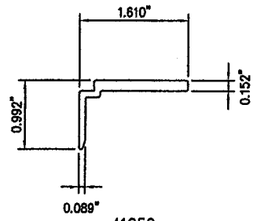

41052
JAMB CLOSURE (9/16" GLAZING)

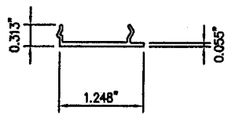

41092
POCKET FILLER

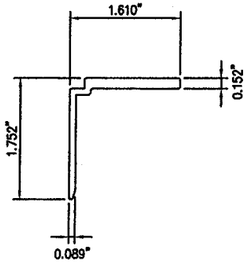

41076
JAMB CLOSURE (1 3/8" GLAZING)

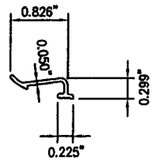

41011
ANTI BUCKLING CLIP

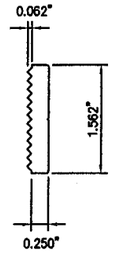

41012
ANCHOR LOCKING PLATE

EXTRUSIONS (6063-T6 ALLOY)

FOR MIAMI-DADE CO. B.C.C.O.

Approved as complying with the Florida Building Code
Date MAY 20, 2009
NOA# 08-0915.09
Miami Dade Product Control Division
By Manuel Perez

enclos corp
2770 Blue Water Road
Eagan, MN 55121-1400
Tel. 651-796-6100 • Fax 651-994-6360
Engineering Locations
Eagan, MN • Montreal, QC, CA • Moncton, NB, CA
St. Louis, MO • Manila, PH

REVISIONS

1.	4/9/2009 REV'S PER M.D.B.C.C.O.

SEAL:

APR 2 8 2009
Reviewed For Structural Integrity Only

BROMLEY · COOK ENGINEERING, INC.
STRUCTURAL ENGINEERING SERVICES
5440 N.W. 33RD AVENUE SUITE 100
FORT LAUDERDALE, FLORIDA 33309
TEL: (954) 772-4624 FAX: (954) 772-4634
CERT. OF AUTH. #00009124
WILLIAM D. COOK P.E.
FLA P.E. # 43904
FLA S.I. # 2008

Date	Scale
7/31/08	

Drawing No.
5530-LM

Drawing Title
5530 SERIES WINDOW WALL
LARGE MISSILE IMPACT

Sheet No.
21/22

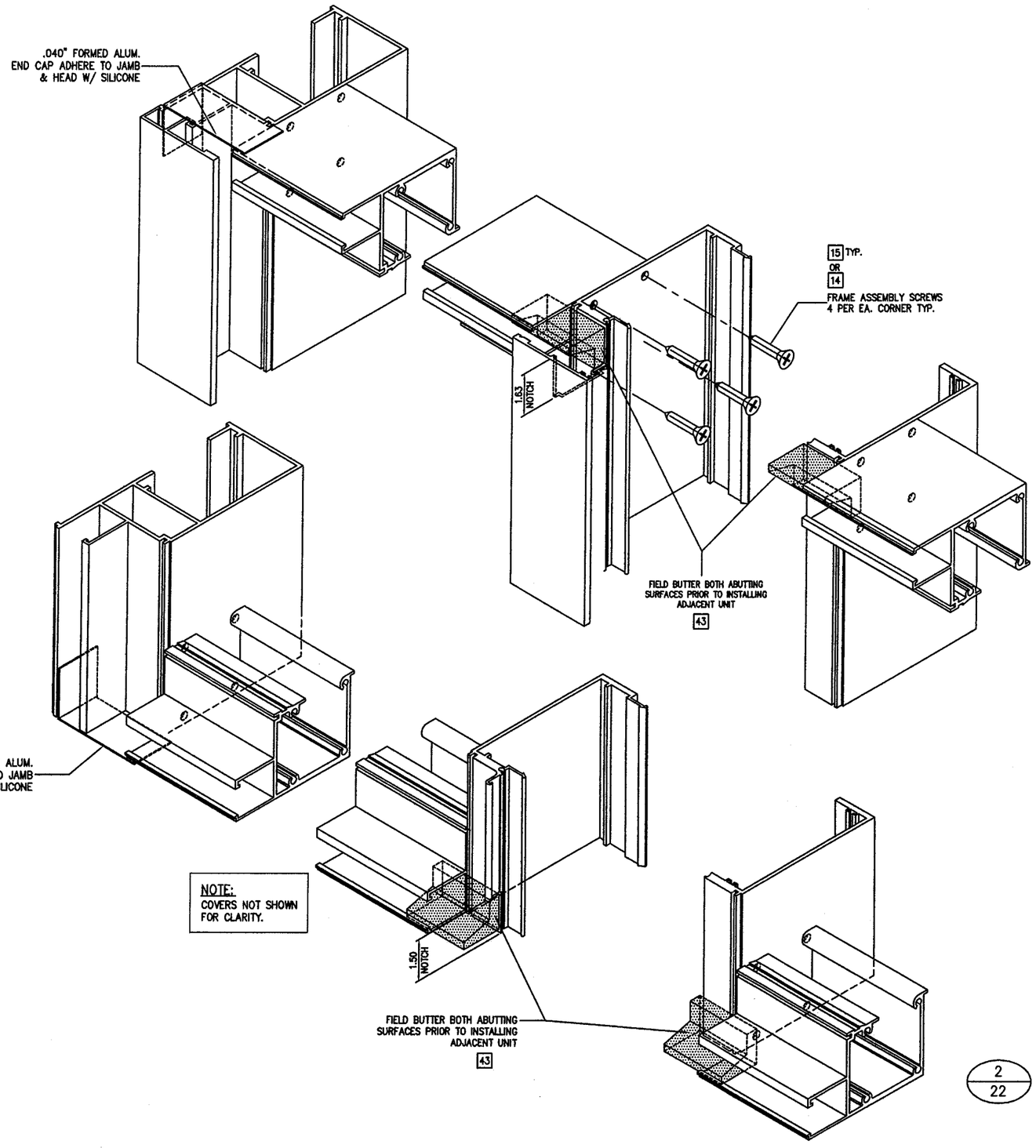

1/22 HEAD RAIL ISOMETRIC JOINERY DETAILS
SCALE: N.T.S.

2/22 SILL RAIL ISOMETRIC JOINERY DETAILS
SCALE: N.T.S.

FOR MIAMI-DADE CO. B.C.C.O.

Approved as complying with the Florida Building Code
Date MAY 20, 2009
NOA# 08-0915.09
Miami-Dade Product Control Division
By

enclos corp

2770 Blue Water Road
Eagan, MN 55121-1400
Tel. 651-796-6100 • Fax 651-994-6360
Engineering Locations
Eagan, MN • Montreal, QC, CA • Moncton, NB, CA
St. Louis, MO • Manila, PH

REVISIONS

1.	4/9/2009 REV'S PER M.D.B.C.C.O.

SEAL:

APR 2 8 2009
Reviewed For Structural Integrity Only

BROMLEY - COOK ENGINEERING, INC.
STRUCTURAL ENGINEERING SERVICES
5440 N.W. 33RD AVENUE SUITE 100
FORT LAUDERDALE, FLORIDA 33309
TEL: (954) 772-4624 FAX: (954) 772-4634
CERT. OF AUTH. #00009124
WILLIAM D. COOK P.E.
FLA P.E. # 43904
FLA S.I. # 2008

Date	Scale
7/31/08	

Drawing No.
5530-LM

Drawing Title
5530 SERIES WINDOW WALL
LARGE MISSILE IMPACT

Sheet No.
22/22