MIAMI-DADE COUNTY
BUILDING CODE COMPLIANCE OFFICE (BCCO)
PRODUCT CONTROL DIVISION

MIAMI-DADE COUNTY, FLORIDA
METRO-DADE FLAGLER BUILDING
140 WEST FLAGLER STREET, SUITE 1603
MIAMI, FLORIDA 33130-1563
(305) 375-2901 FAX (305) 372-6339
www.miamidade.gov/buildingcode

NOTICE OF ACCEPTANCE (NOA)

Enclos Corporation
550 Fairway Drive
Deerfield Beach, FL 33441

SCOPE:

This NOA is being issued under the applicable rules and regulations governing the use of construction materials. The documentation submitted has been reviewed by Miami-Dade County Product Control Division and accepted by the Board of Rules and Appeals (BORA) to be used in Miami Dade County and other areas where allowed by the Authority Having Jurisdiction (AHJ).

This NOA shall not be valid after the expiration date stated below. The Miami-Dade County Product Control Division (In Miami Dade County) and/or the AHJ (in areas other than Miami Dade County) reserve the right to have this product or material tested for quality assurance purposes. If this product or material fails to perform in the accepted manner, the manufacturer will incur the expense of such testing and the AHJ may immediately revoke, modify, or suspend the use of such product or material within their jurisdiction. BORA reserves the right to revoke this acceptance, if it is determined by Miami-Dade County Product Control Division that this product or material fails to meet the requirements of the applicable building code. This product is approved as described herein, and has been designed to comply with the Florida Building Code, including the High Velocity Hurricane Zone.

DESCRIPTION: Series "7030 SGP WW Structurally Glazed" Aluminum Window Wall System – S.M.I.

APPROVAL DOCUMENT: Drawing No. **7030SSSMI**, titled "7030 Series Window Wall Single Span Small Missile Impact", sheets 1 through 25 of 25, dated 7/31/08 with revision #2 dated 7/22/09, prepared by manufacturer, signed and sealed by William D. Cook, P.E., bearing the Miami-Dade County Product Control Approval stamp with the Notice of Acceptance number and approval date by the Miami-Dade County Product Control Division.

MISSILE IMPACT RATING: Small Missile Impact Resistant

LABELING: Each unit shall bear a permanent label with the manufacturer's name or logo, city, state and following statement: "Miami-Dade County Product Control Approved", unless otherwise noted herein.

RENEWAL of this NOA shall be considered after a renewal application has been filed and there has been no change in the applicable building code negatively affecting the performance of this product.

TERMINATION of this NOA will occur after the expiration date or if there has been a revision or change in the materials, use, and/or manufacture of the product or process. Misuse of this NOA as an endorsement of any product, for sales, advertising or any other purposes shall automatically terminate this NOA. Failure to comply with any section of this NOA shall be cause for termination and removal of NOA.

ADVERTISEMENT: The NOA number preceded by the words Miami-Dade County, Florida, and followed by the expiration date may be displayed in advertising literature. If any portion of the NOA is displayed, then it shall be done in its entirety.

INSPECTION: A copy of this entire NOA shall be provided to the user by the manufacturer or its distributors and shall be available for inspection at the job site at the request of the Building Official.

This NOA consists of this page 1 and evidence page E-1, as well as approval document mentioned above.

The submitted documentation was reviewed by **Manuel Perez, P.E.**

MIAMI-DADE COUNTY APPROVED

Enclos Corporation

NOTICE OF ACCEPTANCE: EVIDENCE SUBMITTED

A. DRAWINGS

1. Manufacturer's die drawings and sections.
2. Drawing No **7030SSSMI**, Sheets 1 through 25 of 25, titled "7030 Series Window Wall Single Span Small Missile Impact", dated 7/31/08 with revision #2 dated 7/22/09 prepared by manufacturer, signed and sealed by William D. Cook, P.E.

B. TESTS

1. Test reports on: 1) Air Infiltration Test, per FBC, TAS 202-94
   2) Uniform Static Air Pressure Test, Loading per FBC TAS 202-94
   3) Water Resistance Test, per FBC, TAS 202-94
   4) Small Missile Impact Test per FBC, TAS 201-94
   5) Large Missile Impact Test per FBC, TAS 201-9
   6) Cyclic Wind Pressure Loading per FBC, TAS 203-94

   along with marked-up drawings and installation diagram of aluminum window wall system prepared by Hurricane Testing Lab., Test Report No. **HTL-0434-0616.06**, specimens A, B, C, G, 3, 4, 5, 14, 15, 16 and 17, dated 6/13/07, signed and sealed by Vinu J. Abraham, P.E.

C. CALCULATIONS

1. Revised Anchor Calculations, and Structural Analysis, complying with FBC 2007, dated 08/24/08 and 02/17/09, prepared by Bromley-Cook Engineering, signed and sealed by William D. Cook, P.E.
   Complies with ASTM E1300-02

D. QUALITY ASSURANCE

1. Miami Dade Building Code Compliance Office (BCCO).

E. MATERIAL CERTIFICATIONS

1. Notice of Acceptance No. **06-0216.06** issued to Solutia Inc. for their "**Saflex IIIG Clear or colored interlayer**" dated 05/04/06, expiring on 05/21/11.

F. STATEMENTS

1. Statement letter of conformance, dated August 25, 2008, signed and sealed by William D. Cook, P.E.
2. Statement letter of no financial interest, dated August 25, 2008, signed and sealed by William D. Cook, P.E.

G. OTHERS

1. None.

Manuel Perez, P.E.
Product Control Examiner
NOA No. 08-0915.15
Expiration Date: September 9, 2014
Approval Date: September 9, 2009

ENCLOS CORP. FLORIDA HURRICANE SYSTEMS
7030 SERIES SINGLE SPAN WINDOW WALL
4-SIDED STRUCTURALLY GLAZED WITH AND WITHOUT FACE CAPS
SMALL MISSILE IMPACT RESISTANT

GLASS TYPES - HEAT STRENGTHENED

MONOLITHIC / LAMINATED

I
- 1/4" CLEAR HEAT STRENGTHENED
- .060" PVB INTERLAYER
- 1/4" CLEAR HEAT STRENGTHENED

M
- 1/4" CLEAR HEAT STRENGTHENED
- .060" PVB INTERLAYER
- 1/4" CLEAR HEAT STRENGTHENED W/FRIT

INSULATED / LAMINATED

J
INNER LITE-
- 1/4" CLEAR HEAT STRENGTHENED
- .060 PVB INTERLAYER
- 1/4" CLEAR HEAT STRENGTHENED
- 1/2" CLEAR AIR SPACE

OUTER LITE-
- 1/4" CLEAR TEMPERED

.060" PVB INTERLAYER BY SOLUTIA

GLASS TYPES - TEMPERED

MONOLITHIC / LAMINATED

It
- 1/4" CLEAR TEMPERED
- .060" PVB INTERLAYER
- 1/4" CLEAR TEMPERED

INSULATED / LAMINATED

Jt
INNER LITE-
- 1/4" CLEAR TEMPERED
- .060" PVB INTERLAYER
- 1/4" CLEAR TEMPERED
- 1/2" CLEAR AIR SPACE

OUTER LITE-
- 1/4" CLEAR TEMPERED

.060" PVB INTERLAYER BY SOLUTIA

DRAWING INDEX

SHEET	DESCRIPTION
1/25	COVER SHEET
2/25	MATERIALS/PARTS LEGEND
3/25	7030 ELEVATIONS
4/25	7030 GLASS SIZE CHARTS (CAPTURED MONO.)
5/25	7030 GLASS SIZE CHARTS (STRUCTURAL MONO.)
6/25	7030 GLASS SIZE CHARTS (CAPTURED I.G.)
7/25	7030 GLASS SIZE CHARTS (STRUCTURAL I.G.)
8/25	7030 MULLION SPAN CHARTS
9/25	DETAILS - HEAD & INT. HORIZ. (CAPTURED)
10/25	DETAILS - SILL & DOOR HEADER (CAPTURED)
11/25	DETAILS - HEAD & SILL STRAP ANCHOR (MONO.)
12/25	DETAILS - HEAD & SILL STRAP ANCHOR (I.G.)
13/25	DETAILS - HEAD & INT. HORIZ. (STRUCTURAL)
14/25	DETAILS - SILLS (STRUCTURAL)
15/25	DETAILS - JAMB & MULL (CAPTURED)
16/25	DETAILS - JAMB & MULL (CAPTURED)
17/25	DETAILS - JAMB & MULL (STRUCTURAL)
18/25	DETAILS - JAMB & MULL (STRUCTURAL)
19/25	DETAILS - DOOR JAMB ANCHOR (CAPTURED)
20/25	ANCHORAGE OPTIONS CHART
21/25	ANCHORAGE OPTIONS CHART
22/25	EXTRUSIONS
23/25	EXTRUSIONS
24/25	EXTRUSIONS
25/25	CORNER ASSEMBLY DETAILS

GENERAL NOTES

1.) ALUMINUM CURTAIN WALL SYSTEM IS TESTED FOR SMALL MISSILE IMPACT. SHUTTERS REQUIRED FROM GRADE TO 30' ABOVE GRADE. NO SHUTTERS REQ'D ABOVE 30'.

2.) FLORIDA BUILDING CODE REQUIREMENTS (HVHZ) REQUIREMENTS: TAS-201 - SMALL MISSILE IMPACT TAS-202 - AIR LEAKAGE, WATER PENETRATION & STRUCTURAL PERFORMANCE (WATER @ 20 psf.) TAS-203 - CYCLING

3.) THIS SYSTEM MAY BE USED IN CONJUNCTION WITH APPROVED ENTRANCE DOORS.

4.) CODE REQUIREMENTS FOR SAFEGUARDS MUST BE OBSERVED.

5.) THIS PRODUCT IS DESIGNED TO COMPLY WITH THE HIGH VELOCITY HURRICANE ZONE OF THE 2007 FLORIDA BUILDING CODE (FBC-2007)

6.) WOOD BUCKS BY OTHERS MUST BE ANCHORED PROPERLY TO TRANSFER LOADS TO THE STRUCTURE. BUCKS SHALL BE DESIGNED BY PROFESSIONAL ENGINEER OF RECORD.

7.) OPENINGS SHALL BE CONSTRUCTED IN AN ACCEPTABLE MANNER BY WHICH INSTALLED ALUMINUM FRAMES CAN BE PROPERLY ANCHORED TO THE STRUCTURE ACCORDING TO DETAILS AND CHARTS ON THESE DESIGN DRAWINGS.

8.) ANCHORS SHALL BE AS LISTED IN CHARTS AND SPACED AS SPCIFIED ON THESE DESIGN DRAWINGS.

9.) ANCHOR EMBEDMENT TO BASE MATERIAL SHALL BE AS SPECIFIED ON THESE DESIGN DRAWINGS (BEYOND WALL DRESSING OR STUCCO)

10.) ALL STEEL IN CONTACT WITH ALUMINUM TO BE PAINTED OR PLATED. COATING SHALL BE BITUMINOUS OR ASPHALTIC IN CONFORMANCE WITH FBC 2003.8.4.1.

11.) 33% INCREASE IN ALLOWABLE STRESS WAS NOT USED IN THE DESIGN OF THE FRAMING SYSTEM AND ANCHORS.

GASKET/SETTING BLOCK LIST

PART # PG-1	70 DURO SILICONE	PRESET GASKET	
PART # HA-132	70 DURO EPDM	MULLION SEAL GASKET	
PART # WG-1	70 DURO EPDM	WEDGE GASKET	
PART # BG-1	70 DURO EPDM	ROLL-ON BULB GASKET	
PART # HA-114	70 DURO SILICONE	AIR SEAL BULB GASKET	
PART # HA-108	70 DURO SILICONE	AIR SEAL BULB GASKET	
PART # HA-103	70 DURO SILICONE	AIR SEAL BULB GASKET	

PART # GSB-1	85 DURO EPDM	SETTING BLOCK FOR 1-3/8" GLASS	
PART # GSB-2	85 DURO EPDM	SETTING BLOCK FOR INTERMEDIATE HORIZ. 1-3/8" GLASS	
PART # GSB-3	85 DURO EPDM	SETTING BLOCK FOR 9/16" GLASS	
PART # GSB-4	85 DURO EPDM	SETTING BLOCK FOR INTERMEDIATE HORIZ. 9/16" GLASS	
PART # BJF-3		9/16" GLASS BUTT JOINT FILLER	
PART # BJF-4		1 3/8" BUTT JOINT FILLER	

ABBREVIATIONS

R.O. = ROUGH OPENING
O.A.F. = OVERALL FRAME
D.L.O. = DAYLITE OPENING
GL. GLASS
L.M.I. = LARGE MISSILE IMPACT
S.M.I. = SMALL MISSILE IMPACT
OPP. = OPPOSITE
MAX. = MAXIMUM
MIN. = MINIMUM
CONC. = CONCRETE

FOR MIAMI-DADE CO. B.C.C.O.

Approved as complying with the Florida Building Code
Date SEPT. 9, 2014
NOA# 08-0915.15
Miami Dade Product Control Division
By Manuel Perez

enclos corp
2770 Blue Water Road
Eagan, MN 55121-1400
Tel. 651-796-6100 • Fax 651-994-6380
Engineering Locations
Eagan, MN • Montreal, QC, CA • Moncton, NB, CA
St. Louis, MO • Manila, PH

REVISIONS
1 7/5/2009 REV'S PER M.D.B.C.C.O.
2 7/22/2009 FINAL REVISIONS

SEAL:
AUG 17 2009
Reviewed For Structural Integrity Only

BROMLEY · COOK ENGINEERING, INC.
STRUCTURAL ENGINEERING SERVICES
5440 N.W. 33RD AVENUE SUITE 100
FORT LAUDERDALE, FLORIDA 33309
TEL: (954) 772-4624 FAX: (954) 772-4634
CERT. OF AUTH. #00009124
WILLIAM D. COOK P.E.
FLA P.E. # 43904
FLA S.I. # 2008

Date	Scale
7/31/08	

Drawing No.
7030 SS SMI

Drawing Title
7030 SERIES WINDOW WALL SINGLE SPAN SMALL MISSILE IMPACT

Sheet No.
1/25

BILL OF MATERIALS

1. N/A
2. N/A
3. STEEL BAR 1/4" x 5" (ASTM A36) (PAINTED FOR PROTECTION)
4. STEEL BAR 3/8" x 5 1/2" (ASTM A36)
5. STEEL BAR 7/8" x 5" (ASTM A36) (PAINTED FOR PROTECTION)
6. STEEL BAR 1/4" x 6" (ASTM A36)
7. STEEL BAR 1/2" x 5 1/2" (ASTM A36) (PAINTED FOR PROTECTION)
8. N/A
9. N/A
10. ANTI-BUCKLING CLIPS 4" LONG, @ 6" FROM TOP & BOTTOM AND 24" O.C. MAX
11. 1/4-20 x 3/4" GRADE 5 ZINC PLATED HWH TAPTITE SCREWS (@ HORIZONTAL RAILS U.N.O.)
12. 1/4-20 x 3/4" GRADE 5 ZINC FH PLATED TAPTITE SCREWS, (2) PER HORIZONTAL RAIL
13. #14 x 1 1/2" HWH SMS TYPE A @ HORIZONTAL RAILS (LOCATION VARIES)
14. #14 x 1 1/2" HWH SMS TYPE A @ HORIZONTAL RAILS
15. #14 x 1 1/2" FL HD SMS TYPE A @ HORIZONTAL RAILS
16. 1/4-20 x 3/4" GRADE 5 ZINC PLATED FH TAPTITE SCREWS
17. 1/4-20 x 1" GRADE 5 ZINC PLATED HWH TAPTITE SCREWS
18. #10-16 x 3/4" HWH DRIL-FLEX
19. #10 x 1 1/4" FH SMS
20. 3/8-16 x 1 1/2" FH GRADE 5 BOLTS, TACK WELDED TO STEEL BAR, W/WASHERS & LOCKNUTS @ 36" O.C.
21. #14 x 1" FH SMS, (2) PER ANCHOR, SEAL HEADS
22. 1/4-20 x 3/4" HWH DRIL-FLEX
23. #10 x 3/4" FH SMS
24. 3/8-16 x 1" GRADE 5 ZINC PLATED HWH TAPTITE SCREWS
25. 1/4-20 x 1 1/4" GRADE 5 ZINC PLATED HWH TAPTITE SCREWS
26. SILICONE SEALANT & BACKER ROD DOW CORNING 790, 791 OR 795
27. 3/8" DIA WEEP HOLES @ 1/4 PTS.
28. 3/8" DIA WEEP HOLES @ 1/3 PTS.
29. 3/16" DP. x 3/8" LONG NOTCH @ 1/3 PTS.
30. 7/8" MIN. STRUCTURAL SEALANT DOW-CORNING 983 OR 995
31. N/A
32. 1 3/8" MIN. STRUCTURAL SEALANT DOW-CORNING 983 OR 995
33. 6 1/2" x 4 1/4" x 1/4" EXTRUDED ALUM ANGLE (# 41035) X 5" LG.
34. 5" x 4 1/4" x 1/4" EXTRUDED ALUM TEE (# 41036)
35. 1/4" x 1/2" NORTON TAPE, ADHESIVE TWO SIDES
36. ACCESS NOTCH AT FASTENERS
37. ACCESS HOLES AT FASTENERS
38. SHIMS AS REQUIRED
39. 1/4-20 x 1 1/2" GRADE 5 ZINC PLATED FH TAPTITE SCREWS
40. 3/8-16 x 1 1/2" GRADE 5 ZINC PLATED HWH TAPTITE SCREWS
41. N/A
42. 1" X 5/8" X 1/8" ALUMINUM ANGLE (6063-T6)
43. SILICONE BOOT, 3" LONG, ACROSS MULLION JOINTS DOW-CORNING
44. #10 x 5/8" LOW PROFILE FH SMS
45. 1/8" POP RIVET
46. SEALANT - FULL PERIMETER DOW CORNING 790, 791 OR 795
47. N/A
48. N/A
49. N/A
50. N/A
51. #10 x 5/8" HWH SMS
52. 1/4-20 x 2" HWH SMS TYPE A
53. 3/16" x 1/2" LG. WEEP SLOTS @ 1/4 PTS.
54. 6" x 3 1/2" x 1/4" THK. STEEL ANGLE (A36) X 5" LG.
55. #14 x 3/4" FH SMS
56. 1/4-20 x 1" HWH DRILL-FLEX
57. 3/8" DIA WEEP CHECK VALVE
58. N/A
59. END DAM, 4"x 6"x .060 THK. ALUMINUM
60. 3/8-16 x 1" GRADE 5 HEX HD BOLT, WASHER, & LOCKNUT
61. 1/2-13 x 1 3/4" GRADE 5 HEX HD CAP SCREW, WASHERS, & LOCKNUT
62. 1/2-13 x 2" GRADE 5 HEX HD CAP SCREW, WASHERS, & LOCKNUT
63. 1/4-20 x 1/2" GRADE 5 ZINC PLATED FL HD TAPTITE SCREW
64. 2"x 2 1/2"x 1/8" FORMED ALUMINUM ANGLE
65. IN SPANDREL AREAS, 2 1/2" ABOVE AND BELOW HORIZONTAL RAILS & 36" O.C MAX.
66. 3/4" x 3/4" TRIANGULAR ALUMINUM SCREW BLOCK 1" LONG AT HEAD RAIL SCREW POCKETS.
67. 1/2-13 x 1" GRADE 5 ZINC PLATED HWH TAPTITE SCREWS
68. SEAL FASTENER HEADS
69. EXTRUDED ALUMINUM SNAP-IN POCKET CLOSURE (6063-T6)
70. 1/2-13 x 3 3/4" HWH POWER BOLTS, (2) PER ANCHOR
71. N/A
72. 1 1/8" DIA x 1/4" THK ALUMINUM WASHER (6063-T6)
73. 1/2-13 x 2 3/8" GR 8.8 HI-TENSILE TEE BOLT & NUT FOR HALFEN ANCHOR CHANNELS
74. 1/2-13 x 4 3/4" HWH POWER BOLTS, (2) PER ANCHOR
75. 1/2-13 GRADE 5 ZINC PLATED HWH TAPTITE SCREWS
76. N/A
77. N/A
78. N/A
79. N/A
80. 1/4-20 x 1" GRADE 5 ZINC PLATED FH TAPTITE SCREWS
81. @ FAR SIDE OF END JAMB
82. 5/8-11 x 1 3/4" GRADE 8.8 HI-TENSILE TEE BOLT FOR HALFEN SERIES ANCHOR CHANNELS
83. 1/4" THK x 1 9/16" SQ EXTRUDED ALUMINUM SERRATED WASHER
84. 1/4-20 x 1 1/2" HWH DRILL-FLEX
85. N/A
86. N/A
87. 3/8-16 x 4" GRADE 5 HWH POWER BOLT
88. STEEL BAR 3/8" x 5 1/2" (A36) (PAINTED FOR PROTECTION)
89. 1/2-13 x 3" GRADE 5 HEX HD BOLT, WASHER, & LOCKNUT
90. 3/8-16 x 2" GRADE 5 ZINC PLATED HWH TAPTITE SCREW
91. 1/2-16 x 4" HWH POWERS CO. WEDGE BOLTS, (2) PER ANCHOR
92. 1/2" DIA. HWH POWERS CO. WEDGE BOLTS, (2) PER ANCHOR
93. HALFEN EMBED. MUST BE ENGINEERED FOR SUBSTRATE CONDITIONS.
94. SCHEDULE 80 ALUM. PIPE SLEVE 1 3/8" LONG (6063-T6)

FOR MIAMI-DADE CO. B.C.C.O.

Approved as complying with the Florida Building Code
Date SEPT. 9, 2014
NOA# 08-0915.15
Miami Dade Product Control Division
By Manuel Perez

enclos corp
2770 Blue Water Road
Eagan, MN 55121-1400
Tel. 651-796-6100 • Fax 651-994-6360
Engineering Locations
Eagan, MN • Montreal, QC, CA • Moncton, NB, CA
St. Louis, MO • Manila, PH

REVISIONS

1	7/5/2009 REV'S PER M.D.B.C.C.O.
2	7/22/2009 FINAL REVISIONS

SEAL:

AUG 17 2009

Reviewed For Structural Integrity Only

BROMLEY • COOK ENGINEERING, INC.
STRUCTURAL ENGINEERING SERVICES
5440 N.W. 33RD AVENUE SUITE 100
FORT LAUDERDALE, FLORIDA 33309
TEL: (954) 772-4624 FAX: (954) 772-4634
CERT. OF AUTH. #00009124
WILLIAM D. COOK P.E.
FLA P.E. # 43904
FLA S.I. # 2008

Date	Scale
7/31/08	

Drawing No.
7030 SS SMI

Drawing Title
7030 SERIES WINDOW WALL
SINGLE SPAN
SMALL MISSILE IMPACT

Sheet No.
2/25

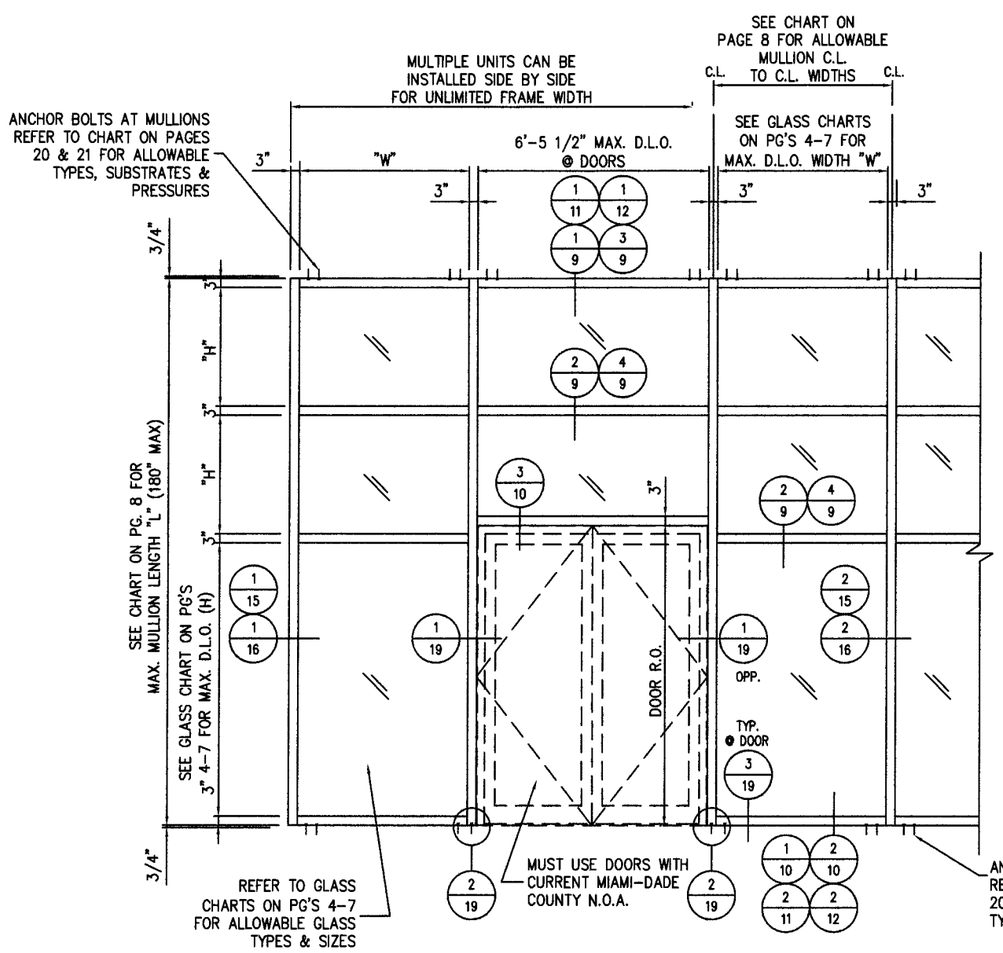

1/3 ELEVATION (VIEWED FROM EXTERIOR)
CAPTURED (W/ FACE CAPS)

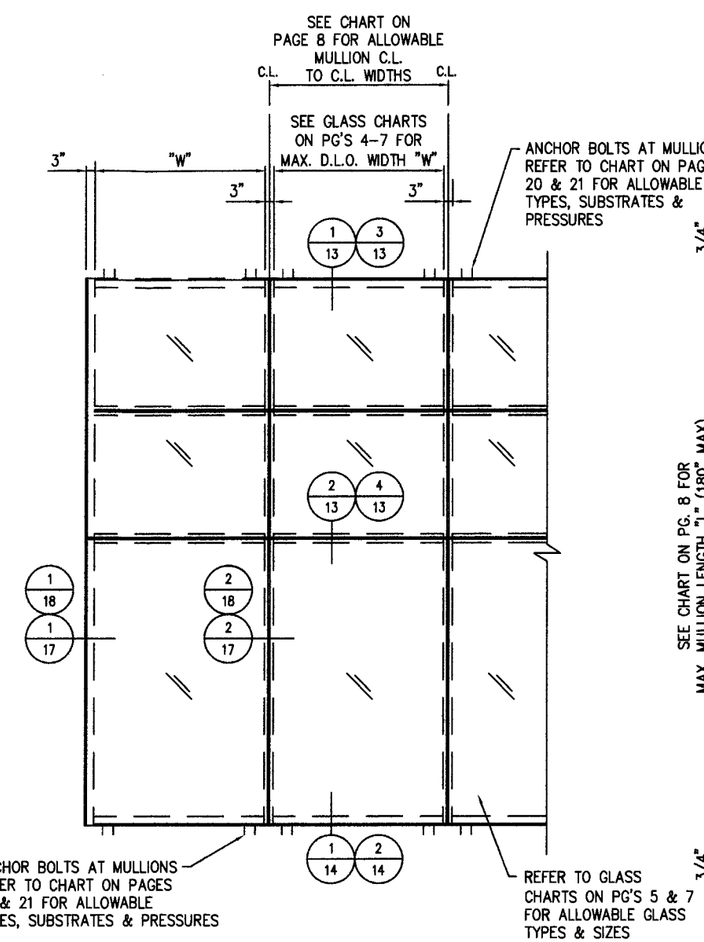

2/3 ELEVATION (VIEWED FROM EXTERIOR)
STRUCTURALLY GLAZED OPTION

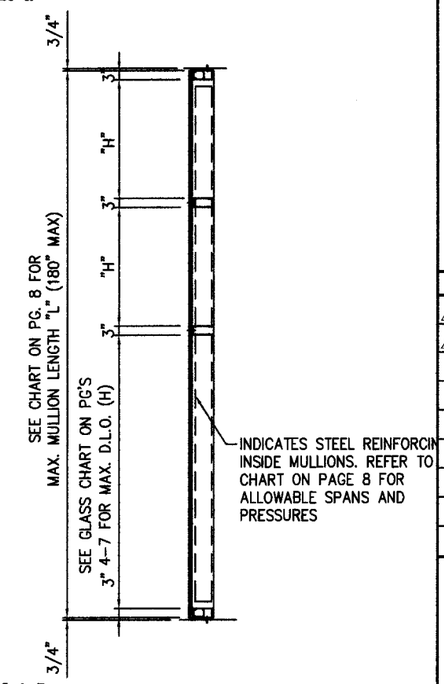

3/3 TYPICAL SECTION

NOTES:

1: DETERMINE DESIGN WIND LOAD REQUIREMENT BASED ON WIND VELOCITY, BLDG. HEIGHT, WIND ZONE. USING APPLICABLE ASCE 7 STANDARDS.

2: SEE CHARTS ON SHEETS 4-7 FOR ALLOWABLE DESIGN LOAD CAPACITY FOR DESIRED GLASS SIZE.

3: SEE CHARTS ON SHEET 8 FOR ALLOWABLE DESIGN LOAD CAPACITY OF MULLION HEIGHTS AND MODULE WIDTHS. THE CAPACITY SHOULD EQUAL OR EXCEED THE DESIGN LOAD GIVEN FOR THE SPECIFIC PROJECT.

4: SEE CHARTS ON SHEETS 20 & 21 TO SELECT ANCHOR OPTION AND SUBSTRATE WITH CAPACITY EQUAL TO OR GREATER THAN DESIGN LOAD GIVEN FOR THE SPECIFIC PROJECT.

5. LOWEST VALUE OF ALL CHARTS SHALL APPLY FOR THE ENTIRE ASSEMBLY

NOTE:

FOR STRUCTURALLY GLAZED SYSTEM OPTION, SEE FLORIDA BUILDING CODE SECTION 2415 FOR REQUIREMENTS.

FOR MIAMI-DADE CO. B.C.C.O.

Approved as complying with the Florida Building Code
Date SEPT. 9, 2014
NOA# 09-0915.15
Miami Dade Product Control Division
By Manuel Perez

enclos corp

2770 Blue Water Road
Eagan, MN 55121-1400
Tel. 651-796-6100 • Fax 651-994-6360
Engineering Locations
Eagan, MN • Montreal, QC, CA • Moncton, NB, CA
St. Louis, MO • Manila, PH

REVISIONS

1	7/5/2009 KEY'S PER M.D.B.C.C.O.
2	7/22/2009 FINAL REVISIONS

SEAL:

AUG 17 2009

Reviewed For Structural Integrity Only

BROMLEY • COOK ENGINEERING, INC.
STRUCTURAL ENGINEERING SERVICES
5440 N.W. 33RD AVENUE SUITE 100
FORT LAUDERDALE, FLORIDA 33309
TEL: (954) 772-4624 FAX: (954) 772-4634
CERT. OF AUTH. #00009124
WILLIAM D. COOK P.E.
FLA P.E. # 43904
FLA S.I. # 2008

Date	Scale
7/31/08	

Drawing No.
7030 SS SMI

Drawing Title
7030 SERIES WINDOW WALL SINGLE SPAN SMALL MISSILE IMPACT

Sheet No.
3/25

CAPTURED SYSTEM (9/16" GLASS)

MAX. DESIGN PRESSURES (P.S.F.) FOR VARIOUS GLASS TYPES

GLASS WD. D.L.O.	GLASS HGT. D.L.O.	GLASS TYPES (MONOLITHIC LAMINATED – SMALL MISSILE IMPACT) I	II	M
48" 52" 54" 57"	60"	+90, −90	+110, −130	+90, −90
48" 52" 54" 57"	72"			
48" 52" 54" 57"	78"			
48" 52" 54" 57"	84"			
48" 52" 54" 57"	90"	+90, −90	+110, −130	+90, −90

TESTED GLASS (MONOLITHIC):		
I	57" X 90"	+90 / −90
II	57" X 90"	+110 / −130
M	57" X 90"	+90 / −90

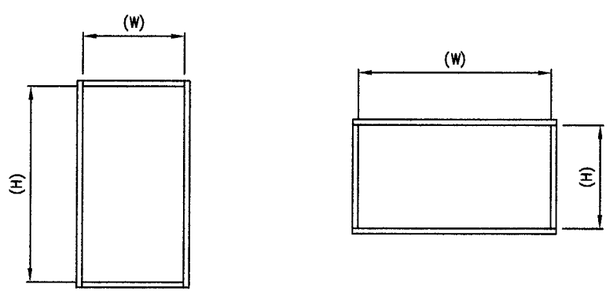

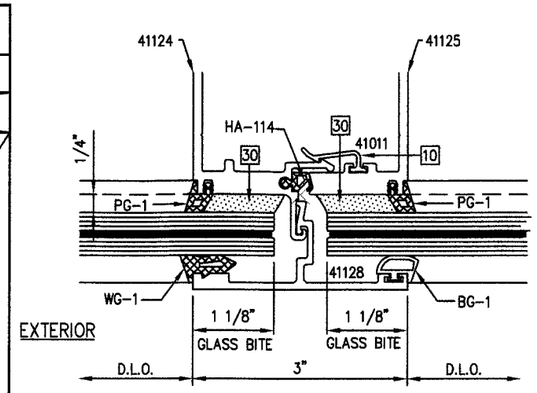

1/4 GLAZING DETAIL
9/16" CAPTURED GLASS
@ TYP. VERTICAL MULLION

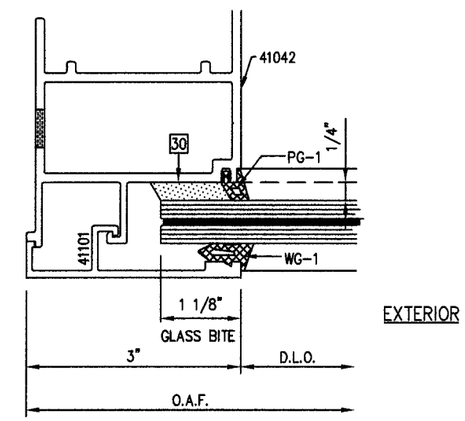

2/4 GLAZING DETAIL
9/16" CAPTURED GLASS @ JAMB

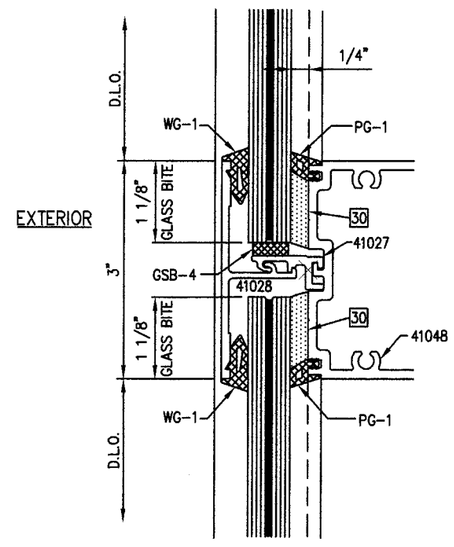

3/4 GLAZING DETAIL
9/16" CAPTURED GLASS
@ INTERMEDIATE HORIZONTAL

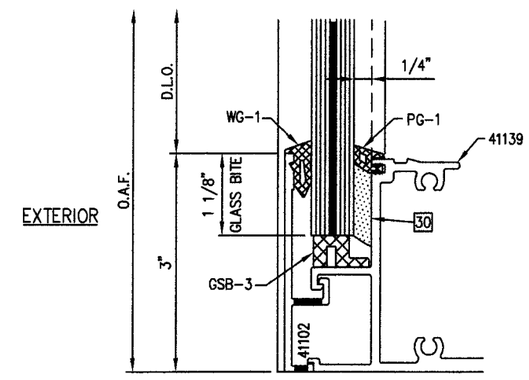

4/4 GLAZING DETAIL
9/16" CAPTURED GLASS
TYP. @ HEAD & SILL

FOR MIAMI-DADE CO. B.C.C.O.

Approved as complying with the Florida Building Code
Date SEPT. 9, 2014
NOA# 08-0915.15
Miami Dade Product Control Division
By Manuel Perez

enclos corp
2770 Blue Water Road
Eagan, MN 55121-1400
Tel. 651-796-6100 • Fax 651-994-6360
Engineering Locations
Eagan, MN • Montreal, QC, CA • Moncton, NB, CA
St. Louis, MO • Manila, PH

REVISIONS

1	7/5/2009 REV'S PER M.D.B.C.C.O.
2	7/22/2009 FINAL REVISIONS

SEAL:

AUG 17 2009

Reviewed For Structural Integrity Only

BROMLEY · COOK ENGINEERING, INC.
STRUCTURAL ENGINEERING SERVICES
5440 N.W. 33RD AVENUE SUITE 100
FORT LAUDERDALE, FLORIDA 33309
TEL: (954) 772-4624 FAX: (954) 772-4634
CERT. OF AUTH. #00009124
WILLIAM D. COOK P.E.
FLA P.E. # 43904
FLA S.I. # 2008

Date 7/31/08
Scale

Drawing No.
7030 SS SMI

Drawing Title
7030 SERIES WINDOW WALL
SINGLE SPAN
SMALL MISSILE IMPACT

Sheet No.
4/25

STRUCTURALLY GLAZED SYSTEM (9/16" GLASS)

TESTED GLASS (MONOLITHIC):		
I	57" X 90"	+90 / −90
II	57" X 90"	+110 / −130
M	57" X 90"	+90 / −90

MAX. DESIGN PRESSURES (P.S.F.) FOR VARIOUS GLASS TYPES

GLASS WD. D.L.O.	GLASS HGT. D.L.O.	GLASS TYPES (MONOLITHIC LAMINATED – S.M.I.) I	II	M
48" 52" 54" 57"	60"	+90, −90	+110, −130	+90, −90
48" 52" 54" 57"	72"			
48" 52" 54" 57"	78"			
48" 52" 54" 57"	84"			
48" 52" 54" 57"	90"	+90, −90	+110, −130	+90, −90

SILICONE SEAL WIDTH REQ'D. FOR STRUCTURAL GLAZING

GLASS WIDTH (D.L.O. MAX.)	WIND PRESSURE (MAX.)	SEAL WIDTH REQ'D. (MIN.)	MULLION WIDTH REQ'D. (MIN.)
40"	130	7/8"	STANDARD 3" WIDE MULLION
44"	120	7/8"	STANDARD 3" WIDE MULLION
48"	110	7/8"	STANDARD 3" WIDE MULLION
52"	100	7/8"	STANDARD 3" WIDE MULLION
57"	90	7/8"	STANDARD 3" WIDE MULLION
57"	130	1 3/8"	4" WIDE MULLION

DOW CORNING 983 OR 995 STRUCTURAL SILICONE SEALANT

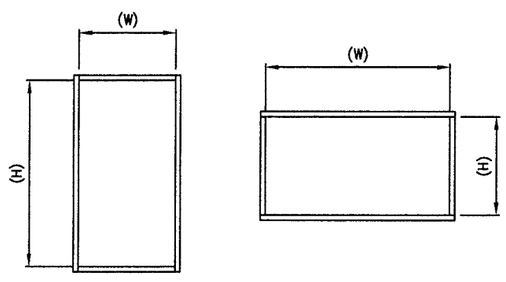

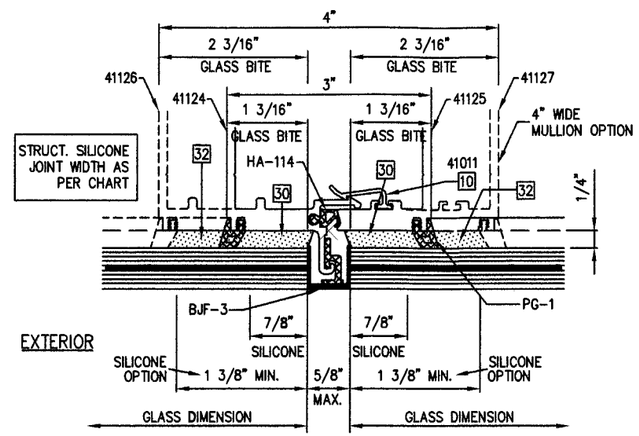

1/5 GLAZING DETAIL (BUTT JT. W/ GASKET)
9/16" STRUCTURAL GLAZED
@ TYP. VERTICAL MULLION

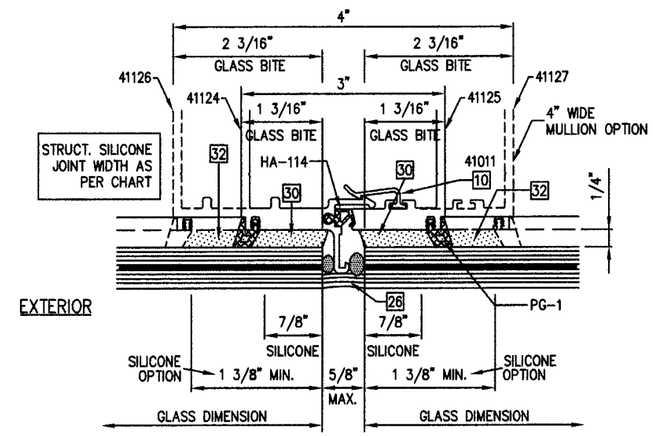

2/5 GLAZING DETAIL (SILICONE BUTT JT.)
9/16" STRUCTURAL GLAZED
@ TYP. VERTICAL MULLION

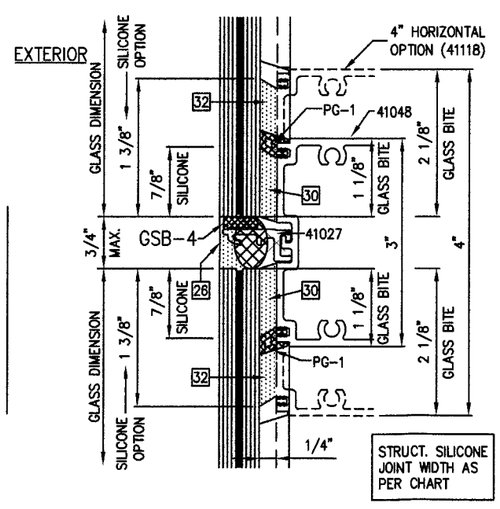

3/5 GLAZING DETAIL (SILICONE BUTT JT.)
9/16" STRUCTURAL GLAZED
@ INTERMEDIATE HORIZONTAL

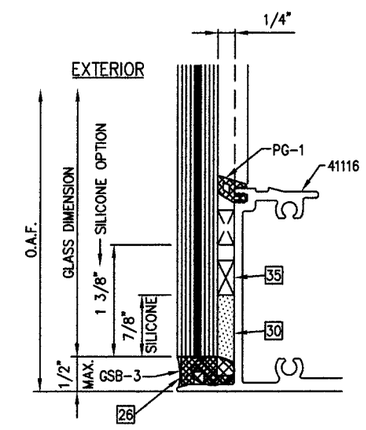

4/5 GLAZING DETAIL
9/16" STRUCTURAL GLAZED
TYP. @ HEAD & SILL

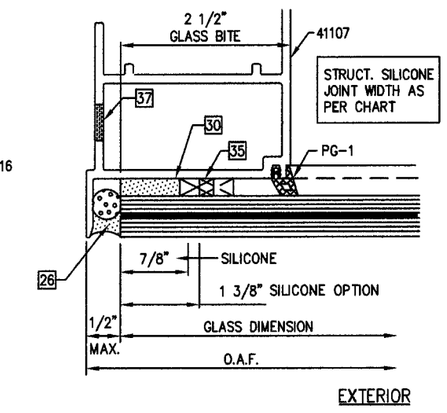

5/5 GLAZING DETAIL
9/16" STRUCTURAL GLAZED
@ JAMB

FOR MIAMI-DADE CO. B.C.C.O.

Approved as complying with the Florida Building Code
Date SEPT 9, 2014
NOA# 08-0915.15
Miami Dade Product Control Division
By Manuel Perez

enclos corp
2770 Blue Water Road
Eagan, MN 55121-1400
Tel. 651-796-6100 • Fax 651-994-6360
Engineering Locations
Eagan, MN • Montreal, QC, CA • Moncton, NB, CA
St. Louis, MO • Manila, PH

REVISIONS

1	7/5/2009 REV'S PER M.D.B.C.C.O.
2	7/22/2009 FINAL REVISIONS

SEAL:

AUG 17 2009
Reviewed For Structural Integrity Only

BROMLEY · COOK ENGINEERING, INC.
STRUCTURAL ENGINEERING SERVICES
5440 N.W. 33RD AVENUE SUITE 100
FORT LAUDERDALE, FLORIDA 33309
TEL: (954) 772-4624 FAX: (954) 772-4634
CERT. OF AUTH. #00009124
WILLIAM D. COOK P.E.
FLA P.E. # 43904
FLA S.I. # 2008

Date	Scale
7/31/08	

Drawing No.
7030 SS SMI

Drawing Title
7030 SERIES WINDOW WALL
SINGLE SPAN
SMALL MISSILE IMPACT

Sheet No.
5/25

CAPTURED SYSTEM (1 3/8" GLASS)

TESTED GLASS (INSULATED):		
J	57" X 90"	+90 / −90
Jt	57" X 90"	+110 / −130

MAX. DESIGN PRESSURES (P.S.F.) FOR VARIOUS GLASS TYPES

GLASS WD. D.L.O.	GLASS HGT. D.L.O.	GLASS TYPES (LAMINATED/INSULATED – SMALL MISSILE IMPACT) J	Jt
48" 52" 54" 57"	60"	+90, −90	+110, −130
48" 52" 54" 57"	72"		
48" 52" 54" 57"	78"		
48" 52" 54" 57"	84"		
48" 52" 54" 57"	90"	+90, −90	+110, −130

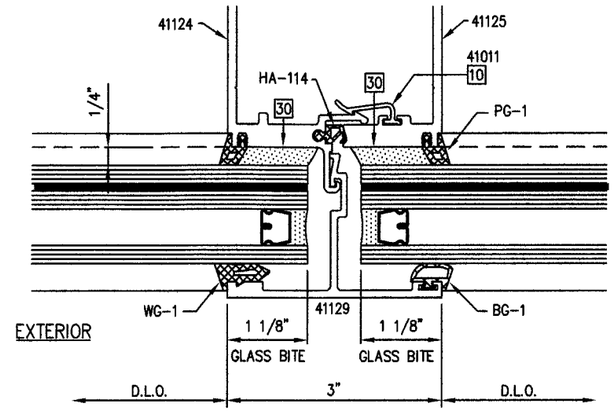

1/6 GLAZING DETAIL
1 3/8" CAPTURED GLASS
@ TYP. VERTICAL MULLION

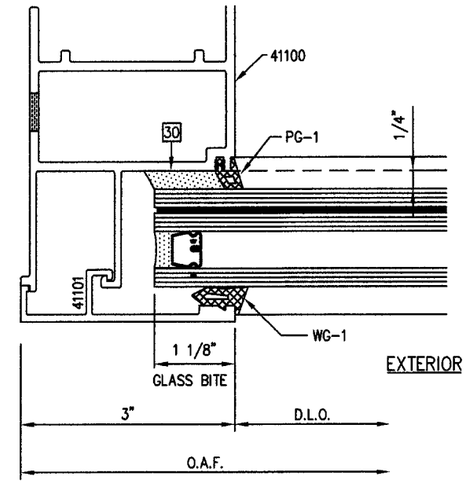

2/6 GLAZING DETAIL
1 3/8" CAPTURED GLASS @ JAMB

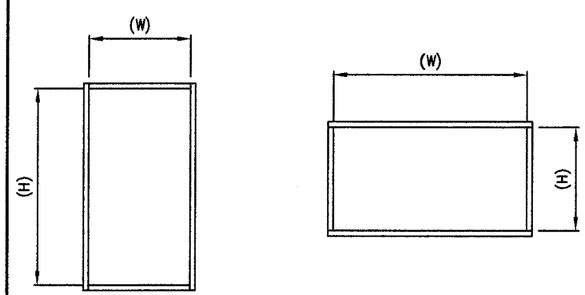

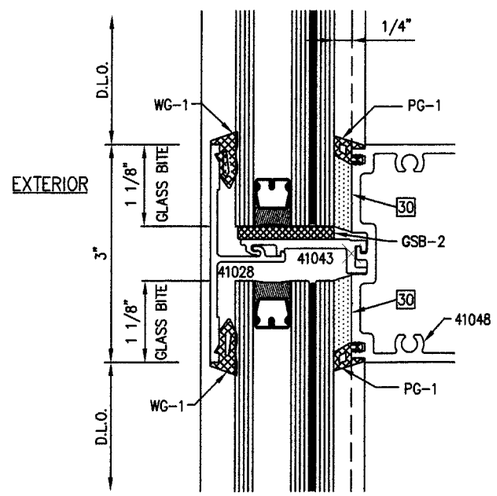

3/6 GLAZING DETAIL
1 3/8" CAPTURED GLASS
@ INTERMEDIATE HORIZONTAL

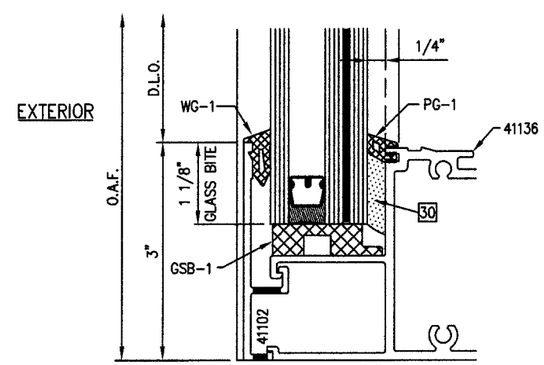

4/6 GLAZING DETAIL
1 3/8" CAPTURED GLASS
TYP. @ HEAD & SILL

FOR MIAMI-DADE CO. B.C.C.O.

Approved as complying with the Florida Building Code
Date SEPT 9 2014
NOA# 08-0915.15
Miami Dade Product Control Division
By Manuel Perez

enclos corp

2770 Blue Water Road
Eagan, MN 55121-1400
Tel. 651-796-6100 • Fax 651-994-6360
Engineering Locations
Eagan, MN • Montreal, QC, CA • Moncton, NB, CA
St. Louis, MO • Manila, PH

REVISIONS
1 7/6/2009 REV'S PER M.D.B.C.C.O.
2 7/22/2009 FINAL REVISIONS

SEAL:
AUG 17 2009
Reviewed For Structural Integrity Only

BROMLEY · COOK ENGINEERING, INC.
STRUCTURAL ENGINEERING SERVICES
5440 N.W. 33RD AVENUE SUITE 100
FORT LAUDERDALE, FLORIDA 33309
TEL: (954) 772-4624 FAX: (954) 772-4634
CERT. OF AUTH. #00009124
WILLIAM D. COOK P.E.
FLA P.E. # 43904
FLA S.I. # 2008

Date	Scale
7/31/08	

Drawing No.
7030 SS SMI

Drawing Title
7030 SERIES WINDOW WALL
SINGLE SPAN
SMALL MISSILE IMPACT

Sheet No.
6/25

STRUCTURALLY GLAZED SYSTEM (1 3/8" GLASS)

TESTED GLASS (INSULATED):		
J	57" X 90"	+90 / -90
Jt	57" X 90"	+110 / -130

MAX. DESIGN PRESSURES (P.S.F.) FOR VARIOUS GLASS TYPES

GLASS WD. D.L.O.	GLASS HGT. D.L.O.	GLASS TYPES (LAMINATED/INSULATED - SMALL MISSILE IMPACT)		
		J	Jt	
48" 52" 54" 57"	60"	+90, -90	+110, -130	
48" 52" 54" 57"	72"			
48" 52" 54" 57"	78"			
48" 52" 54" 57"	84"			
48" 52" 54" 57"	90"	+90, -90	+110, -130	

SILICONE SEAL WIDTH REQ'D. FOR STRUCTURAL GLAZING

GLASS WIDTH (D.L.O. MAX.)	WIND PRESSURE (MAX.)	SEAL WIDTH REQ'D. (MIN.)	MULLION WIDTH REQ'D. (MIN.)
40"	130	7/8"	STANDARD 3" WIDE MULLION
44"	120	7/8"	STANDARD 3" WIDE MULLION
48"	110	7/8"	STANDARD 3" WIDE MULLION
52"	100	7/8"	STANDARD 3" WIDE MULLION
57"	90	7/8"	STANDARD 3" WIDE MULLION
57"	130	1 3/8"	4" WIDE MULLION

DOW CORNING 983 OR 995 STRUCTURAL SILICONE SEALANT

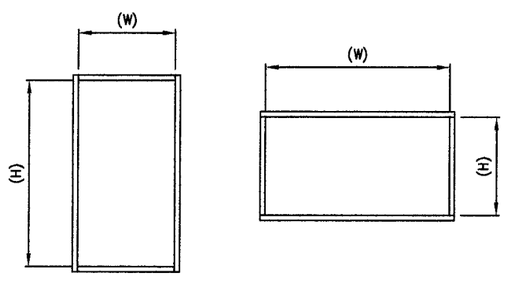

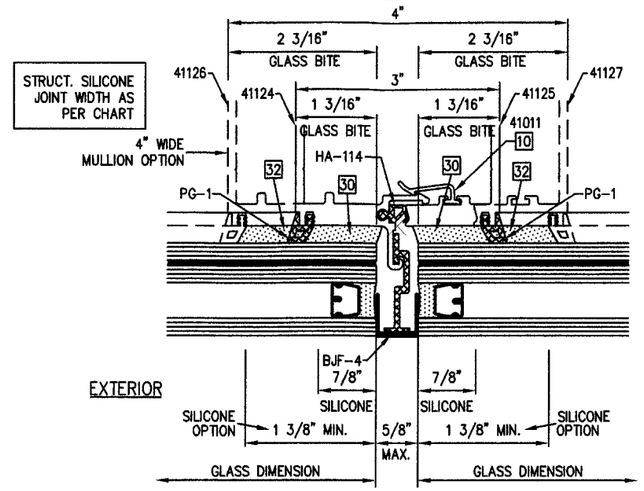

1/7 GLAZING DETAIL (BUTT JT. W/ GASKET)
1 3/8" STRUCTURAL GLAZED
@ TYP. VERTICAL MULLION

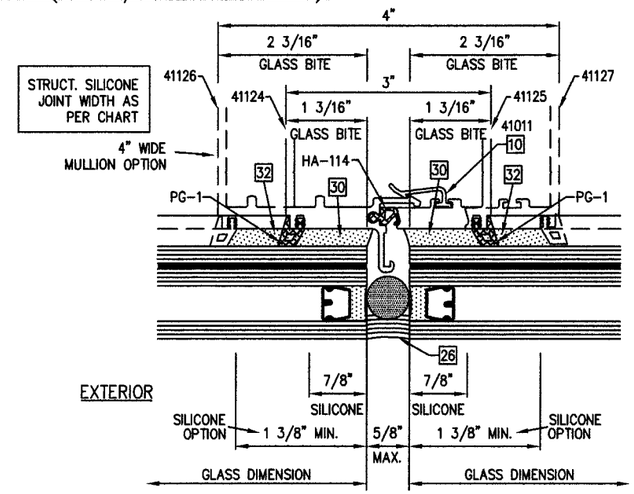

2/7 GLAZING DETAIL (SILICONE BUTT JOINT)
1 3/8" STRUCTURAL GLAZED
@ TYP. VERTICAL MULLION

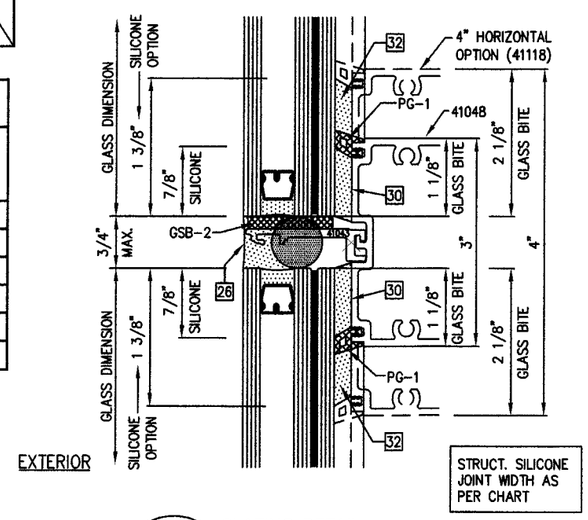

3/7 GLAZING DETAIL
1 3/8" STRUCTURAL GLAZED
@ INTERMEDIATE HORIZONTAL

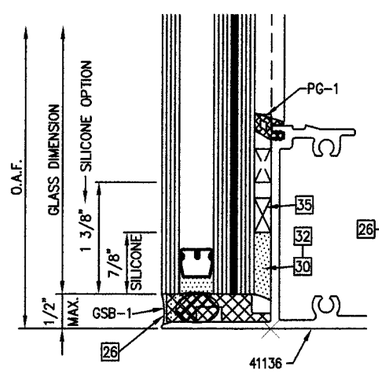

4/7 GLAZING DETAIL
1 3/8" STRUCTURAL GLAZED
@ TYP. SILL

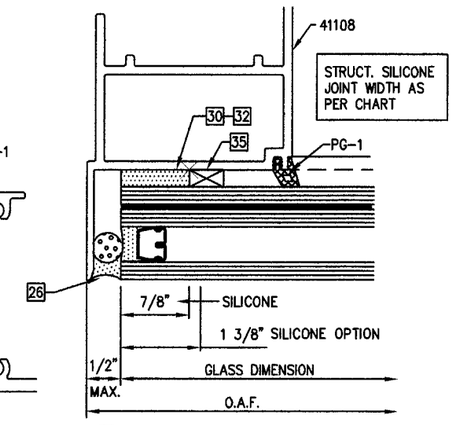

5/7 GLAZING DETAIL
1 3/8" STRUCTURAL GLAZED
@ JAMB

FOR MIAMI-DADE CO. B.C.C.O.

Approved as complying with the Florida Building Code
Date SEPT. 9, 2014
NOA# 08-0915.15
Miami Dade Product Control Division
By Manuel Perez

enclos corp

2770 Blue Water Road
Eagan, MN 55121-1400
Tel. 651-796-6100 • Fax 651-994-6380
Engineering Locations
Eagan, MN • Montreal, QC, CA • Moncton, NB, CA
St. Louis, MO • Manila, PH

REVISIONS
1 7/5/2009 REV'S PER M.D.B.C.C.O.
2 7/22/2009 FINAL REVISIONS

SEAL:
AUG 17 2009
Reviewed For Structural Integrity Only

BROMLEY • COOK ENGINEERING, INC.
STRUCTURAL ENGINEERING SERVICES
5440 N.W. 33RD AVENUE SUITE 100
FORT LAUDERDALE, FLORIDA 33309
TEL: (954) 772-4624 FAX: (954) 772-4634
CERT. OF AUTH. #00009124
WILLIAM D. COOK P.E.
FLA P.E. # 43904
FLA S.I. # 2008

Date	Scale
7/31/08	

Drawing No.
7030 SS SMI

Drawing Title
7030 SERIES WINDOW WALL
SINGLE SPAN
SMALL MISSILE IMPACT

Sheet No.
7/25

MAX. DESIGN PRESSURES (P.S.F.) FOR VARIOUS MULLION OPTIONS

MODULE WD. "W" C.L. TO C.L.	MULLION HGT. "H"	MULLION OPTIONS						
		MULLION TYPE #1	MULLION TYPE #2	MULLION TYPE #3	MULLION TYPE #4	JAMB TYPE #5	JAMB TYPE #6	JAMB TYPE #7
54" 57" 60" 64" 68" 71"	96"	+130, −130	+130, −130	+90, −143	+118, −118	+130, −130	+90, −143	+118, −118
54" 57" 60" 64" 68" 71"	102"							
54" 57" 60" 64" 68" 71"	114"							
54" 57" 60" 64" 68" 71"	120"	+130, −130 +125, −125 +125, −125 +115, −115 +110, −110 +110, −110	+130, −130 +130, −130 +130, −130 +125, −125 +120, −120 +120, −120			+130, −130 +125, −125 +125, −125 +115, −115 +110, −110 +110, −110		
54" 57" 60" 64" 68" 71"	132"							
54" 57" 60" 64" 68" 71"	144"			+90, −143 +90, −143 +90, −140 +90, −131 +90, −123 +90, −118			+90, −143	
54" 57" 60" 64" 68" 71"	180"				+118, −118 +110, −110 +106, −106 +99, −99 +93, −93 +90, −90			+118, −118 +118, −118 +118, −118 +118, −118 +118, −118 +118, −118

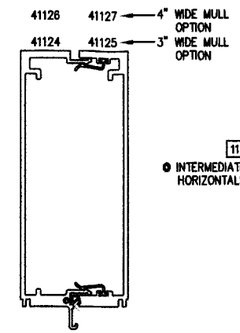

MULLION TYPE #1
NO REINFORCING
ALUMINUM Ixx = 25.33in^4
Sxx = 6.78in^3
(3" WIDE MULLION)
ALUMINUM Ixx = 31.17in^4
Sxx = 8.34in^3
(4" WIDE MULLION)

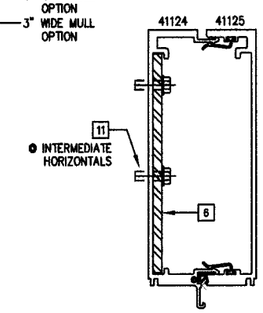

MULLION TYPE #2
41124/41125 (W/ STL. REINFORCING)
[6] 1/4" X 6" STEEL BAR (1 PCS.)
ALUMINUM Ixx = 38.38in^4
Sxx = 12.68in^3

NOTE:
TOTAL "I" VALUE IS ALUM. "Ix−x"
PLUS CONVERTED STEEL "Ix−x" VALUE

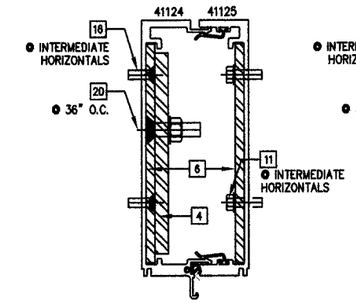

MULLION TYPE #3
41124/41125 (W/ STL. REINFORCING)
[6] 1/4" X 6" STEEL BAR (2 PCS.) &
[4] 3/8" X 5 1/2" STEEL BAR (1 PC.)
ALUMINUM Ixx = 64.50in^4
Sxx = 19.83in^3

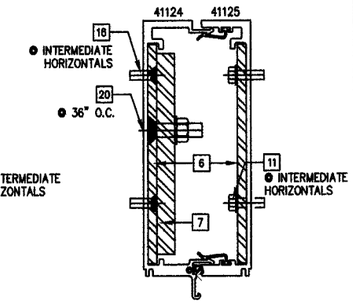

MULLION TYPE #4
41124/41125 (W/ STL. REINFORCING)
[6] 1/4" X 6" STEEL BAR (2 PCS.) &
[7] 1/2" X 5 1/2" STEEL BAR (1 PC.)
ALUMINUM Ixx = 71.54in^4
Sxx = 22.18in^3

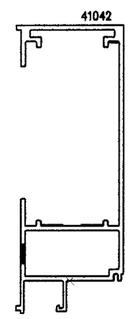

JAMB TYPE #5
NO REINFORCING
ALUMINUM Ixx = 20.68in^4
Sxx = 5.24in^3

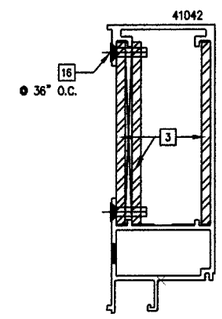

JAMB TYPE #6
41042 (W/ STL. REINFORCING)
[3] 1/4" X 5" STEEL BAR (3 PCS.)
ALUMINUM Ixx = 43.34in^4
Sxx = 14.31in^3

NOTE:
TOTAL "I" VALUE IS ALUM. "Ix−x"
PLUS CONVERTED STEEL "Ix−x" VALUE

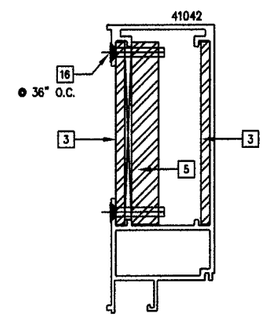

JAMB TYPE #7
41042 (W/ STL. REINFORCING)
[3] 1/4" X 5" STEEL BAR (2 PCS.) &
[5] 7/8" X 5" STEEL BAR (1 PC.)
ALUMINUM Ixx = 62.22in^4
Sxx = 21.85in^3

NOTE:
JAMB MULLIONS SHOWN HAVE THE LOWEST "I" VALUE. JAMB MULLION OPTIONS FOR CAPTURED GLASS OPTIONS (9/16" & 1 3/8" THICKNESS) ARE SHOWN ON EXTRUSION SHEET 23.

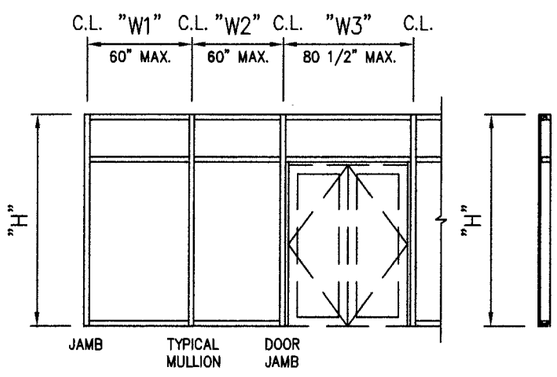

GENERAL NOTES:

- "H" = MAXIMUM MULLION SPAN
- "W1", "W2" & "W3" = C.L. TO C.L. SPACING
- JAMB "W" = $\frac{\text{"W1"}}{2}$
- MULLION "W" = $\frac{\text{"W1"} + \text{"W2"}}{2}$
- DOOR JAMB "W" = $\frac{\text{"W2"} + \text{"W3"}}{2}$
- FOR SINGLE SPAN MAXIMUM DEFL. = L/180 OR 1"
- WHEN STEEL REINF. IS USED, LENGTH OF STEEL SHALL BE MULLION LENGTH MINUS (−) 9" (CENTERED IN SPAN)
- SPANS ARE LIMITED BY MAXIMUM TESTED END REACTIONS

FOR MIAMI-DADE CO. B.C.C.O.

Approved as complying with the Florida Building Code
Date SEPT. 9, 2014
NOA# 09-0915.15
Miami Dade Product Control
Division
By Manuel Perez

enclos corp
2770 Blue Water Road
Eagan, MN 55121-1400
Tel. 651-798-6100 • Fax 651-994-6360
Engineering Locations
Eagan, MN • Montreal, QC, CA • Moncton, NB, CA
St. Louis, MO • Manila, PH

REVISIONS
1 7/5/2009 REV'S PER M.D.B.C.C.O.
2 7/22/2009 FINAL REVISIONS

SEAL:
AUG 17 2009
Reviewed For Structural Integrity Only

BROMLEY • COOK ENGINEERING, INC.
STRUCTURAL ENGINEERING SERVICES
5440 N.W. 33RD AVENUE SUITE 100
FORT LAUDERDALE, FLORIDA 33309
TEL: (954) 772-4624 FAX: (954) 772-4634
CERT. OF AUTH. #00009124
WILLIAM D. COOK P.E.
FLA P.E. # 43904
FLA S.I. # 2008

Date	Scale
7/31/08	

Drawing No.
7030 SS SMI

Drawing Title
7030 SERIES WINDOW WALL
SINGLE SPAN
SMALL MISSILE IMPACT

Sheet No.
8/25

PERIMETER SEALANT OPTIONS:
DOW-CORNING 790 SILICONE
DOW-CORNING 791 SILICONE
DOW-CORNING 795 SILICONE

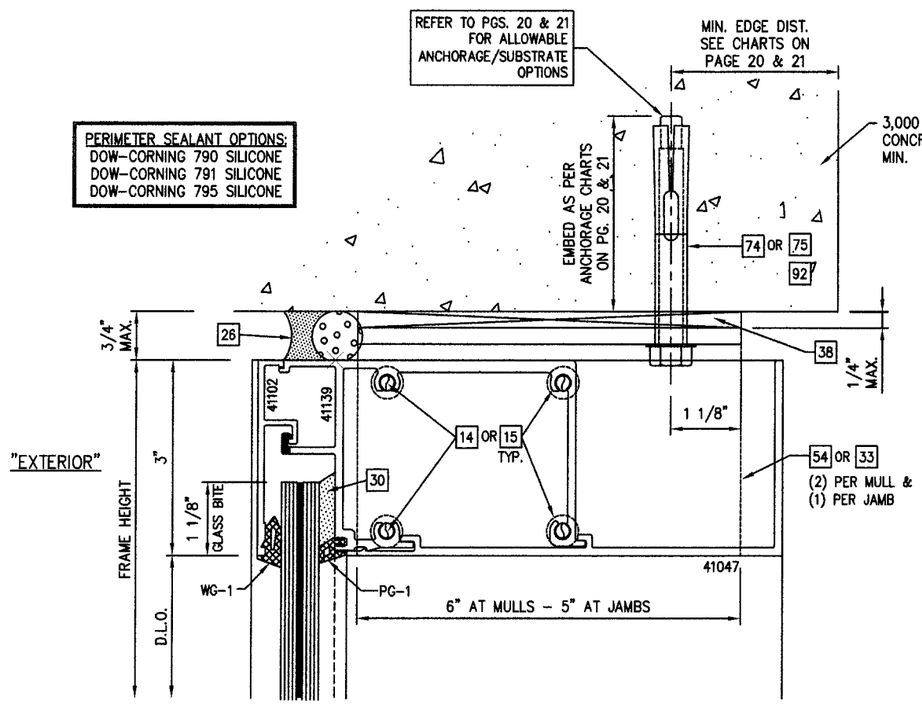

1/9 HEAD DETAIL - 9/16" CAPTURED GLASS WITH "L" CLIP ANCHORAGE OPTION

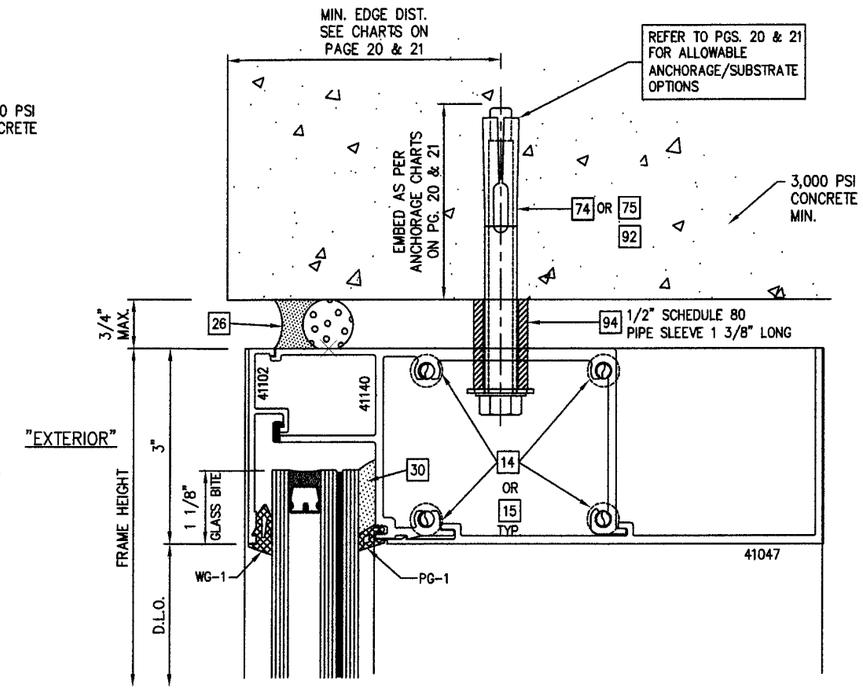

3/9 HEAD DETAIL - 1 3/8" CAPTURED GLASS WITH THRU CAN ANCHORAGE OPTION

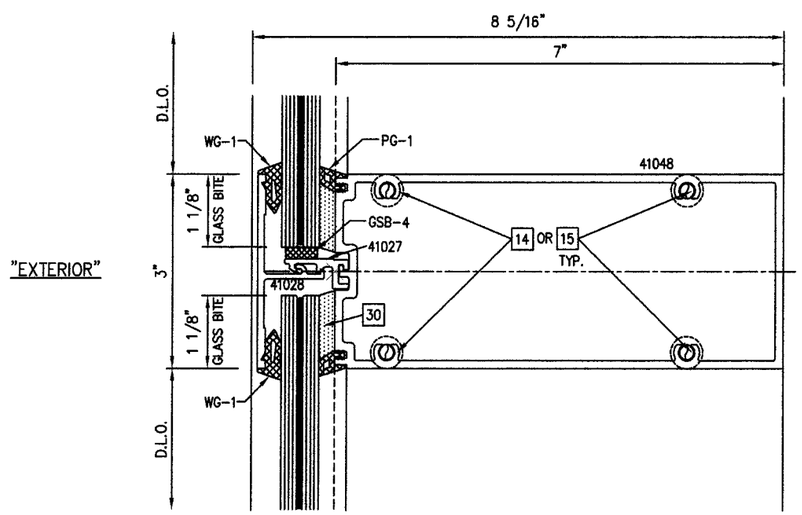

2/9 INTERMEDIATE HORIZONTAL DETAIL - 9/16" CAPTURED GLASS

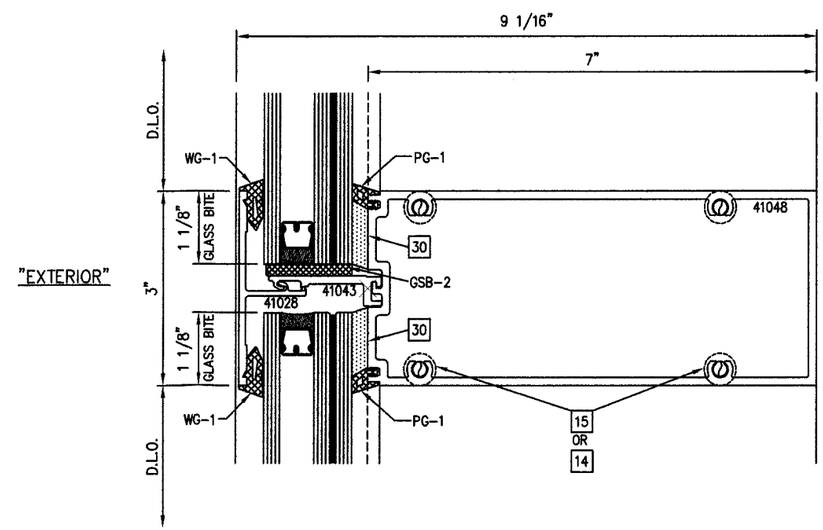

4/9 INTERMEDIATE HORIZONTAL DETAIL - 1 3/8" CAPTURED GLASS

FOR MIAMI-DADE CO. B.C.C.O.

Approved as complying with the Florida Building Code
Date SEPT. 9, 2014
NOA# 08-0915.15
Miami Dade Product Control Division
By Manuel Perez

enclos corp

2770 Blue Water Road
Eagan, MN 55121-1400
Tel. 651-796-6100 • Fax 651-994-6360
Engineering Locations
Eagan, MN • Montreal, QC, CA • Moncton, NB, CA
St. Louis, MO • Manila, PH

REVISIONS
1 7/5/2009 REV'S PER M.D.B.C.C.O.
2 7/22/2009 FINAL REVISIONS

SEAL:
AUG 17 2009
Reviewed For Structural Integrity Only

BROMLEY • COOK ENGINEERING, INC.
STRUCTURAL ENGINEERING SERVICES
5440 N.W. 33RD AVENUE SUITE 100
FORT LAUDERDALE, FLORIDA 33309
TEL: (954) 772-4624 FAX: (954) 772-4634
CERT. OF AUTH. #00009124
WILLIAM D. COOK P.E.
FLA P.E. # 43904
FLA S.I. # 2008

Date	Scale
7/31/08	

Drawing No.
7030 SS SMI

Drawing Title
7030 SERIES WINDOW WALL
SINGLE SPAN
SMALL MISSILE IMPACT

Sheet No.
9/25

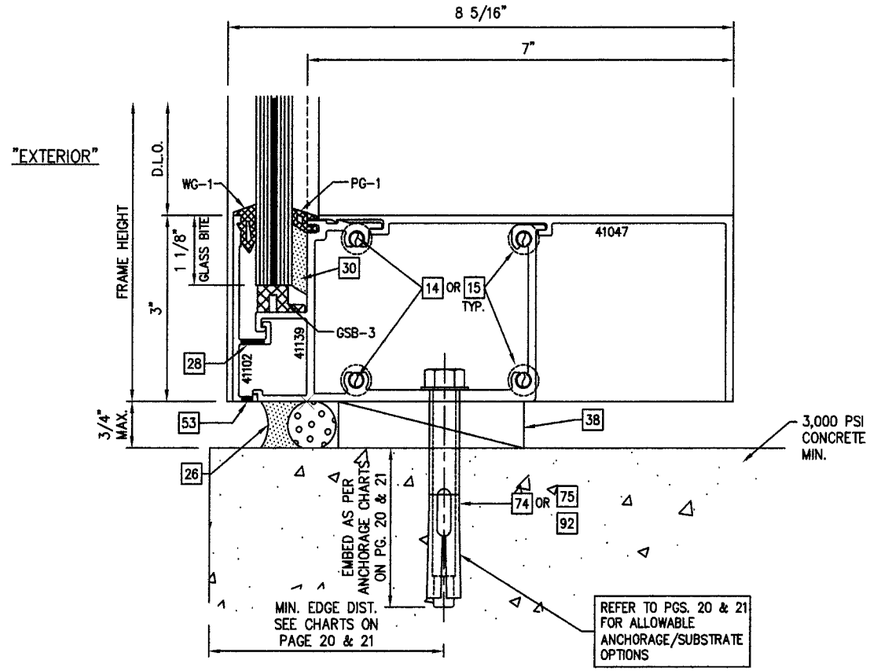

1/10 SILL DETAIL – 9/16" CAPTURED GLASS WITH THRU CAN ANCHORAGE OPTION

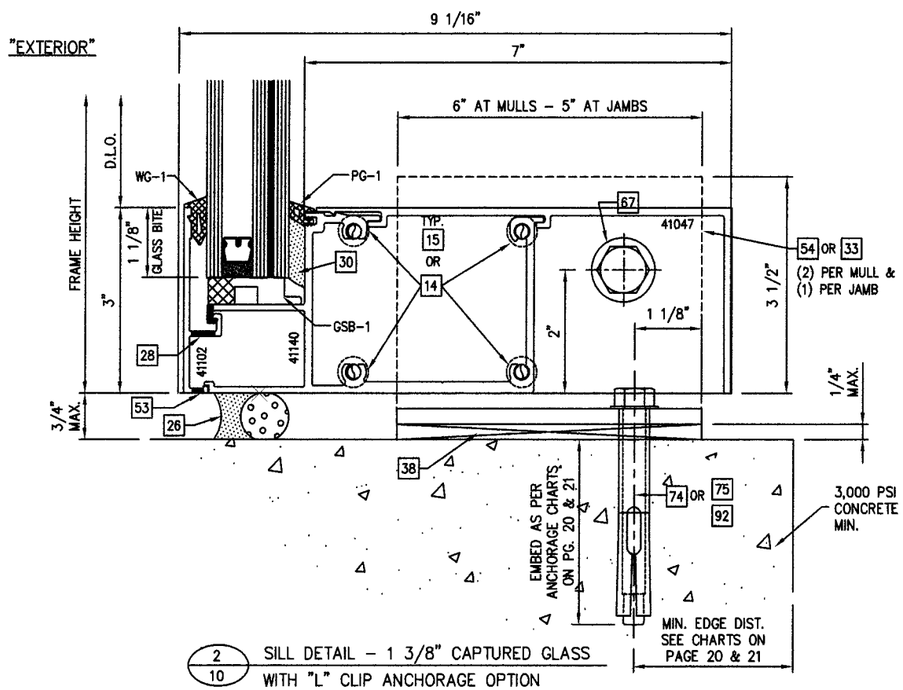

2/10 SILL DETAIL – 1 3/8" CAPTURED GLASS WITH "L" CLIP ANCHORAGE OPTION

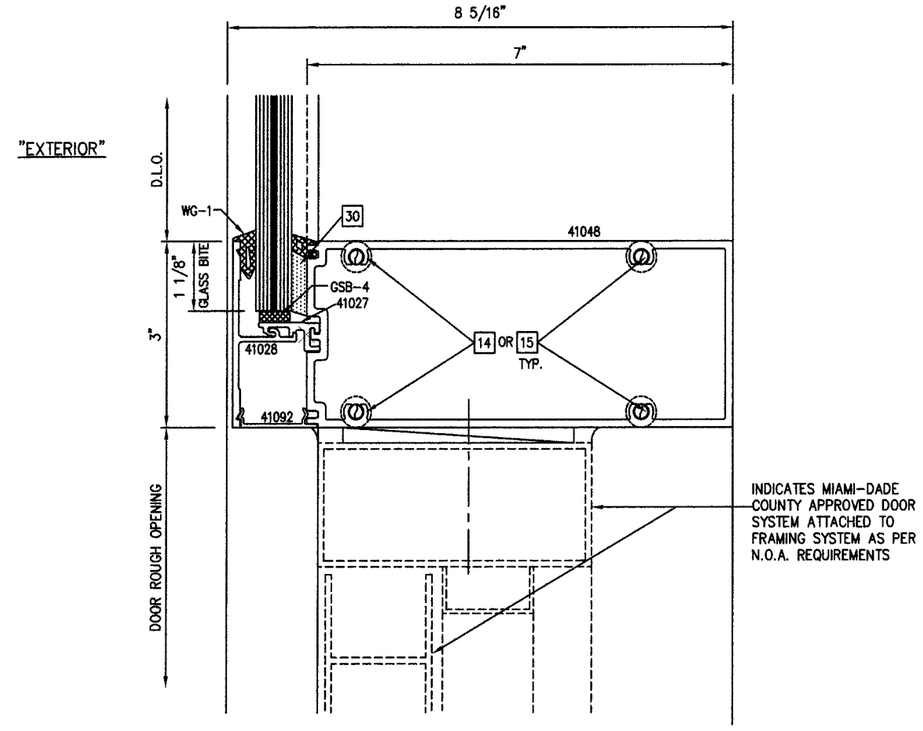

3/10 INTERMEDIATE RAIL DETAIL – 9/16" CAPTURED GLASS @ DOOR HEAD
1 3/8" GLASS SIMILAR

FOR MIAMI-DADE CO. B.C.C.O.

Approved as complying with the Florida Building Code
Date SEPT 9, 2014
NOA# 08-0915.15
Miami Dade Product Control Division
By Manuel Perez

enclos corp

2770 Blue Water Road
Eagan, MN 55121-1400
Tel. 651-796-6100 • Fax 651-994-6360
Engineering Locations
Eagan, MN • Montreal, QC, CA • Moncton, NB, CA
St. Louis, MO • Manila, PH

REVISIONS

1	7/5/2009 REV'S PER M.D.B.C.C.O.
2	7/22/2009 FINAL REVISIONS

SEAL:

AUG 17 2009

Reviewed For Structural Integrity Only

BROMLEY · COOK ENGINEERING, INC.
STRUCTURAL ENGINEERING SERVICES
5440 N.W. 33RD AVENUE SUITE 100
FORT LAUDERDALE, FLORIDA 33309
TEL: (954) 772-4624 FAX: (954) 772-4634
CERT. OF AUTH. #00009124
WILLIAM D. COOK P.E.
FLA P.E. # 43904
FLA S.I. # 2008

Date	Scale
7/31/08	

Drawing No.
7030 SS SMI

Drawing Title
7030 SERIES WINDOW WALL
SINGLE SPAN
SMALL MISSILE IMPACT

Sheet No.
10/25

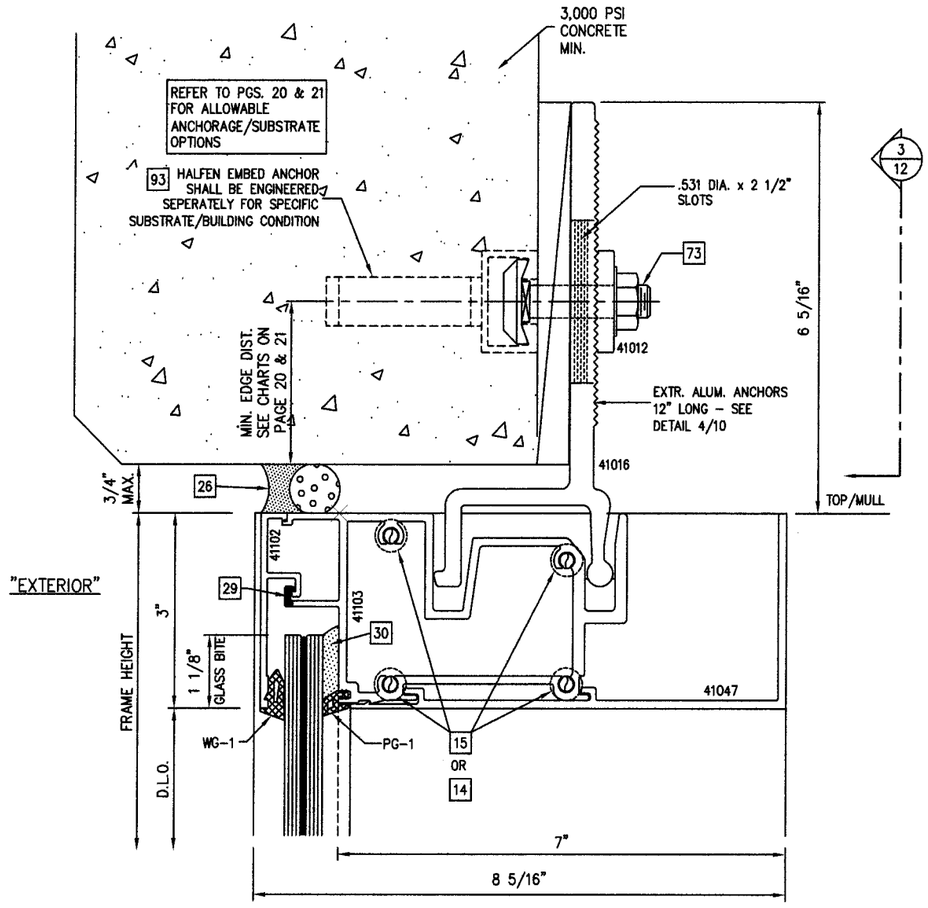

1/11 HEAD DETAIL – 9/16" CAPTURED GLASS WITH ALUM. STRAP ANCHORAGE OPTION

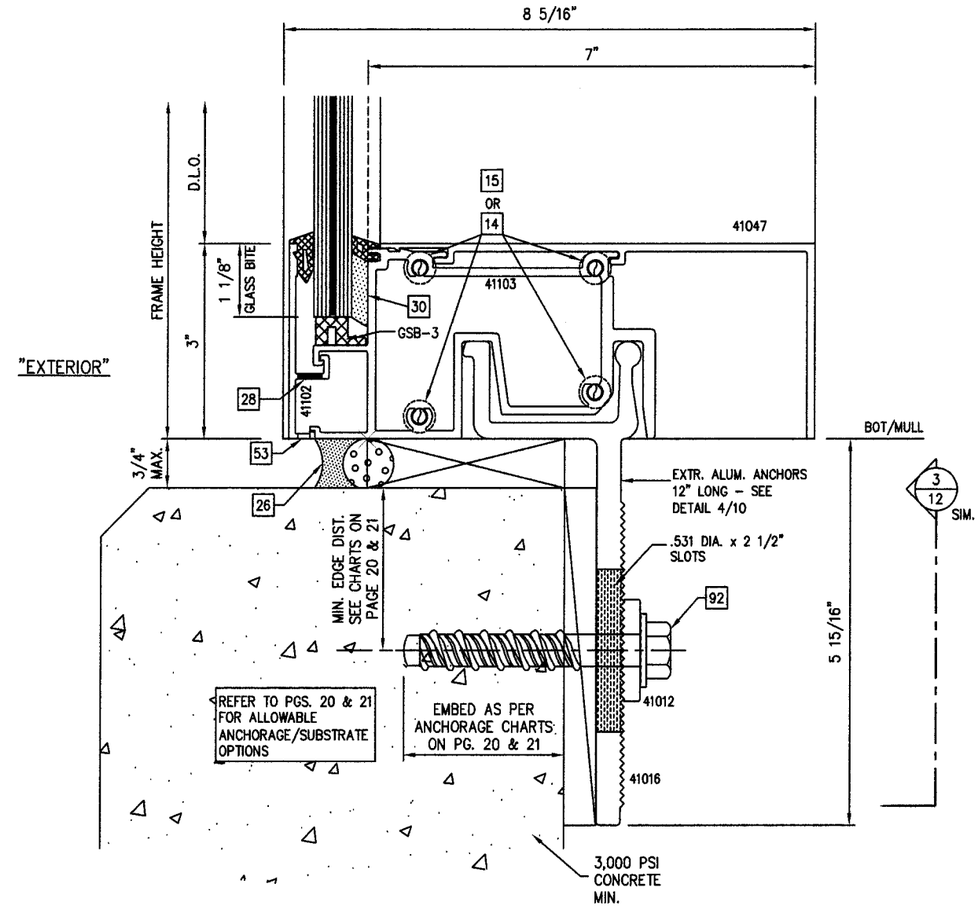

2/11 SILL DETAIL – 9/16" CAPTURED GLASS WITH ALUM. STRAP ANCHORAGE OPTION

FOR MIAMI-DADE CO. B.C.C.O.

Approved as complying with the Florida Building Code
Date SEPT. 9, 2014
NOA# 08-0415.15
Miami Dade Product Control Division
By

enclos corp

2770 Blue Water Road
Eagan, MN 55121-1400
Tel. 651-796-6100 • Fax 651-994-6360
Engineering Locations
Eagan, MN • Montreal, QC, CA • Moncton, NB, CA
St. Louis, MO • Manila, PH

REVISIONS

1	7/5/2009 REV'S PER M.D.B.C.C.O.
2	7/22/2009 FINAL REVISIONS

SEAL:

AUG 17 2009
Reviewed For Structural Integrity Only

BROMLEY • COOK ENGINEERING, INC.
STRUCTURAL ENGINEERING SERVICES
5440 N.W. 33RD AVENUE SUITE 100
FORT LAUDERDALE, FLORIDA 33309
TEL: (954) 772-4624 FAX: (954) 772-4634
CERT. OF AUTH. #00009124
WILLIAM D. COOK P.E.
FLA P.E. # 43904
FLA S.I. # 2008

Date	Scale
7/31/08	

Drawing No.
7030 SS SMI

Drawing Title
7030 SERIES WINDOW WALL
SINGLE SPAN
SMALL MISSILE IMPACT

Sheet No.
11/25

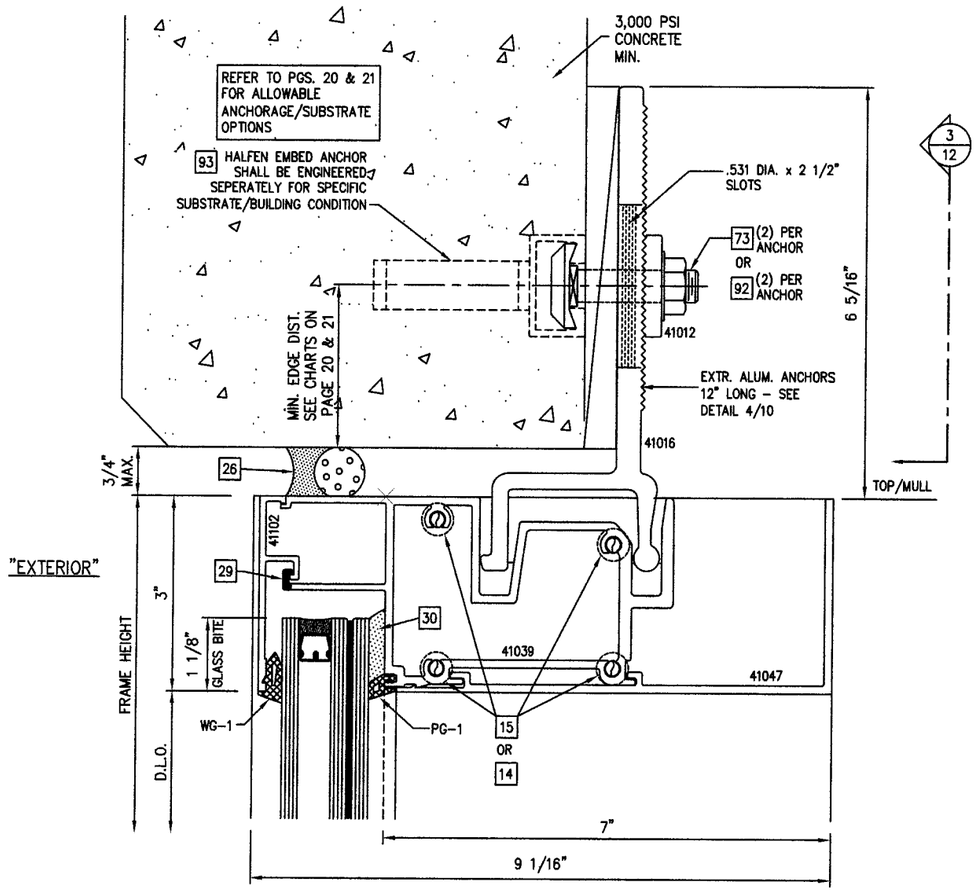

1/12 HEAD DETAIL – 1 3/8" CAPTURED GLASS
WITH ALUM. STRAP ANCHORAGE OPTION

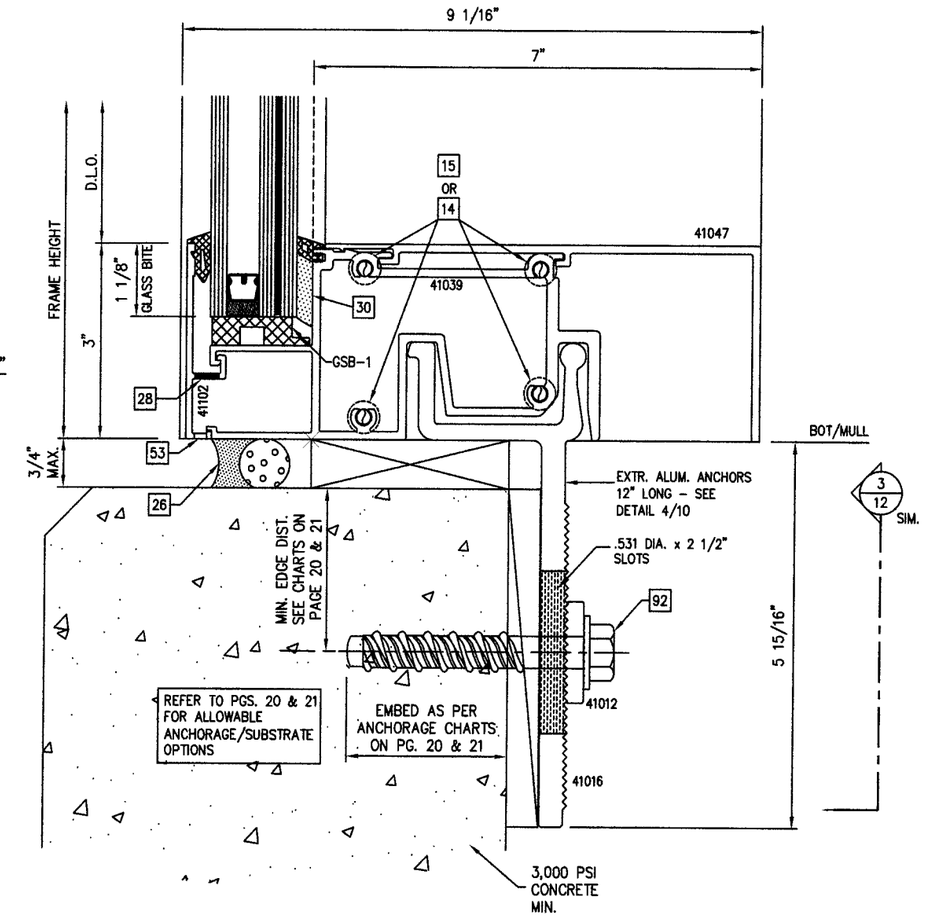

2/12 SILL DETAIL – 1 3/8" CAPTURED GLASS
WITH ALUM. STRAP ANCHORAGE OPTION

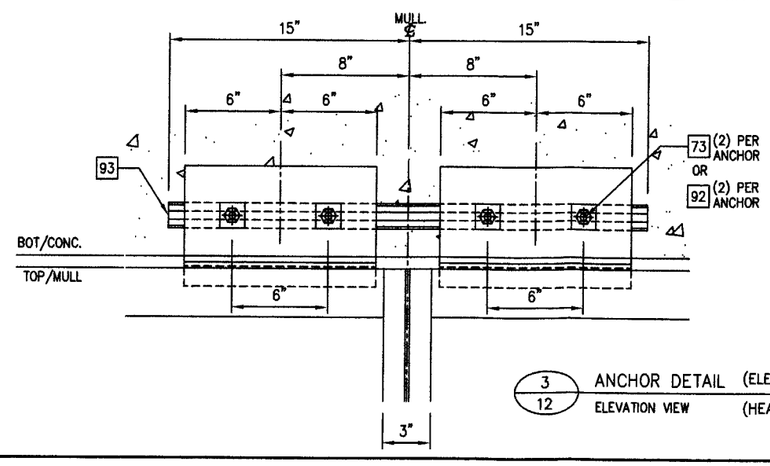

3/12 ANCHOR DETAIL (ELEVATION VIEWED FROM INTERIOR)
ELEVATION VIEW (HEAD SHOWN, SILL OPP.)

FOR MIAMI-DADE CO. B.C.C.O.

Approved as complying with the Florida Building Code
Date SEPT. 9, 2014
NOA# 08-0915.15
Miami Dade Product Control Division
By Manuel Gerez

enclos corp

2770 Blue Water Road
Eagan, MN 55121-1400
Tel. 651-796-6100 • Fax 651-994-6380
Engineering Locations
Eagan, MN • Montreal, QC, CA • Moncton, NB, CA
St. Louis, MO • Manila, PH

REVISIONS
1 7/5/2009 REV'S PER M.D.B.C.C.O.
2 7/22/2009 FINAL REVISIONS

SEAL:
AUG 17 2009
Reviewed For Structural Integrity Only

BROMLEY • COOK ENGINEERING, INC.
STRUCTURAL ENGINEERING SERVICES
5440 N.W. 33RD AVENUE SUITE 100
FORT LAUDERDALE, FLORIDA 33309
TEL: (954) 772-4624 FAX: (954) 772-4634
CERT. OF AUTH. #00009124
WILLIAM D. COOK P.E.
FLA P.E. # 43904
FLA S.I. # 2008

Date	Scale
7/31/08	

Drawing No.
7030 SS SMI

Drawing Title
7030 SERIES WINDOW WALL
SINGLE SPAN
SMALL MISSILE IMPACT

Sheet No.
12/25

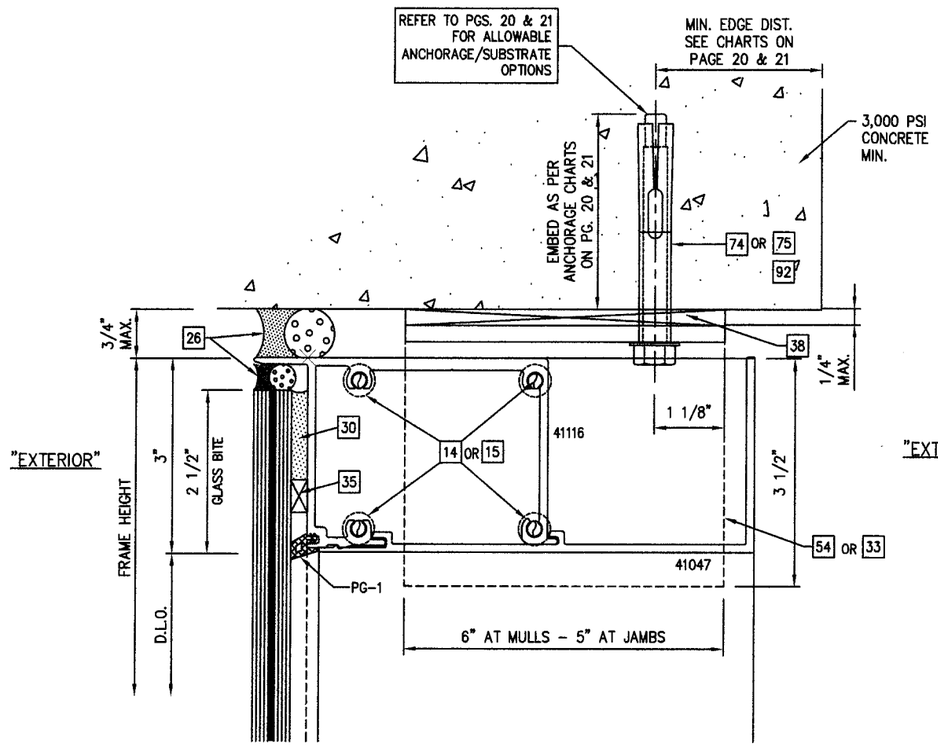

1/13 HEAD DETAIL – 9/16" STRUCTURALLY GLAZED GLASS WITH "L" CLIP ANCHORAGE OPTION

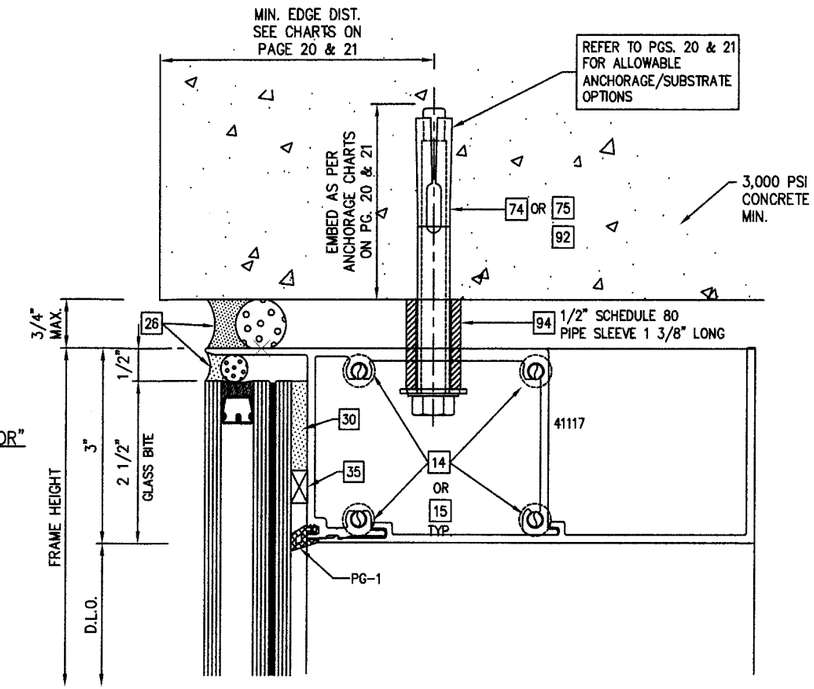

3/13 HEAD DETAIL – 1 3/8" STRUCTURALLY GLAZED GLASS WITH THRU CAN ANCHORAGE OPTION

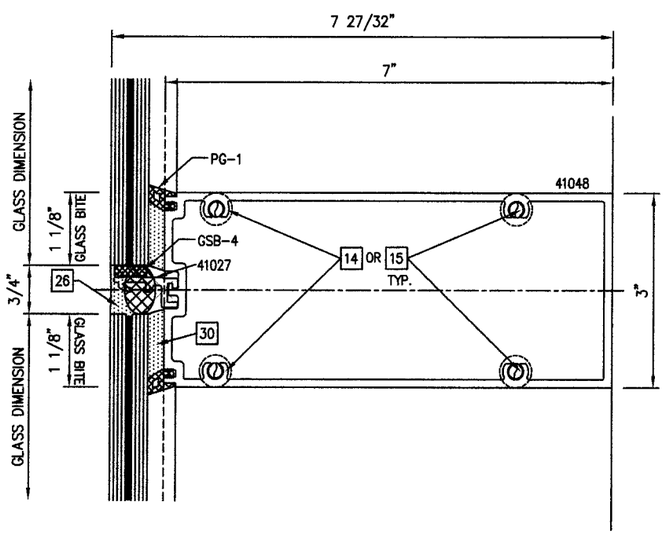

2/13 INTERMEDIATE HORIZONTAL DETAIL – 9/16" STRUCTURALLY GLAZED GLASS

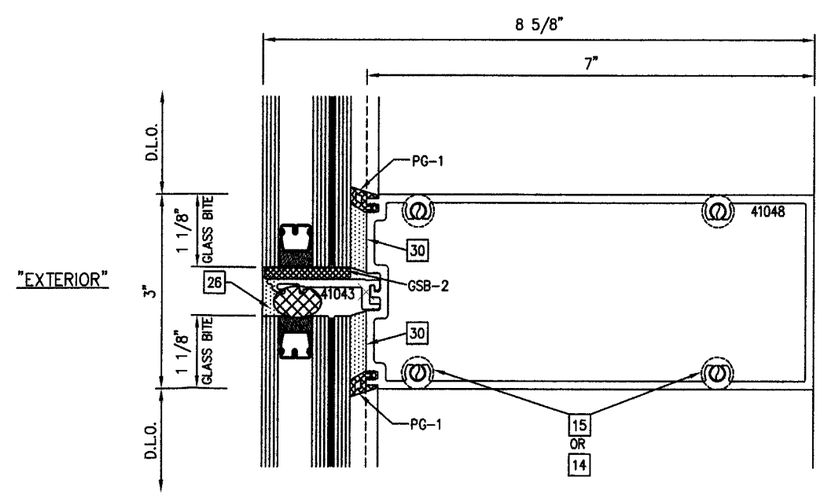

4/13 INTERMEDIATE HORIZONTAL DETAIL – 1 3/8" STRUCTURALLY GLAZED GLASS

FOR MIAMI-DADE CO. B.C.C.O.

Approved as complying with the Florida Building Code
Date SEPT. 9, 2014
NOA# 08.0915.15
Miami Dade Product Control Division
By Manuel Perez

enclos corp

2770 Blue Water Road
Eagan, MN 55121-1400
Tel. 651-796-6100 • Fax 651-994-6300
Engineering Locations
Eagan, MN • Montreal, QC, CA • Moncton, NB, CA
St. Louis, MO • Manila, PH

REVISIONS
1 7/5/2009 REV'S PER M.D.B.C.C.O.
2 7/22/2009 FINAL REVISIONS

SEAL:
AUG 17 2009
Reviewed For Structural Integrity Only

BROMLEY · COOK ENGINEERING, INC.
STRUCTURAL ENGINEERING SERVICES
5440 N.W. 33RD AVENUE SUITE 100
FORT LAUDERDALE, FLORIDA 33309
TEL. (954) 772-4624 FAX: (954) 772-4634
CERT. OF AUTH. #00009124
WILLIAM D. COOK P.E.
FLA P.E. # 43904
FLA S.I. # 2008

Date	Scale
7/31/08	

Drawing No.
7030 SS SMI

Drawing Title
7030 SERIES WINDOW WALL
SINGLE SPAN
SMALL MISSILE IMPACT

Sheet No.
13/25

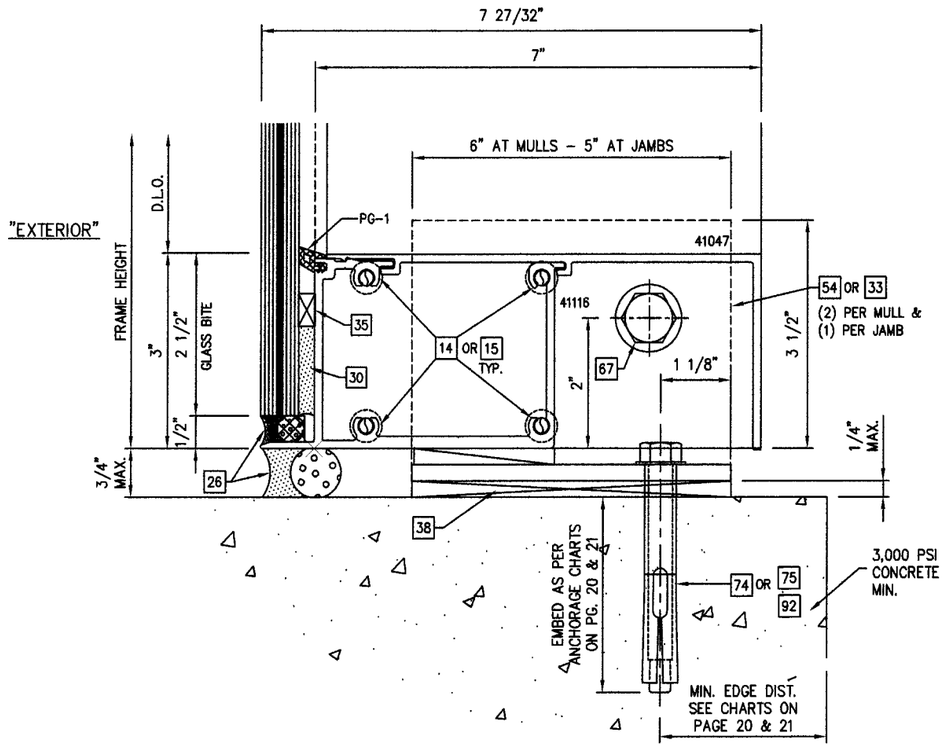

1/14 SILL DETAIL – 9/16" STRUCTURALLY GLAZED GLASS WITH "L" CLIP ANCHORAGE OPTION

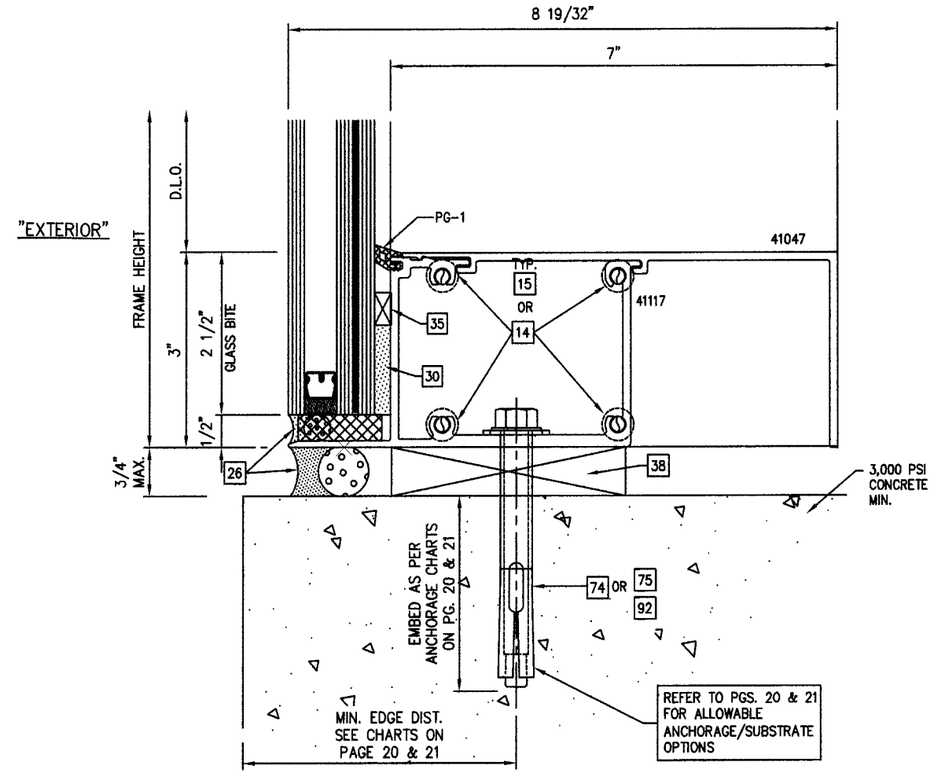

2/14 SILL DETAIL – 1 3/8" STRUCTURALLY GLAZED GLASS WITH "L" CLIP ANCHORAGE OPTION

FOR MIAMI-DADE CO. B.C.C.O.

Approved as complying with the Florida Building Code
Date SEPT. 9, 2014
NOA# 08-0915.15
Miami Dade Product Control Division
By Manuel Perez

enclos corp

2770 Blue Water Road
Eagan, MN 55121-1400
Tel. 651-796-6100 • Fax 651-994-6360
Engineering Locations
Eagan, MN • Montreal, QC, CA • Moncton, NB, CA
St. Louis, MO • Manila, PH

REVISIONS

1	7/5/2009 REV'S PER M.D.B.C.C.O.
2	7/22/2009 FINAL REVISIONS

SEAL:

AUG 07 2009
Reviewed For Structural Integrity Only

BROMLEY • COOK ENGINEERING, INC.
STRUCTURAL ENGINEERING SERVICES
5440 N.W. 33RD AVENUE SUITE 100
FORT LAUDERDALE, FLORIDA 33309
TEL: (954) 772-4624 FAX: (954) 772-4634
CERT. OF AUTH. #00009124
WILLIAM D. COOK P.E.
FLA P.E. # 43904
FLA S.I. # 2008

Date	Scale
7/31/08	

Drawing No.
7030 SS SMI

Drawing Title
7030 SERIES WINDOW WALL
SINGLE SPAN
SMALL MISSILE IMPACT

Sheet No.
14/25

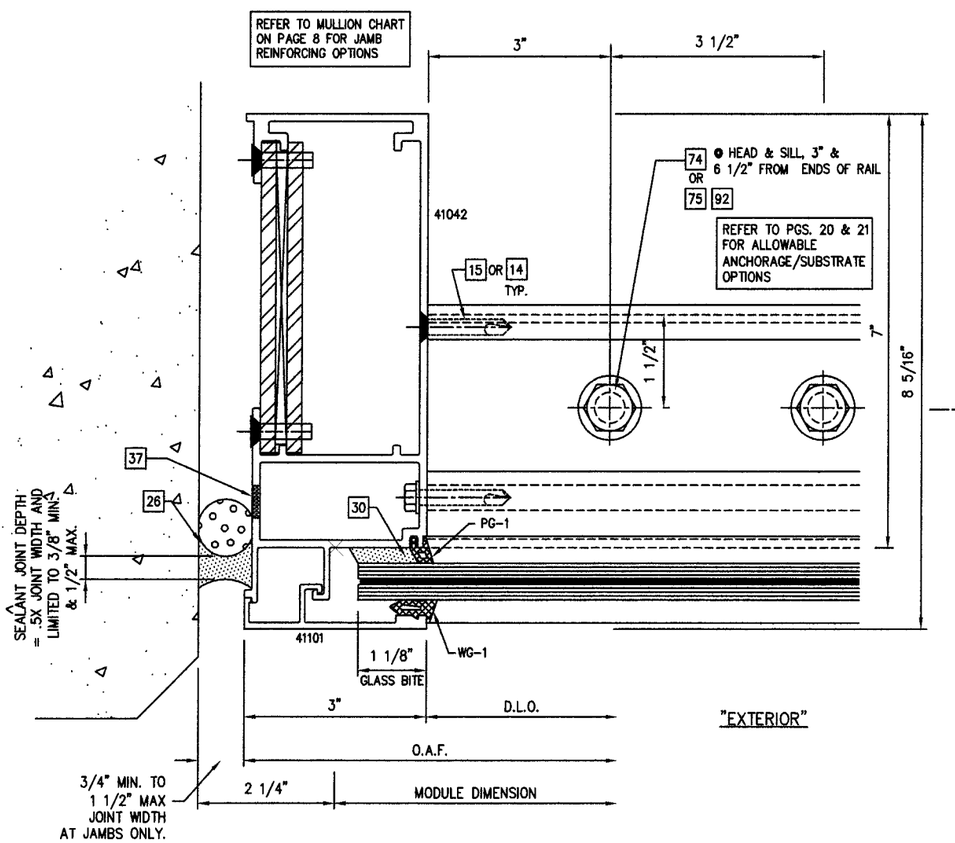

1/15 JAMB DETAIL – 9/16" CAPTURED GLASS (1 3/8" GLASS SIMILAR) WITH THRU CAN ANCHORAGE OPTION

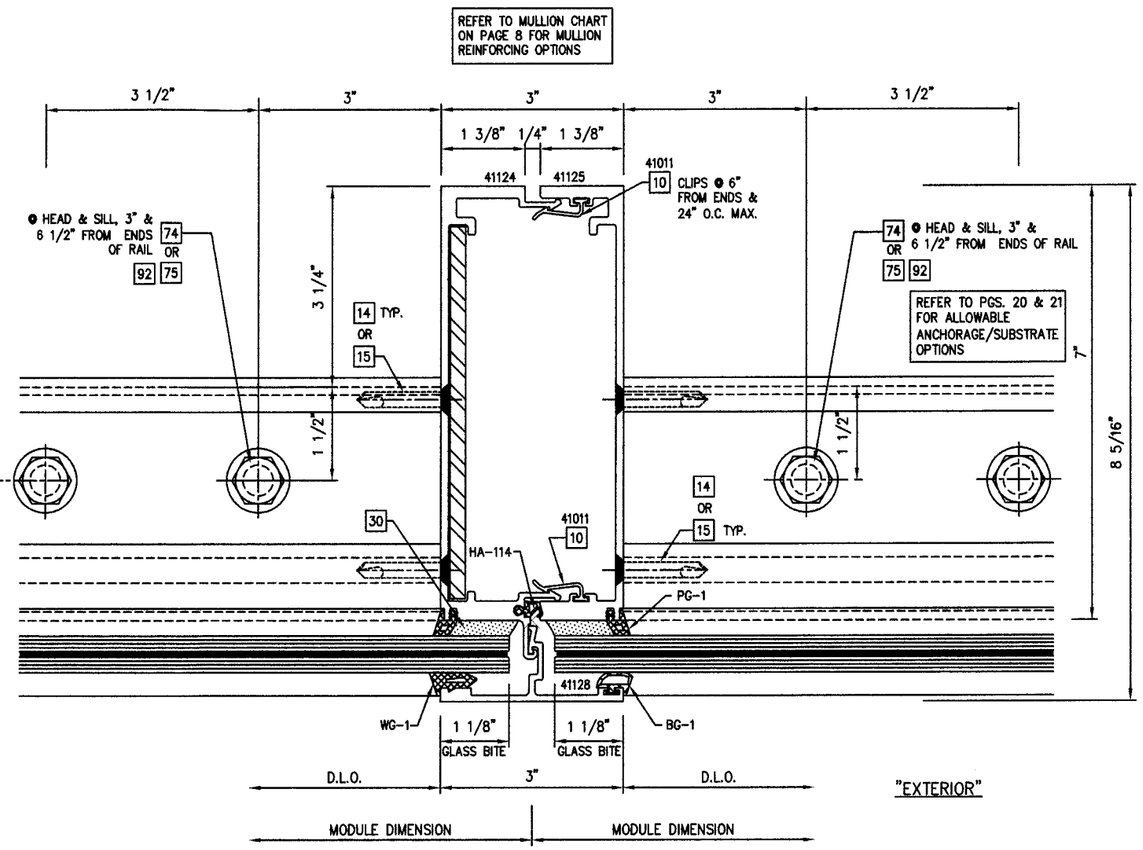

2/15 VERTICAL MULLION DETAIL – 9/16" CAPTURED GLASS (1 3/8" GLASS SIMILAR) WITH THRU CAN ANCHORAGE OPTION

PERIMETER SEALANT OPTIONS:
DOW-CORNING 790 SILICONE
DOW-CORNING 791 SILICONE
DOW-CORNING 795 SILICONE

ALTERNATE PERIMETER SEALANT TYPES AND JOINT SIZES SHALL BE DESIGNED AND APPROVED BY DESIGN PROFESSIONAL OF RECORD AND OR THE SEALANT MANUFACTURER

FOR MIAMI-DADE CO. B.C.C.O.

Approved as complying with the Florida Building Code
Date SEPT 9, 2014
NOA# 08-0915.15
Miami Dade Product Control Division
By Manuel Perez

enclos corp
2770 Blue Water Road
Eagan, MN 55121-1400
Tel. 651-796-6100 • Fax 651-994-6360
Engineering Locations
Eagan, MN • Montreal, QC, CA • Moncton, NB, CA
St. Louis, MO • Manila, PH

REVISIONS

1	7/5/2009	REV'S PER M.D.B.C.C.O.
2	7/22/2009	FINAL REVISIONS

SEAL:
AUG 17 2009
Reviewed For Structural Integrity Only

BROMLEY · COOK ENGINEERING, INC.
STRUCTURAL ENGINEERING SERVICES
5440 N.W. 33RD AVENUE SUITE 100
FORT LAUDERDALE, FLORIDA 33309
TEL: (954) 772-4624 FAX: (954) 772-4634
CERT. OF AUTH. #00009124
WILLIAM D. COOK P.E.
FLA P.E. # 43904
FLA S.I. # 2008

Date	Scale
7/31/08	

Drawing No.
7030 SS SMI

Drawing Title
7030 SERIES WINDOW WALL
SINGLE SPAN
SMALL MISSILE IMPACT

Sheet No.
15/25

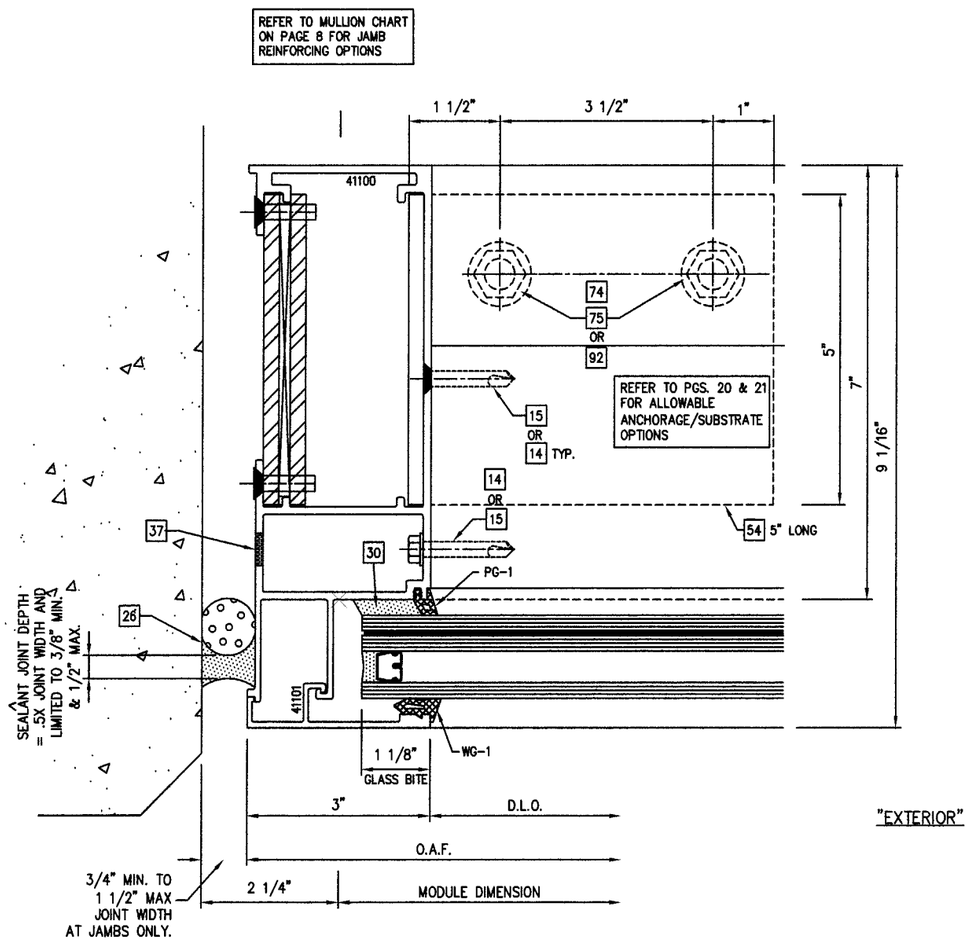

1/16 JAMB DETAIL – 1 3/8" CAPTURED GLASS (9/16" GLASS SIMILAR) WITH "L" CLIP ANCHORAGE OPTION

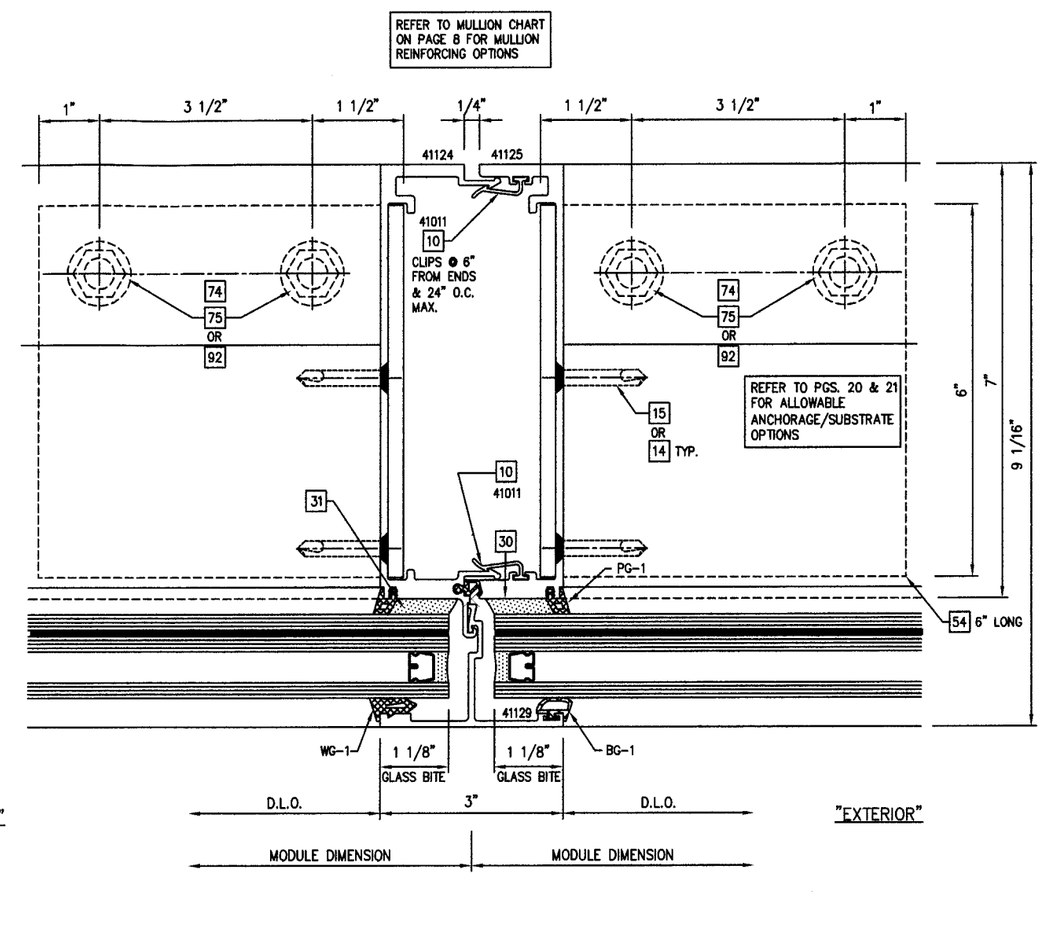

1/16 VERTICAL MULLION DETAIL – 1 3/8" CAPTURED GLASS (9/16" GLASS SIMILAR) WITH "L" CLIP ANCHORAGE OPTION

PERIMETER SEALANT OPTIONS:
DOW-CORNING 790 SILICONE
DOW-CORNING 791 SILICONE
DOW-CORNING 795 SILICONE

ALTERNATE PERIMETER SEALANT TYPES AND JOINT SIZES SHALL BE DESIGNED AND APPROVED BY DESIGN PROFESSIONAL OF RECORD AND OR THE SEALANT MANUFACTURER

FOR MIAMI-DADE CO. B.C.C.O.

Approved as complying with the Florida Building Code
Date SEPT. 9, 2014
NOA# 08-0915.15
Miami Dade Product Control Division
By Manuel Perez

enclos corp

2770 Blue Water Road
Eagan, MN 55121-1400
Tel. 651-796-6100 • Fax 651-994-6360
Engineering Locations
Eagan, MN • Montreal, QC, CA • Moncton, NB, CA
St. Louis, MO • Manila, PH

REVISIONS
1 7/5/2009 REV'S PER M.D.B.C.C.O.
2 7/22/2009 FINAL REVISIONS

SEAL:
AUG 17 2009
Reviewed For Structural Integrity Only

BROMLEY · COOK ENGINEERING, INC.
STRUCTURAL ENGINEERING SERVICES
5440 N.W. 33RD AVENUE SUITE 100
FORT LAUDERDALE, FLORIDA 33309
TEL: (954) 772-4624 FAX: (954) 772-4634
CERT. OF AUTH. #00009124
WILLIAM D. COOK P.E.
FLA P.E. # 43904
FLA S.I. # 2008

Date 7/31/08
Scale

Drawing No. 7030 SS SMI

Drawing Title
7030 SERIES WINDOW WALL
SINGLE SPAN
SMALL MISSILE IMPACT

Sheet No. 16/25

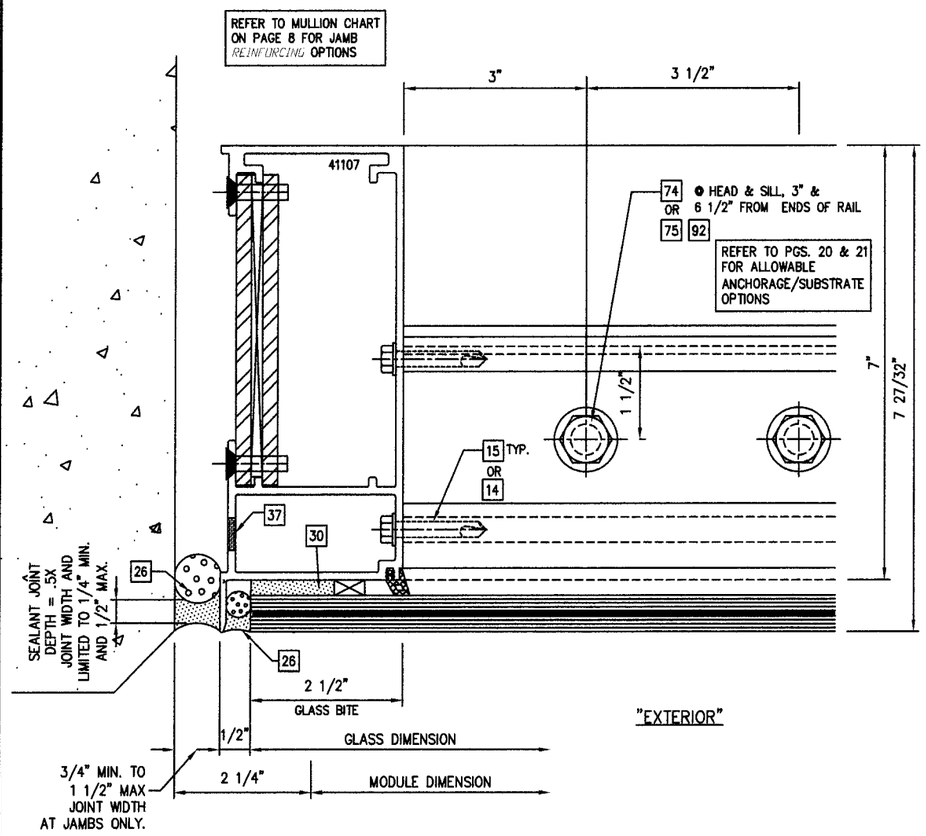

1/17 JAMB DETAIL – 9/16" STRUCTURALLY GLAZED GLASS (1 3/8" GLASS SIMILAR) WITH THRU CAN ANCHORAGE OPTION

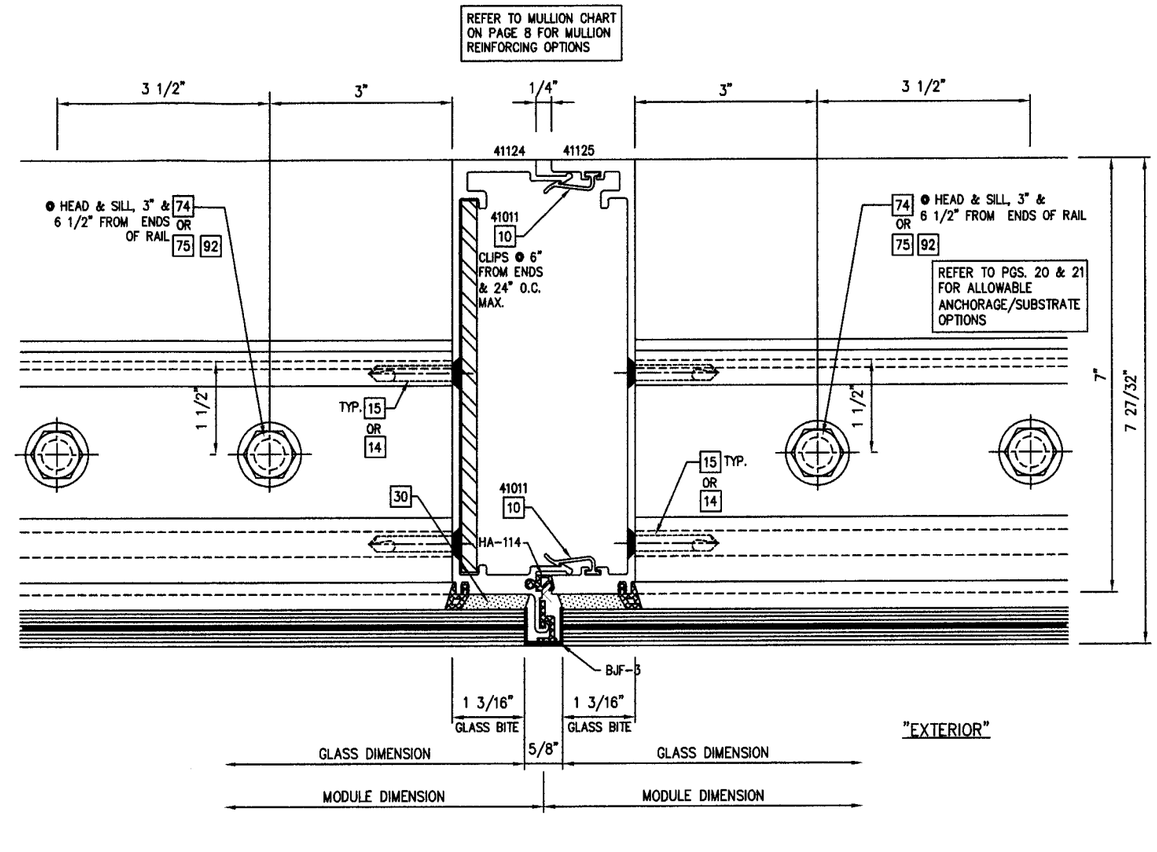

2/17 VERTICAL MULLION DETAIL – 9/16" STRUCTURALLY GLAZED GLASS (1 3/8" GLASS SIMILAR) WITH THRU CAN ANCHORAGE OPTION

PERIMETER SEALANT OPTIONS:
DOW-CORNING 790 SILICONE
DOW-CORNING 791 SILICONE
DOW-CORNING 795 SILICONE

ALTERNATE PERIMETER SEALANT TYPES AND JOINT SIZES SHALL BE DESIGNED AND APPROVED BY DESIGN PROFESSIONAL OF RECORD AND OR THE SEALANT MANUFACTURER

FOR MIAMI-DADE CO. B.C.C.O.

Approved as complying with the Florida Building Code
Date SEPT. 9 2014
NOA# 09-0915.15
Miami Dade Product Control Division
By Manuel Perez

enclos corp

2770 Blue Water Road
Eagan, MN 55121-1400
Tel. 651-796-6100 • Fax 651-994-6368
Engineering Locations
Eagan, MN • Montreal, QC, CA • Moncton, NB, CA
St. Louis, MO • Manila, PH

REVISIONS
1 7/5/2009 REV'S PER M.D.B.C.C.O.
2 7/22/2009 FINAL REVISIONS

SEAL:
AUG 17 2009
Reviewed For Structural Integrity Only

BROMLEY • COOK ENGINEERING, INC.
STRUCTURAL ENGINEERING SERVICES
5440 N.W. 33RD AVENUE SUITE 100
FORT LAUDERDALE, FLORIDA 33309
TEL: (954) 772-4624 FAX: (954) 772-4634
CERT. OF AUTH. #00009124
WILLIAM D. COOK, P.E.
FLA P.E. # 43904
FLA S.I. # 2008

Date 7/31/08
Scale

Drawing No.
7030 SS SMI

Drawing Title
7030 SERIES WINDOW WALL
SINGLE SPAN
SMALL MISSILE IMPACT

Sheet No.
17/25

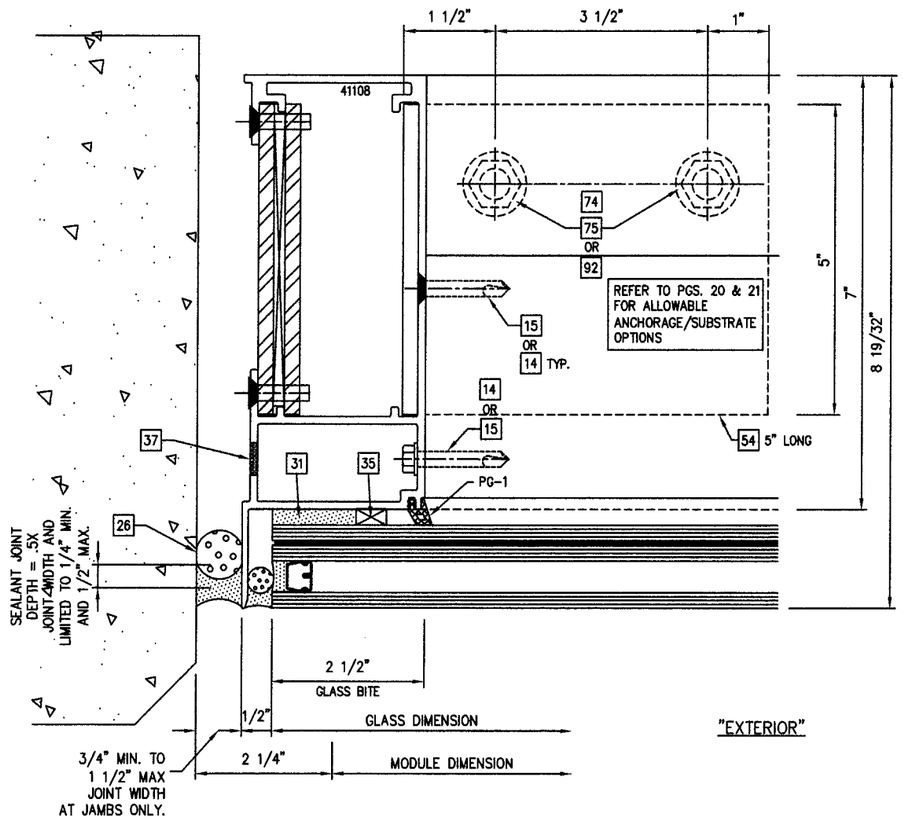

1/18 JAMB DETAIL – 1 3/8" STRUCTURALLY GLAZED GLASS (9/16" GLASS SIMILAR) WITH "L" CLIP ANCHORAGE OPTION

REFER TO MULLION CHART ON PAGE 8 FOR MULLION REINFORCING OPTIONS

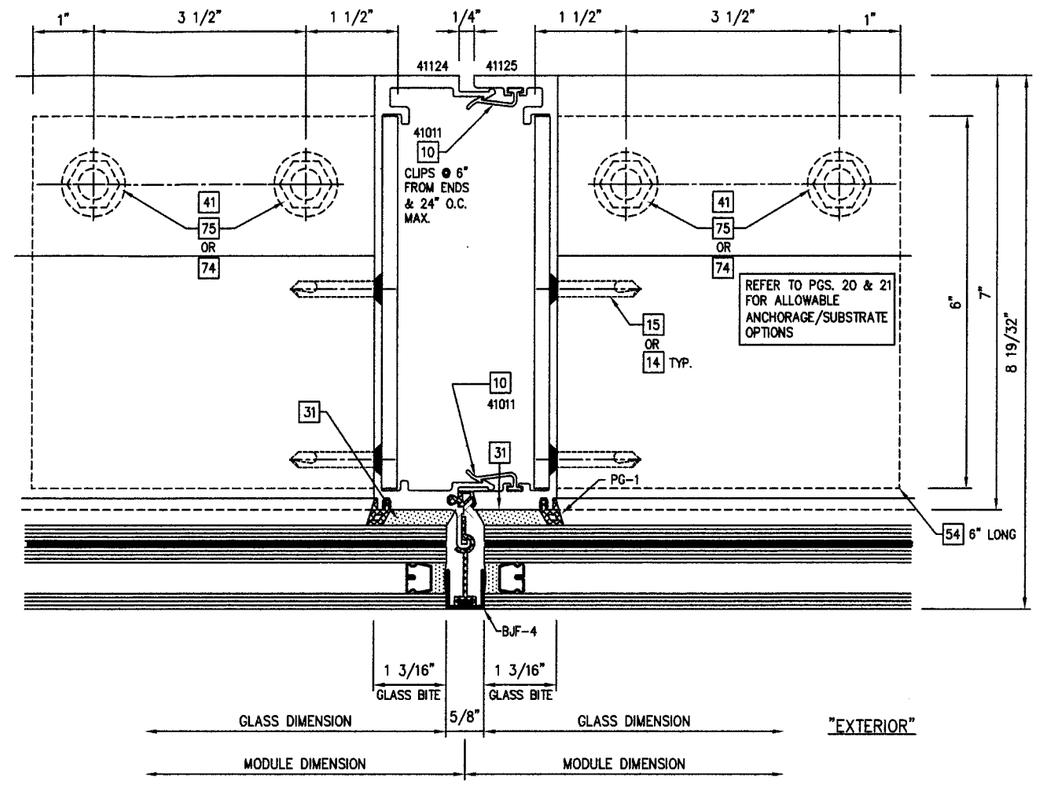

2/18 VERTICAL MULLION DETAIL – 1 3/8" STRUCTURALLY GLAZED GLASS (9/16" GLASS SIMILAR) WITH "L" CLIP ANCHORAGE OPTION

FOR MIAMI-DADE CO. B.C.C.O.

Approved as complying with the Florida Building Code
Date SEPT. 9, 2014
NOA# 08-0915.15
Miami Dade Product Control Division
By Manuel Perez

enclos corp

2770 Blue Water Road
Eagan, MN 55121-1400
Tel. 651-796-6100 • Fax 651-994-6380
Engineering Locations
Eagan, MN • Montreal, QC, CA • Moncton, NB, CA
St. Louis, MO • Manila, PH

REVISIONS

1	7/5/2009 REV'S PER M.D.B.C.C.O.
2	7/22/2009 FINAL REVISIONS

SEAL:

AUG 17 2009
Reviewed For Structural Integrity Only

BROMLEY · COOK ENGINEERING, INC.
STRUCTURAL ENGINEERING SERVICES
5440 N.W. 33RD AVENUE SUITE 100
FORT LAUDERDALE, FLORIDA 33309
TEL: (954) 772-4624 FAX: (954) 772-4634
CERT. OF AUTH. #00009124
WILLIAM D. COOK P.E.
FLA P.E. # 43904
FLA S.I. # 2008

Date	Scale
7/31/08	

Drawing No.
7030 SS SMI

Drawing Title
7030 SERIES WINDOW WALL
SINGLE SPAN
SMALL MISSILE IMPACT

Sheet No.
18/25

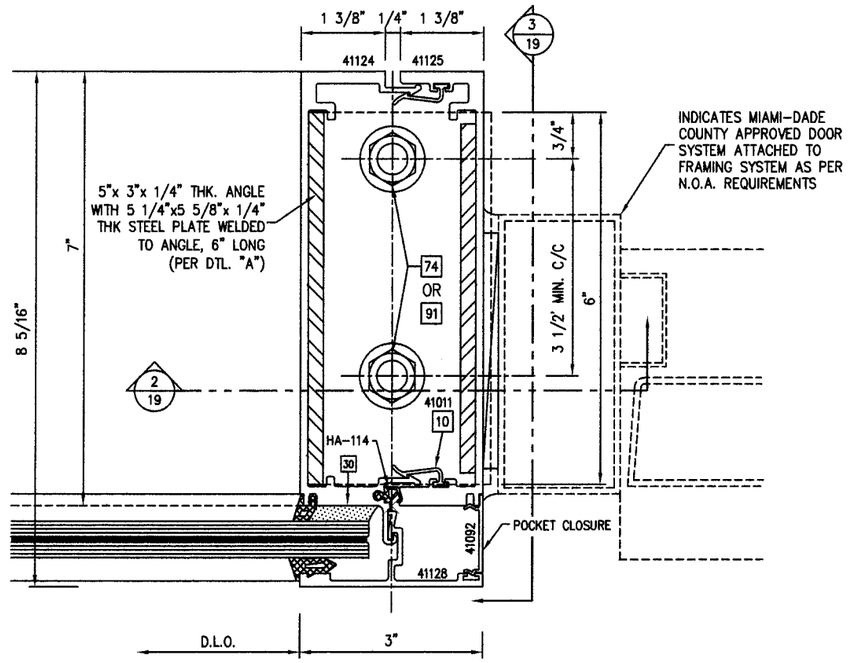

1/19 VERTICAL MULLION DETAIL – 9/16" CAPTURED GLASS
1 3/8" GLASS SIMILAR

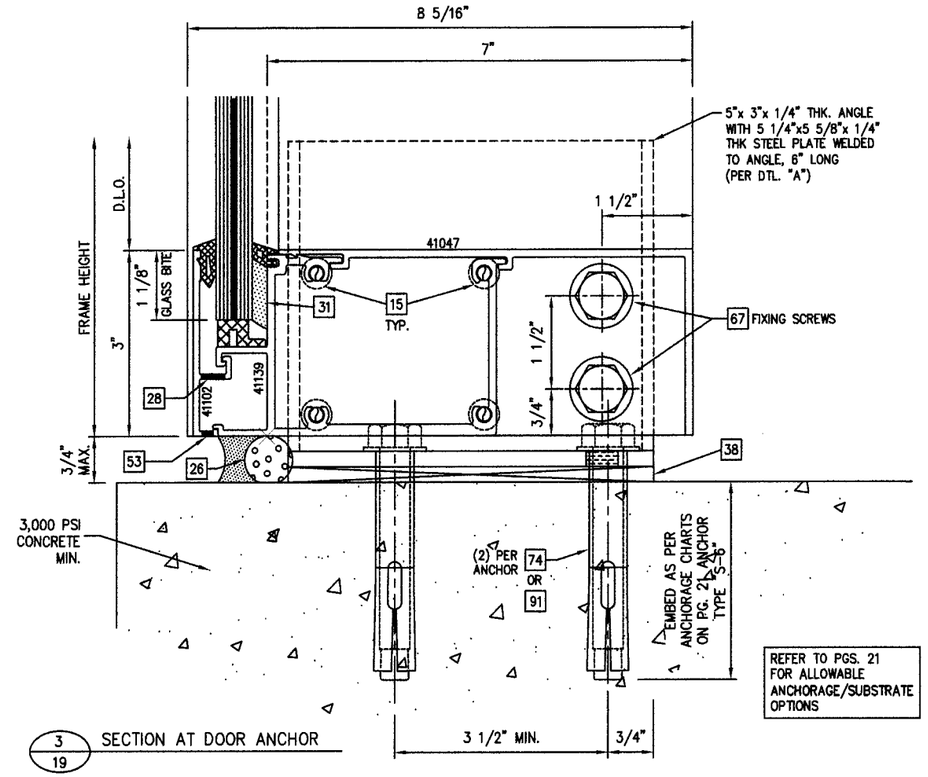

3/19 SECTION AT DOOR ANCHOR

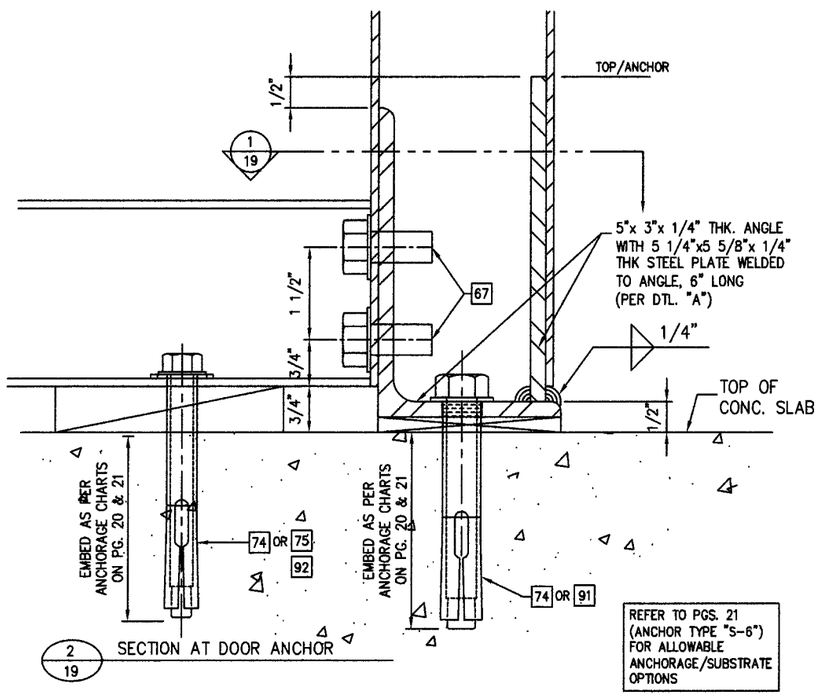

2/19 SECTION AT DOOR ANCHOR

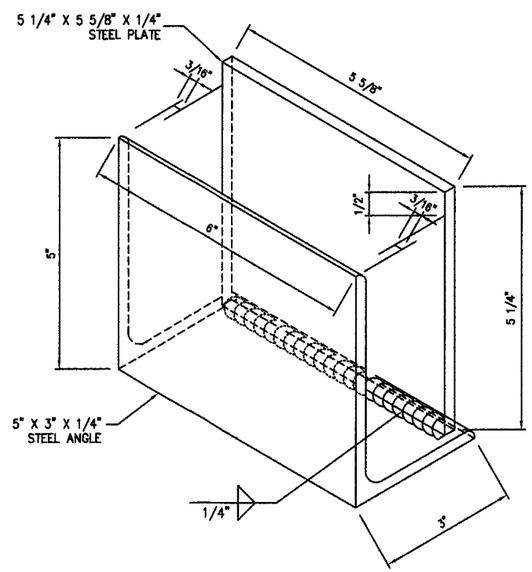

A/19 ANCHOR SLEEVE FABRICATION DETAIL "A"
(ISOMETRIC VIEW)

FOR MIAMI-DADE CO. B.C.C.O.

Approved as complying with the Florida Building Code
Date SEPT 9, 2014
NOA# 08-0915.15
Miami Dade Product Control Division
By Miguel Perez

enclos corp

2770 Blue Water Road
Eagan, MN 55121-1400
Tel. 651-796-6100 • Fax 651-994-6360
Engineering Locations
Eagan, MN • Montreal, QC, CA • Moncton, NB, CA
St. Louis, MO • Manila, PH

REVISIONS

1	7/5/2009 REV'S PER M.D.B.C.C.O.
2	7/22/2009 FINAL REVISIONS

SEAL:

AUG 17 2009
Reviewed For Structural Integrity Only

BROMLEY · COOK ENGINEERING, INC.
STRUCTURAL ENGINEERING SERVICES
5440 N.W. 33RD AVENUE SUITE 100
FORT LAUDERDALE, FLORIDA 33309
TEL: (954) 772-4624 FAX: (954) 772-4634
CERT. OF AUTH. #00009124
WILLIAM D. COOK P.E.
FLA P.E. # 43904
FLA S.I. # 2008

Date	Scale
7/31/08	

Drawing No.
7030 SS SMI

Drawing Title
7030 SERIES WINDOW WALL
SINGLE SPAN
SMALL MISSILE IMPACT

Sheet No.
19/25

MAX. DESIGN PRESSURES (P.S.F.) FOR VARIOUS ANCHOR OPTIONS

MODULE WD. C.L. TO C.L.	MULLION HGT.	ANCHOR OPTIONS: ANCHOR TYPE "H1" TYPE "S1"	ANCHOR TYPE "H2" TYPE "S2"	ANCHOR TYPE "H3" TYPE "S3"
48" 52" 54" 57"	96"	+110, -143	+110, -143	+110, -130
48" 52" 54" 57"	98"			
48" 52" 54" 57"	114"			
48" 52" 54" 57"	120"	+110, -143		+110, -130
48" 52" 54" 57"	132"	+110, -143 +110, -143 +110, -140 +110, -132		
48" 52" 54" 57"	144"	+110, -143 +110, -130 +110, -125 +110, -120	+110, -143	
48" 52" 54" 57"	180"	+90, -90 +90, -90 +90, -90 +90, -90	+90, -90 +90, -90 +90, -90 +90, -90	

SEE ADDITIONAL ANCHOR CHART ON NEXT PAGE.

NOTE:
MULLION REINFORCING NOT SHOWN FOR CLARITY. SEE MULLION CHART ON PAGE 8 FOR REINFORCING REQUIREMENTS

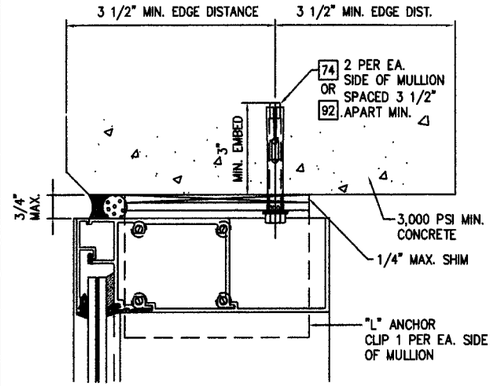

TYPE "H1" -HEAD ANCHOR

"L" ANCHOR CLIPS W/ 1/2" DIA. POWER BOLTS
OR;
1/2" DIA. WEDGE BOLTS INTO CONCRETE SUBSTRATE.
3" MIN. EMBED, 3 1/2" MIN. C/C SPACING.

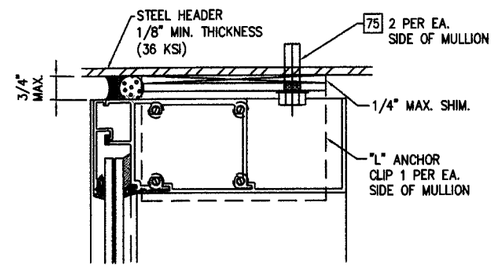

TYPE "H2" -HEAD ANCHOR

"L" ANCHOR CLIPS W/ 1/2-13 GRADE 5 ZINC. PL.
H.W.H. TAPTITE SCREWS INTO STEEL SUBSTRATE (.125" MIN. WALL TH.)

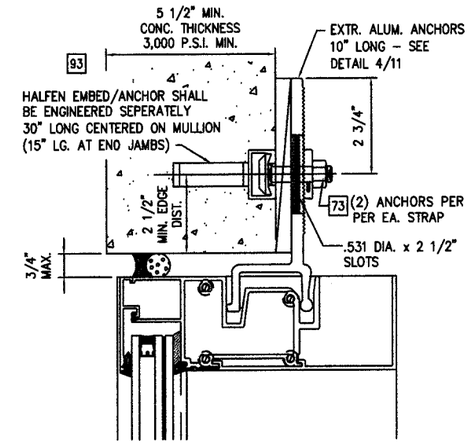

TYPE "H3" -HEAD ANCHOR

EXTRUDED ALUM. STRAP ANCHORS W/
HALFEN ENGINEERED EMBED & 1/2-13 X 2 3/8" GR. 8.8
HI-TENSILE TEE-BOLT & HEX NUT INTO CONC. SUBSTRATE

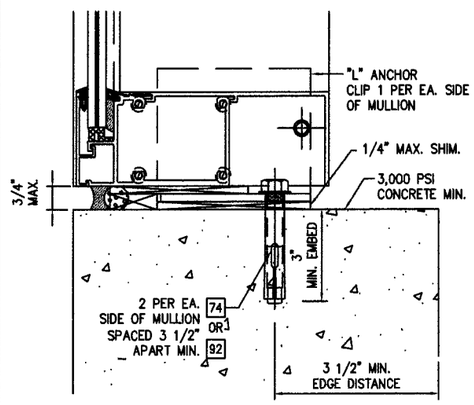

TYPE "S1" -SILL ANCHOR

"L" ANCHOR CLIPS W/ 1/2" DIA. POWER BOLTS
OR 1/2" DIA. WEDGE BOLTS INTO CONCRETE SUBSTRATE.
3" MIN. EMBED, 3 1/2" MIN. C/C SPACING.

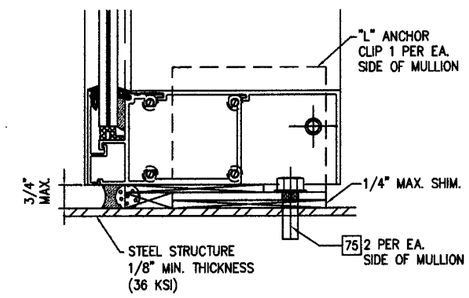

TYPE "S2" -SILL ANCHOR

"L" ANCHOR CLIPS W/ 1/2-13 X GRADE 5 ZINC. PL.
H.W.H. TAPTITE SCREWS INTO STEEL SUBSTRATE (.125" MIN. WALL TH.)

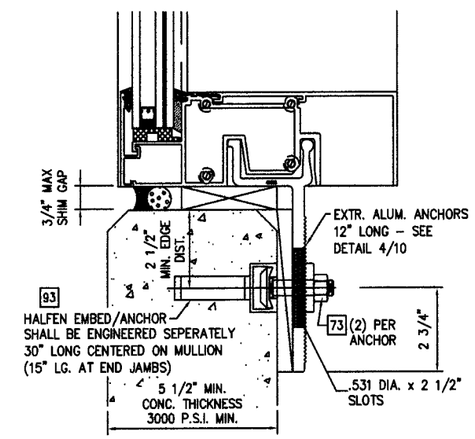

TYPE "S3" -SILL ANCHOR

EXTRUDED ALUM. STRAP ANCHORS W/
HALFEN ENGINEERED EMBED & 1/2-13 X 2 3/8" GR. 8.8
HI-TENSILE TEE-BOLT & HEX NUT

FOR MIAMI-DADE CO. B.C.C.O.

Approved as complying with the Florida Building Code
Date SEPT 9, 2014
NOA# 08-0915.15
Miami Dade Product Control Division
By Manuel Perez

enclos corp

2770 Blue Water Road
Eagan, MN 55121-1400
Tel. 651-796-0100 • Fax 651-994-6360
Engineering Locations
Eagan, MN • Montreal, QC, CA • Moncton, NB, CA
St. Louis, MO • Manila, PH

REVISIONS
1 7/5/2009 REV'S PER M.D.B.C.C.O.
2 7/22/2009 FINAL REVISIONS

SEAL:
AUG 17 2009
Reviewed For Structural Integrity Only

BROMLEY • COOK ENGINEERING, INC.
STRUCTURAL ENGINEERING SERVICES
5440 N.W. 33RD AVENUE SUITE 100
FORT LAUDERDALE, FLORIDA 33309
TEL: (954) 772-4624 FAX: (954) 772-4634
CERT. OF AUTH: #00009124
WILLIAM D. COOK P.E.
FLA P.E. # 43904
FLA S.I. # 2008

Date 7/31/08
Scale

Drawing No.
7030 SS SMI

Drawing Title
7030 SERIES WINDOW WALL
SINGLE SPAN
SMALL MISSILE IMPACT

Sheet No.
20/25

MAX. DESIGN PRESSURES (P.S.F.) FOR VARIOUS ANCHOR OPTIONS

MODULE WD. C.L. TO C.L.	MULLION HGT.	ANCHOR OPTIONS: ANCHOR TYPE "H4" TYPE "S4"	ANCHOR TYPE "H5" TYPE "S5"	ANCHOR TYPE "S6"	ANCHOR TYPE "S7"
48" 52" 54" 57"	96"	+110, -130 +110, -120 +110, -115 +110, -110	+110, -143 +110, -130 +110, -125 +110, -120	+110, -143	+110, -143 +110, -130 +110, -125 +110, -120
48" 52" 54" 57"	98"	+110, -120 +110, -115 +110, -110 +105, -105	+110, -130 +110, -125 +110, -120 +110, -115		+110, -130 +110, -125 +110, -120 +110, -115
48" 52" 54" 57"	114"	+110, -110 +100, -100 +95, -95 +90, -90	+110, -115 +110, -110 +105, -105 +100, -100		+110, -115 +110, -110 +105, -105 +100, -100
48" 52" 54" 57"	120"	+100, -100 +95, -95 +90, -90 +85, -85	+110, -110 +105, -105 +100, -100 +95, -95		+110, -110 +105, -105 +100, -100 +95, -95
48" 52" 54" 57"	132"				
48" 52" 54" 57"	144"			+110, -143	
48" 52" 54" 57"	180"			+90, -90 +90, -90 +90, -90 +90, -90	

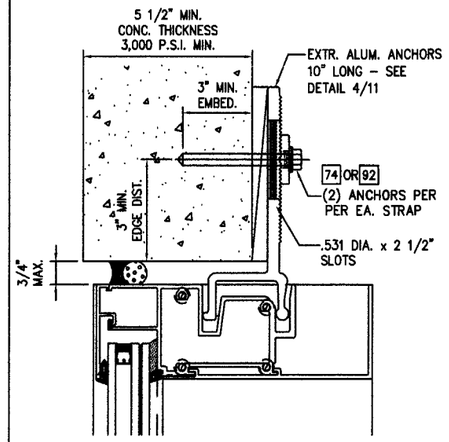

TYPE "H4" -HEAD ANCHOR

EXTRUDED ALUMINUM STRAP ANCHOR W/ 1/2" DIA. POWER BOLTS OR 1/2" DIA. WEDGE BOLTS INTO CONCRETE SUBSTRATE.
3" MIN. EMBED, 4" MIN. C/C SPACING.

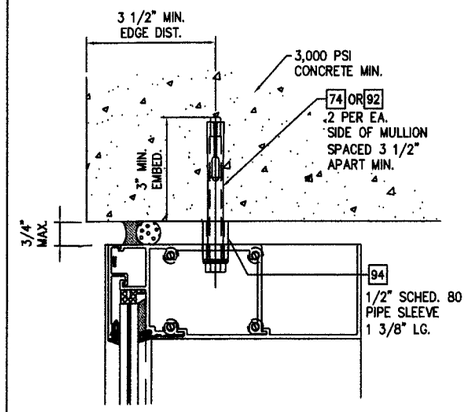

TYPE "H5" -HEAD ANCHOR

THRU HEAD CAN W/ 1/2" DIA. POWER BOLTS
OR;
1/2" DIA. WEDGE BOLTS INTO CONCRETE SUBSTRATE.
3" MIN. EMBED, 3 1/2" MIN. C/C SPACING.

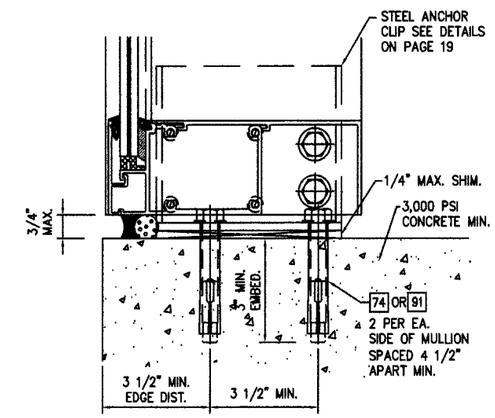

TYPE "S6" -SILL ANCHOR (@ DOOR MULLION)

STEEL "U" ANCHOR CLIPS W/ 1/2" DIA. POWER BOLTS
OR WEDGE BOLTS INTO CONC. SUBSTRATE (3" MIN. EMBED)

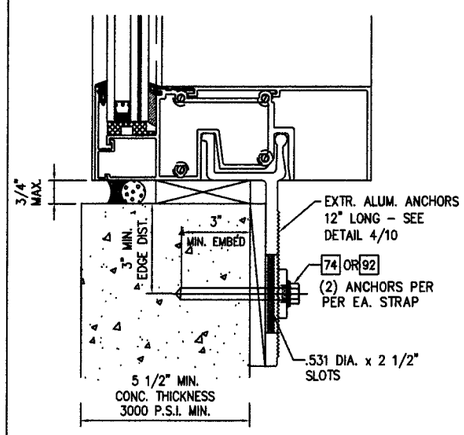

TYPE "S4" -SILL ANCHOR

EXTRUDED ALUMINUM STRAP ANCHOR W/ 1/2" DIA. POWER BOLTS
OR;
1/2" DIA. WEDGE BOLTS INTO CONCRETE SUBSTRATE.
3" MIN. EMBED, 4" MIN. C/C SPACING.

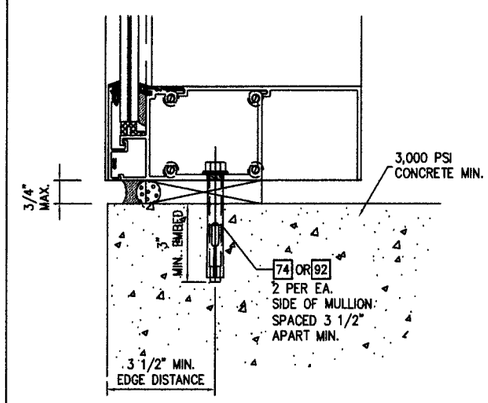

TYPE "S5" -SILL ANCHOR

THRU HEAD CAN W/ 1/2" DIA. POWER BOLTS
OR;
1/2" DIA. WEDGE BOLTS INTO CONCRETE SUBSTRATE.
3" MIN. EMBED, 3 1/2" MIN. C/C SPACING.

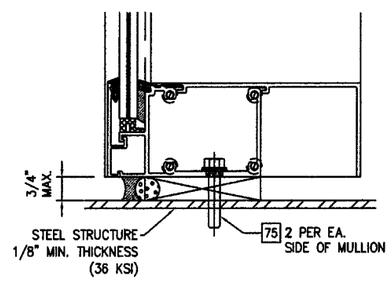

TYPE "S7" -SILL ANCHOR

THRU SILL CAN ANCHOR W/ 1/2-13 GRADE 5 ZINC. PL.
H.W.H. TAPTITE SCREWS INTO STEEL SUBSTRATE (.125" MIN. WALL TH.)

FOR MIAMI-DADE CO. B.C.C.O.

Approved as complying with the Florida Building Code
Date SEPT. 9, 2014
NOA# 08-0915.15
Miami Dade Product Control Division
By Manuel Perez

enclos corp
2770 Blue Water Road
Eagan, MN 55121-1400
Tel. 651-796-6100 • Fax 651-994-6360
Engineering Locations
Eagan, MN • Montreal, QC, Ca • Moncton, NB, CA
St. Louis, MO • Manila, PH

REVISIONS

1	7/5/2009 REV'S PER M.D.B.C.C.O.
2	7/22/2009 FINAL REVISIONS

SEAL:

AUG 07 2009

Reviewed For Structural Integrity Only

BROMLEY • COOK ENGINEERING, INC.
STRUCTURAL ENGINEERING SERVICES
5440 N.W. 33RD AVENUE SUITE 100
FORT LAUDERDALE, FLORIDA 33309
TEL: (954) 772-4624 FAX: (954) 772-4634
CERT. OF AUTH. #00009124
WILLIAM D. COOK P.E.
FLA. P.E. # 43904
FLA. S.I. # 2008

Date	Scale
7/31/08	

Drawing No.
7030 SS SMI

Drawing Title
7030 SERIES WINDOW WALL
SINGLE SPAN
SMALL MISSILE IMPACT

Sheet No.
21/25

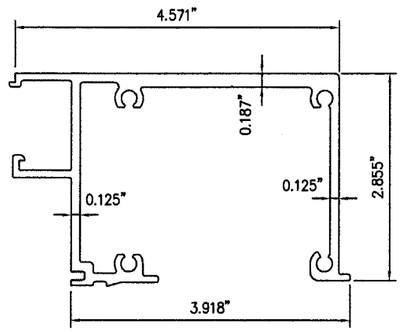

41139 (HEAD-SILL 9/16" CAPTURED)

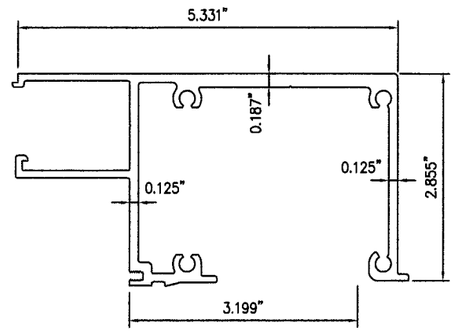

41140 (HEAD-SILL 1 3/8" CAPTURED)

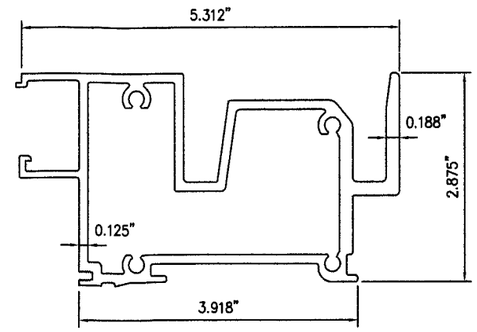

41103 (HEAD-SILL 9/16" CAPTURED)
(FOR STRAP ANCHOR)

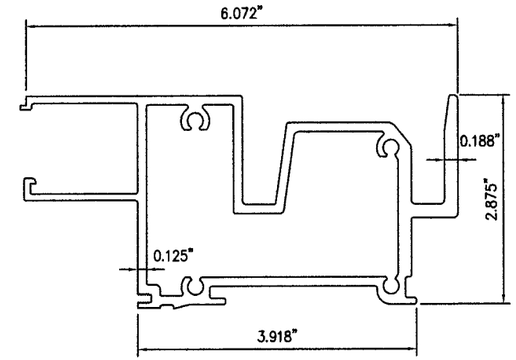

41039 (HEAD-SILL 1 3/8" CAPTURED)
(FOR STRAP ANCHOR)

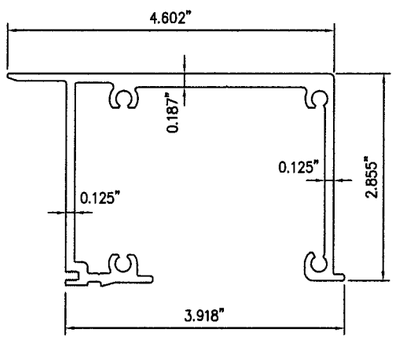

41116 (HEAD-SILL 9/16" SSG)

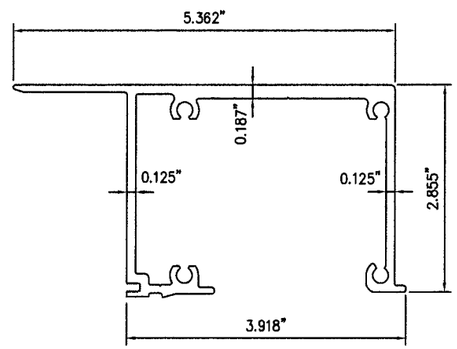

41117 (HEAD-SILL 1 3/8" SSG)

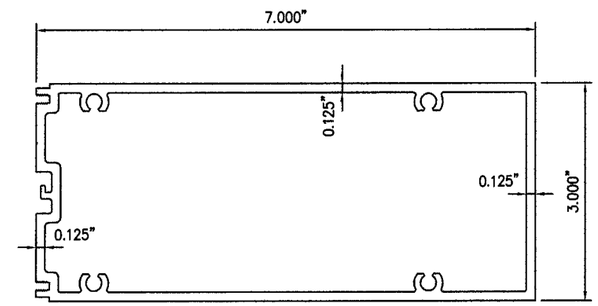

41048 (INTERMEDIATE HORIZONTAL)

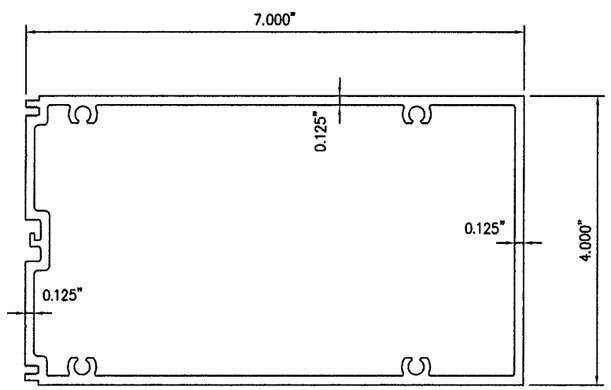

41118 (INTERMEDIATE HORIZONTAL)

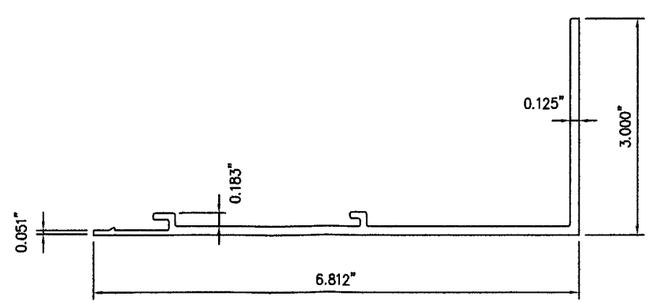

41047 INTERIOR COVER

EXTRUSIONS (6063-T6 ALLOY)

FOR MIAMI-DADE CO. B.C.C.O.

Approved as complying with the Florida Building Code
Date SEPT. 9 2014
NOA# 08-0915.15
Miami Dade Product Control Division
By Manuel Perez

enclos corp

2770 Blue Water Road
Eagan, MN 55121-1400
Tel. 651-796-6100 • Fax 651-994-6360

Engineering Locations
Eagan, MN • Montreal, QC, CA • Moncton, NB, CA
St. Louis, MO • Manila, PH

REVISIONS

1	7/5/2009 REV'S PER M.D.B.C.C.O.
2	7/22/2009 FINAL REVISIONS

SEAL:

AUG 17 2009

Reviewed For Structural Integrity Only

BROMLEY • COOK ENGINEERING, INC.
STRUCTURAL ENGINEERING SERVICES
5440 N.W. 33RD AVENUE SUITE 100
FORT LAUDERDALE, FLORIDA 33309
TEL: (954) 772-4624 FAX: (954) 772-4634
CERT. OF AUTH. #00009124
WILLIAM D. COOK P.E.
FLA P.E. # 43904
FLA S.I. # 2008

Date	Scale
7/31/08	

Drawing No.
7030 SS SMI

Drawing Title
7030 SERIES WINDOW WALL
SINGLE SPAN
SMALL MISSILE IMPACT

Sheet No.
22/25

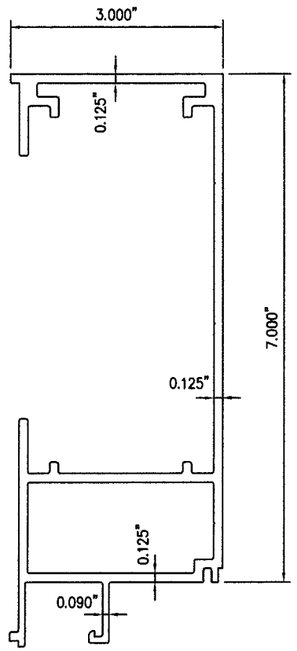

41042 (JAMB 9/16" CAPTURED)
Ix-x = 20.68in^4
Sx-x = 5.24in^3

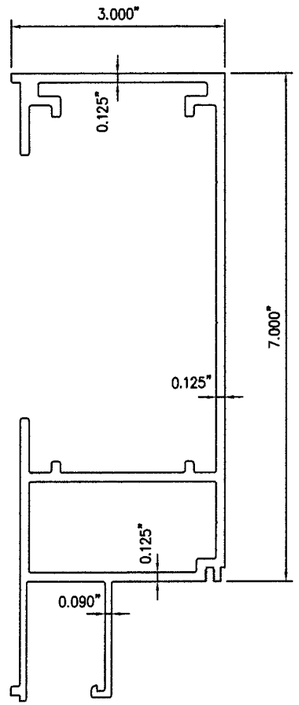

41100 (JAMB 1 3/8" CAPTURED)
Ix-x = 27.67in^4
Sx-x = 6.50in^3

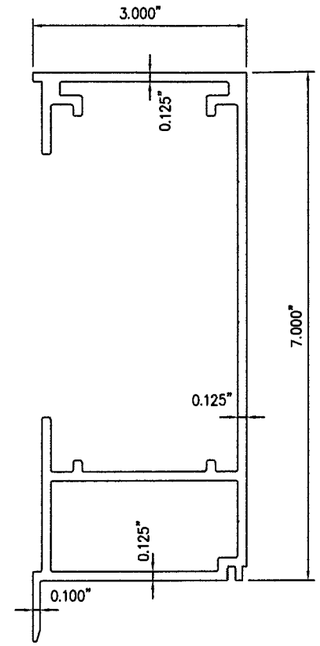

41107 (JAMB 9/16" SSG)
Ix-x = 22.13in^4
Sx-x = 5.77in^3

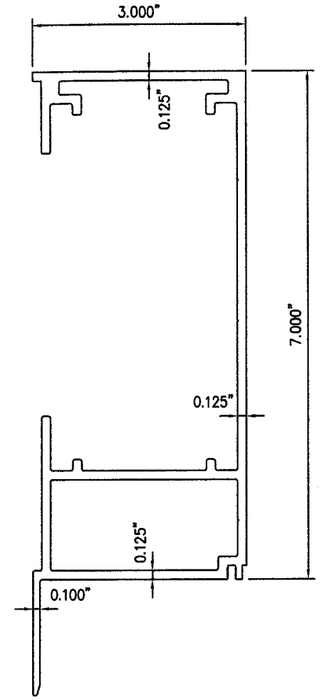

41108 (JAMB 1 3/8" SSG)
Ix-x = 24.03in^4
Sx-x = 6.04in^3

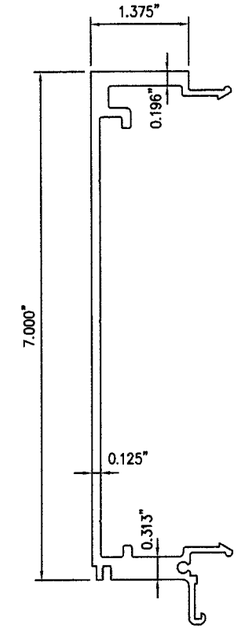

41124 (MALE MULLION)
(3" WIDE MULLION)

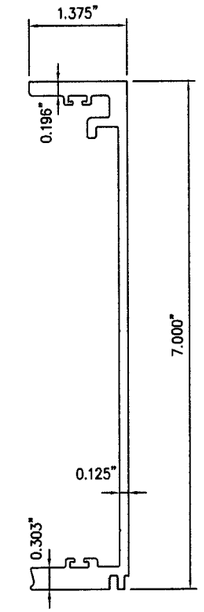

41125 (FEMALE MULLION)
(3" WIDE MULLION)

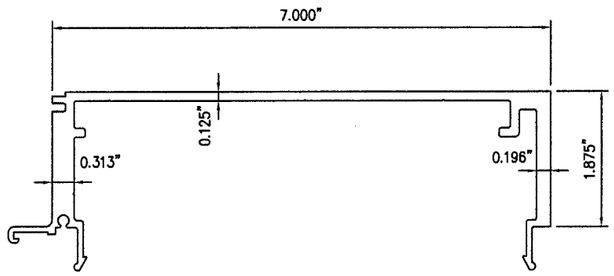

41126 (MALE MULLION)
(4" WIDE MULLION)

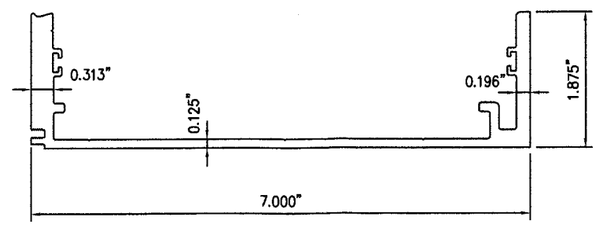

41127 (FEMALE MULLION)
(4" WIDE MULLION)

FOR MIAMI-DADE CO. B.C.C.O.

Approved as complying with the Florida Building Code
Date SEPT. 9, 2014
NOA# 08-0915.15
Miami Dade Product Control Division
By Manuel Perez

enclos corp

2770 Blue Water Road
Eagan, MN 55121-1400
Tel. 651-796-6100 • Fax 651-994-6360
Engineering Locations
Eagan, MN • Montreal, QC, CA • Moncton, NB, CA
St. Louis, MO • Manila, PH

REVISIONS

1	7/5/2009 REV'S PER M.D.B.C.C.O.
2	7/22/2009 FINAL REVISIONS

SEAL:
AUG 17 2009
Reviewed For Structural Integrity Only

BROMLEY • COOK ENGINEERING, INC.
STRUCTURAL ENGINEERING SERVICES
5440 N.W. 33RD AVENUE SUITE 100
FORT LAUDERDALE, FLORIDA 33309
TEL: (954) 772-4624 FAX: (954) 772-4634
CERT. OF AUTH. #00009124
WILLIAM D. COOK P.E.
FLA P.E. # 43904
FLA S.I. # 2008

Date	Scale
7/31/08	

Drawing No.
7030 SS SMI

Drawing Title
7030 SERIES WINDOW WALL
SINGLE SPAN
SMALL MISSILE IMPACT

Sheet No.
23/25

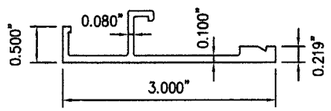

41101 (JAMB FACE COVER)

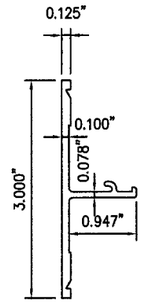

41028 (INT. HORIZ. FACE COVER)

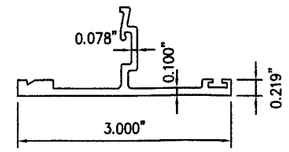

41128 (MULLION FACE COVER)
(9/16" GLAZING)

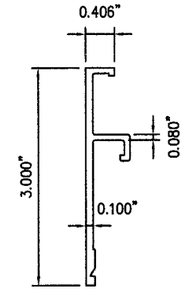

41102 (HEAD-SILL FACE COVER)

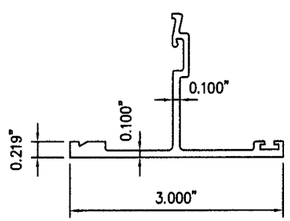

41129 (MULLION FACE COVER)
(1 3/8" GLAZING)

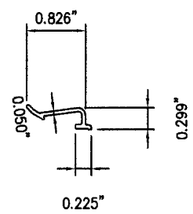

41011 (ANTI-BUCKLING CLIP)

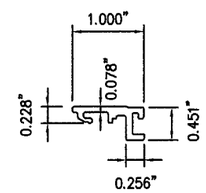

41027 (GLASS SETTING LEG)
(9/16" GLAZING)

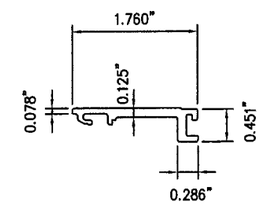

41043 (GLASS SETTING LEG)
(1 3/8" GLAZING)

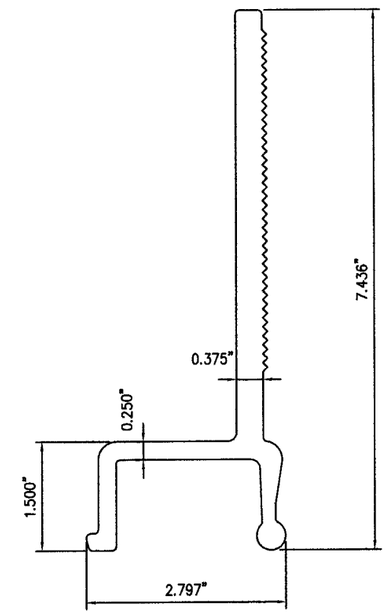

41016 (STRAP ANCHOR)
(FOR PRE-CAST WALL)

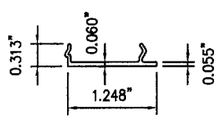

41092 (FLUSH FILLER)
(FOR DOOR MULLIONS)

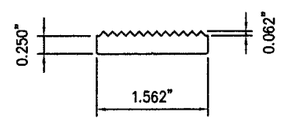

41012 (STRAP ANCHOR)
(POSITION LOCK)

EXTRUSIONS (6063-T6 ALLOY)

FOR MIAMI-DADE CO. B.C.C.O.

Approved as complying with the Florida Building Code
Date SEPT. 9, 2014
NOA# 08-0915.15
Miami Dade Product Control Division
By Manuel Perez

enclos corp

2770 Blue Water Road
Eagan, MN 55121-1400
Tel. 651-796-6100 • Fax 651-994-6360
Engineering Locations
Eagan, MN • Montreal, QC, CA • Moncton, NB, CA
St. Louis, MO • Manila, PH

REVISIONS

1	7/5/2009 REV'S PER M.D.B.C.C.O.
2	7/22/2009 FINAL REVISIONS

SEAL:

AUG 17 2009
Reviewed For Structural Integrity Only

BROMLEY • COOK ENGINEERING, INC.
STRUCTURAL ENGINEERING SERVICES
5440 N.W. 33RD AVENUE SUITE 100
FORT LAUDERDALE, FLORIDA 33309
TEL: (954) 772-4624 FAX: (954) 772-4634
CERT. OF AUTH. #00009124
WILLIAM D. COOK, P.E.
FLA. P.E. # 43904
FLA S.I. # 2008

Date	Scale
7/31/08	

Drawing No.
7030 SS SMI

Drawing Title
7030 SERIES WINDOW WALL
SINGLE SPAN
SMALL MISSILE IMPACT

Sheet No.
24/25

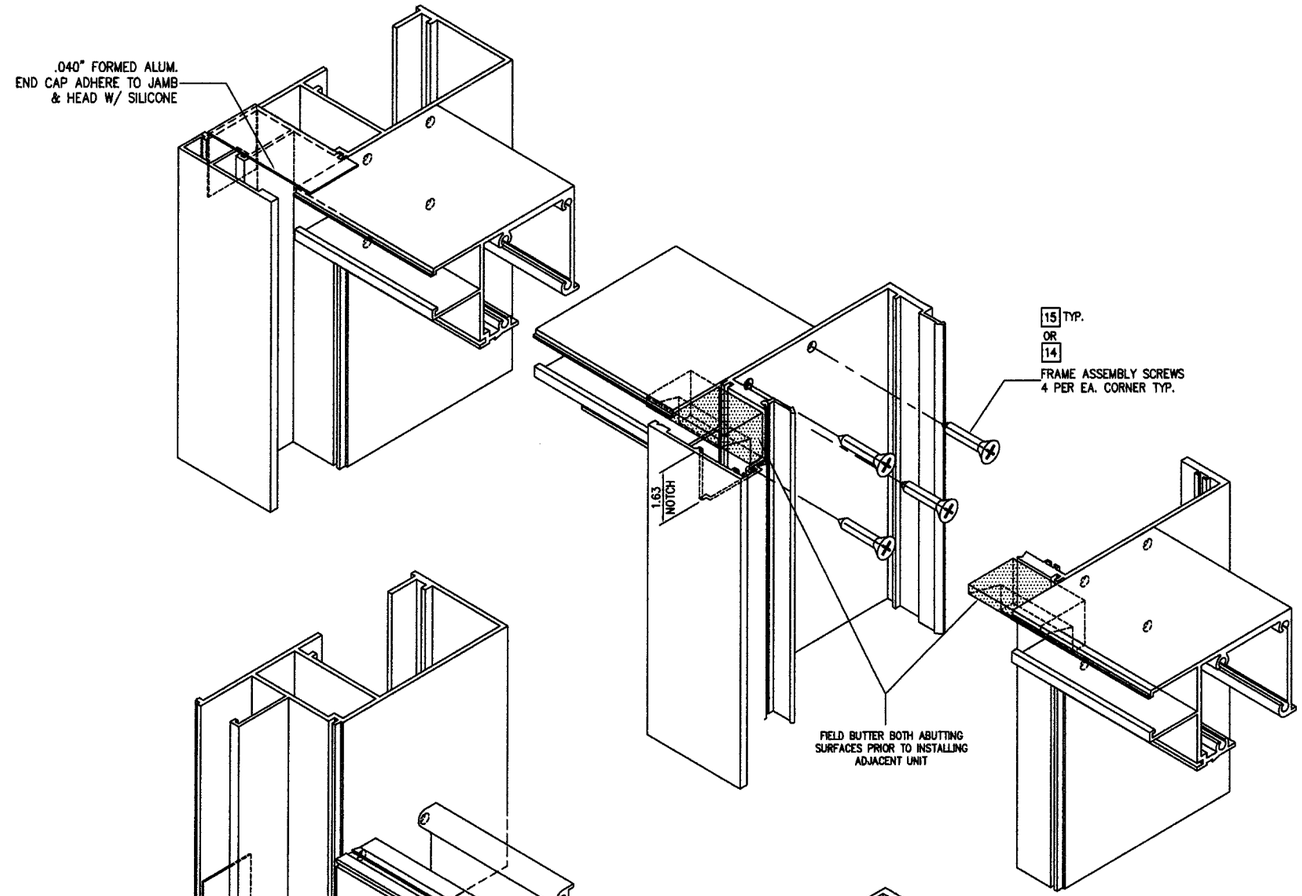

1/25 HEAD RAIL ISOMETRIC JOINERY DETAILS

SCALE: N.T.S.

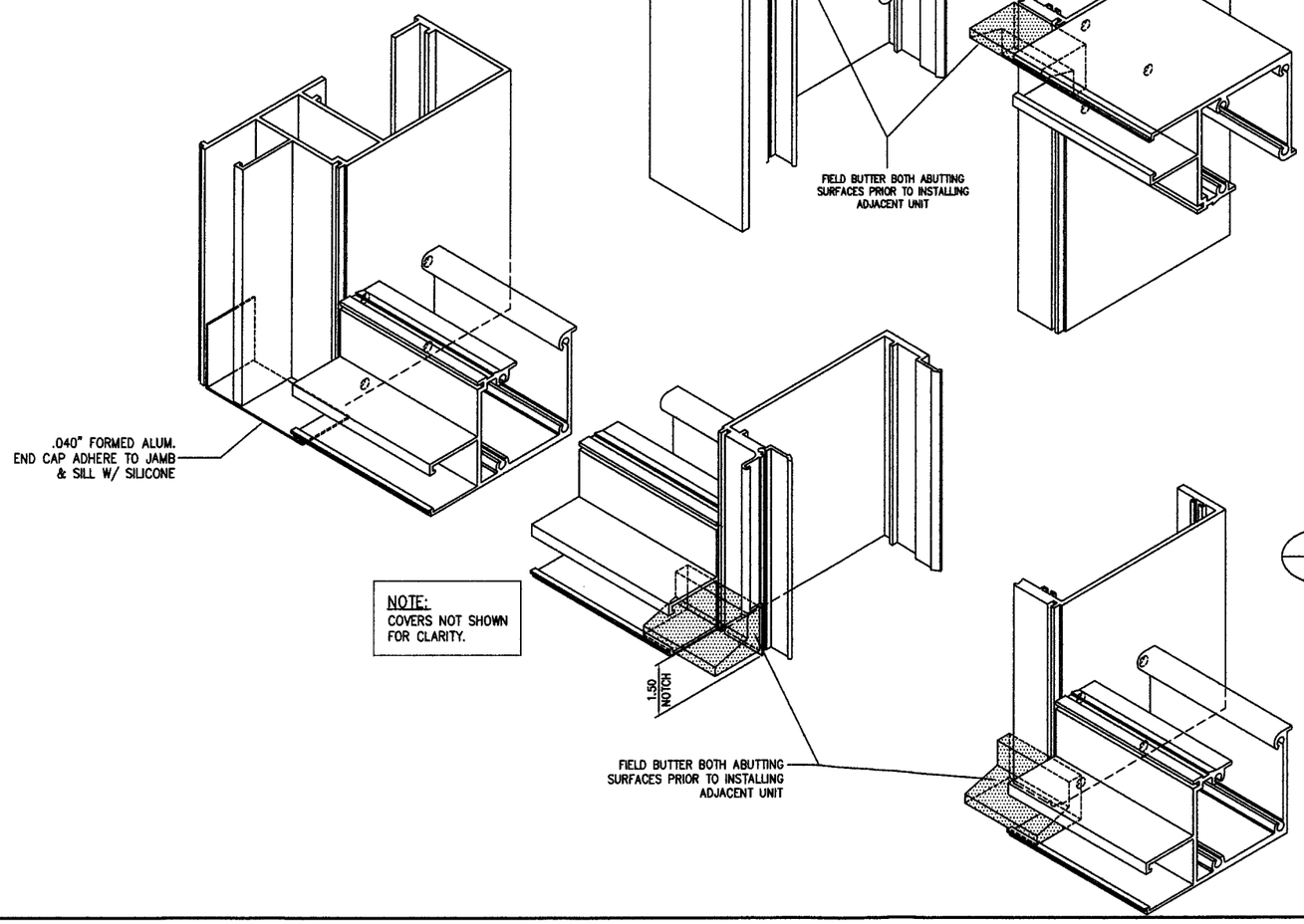

NOTE:
COVERS NOT SHOWN FOR CLARITY.

2/25 SILL RAIL ISOMETRIC JOINERY DETAILS

SCALE: N.T.S.

FOR MIAMI-DADE CO. B.C.C.O.

Approved as complying with the Florida Building Code
Date SEPT. 9, 2014
NOA# 08-0915.15
Miami Dade Product Control Division
By Manuel Perez

enclos corp

2770 Blue Water Road
Eagan, MN 55121-1400
Tel. 651-796-0100 • Fax 651-994-6360
Engineering Locations
Eagan, MN • Montreal, QC, CA • Moncton, NB, CA
St. Louis, MO • Manila, PH

REVISIONS

1	7/5/2009 REV'S PER M.D.B.C.C.O.
2	7/22/2009 FINAL REVISIONS

SEAL:

AUG 17 2009

Reviewed For Structural Integrity Only

BROMLEY • COOK ENGINEERING, INC.
STRUCTURAL ENGINEERING SERVICES
5440 N.W. 33RD AVENUE SUITE 100
FORT LAUDERDALE, FLORIDA 33309
TEL: (954) 772-4524 FAX: (954) 772-4634
CERT. OF AUTH. #00009124
WILLIAM D. COOK P.E.
FLA P.E. # 43904
FLA S.I. # 2008

Date	Scale
7/31/08	

Drawing No.
7030 SS SMI

Drawing Title
7030 SERIES WINDOW WALL
SINGLE SPAN
SMALL MISSILE IMPACT

Sheet No.
25/25