MIAMI-DADE COUNTY, FLORIDA
METRO-DADE FLAGLER BUILDING
**140 WEST FLAGLER STREET, SUITE 1603**
MIAMI, FLORIDA 33130-1563
(305) 375-2901 FAX (305) 375-2908

**BUILDING CODE COMPLIANCE OFFICE (BCCO)**
**PRODUCT CONTROL DIVISION**

# NOTICE OF ACCEPTANCE (NOA)

**ROLL-A-WAY BY QMI**
**1661 Glenlake Avenue**
**Itasca, IL 60143**

**SCOPE:**

This NOA is being issued under the applicable rules and regulations governing the use of construction materials. The documentation submitted has been reviewed by Miami-Dade County Product Control Division and accepted by the Board of Rules and Appeals (BORA) to be used in Miami Dade County and other areas where allowed by the Authority Having Jurisdiction (AHJ).

This NOA shall not be valid after the expiration date stated below. The Miami-Dade County Product Control Division (In Miami Dade County) and/or the AHJ (in areas other than Miami Dade County) reserve the right to have this product or material tested for quality assurance purposes. If this product or material fails to perform in the accepted manner, the manufacturer will incur the expense of such testing and the AHJ may immediately revoke, modify, or suspend the use of such product or material within their jurisdiction. BORA reserves the right to revoke this acceptance, if it is determined by Miami-Dade County Product Control Division that this product or material fails to meet the requirements of the applicable building code.

This product is approved as described herein, and has been designed to comply with the High Velocity Hurricane Zone of the Florida Building Code.

**DESCRIPTION: Roll-a-way Extruded Aluminum Roll Shutter**

**APPROVAL DOCUMENT:** Drawing No. **3-01-024**, titled "US60 Dade County Product Approval", prepared by QMI dated 01/08/02, sheets 1 through 19 of 19 signed and sealed on 11/04/08 by D.L.Fowler, P.E., bearing the Miami-Dade County Product Control Revision stamp with the Notice of Acceptance number and expiration date by the Miami-Dade County Product Control Division.

**MISSILE IMPACT RATING: Large and Small Missile Impact**

**LABELING:** Each unit shall bear a permanent label with the manufacturer's name or logo, city, state and the following statement: "Miami-Dade County Product Control Approved", unless otherwise noted herein.

**RENEWAL** of this NOA shall be considered after a renewal application has been filed and there has been no change in the applicable building code negatively affecting the performance of this product.

**TERMINATION** of this NOA will occur after the expiration date or if there has been a revision or change in the materials, use, and/or manufacture of the product or process. Misuse of this NOA as an endorsement of any product, for sales, advertising or any other purposes shall automatically terminate this NOA. Failure to comply with any section of this NOA shall be cause for termination and removal of NOA.

**ADVERTISEMENT:** The NOA number preceded by the words Miami-Dade County, Florida, and followed by the expiration date may be displayed in advertising literature. If any portion of the NOA is displayed, then it shall be done in its entirety.

**INSPECTION:** A copy of this entire NOA shall be provided to the user by the manufacturer or its distributors and shall be available for inspection at the job site at the request of the Building Official.

This NOA **revises NOA 07-0625.08** and consists of this page 1, evidence page E1 and E2, as well as approval document mentioned above.

The submitted documentation was reviewed by **Mohammed Iqbal Shaikh, P.E.**

MIAMI-DADE COUNTY APPROVED 12/15/08

**ROLL-A-WAY BY QMI**

## NOTICE OF ACCEPTANCE: EVIDENCE SUBMITTED

**A. DRAWINGS**

1. Manufacturer's die drawings and sections.
2. Drawing No. **3-01-024,** titled "US60 Dade County Product Approval", prepared QMI dated 01/08/02, Sheets 1 thru 19 of 19 signed and sealed on 11/04/08 by D.L.Fowler, P.E.

**B. TESTS**

1. Test reports on 1) Uniform Static Air Pressure Test, Loading per FBC TAS 202-94 along with marked-up drawings and installation diagram, prepared by American Test Lab, Inc., Test Report No. ATL– 01009, dated May 22, 2001, signed and sealed by William R. Mehner, P.E.
   ***"Submitted under NOA# 05-0725.13"***
2. Test reports on 1) Uniform Static Air Pressure Test, Loading per FBC TAS 202-94 along with marked-up drawings and installation diagram, prepared by Hurricane Engineering & Testing, Inc., Test Report No. HETI – 99-830-A, dated August 20, 1999, signed and sealed by Hector M. Medina, P.E.
   ***"Submitted under NOA# 05-0725.13"***
3. Test reports on 1) Uniform Static Air Pressure Test, Loading per FBC TAS 202-94 along with marked-up drawings and installation diagram, prepared by Hurricane Engineering & Testing, Inc., Test Report No. HETI – 99-830-B, dated August 20, 1999, signed and sealed by Hector M. Medina, P.E.
   ***"Submitted under NOA# 05-0725.13"***
4. Test reports on 1) Uniform Static Air Pressure Test, Loading per FBC TAS 202-94 along with marked-up drawings and installation diagram, prepared by Hurricane Engineering & Testing, Inc., Test Report No. HETI – 99-830-C, dated August 20, 1999, signed and sealed by Hector M. Medina, P.E.
   ***"Submitted under NOA# 05-0725.13"***

**C. CALCULATIONS**

1. Anchor verification calculations and structural analysis, complying with FBC-2004, prepared by D.L.Fowler, P.E, dated 5/23/06, signed and sealed by D.L.Fowler, P.E.
   ***"Submitted under NOA# 05-0725.13"***

**D. QUALITY ASSURANCE**

**Miami- Dade County Product Control Office**

**E. MATERIAL CERTIFICATIONS**

**NONE**

**Mohammed Iqbal Shaikh, P.E.**
**Sr. Building Code Compliance Specialist**
**NOA No. 08-0929.02**
**Expiration Date: July 15, 2012**
**Approval Date: December 11, 2008**

**ROLL-A-WAY BY QMI.**

## NOTICE OF ACCEPTANCE: EVIDENCE SUBMITTED

**F. STATEMENTS**

1. Letter of revisions and Code Compliance from Roll-A-Way Securities Shutter, dated June 18, 2007 signed by Donald E. Fowler, P.E. "***Submitted Under 07-0625.08***"
2. Statement letter of "No Changes" from Roll-A-Way Securities Shutter, dated June 19, 2007, signed by Jerry Hicks. "***Submitted Under 07-0625.08***"
3. Letter from QMI dated 09/22/08 stating that they have legally purchased all assets from Valco Enterprises Limited, signed by D.L.Fowler, P.E.
4. Letter from Valco Enterprises Limited dated 09/22/08 for the legal sale signed by John Coffill.
5. A copy of Execution Version of the bill of sale dated 01/22/08

**G. OTHER**

1. **NONE**

**Mohammed Iqbal Shaikh, P.E.**
**Sr. Building Code Compliance Specialist**
**NOA No. 08-0929.02**
**Expiration Date: July 15, 2012**
**Approval Date: December 11, 2008**

# HURRICANE ROLL SHUTTER
# HIGH VELOCITY HURRICANE ZONE
# PRODUCT APPROVAL

GENERAL NOTES:

1. THE COMPONENTS & CLADDING DESIGNS, INCLUDED HEREIN ARE FLORIDA BUILDING CODE (FBC), 2004 & 2007 EDITIONS , COMPLIANT.
2. DESIGN CRITERIA FOR ALUMINUM, MINIMUM MECHANICAL PROPERTIES, AND SAFETY FACTORS ARE IN ACCORDANCE WITH THE "ALUMINUM DESIGN MANUAL" PER FBC REFERENCE.
3. ALUMINUM ALLOYS: ALL EXTRUSIONS SHALL BE ALLOY AS NOTED.
4. STEEL SURFACES TO BE PLACED IN CONTACT WITH ALUMINUM SHALL BE GIVEN ONE COAT OF ZINC CHROMATE PRIMER IN ACCORDANCE WITH FEDERAL SPEC. NO. TTP-645, OR BE GALVANIZED.
5. ANCHORS SHALL BE AS LISTED, AND SPACED AS SHOWN ON DETAILS. ANCHOR EMBEDMENT TO BASE MATERIAL SHALL BE BEYOND WALL DRESSING OR STUCCO.
6. ALL BOLTS, NUTS, AND WASHERS SHALL BE STAINLESS STEEL OR ALUMINUM ALLOY 2024-T4 OR 7075-T6, OR PLATED STEEL.
7. ELECTRICAL CERTIFICATION PER UL LISTING - FILE E219544.
8. DESIGN CRITERIA: FOR MULTIPLE SPANS, THE COMBINED MAX DEFLECTION OF HEADER & STORM BARS IS 2".
   FOR MULLIONS MAX DEFLECTION < L/180.
9. ANCHORING OR LOADING CONDITIONS OTHER THAN THOSE SHOWN IN THESE DETAILS ARE NOT PART OF THIS APPROVAL.
10. ALTERATIONS OR ADDITIONS TO THE DOCUMENT ARE NOT PERMITTED. DOCUMENT SHALL BEAR THE ORIGINAL SEAL, SIGNATURE (IN RED), AND DATE OF THE PROFESSIONAL ENGINEER LISTED.
11. THIS PRODUCT APPROVAL DOCUMENT IS SUITABLE FOR USE ONLY AS SPECIFICALLY STATED ON THE COMBINED PAGES OF THE ENTIRE DOCUMENT. ANY DEVIATIONS SHALL BE REVIEWED AND APPROVED SEPARATELY.

DESIGN LOADS SHALL BE CALCULATED AS PER REQUIREMENTS OF ASCE 7-05 & FBC EXCEPTIONS.

**PRODUCT MARKING**

A LABEL SHALL BE AFFIXED ON UNIT AT RIGHT BOTTOM OF BOX WITH THE FOLLOWING STATEMENT:

"ROLL-A-WAY STORM AND SECURITY SHUTTERS BY QMI, ST. PETERSBURG, FL.
DADE COUNTY PRODUCT CONTROL APPROVED"

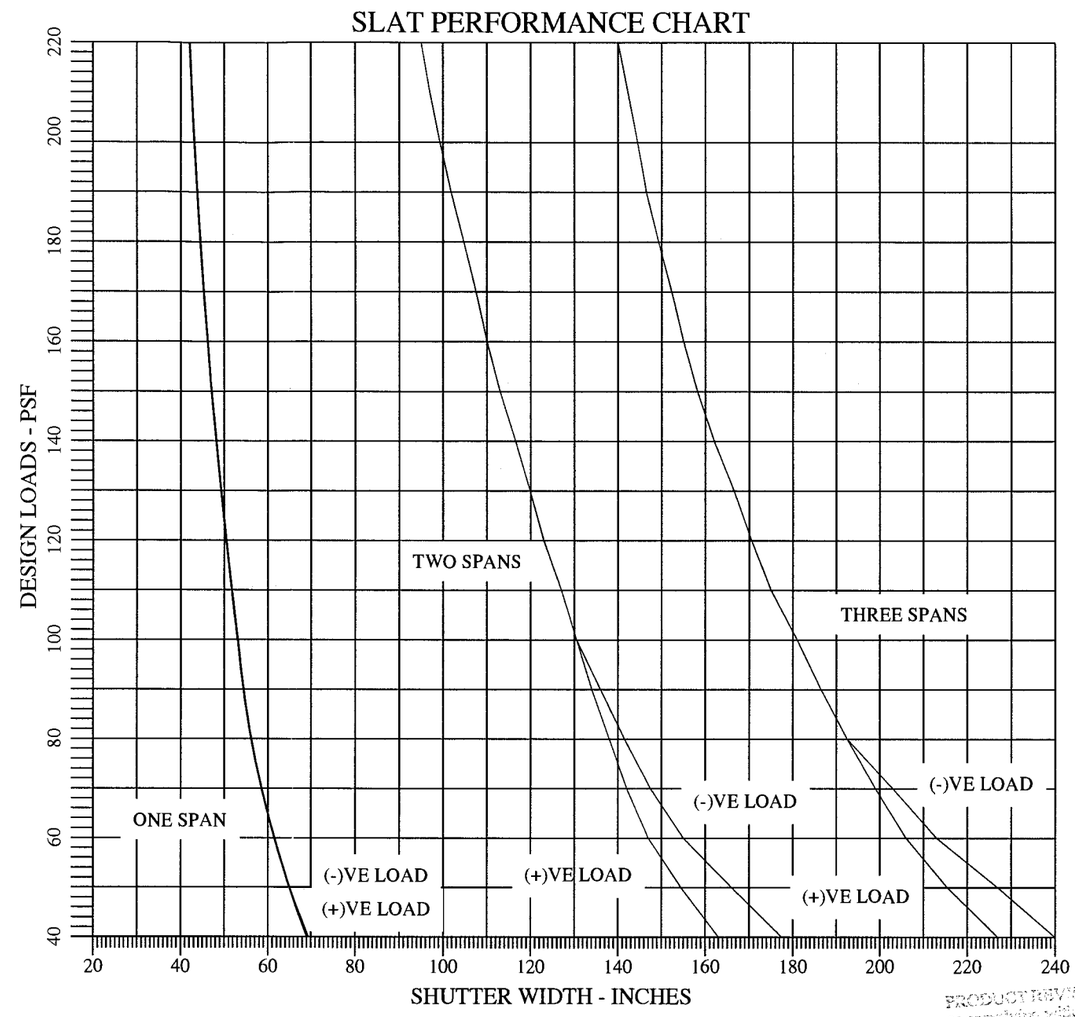


PRODUCT APPROVED as complying with the Florida Building Code Acceptance No. 08-0929.02 Expiration Date 07/15/12 By Miami Dade Product Control Division

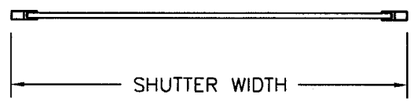


ONE SPAN

PLAN VIEW

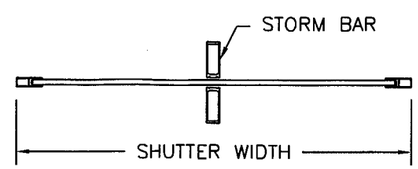


TWO SPANS

PLAN VIEW

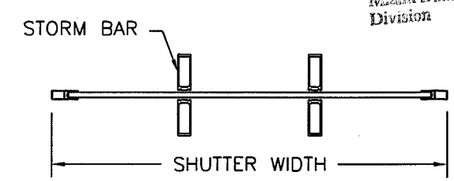


THREE SPANS

PLAN VIEW

Roll-a-way™ THE ORIGINAL

ROLL-A-WAY BY QMI
1661 GLENLAKE AVENUE
ITASCA, IL 60143
COPYRIGHT © 2008
QUALITAS MAUNFACTURING INC.

DRAWING TITLE:
US60 DADE COUNTY
PRODUCT APPROVAL

D.L. Fowler
Professional Engineer
Florida License No.
PE0050458

11-4-08

| | |
|---|---|
| DRAWN: | DJN |
| DATE: | 03-15-02 |
| APPROVED: | DF |
| DATE: | 1-8-02 |
| DRAWING NO: | 3-01-024 |
| SIZE: B | REV: A |
| SCALE: | 3/8" = 1'-0" |
| SHEET: | 1 OF 19 |

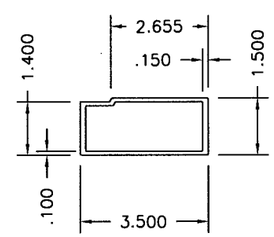


HEADER TUBE TYPE "1"
ALUMINUM 6005-T5

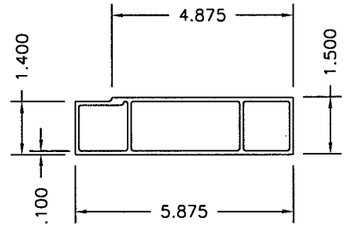


HEADER TUBE TYPE "2"
ALUMINUM 6005-T5

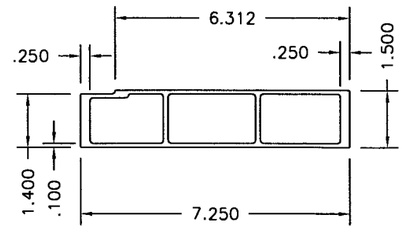


HEADER TUBE TYPE "3"
ALUMINUM 6005-T5

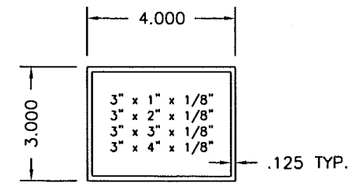


BUILT-OUT TUBES
ALUMINUM 6005-T5 & 6063-T6

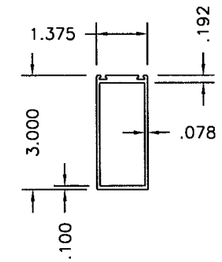


3" STORM BAR
ALUMINUM 6005-T5

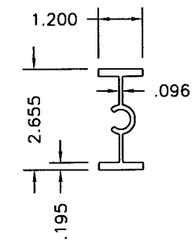


3" STORM BAR INSERT
ALUMINUM 6005-T5

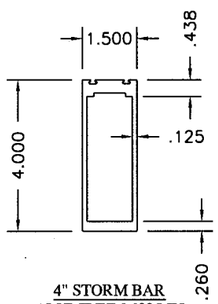


4" STORM BAR
ALUMINUM 6005-T5

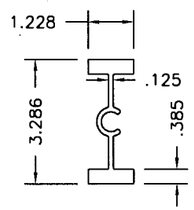


4" STORM BAR INSERT
ALUMINUM 6005-T5

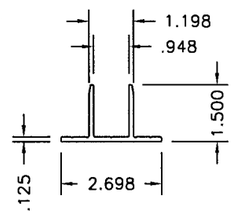


3" STORM BAR BRACKET
ALUMINUM 6005-T5

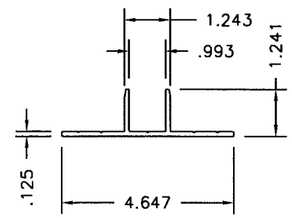


4" STORM BAR BRACKET
ALUMINUM 6005-T5

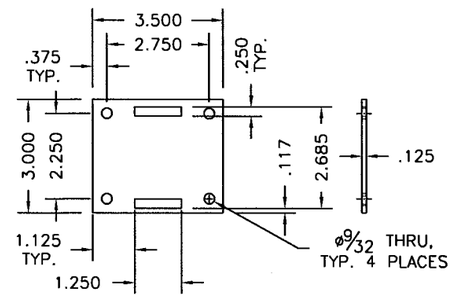


3" REMOVABLE STORM BAR BASE
ALUMINUM 6061-T6

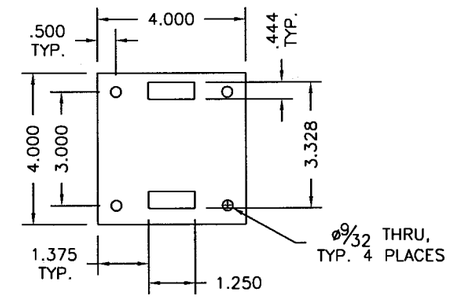


4" REMOVABLE STORM BAR BASE
ALUMINUM 6061-T6

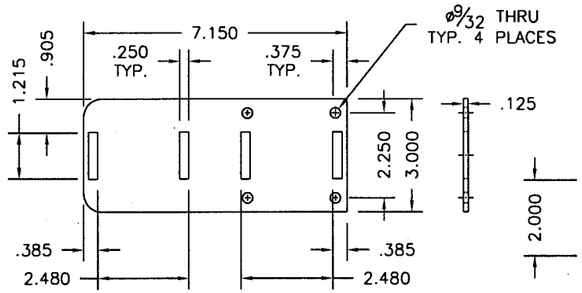


3" REMOVABLE STORM BAR BASE, EXTENDED
ALUMINUM 6061-T6 OR 6005-T5

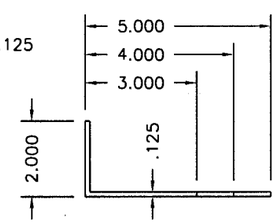


ALUMINUM ANGLE
ALUMINUM 6063-T5

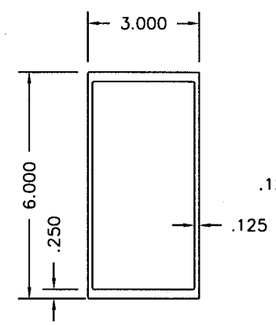


3" x 6" MULLION
ALUMINUM 6005-T5

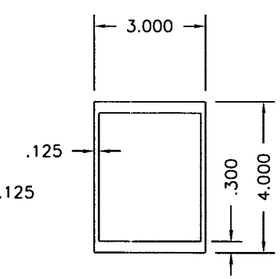


3" x 4" MULLION
ALUMINUM 6005-T5

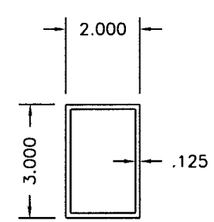


2" x 3" MULLION
ALUMINUM 6005-T5

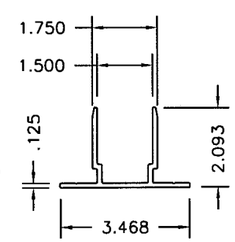


2" MULLION BRACKET
ALUMINUM 6005-T5

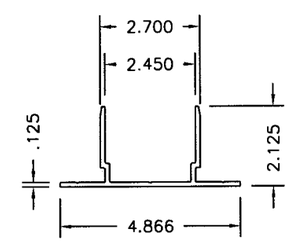


3" MULLION BRACKET
ALUMINUM 6005-T5

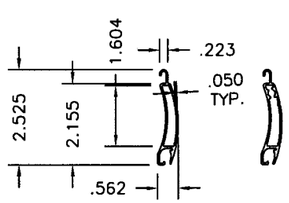


EXTRUDED ALUMINUM SLAT
ALUMINUM 6063-T6

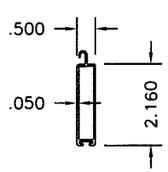


EXTRUDED ALUMINUM BOTTOM SLAT
ALUMINUM 6063-T6

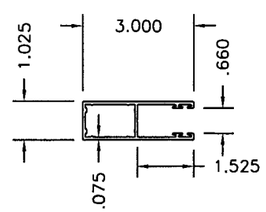


SYSTEM I TRACK
ALUMINUM 6063-T6

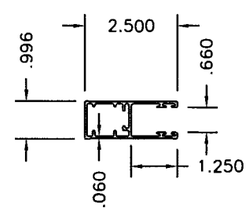


SYSTEM II TRACK*
ALUMINUM 6063-T6

* THIS ALTERNATE TRACK MAY ONLY BE USED AT SLAT PERFORMANCE CHART DESIGN LOADS MULTIPLYED BY 90% OR 0.9 TO REDUCE ALLOWABLE LOADING.

PRODUCT APPROVED
Miami-Dade County, Florida
Application No. 08-0929.02
Expiration Date 07/15/12
By M Khan
Miami-Dade Product Control Division

**ROLL-A-WAY BY QMI**
1661 GLENLAKE AVENUE
ITASCA, IL 60143

COPYRIGHT © 2008 QMI

DRAWING TITLE:
US60 DADE COUNTY
PRODUCT APPROVAL

D.L. Fowler
Professional Engineer
Florida License No.
PE0050458

11-4-08

| | |
|---|---|
| DRAWN: | DJN |
| DATE: | 03-15-02 |
| APPROVED: | DF |
| DATE: | 07-08-05 |
| DRAWING NO: | 3-01-024 |
| SIZE: B | REV: A |
| SCALE: | 3/8" = 1'-0" |
| SHEET: | 2 OF 19 |

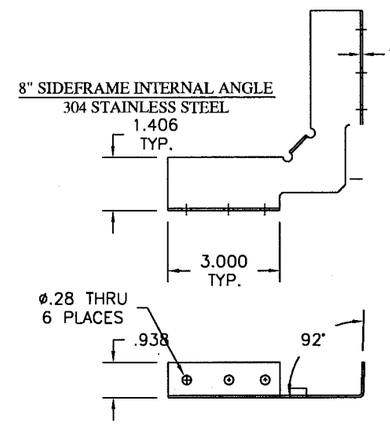


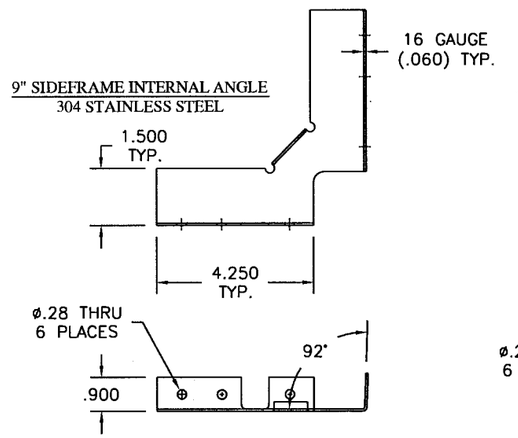


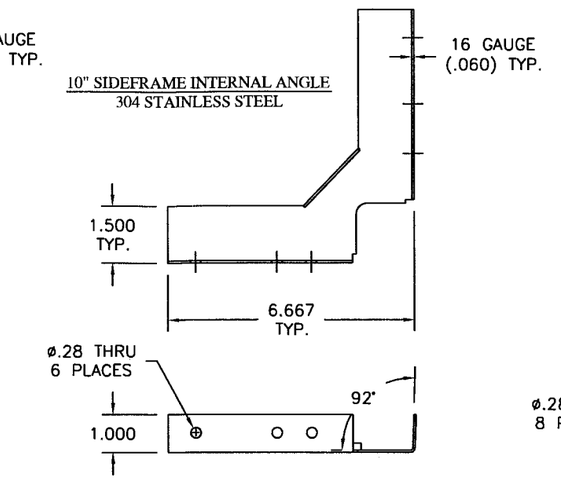


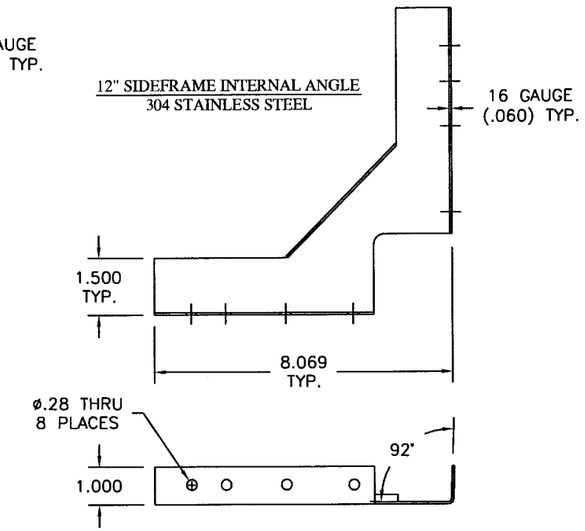


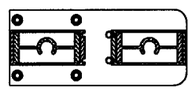

3" SPRING-LOADED STORM BAR
TO BUILD-OUT TUBE

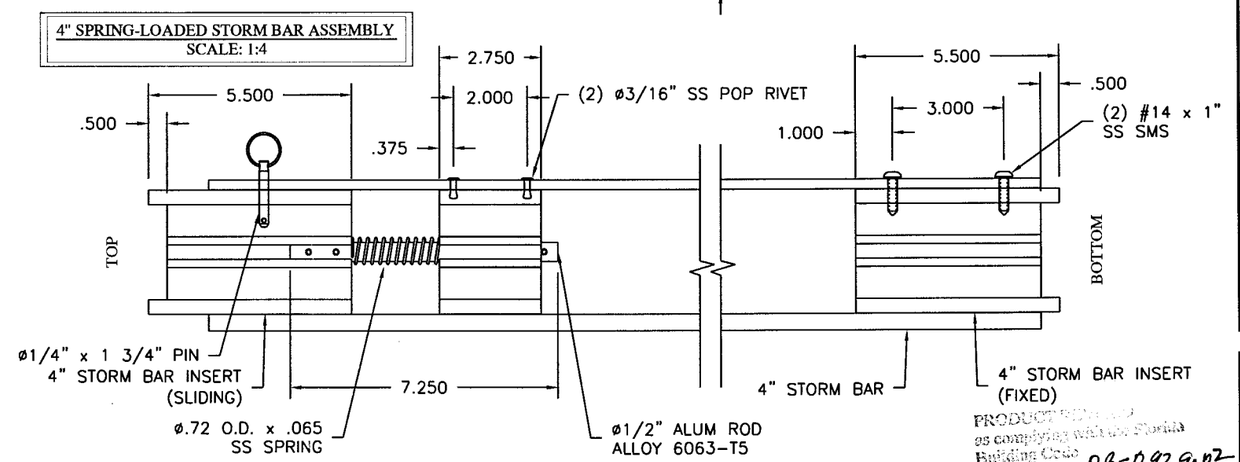


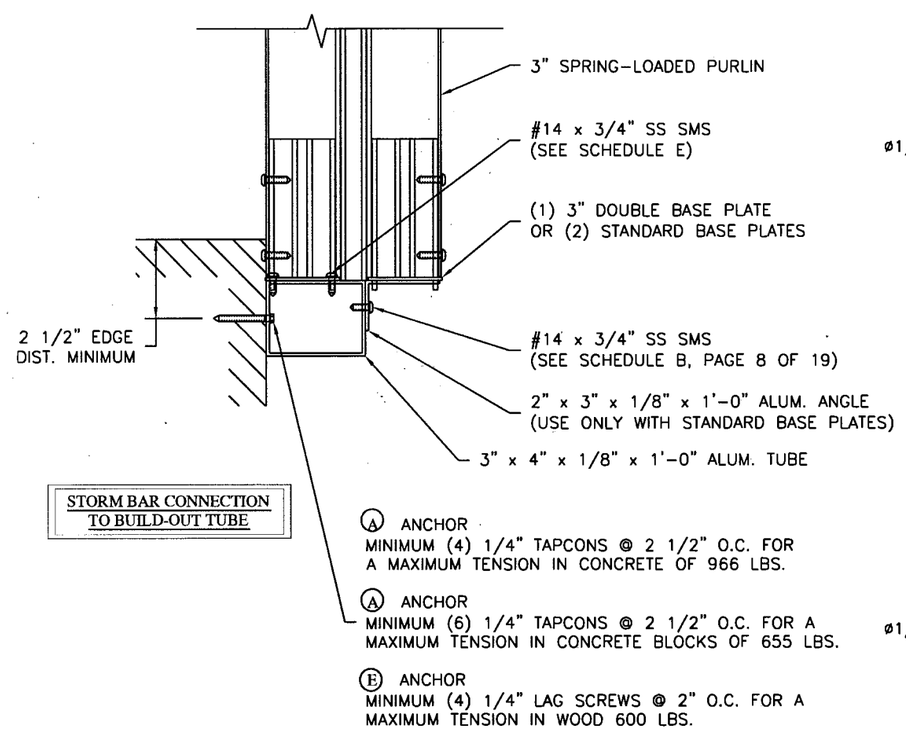


STORM BAR CONNECTION
TO BUILD-OUT TUBE

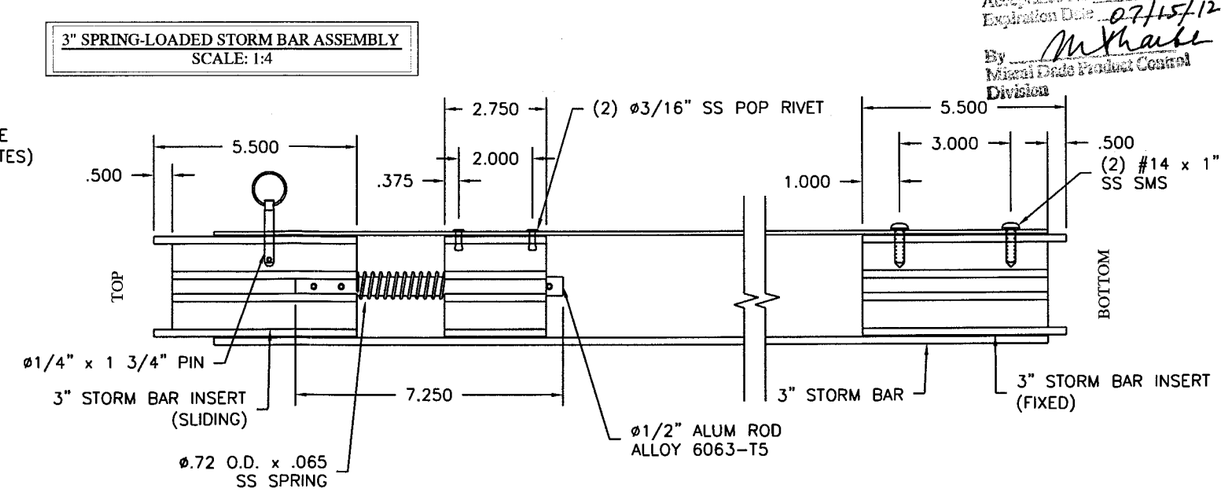


PRODUCT APPROVAL
as complying with the Florida
Building Code
Acceptance No. 08-0929.02
Expiration Date 07/15/12
By M Thake
Miami Dade Product Control
Division

ROLL-A-WAY BY QMI
1661 GLENLAKE AVENUE
ITASCA, IL 60143
COPYRIGHT © 2008
QMI

DRAWING TITLE:
US60 DADE COUNTY
PRODUCT APPROVAL

D.L. Fowler
Professional Engineer
Florida License No.
PE0050458

11-4-08

| | |
|---|---|
| DRAWN: | DJN |
| DATE: | 03-15-02 |
| APPROVED: | DF |
| DATE: | 07-08-05 |
| DRAWING NO: | 3-01-024 |
| SIZE: B | REV: A |
| SCALE: | 3/8" = 1'-0" |
| SHEET: | 3 OF 19 |

# 3" SPRING-LOADED STORM BAR ASSEMBLY DETAIL

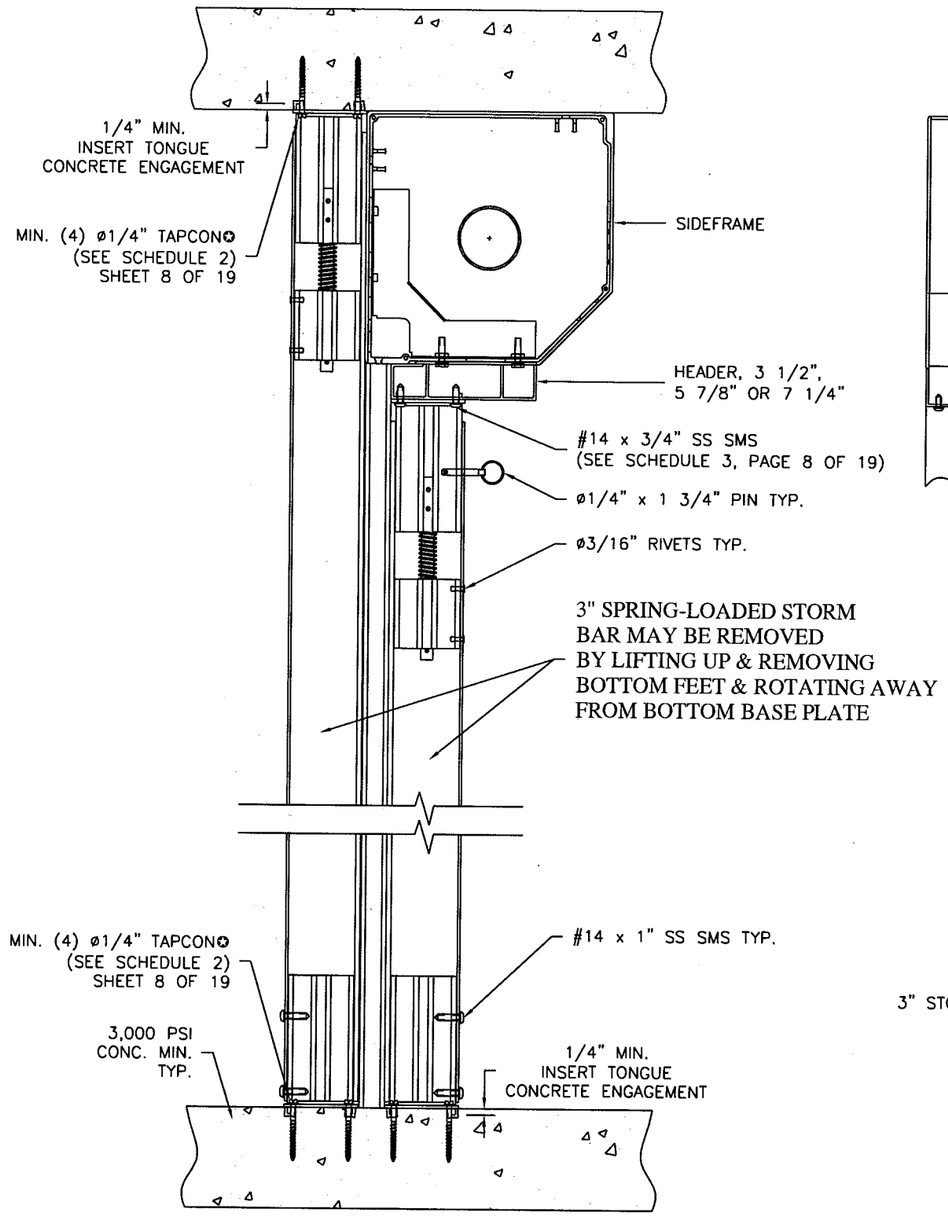


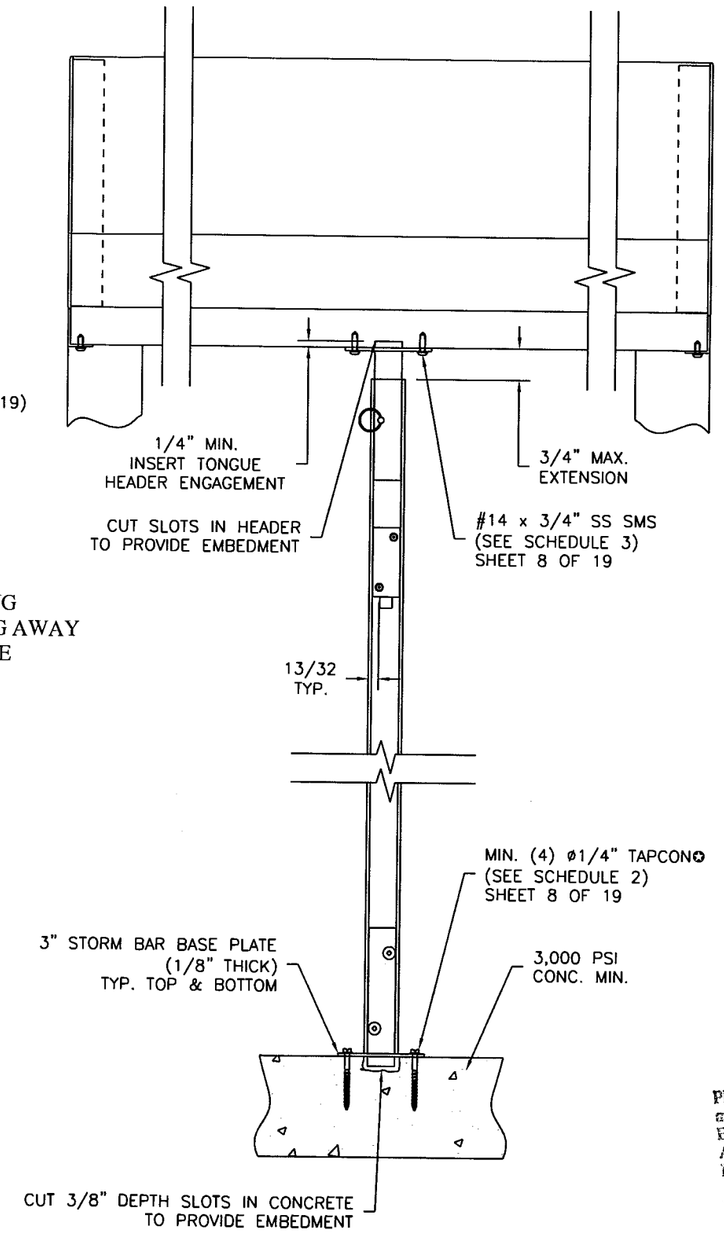


NOTES:
1. SEE PAGES 16 THRU 19 FOR ALLOWABLE SPANS.
2. ADHESIVE WARNING LABELS SHALL BE PLACED ON THE BOTTOM SIDE OF HEADER WITHIN 6" OF STORM BAR.

✪ (4) TAPCONS AS ANCHORS ARE LIMITED TO A SHEAR REACTION OF 1932 LBS..

PRODUCT REVISED
as complying with the Florida
Building Code
Acceptance No. 08-0929.02
Expiration Date 07/15/12
By M. Lach
Miami Dade Product Control
Division


ROLL-A-WAY BY QMI
1661 GLENLAKE
ITASCA, IL 60143


COPYRIGHT © 2008
QMI


DRAWING TITLE:
US60 DADE COUNTY
PRODUCT APPROVAL

D.L. Fowler
Professional Engineer
Florida License No.
PE0050458
11-4-08

| | |
|---|---|
| DRAWN: | DJN |
| DATE: | 03-15-02 |
| APPROVED: | DF |
| DATE: | 07-08-05 |
| DRAWING NO: | 3-01-024 |
| SIZE: B | REV: A |
| SCALE: | 1"= 6" |
| SHEET: | 4 OF 19 |

# 4" SPRING-LOADED STORM BAR ASSEMBLY DETAIL

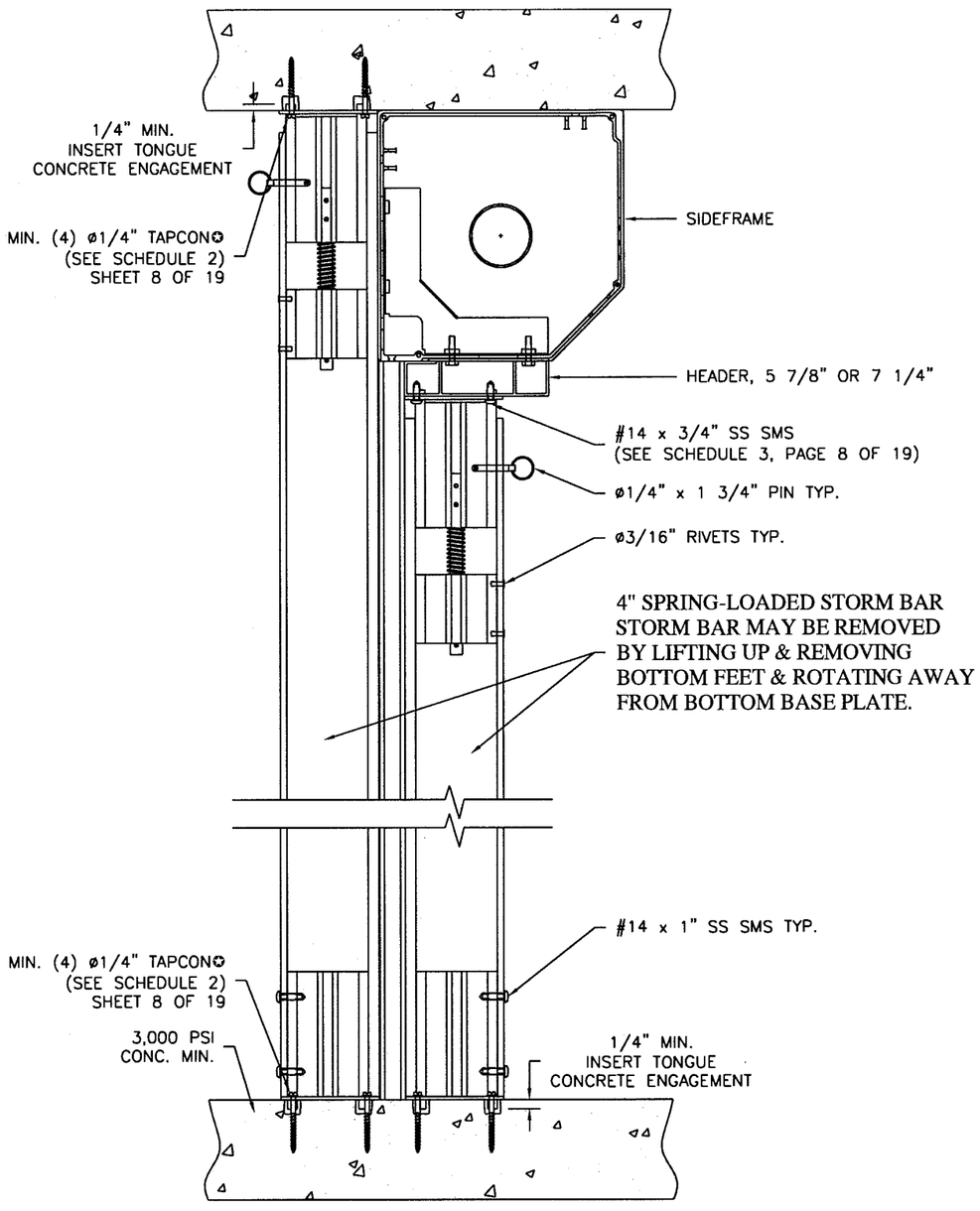


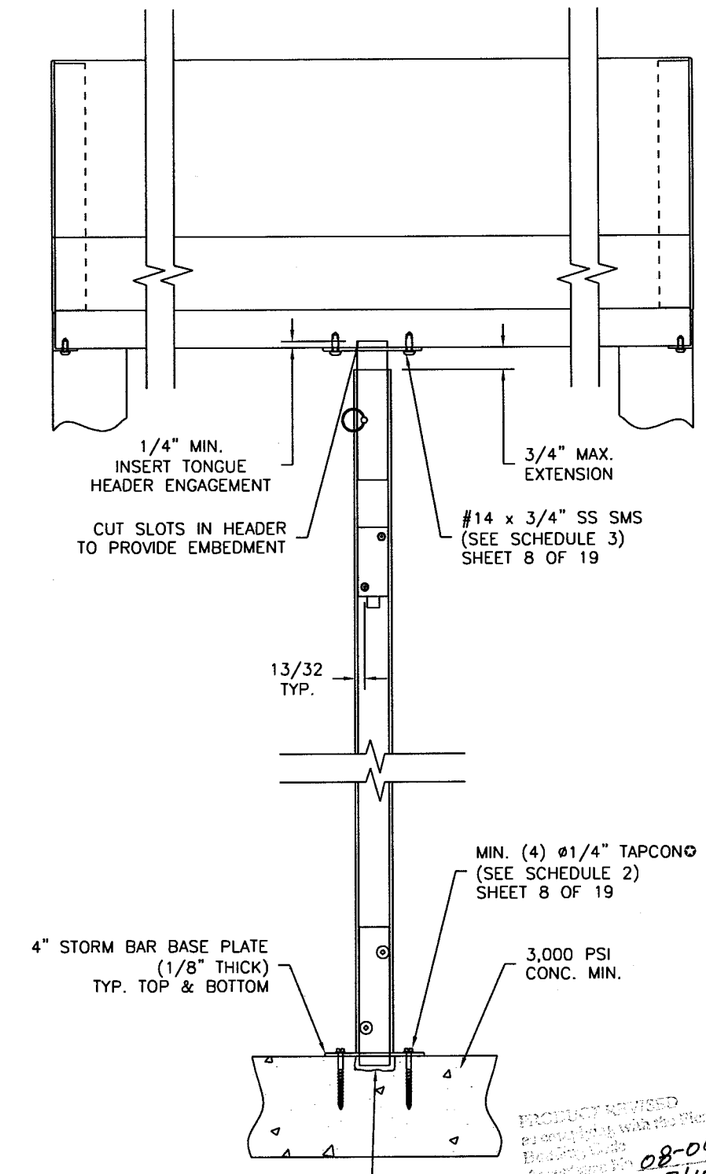


NOTES:
1. SEE PAGES 16 THRU 19 FOR ALLOWABLE SPANS.
2. ADHESIVE WARNING LABELS SHALL BE PLACED ON THE BOTTOM SIDE OF HEADER WITHIN 6" OF STORM BAR.

✪ (4) TAPCONS AS ANCHORS ARE LIMITED TO A SHEAR REACTION OF 1932 LBS..

PRODUCT REVISED
Product Control Section Florida
Building Code
Approval No. 08-0929.02
Expiration Date 07/15/12
By M Khan
Miami-Dade Product Control
Division


ROLL-A-WAY BY QMI
1661 GLENLAKE AVENUE
ITASCA, IL 60143


COPYRIGHT © 2008
QMI


DRAWING TITLE:
US60 DADE COUNTY
PRODUCT APPROVAL

D.L. Fowler
Professional Engineer
Florida License No.
PE0050458
11-4-08

| | |
|---|---|
| DRAWN: | DJN |
| DATE: | 03-15-02 |
| APPROVED: | DF |
| DATE: | 07-08-05 |
| DRAWING NO: | 3-01-024 |
| SIZE: B | REV: A |
| SCALE: | 1" = 6" |
| SHEET: | 5 OF 19 |

WALL MOUNTS

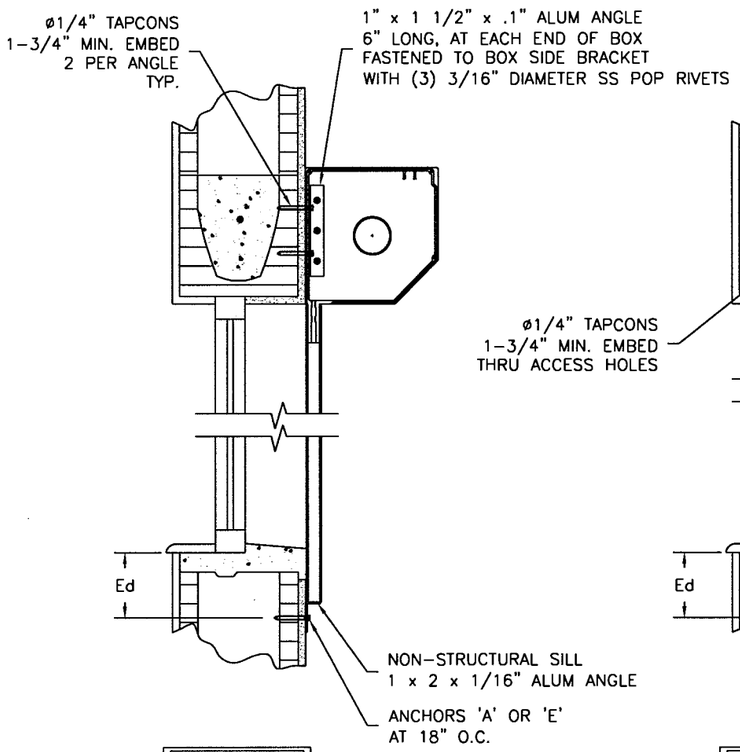


SECTION A-A
SCALE: 1:10

BUILT-OUT CONDITION

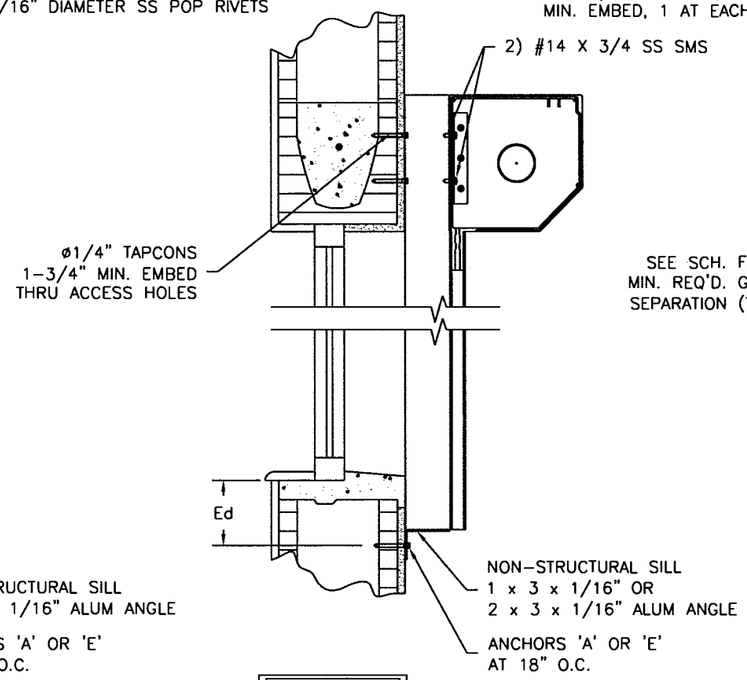


SECTION B-B
SCALE: 1:10

INSIDE MOUNTS

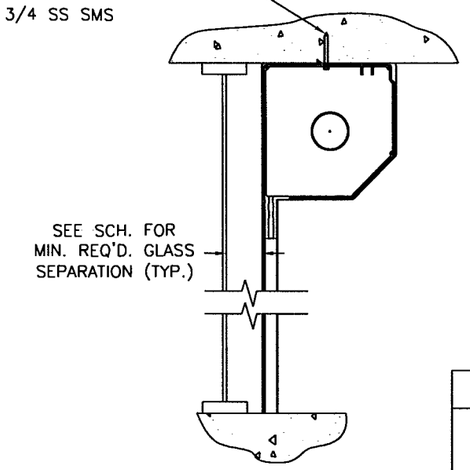


SECTION C-C
SCALE: 1:10

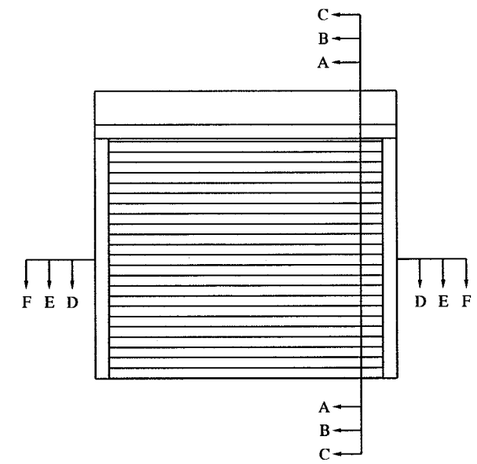


TYPICAL ELEVATION
SINGLE SPAN

| MINIMUM SEPARATION REQ'D. FROM GLASS | |
|---|---|
| FOR INSTALLATIONS ABOVE 30 FT. OF GRADE DUE TO WIND LOAD | FOR INSTALLATIONS UP TO 30 FT. ABOVE GRADE DUE TO LARGE MISSILE IMPACT |
| 3" | 3-3/4" |
| NOTE: IF ANY PART OF THE SHUTTER IS LESS THAN 30' ABOVE GRADE LARGE MISSILE IMPACT REQUIREMENTS PREVAIL FOR THE ENTIRE SHUTTER | |

Ed = TYPICAL EDGE DISTANCE
CONC. & BLOCK = 12d (12 ANCHOR DIAMETERS)
WOOD = 5d

ANCHORS: EMBEDMENT & EDGE DISTANCES SHOWN ARE BEYOND THE WALL & FLOOR COVERING (STUCCO, TILES, ETC.)

| ANCHOR TYPE | CHART #, PG 10 OF 19 | | |
|---|---|---|---|
| | CONC. | BLOCK | WOOD |
| A | 3 | 1 | – |
| E | – | – | 4 |

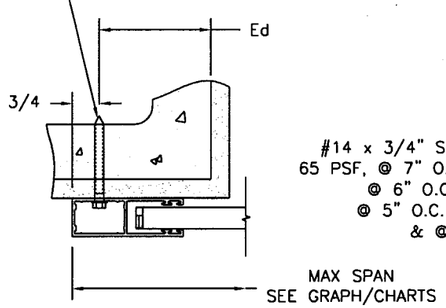


SECTION D-D
SCALE: 1:4

| ANCHOR TYPE | CHART#, PG 10 OF 19 | | |
|---|---|---|---|
| | CONC. | BLOCK | WOOD |
| A | 5 | 3 | – |
| E | – | – | 3 |

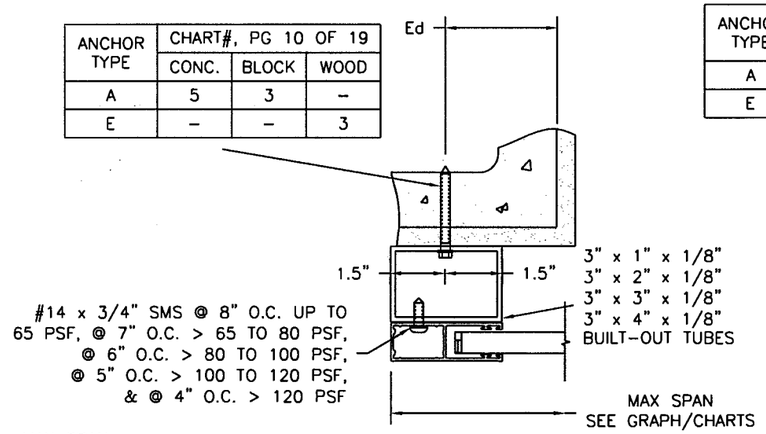


SECTION E-E
SCALE: 1:4

| ANCHOR TYPE | CHART#, PG 10 OF 19 | | |
|---|---|---|---|
| | CONC. | BLOCK | WOOD |
| A | 2 | 1 | – |
| E | – | – | 4 |

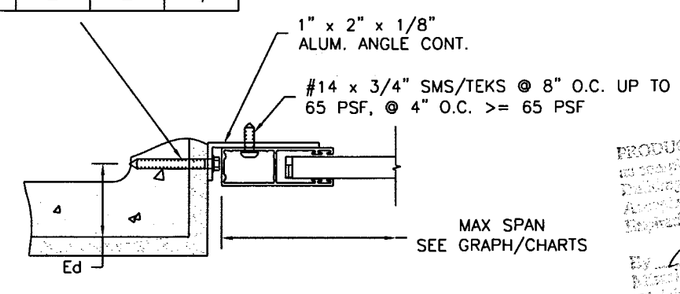


SECTION F-F
SCALE: 1:4

PRODUCT REVISED
to comply with the Florida
Building Code
Application No. 08-0929.12
Expiration Date 07/15/12
By M Shah
Miami-Dade Product Control
Division

TYPICAL SLAT ENGAGEMENT
INSIDE 3" TRACK = 1 – 1/4" MIN.
INSIDE 2 1/2" TRACK = 1" MIN.

ROLL-A-WAY BY QMI
1661 GLENLAKE AVENUE.
ITASCA, IL 60143
COPYRIGHT © 2008
QMI

DRAWING TITLE:
US60 DADE COUNTY
PRODUCT APPROVAL

D.L. Fowler
Professional Engineer
Florida License No.
PE0050458
11-4-08

| | |
|---|---|
| DRAWN: | DJN |
| DATE: | 03-15-02 |
| APPROVED: | DF |
| DATE: | 07-08-05 |
| DRAWING NO: | 3-01-024 |
| SIZE: B | REV: A |
| SCALE: | 3/8" = 1'-0" |
| SHEET: | 6 OF 19 |

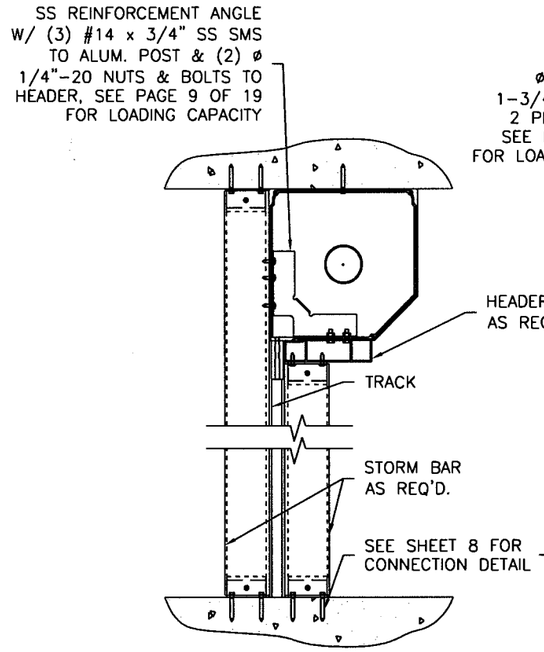


MULTIPLE SPAN SECTION
CEILING TO FLOOR MOUNTS

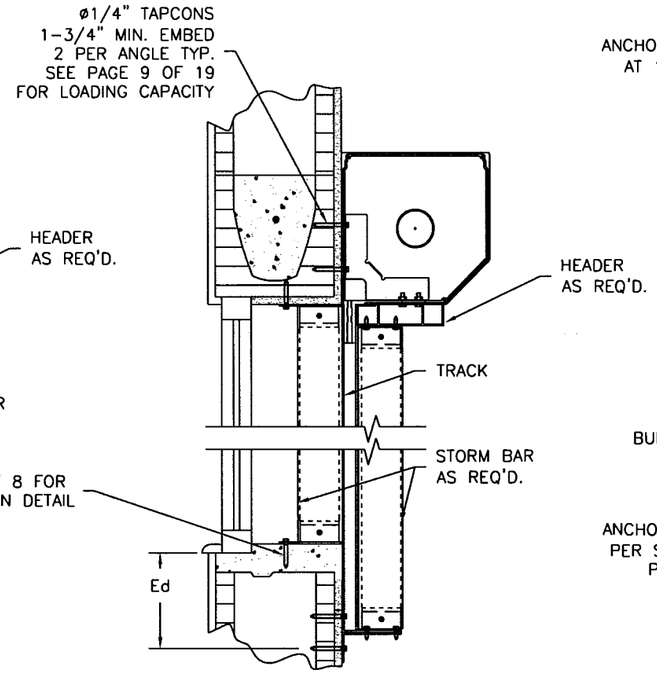


MULTIPLE SPAN SECTION
WALL MOUNTS

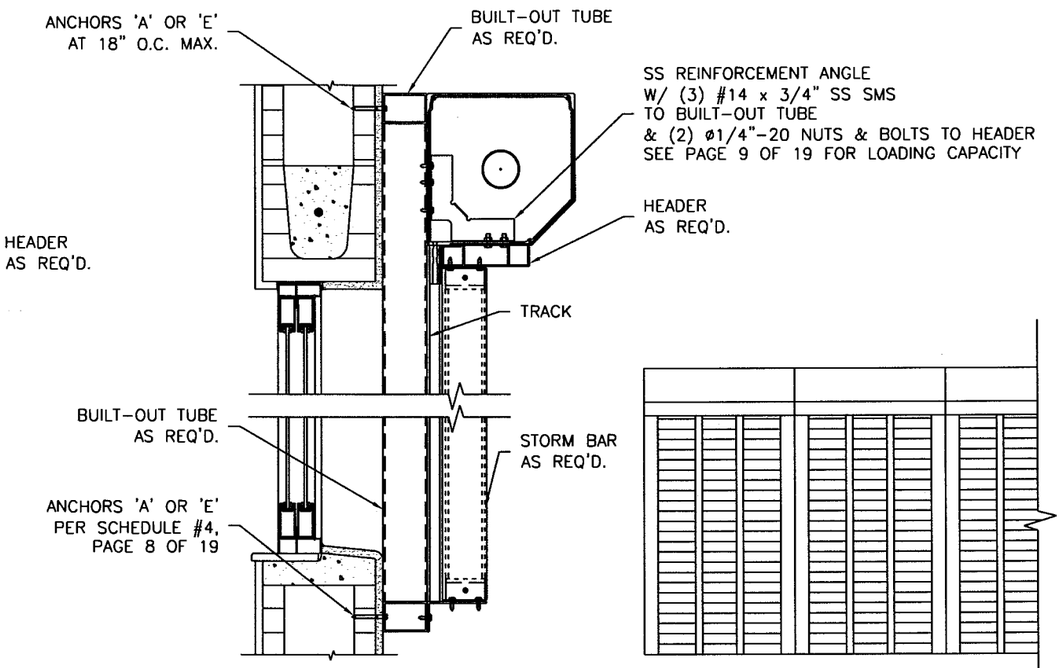


MULTIPLE SPAN SECTION
BUILT-OUT

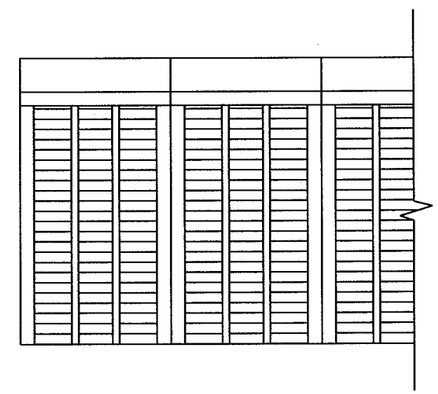

TYPICAL ELEVATION
MULTIPLE SPAN

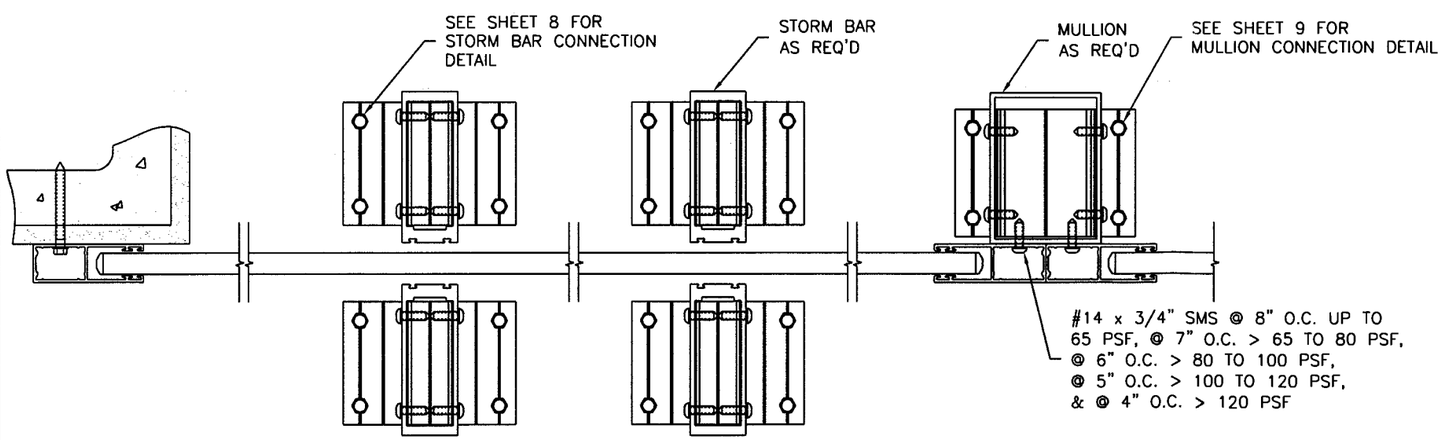


MULTIPLE SPAN PLAN
HEADER NOT SHOWN

PRODUCT REVIEWED
as complying with the Florida
Building Code
Application No. 08-0929.02
Expiration Date 07/15/12
By M Thach
Miami-Dade Product Control
Division

**ROLL-A-WAY BY QMI**
1661 GLENLAKE AVENUE
ITASCA, IL 60143
COPYRIGHT © 2008
QMI

DRAWING TITLE:
US60 DADE COUNTY
PRODUCT APPROVAL

D.L. Fowler
Professional Engineer
Florida License No.
PE0050458

11-4-08

| | |
|---|---|
| DRAWN: | DJN |
| DATE: | 03-15-02 |
| APPROVED: | DF |
| DATE: | 07-08-05 |
| DRAWING NO: | 3-01-024 |
| SIZE: B | REV: A |
| SCALE: | 3/8" = 1'-0" |
| SHEET: | 7 OF 19 |

ALL DIMENSIONS SHOWN Sb, Sw, Sb ETC. ARE IN INCHES.

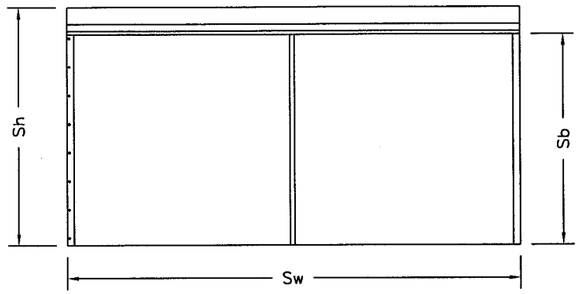


FACTOR = 1.25 FOR 2 SPANS
= 1.10 FOR 3 SPANS
Sb = STORM BAR HEIGHT

LOAD ON STORM BAR ANCHOR: $P = \frac{Sw \times Sb \times PSF/144 \times FACTOR}{2 \times (\#\ OF\ SPANS)}$

IF P > CAPACITY OF FASTENERS SHOWN, ANCHORAGE SYSTEM SHALL BE DESIGNED ON JOB TO JOB BASIS.

2 SPAN LOADING OVER 2070 LBS AND 3 SPAN LOADING OVER 1035 LBS SHALL REQUIRE DOUBLE SS SIDEFRAME BRACKETS.

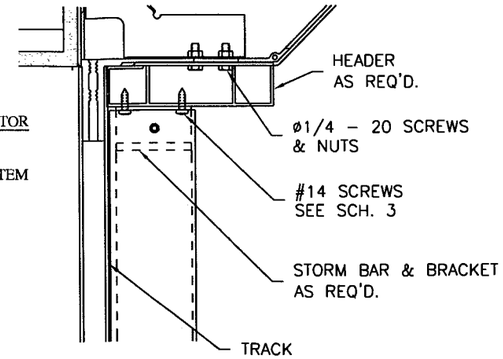


STORM BAR CONNECTION TO HEADER

PRODUCT REVISED as complying with the Florida Building Code Acceptance No. 08-0929.02 Expiration Date 07/15/12 By Miami Dade Product Control Division

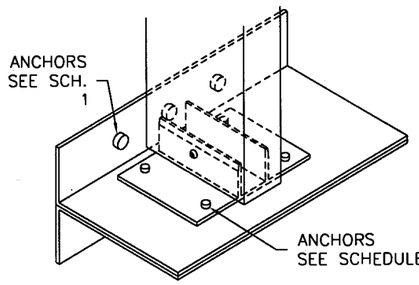


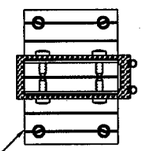

STORM BAR BRACKET
AS REQUIRED

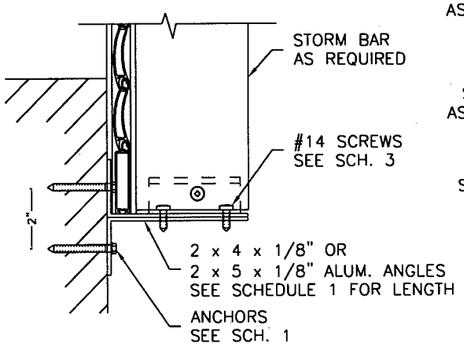


STORM BAR CONNECTION TO WALL (TOP & BOTTOM)

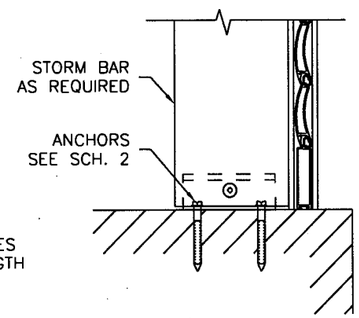


STORM BAR CONNECTION TO CEILING & FLOOR

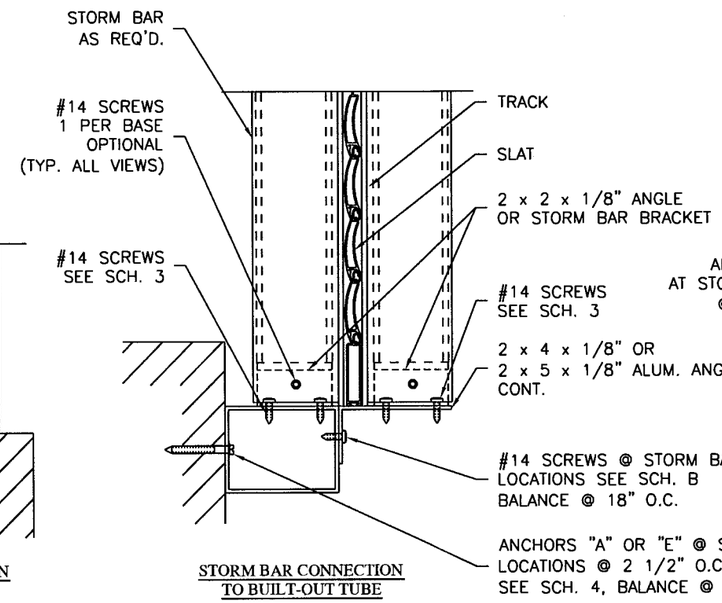


STORM BAR CONNECTION TO BUILT-OUT TUBE

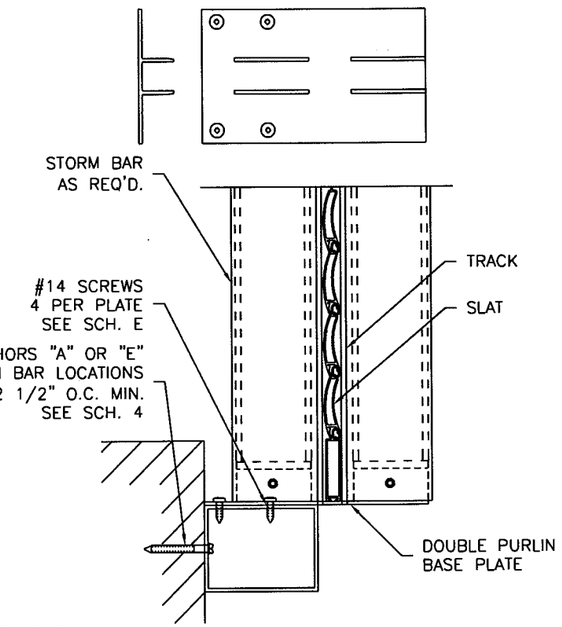


ALT. STORM BAR CONNECTION TO BUILT-OUT TUBE

SCHEDULE 1

| STORM BAR CONNECTION TO WALL | | | | |
|---|---|---|---|---|
| ALUM. ANGLE LENGTH IN. | NO. OF ANCHORS PER CONNECTION | ANCHOR TYPE | BASE MATERIAL | CONNECTION CAPACITY–lbs |
| 4 | 2 | A | CONC. | 773 |
| | | A | BLOCK | 352 |
| | | E | WOOD | 600 |
| 6 | 4 | A | CONC. | 1546 |
| | | A | BLOCK | 704 |
| | | E | WOOD | 1200 |
| 8 | 6 | A | CONC. | 2319 |
| | | A | BLOCK | 1056 |
| | | E | WOOD | 1800 |
| 10 | 8 | A | CONC. | 3092 |
| | | A | BLOCK | 1408 |
| | | E | WOOD | 2400 |
| 12 | 10 | A | CONC. | 3865 |
| | | A | BLOCK | 1760 |
| | | E | WOOD | 3000 |

SCHEDULE 2

| STORM BAR CONNECTION TO CEILING AND FLOOR | | | |
|---|---|---|---|
| ANCHOR PER SIDE | ANCHOR TYPE | BASE MATERIAL | CONNECTION CAPACITY–lbs |
| 1 | A | CONC. | 950 |
| | A | BLOCK | 796 |
| | E | WOOD | 616 |
| 2 | A | CONC. | 1520 |
| | A | BLOCK | 1274 |
| | E | WOOD | 1232 |
| 3 | N/A | – | – |
| | N/A | – | – |
| | E | WOOD | 1848 |
| 4 | N/A | – | – |
| | N/A | – | – |
| | E | WOOD | 2464 |
| 5 | N/A | – | – |
| | N/A | – | – |
| | E | WOOD | 3080 |

SCHEDULE B

| SINGLE CONNECTION TO TUBE AT STORM BAR LOCATION | |
|---|---|
| # OF SCREWS | CONNECTION CAPACITY–lbs |
| 2 | 400 |
| 3 | 600 |
| 4 | 800 |

SCHEDULE E

| BASE PLATE ANCHOR CAPACITY | |
|---|---|
| NO. OF SCREWS PER PLATE | CONNECTION CAPACITY–lbs |
| 4 | 2068 |

SCHEDULE 3

| STORM BAR BRACKET CONNECTION | | |
|---|---|---|
| STORM BAR SIZE | # OF SCREWS EACH LEG | CONNECTION CAPACITY–lbs |
| 3" BASE PLATE OR 4" BASE PLATE | 1 | 1034 |
| | 2 | 2068 |
| | 3 | 3102 |
| | 4 | 4136 |

SCHEDULE 4

| TUBE CONNECTION TO WALL @ STORM BAR LOCATION | | | |
|---|---|---|---|
| NO. OF ANCHOR | ANCHOR TYPE | BASE MATERIAL | CONNECTION CAPACITY–lbs |
| 2 | A | CONC. | 408 |
| | A | BLOCK | 220 |
| | E | WOOD | 300 |
| 3 | A | CONC. | 612 |
| | A | BLOCK | 330 |
| | E | WOOD | 450 |
| 4 | A | CONC. | 816 |
| | A | BLOCK | 440 |
| | E | WOOD | 600 |
| 5 | A | CONC. | 1020 |
| | A | BLOCK | 550 |
| | E | WOOD | 750 |

ROLL-A-WAY BY QMI
1661 GLENLAKE AVENUE
ITASCA, IL 60143
COPYRIGHT © 2008 QMI

DRAWING TITLE:
US60 DADE COUNTY
PRODUCT APPROVAL

D.L. Fowler
Professional Engineer
Florida License No.
PE0050458
11-4-08

| | |
|---|---|
| DRAWN: | P4 |
| DATE: | 3-26-02 |
| APPROVED: | DF |
| DATE: | 07-08-05 |
| DRAWING NO: | 3-01-024 |
| SIZE: B | REV: A |
| SCALE: | NTS |
| SHEET: | 8 OF 19 |

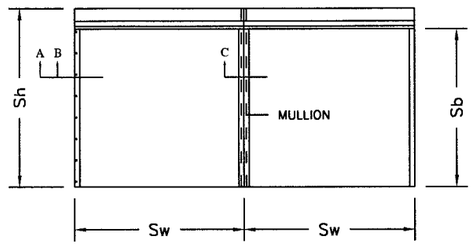


CENTER MULLION ANCHOR LOAD - NO STORM BAR
BOTTOM or TOP LOAD = (Sh x Sw x PSF x 0.0034722) = Lbs

CENTER MULLION ANCHOR LOAD - 2 SPAN
BOTTOM LOAD = (Sh x Sw x PSF x 0.001302) + (.15 x HL) = Lbs
TOP LOAD = (Sh x Sw x PSF x 0.001302) + (2 x HL) = Lbs

END MULLION ANCHOR LOAD - NO STORM BAR
BOTTOM or TOP LOAD = (Sh x Sw x PSF x 0.0017361)= Lbs

END MULLION ANCHOR LOAD - 2 SPAN
BOTTOM LOAD = (Sh x Sw x PSF x 0.000651) + (.15 x HL)= Lbs
TOP LOAD = (Sh x Sw x PSF X 0.000651) + HL = Lbs

HEADER CONNECTION LOAD - 2 SPAN (LEFT & RIGHT)
HL = (Sh x Sw x PSF x 0.001085) = Lbs

CENTER MULLION ANCHOR LOAD - 3 SPAN
BOTTOM LOAD = (Sh x Sw x PSF x 0.000926) + (.15 x HL3) = Lbs
TOP LOAD = (Sh x Sw x PSF x 0.000926) + (2 x HL3) = Lbs

END MULLION ANCHOR LOAD - 3 SPAN
BOTTOM LOAD = (Sh x Sw x PSF x 0.000463) + (.15 x HL3)= Lbs
TOP LOAD = (Sh x Sw x PSF X 0.000463) + HL3 = Lbs

HEADER CONNECTION LOAD - 3 SPAN (LEFT & RIGHT)
HL3 = (Sh x Sw x PSF x 0.0012731) = Lbs

IF ANY ANCHOR LOAD IS > SCHEDULE ANCHOR CAPACITY OF FASTENER SHOWN, AN ANCHORAGE SYSTEM SHALL BE DESIGNED ON A JOB BY JOB BASIS.

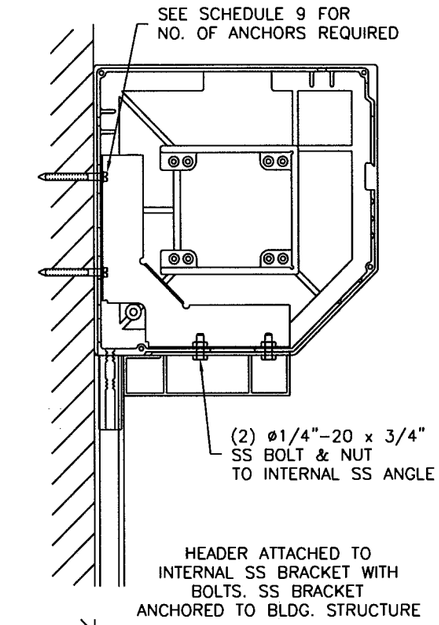


Ⓐ HEADER CONNECTION TO WALL
BRACKET ONLY (PLAN VIEW)
UNIT STRENGTH PER SCH. 9

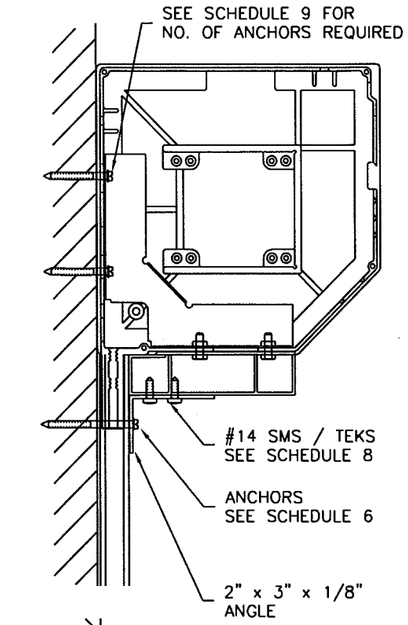


Ⓑ HEADER CONNECTION TO WALL
ANGLE & BRACKET (PLAN VIEW)
UNIT STRENGTH = SCH. 9 + SCH. 6

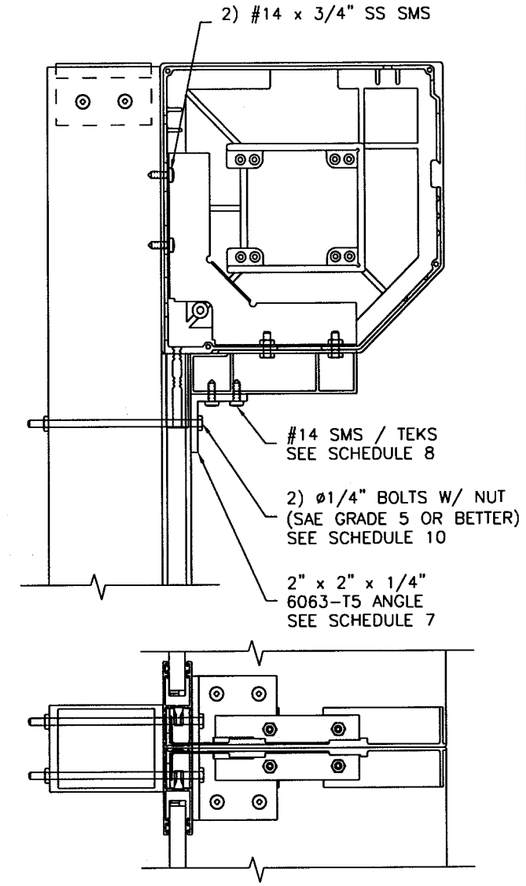


Ⓒ HEADER CONNECTION TO MULLION
(PLAN VIEW)
UNIT STRENGTH = SCH. 8 OR 10 + 600 LBS

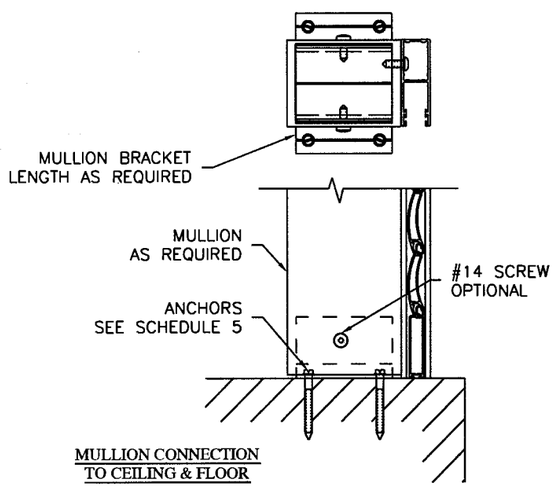


MULLION CONNECTION
TO CEILING & FLOOR

SCHEDULE 5

| MULLION CONNECTION TO CEILING AND FLOOR | | | |
|---|---|---|---|
| ANCHOR PER SIDE | ANCHOR TYPE | BASE MATERIAL | CONNECTION CAPACITY-lbs |
| 1 | A | CONC. | 950 |
| | A | BLOCK | 796 |
| | E | WOOD | 616 |
| | R | CONC. | 3200 |
| 2 | A | CONC. | 1520 |
| | A | BLOCK | 1274 |
| | E | WOOD | 1232 |
| 4 | A | CONC. | – |
| | A | BLOCK | – |
| | E | WOOD | 2464 |

SCHEDULE 6

| HEADER CONNECTION TO WALL | | | | |
|---|---|---|---|---|
| ALUM. ANGLE LENGTH IN. | NO. OF ANCHORS PER CONNECTION | ANCHOR TYPE | BASE MATERIAL | CONNECTION CAPACITY-lbs |
| 3 | 1 | A | CONC. | 483 |
| | | A | BLOCK | 218 |
| | | R | CONC. | 1115 |
| | 2 | E | WOOD | 456 |
| 6 | 4 | N/A | – | – |
| | | E | WOOD | 912 |
| 8 | 6 | E | WOOD | 1368 |

SCHEDULE 7

| ANGLE CONNECTION TO HEADER | | |
|---|---|---|
| NO. OF SCREWS | ANGLE LENGTH IN. | CONNECTION CAPACITY-lbs |
| 2 | 3 | 1187 |
| 3 | 4 | 1781 |
| 4 | 6 | 2374 |
| 6 | 8 | 3052 |

SCHEDULE 8

| ANGLE CONNECTION TO HEADER | | |
|---|---|---|
| NO. OF SCREWS | ANGLE LENGTH IN. | CONNECTION CAPACITY-lbs |
| 2 | 3 | 1640 |
| 4 | 4 | 3052 |

PRODUCT REVISED
as complying with the Florida
Building Code
Acceptance No. 08-0929.02
Expiration Date 07/15/12
By M Hard
Miami-Dade Product Control
Division

SCHEDULE 10

| ANGLE CONNECTION TO MULLION | | |
|---|---|---|
| NO. OF SCREWS | ANGLE LENGTH IN. | CONNECTION CAPACITY-lbs |
| 2 | 3 | 1187 |
| 3 | 4 | 1781 |
| 4 | 6 | 2374 |
| 6 | 8 | 3052 |

SCHEDULE 9

| HEADER/END CASTING CONNECTION TO WALL | | | |
|---|---|---|---|
| NO. OF ANCHORS | ANCHOR TYPE | BASE MATERIAL | CONNECTION CAPACITY-lbs |
| 1 | A | CONC. | 724 |
| | A | BLOCK | 327 |
| | E | WOOD | 300 |
| | R | CONC. | 1115 |
| 2 | A | CONC. | 966 |
| | A | BLOCK | 436 |
| | E | WOOD | 600 |
| 3 | A | CONC. | – |
| | A | BLOCK | – |
| | E | WOOD | 750 |

ROLL-A-WAY BY QMI
1661 GLENLAKE AVENUE
ITASCA, IL 60143
COPYRIGHT © 2008
QMI

DRAWING TITLE:
US60 DADE COUNTY
PRODUCT APPROVAL

D.L. Fowler
Professional Engineer
Florida License No.
PE0050458
11-4-08

| | |
|---|---|
| DRAWN: | DF |
| DATE: | 07-07-05 |
| APPROVED: | DF |
| DATE: | 07-08-05 |
| DRAWING NO: | 3-01-024 |
| SIZE: B | REV: A |
| SCALE: | 3/8" = 1'-0" |
| SHEET: | 9 OF 19 |

**ANCHOR CHARTS**
SLAT WIDTH PERFORMANCE LIMIT PER ANCHOR SPACING

| DESIGN LOADS, PSF | ANCHOR CHART 1 | | | ANCHOR CHART 2 | | | ANCHOR CHART 3 | | | ANCHOR CHART 4 | | | ANCHOR CHART 5 | |
|---|---|---|---|---|---|---|---|---|---|---|---|---|---|---|
| | 8" O.C. | 6" O.C. | 3" O.C. | 8" O.C. | 6" O.C. | 3" O.C. | 8" O.C. | 6" O.C. | 3" O.C. | 8" O.C. | 6" O.C. | 3" O.C. | 8" O.C. | 6" O.C. |
| 30 | 37 | 50 | 70 | 70 | 70 | 70 | 70 | 70 | 70 | 51 | 69 | 70 | 70 | 70 |
| 35 | 32 | 43 | 70 | 70 | 70 | 70 | 70 | 70 | 70 | 44 | 59 | 70 | 70 | 70 |
| 40 | 28 | 37 | 70 | 62 | 70 | 70 | 70 | 70 | 70 | 39 | 51 | 70 | 70 | 70 |
| 45 | 25 | 33 | 66 | 55 | 70 | 70 | 70 | 70 | 70 | 34 | 46 | 70 | 70 | 70 |
| 50 | 22 | 30 | 60 | 50 | 66 | 70 | 70 | 70 | 70 | 31 | 41 | 70 | 70 | 70 |
| 55 | 20 | 27 | 54 | 45 | 60 | 70 | 70 | 70 | 70 | 28 | 37 | 70 | 70 | 70 |
| 60 | N/A | 25 | 50 | 41 | 55 | 70 | 70 | 70 | 70 | 26 | 34 | 69 | 70 | 70 |
| 65 | N/A | 23 | 46 | 38 | 51 | 70 | 67 | 70 | 70 | 24 | 32 | 63 | 70 | 70 |
| 70 | N/A | 21 | 43 | 36 | 47 | 70 | 62 | 70 | 70 | 22 | 29 | 59 | 70 | 70 |
| 75 | N/A | N/A | 40 | 33 | 44 | 70 | 58 | 70 | 70 | 21 | 27 | 55 | 70 | 70 |
| 80 | N/A | N/A | 37 | 31 | 41 | 70 | 54 | 70 | 70 | N/A | 26 | 51 | 70 | 70 |
| 85 | N/A | N/A | 35 | 29 | 39 | 70 | 51 | 68 | 70 | N/A | 24 | 48 | 70 | 70 |
| 90 | N/A | N/A | 33 | 28 | 37 | 70 | 48 | 64 | 70 | N/A | 23 | 46 | 70 | 70 |
| 95 | N/A | N/A | 31 | 26 | 35 | 70 | 46 | 61 | 70 | N/A | 22 | 43 | 70 | 70 |
| 100 | N/A | N/A | 30 | 25 | 33 | 66 | 44 | 58 | 70 | N/A | 21 | 41 | 70 | 70 |
| 110 | N/A | N/A | 27 | 23 | 30 | 60 | 40 | 53 | 70 | N/A | N/A | 37 | 70 | 70 |
| 120 | N/A | N/A | 25 | 21 | 28 | 55 | 36 | 48 | 70 | N/A | N/A | 34 | 70 | 70 |
| 130 | N/A | N/A | 23 | N/A | 26 | 51 | 33 | 45 | 70 | N/A | N/A | 32 | 67 | 70 |
| 140 | N/A | N/A | 21 | N/A | 24 | 47 | 31 | 41 | 70 | N/A | N/A | 29 | 62 | 70 |
| 150 | N/A | N/A | N/A | N/A | 22 | 44 | 29 | 39 | 70 | N/A | N/A | 27 | 58 | 70 |
| 160 | N/A | N/A | N/A | N/A | 21 | 41 | 27 | 36 | 70 | N/A | N/A | 26 | 54 | 70 |
| 170 | N/A | N/A | N/A | N/A | N/A | 39 | 26 | 34 | 68 | N/A | N/A | 24 | 51 | 68 |
| 180 | N/A | N/A | N/A | N/A | N/A | 37 | 24 | 32 | 64 | N/A | N/A | 23 | 48 | 64 |
| 190 | N/A | N/A | N/A | N/A | N/A | 35 | 23 | 31 | 61 | N/A | N/A | 22 | 46 | 61 |
| 200 | N/A | N/A | N/A | N/A | N/A | 33 | 22 | 29 | 58 | N/A | N/A | 20 | 44 | 58 |
| 210 | N/A | N/A | N/A | N/A | N/A | 32 | 21 | 28 | 55 | N/A | N/A | N/A | 41 | 55 |
| 220 | N/A | N/A | N/A | N/A | N/A | 30 | 20 | 26 | 53 | N/A | N/A | N/A | 40 | 53 |

**SLAT WIDTH** = SHUTTER WIDTH/# OF SPANS

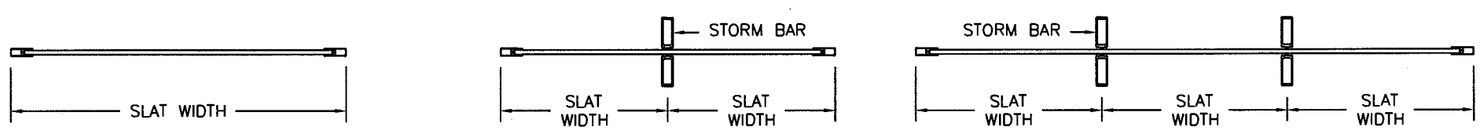


ONE SPAN — TWO SPANS — THREE SPANS

PRODUCT REVISED
as complying with the Florida Building Code
Acceptance No 08-092902
Expiration Date 07/15/12
By M Hach
Miami Dade Product Control Division

**TYPICAL ANCHORS**

ANCHOR TYPE "A" = 1/4"Ø TAPCON 1-3/4" EMBEDMENT TO CONCRETE
1-1/4" EMBEDMENT TO BLOCK

ANCHOR TYPE "E" = #14 SMS OR 1/4" Ø LAG SCREWS INTO WOOD. (SG = 0.47)
1-1/2" MIN. PENETRATION

ANCHOR TYPE "R" = 3/8" POWERS FASTENER - POWER BOLT
2" MIN. PENETRATION

NOTE: ANCHORS USE FULL EMBEDMENT IN CONCRETE BEYOND THE COVERING (STUCCO, TILES, ETC.). 2000 PSI CONCRETE MIN.

**FASTENER SPACING IN MASONRY**

CHARTS ARE BASED ON TYPICAL EDGE DISTANCE = 12d.
FOR LESSER EDGE DISTANCE DECREASE SPACING BY MULTIPLYING WITH THE FACTOR BELOW

| EDGE DIST. | 12d=3" | 10d=2-1/2" | 8d=2" | 6d=1-1/2" | 5d=1-1/4" |
|---|---|---|---|---|---|
| FACTOR | 1.00 | 0.86 | 0.71 | 0.57 | 0.50 |

EXAMPLE: FOR 3" EDGE DIST. SPACING = 12" O.C. (FROM CHART)
FOR 2" EDGE DIST. SPACING = 12 x .71 = 8.5" O.C.

TYPICAL EDGE DISTANCE IN WOOD CONSTRUCTION = 1 1/4"
NO REDUCTION ALLOWED


ROLL-A-WAY BY QMI
1661 GLENLAKE AVENUE
ITASCA, IL 60143


COPYRIGHT © 2008 QMI


DRAWING TITLE:
US60 DADE COUNTY
PRODUCT APPROVAL

D.L. Fowler
Professional Engineer
Florida License No.
PE0050458
11-4-08

| | |
|---|---|
| DRAWN: | DF |
| DATE: | 07-01-05 |
| APPROVED: | DF |
| DATE: | 07-08-05 |
| DRAWING NO: | 3-01-024 |
| SIZE: B | REV: A |
| SCALE: | 3/8" = 1'-0" |
| SHEET: | 10 OF 19 |

**MAXIMUM ALLOWABLE SHUTTER WIDTHS PER MULLION HEIGHT ***
2" x 3" CENTER MULLION, SINGLE SPANS

| DESIGN LOADS, PSF | 96" MULLION | 90" MULLION | 84" MULLION | 78" MULLION | 72" MULLION | 66" MULLION | 60" MULLION | 54" MULLION | 48" MULLION | 42" MULLION |
|---|---|---|---|---|---|---|---|---|---|---|
| 40 | 26 | 31 | 38 | 48 | 61 | 79 | 80 | 80 | 80 | 80 |
| 50 | 21 | 25 | 31 | 38 | 49 | 63 | 84 | 80 | 80 | 80 |
| 60 | 17 | 21 | 26 | 32 | 41 | 53 | 70 | 80 | 80 | 80 |
| 70 | 15 | 18 | 22 | 27 | 35 | 45 | 60 | 83 | 80 | 80 |
| 80 | 13 | 16 | 19 | 24 | 30 | 40 | 53 | 72 | 80 | 80 |
| 90 | 11 | 14 | 17 | 21 | 27 | 35 | 47 | 64 | 80 | 80 |
| 100 | 10 | 12 | 15 | 19 | 24 | 32 | 42 | 58 | 82 | 80 |
| 110 | 9 | 11 | 14 | 17 | 22 | 29 | 38 | 53 | 75 | 80 |
| 120 | 9 | 10 | 13 | 16 | 20 | 26 | 35 | 48 | 69 | 80 |
| 130 | 8 | 10 | 12 | 15 | 19 | 24 | 32 | 44 | 63 | 80 |
| 140 | 7 | 9 | 11 | 14 | 17 | 23 | 30 | 41 | 59 | 88 |
| 150 | 7 | 8 | 10 | 13 | 16 | 21 | 28 | 39 | 55 | 82 |
| 160 | 6 | 8 | 10 | 12 | 15 | 20 | 26 | 36 | 51 | 77 |
| 170 | 6 | 7 | 9 | 11 | 14 | 19 | 25 | 34 | 48 | 72 |
| 180 | 6 | 7 | 9 | 11 | 14 | 18 | 23 | 32 | 46 | 68 |
| 190 | 5 | 7 | 8 | 10 | 13 | 17 | 22 | 30 | 43 | 65 |
| 200 | 5 | 6 | 8 | 10 | 12 | 16 | 21 | 29 | 41 | 61 |
| 210 | 5 | 6 | 7 | 9 | 12 | 15 | 20 | 28 | 39 | 59 |
| 220 | 5 | 6 | 7 | 9 | 11 | 14 | 19 | 26 | 37 | 56 |

**MAXIMUM ALLOWABLE SHUTTER WIDTHS PER MULLION HEIGHT ***
2" x 3" CENTER MULLION, TWO SPANS

| DESIGN LOADS, PSF | 96" MULLION | 90" MULLION | 84" MULLION | 78" MULLION | 72" MULLION | 66" MULLION | 60" MULLION | 54" MULLION | 48" MULLION | 42" MULLION |
|---|---|---|---|---|---|---|---|---|---|---|
| 40 | 49 | 60 | 72 | 89 | 110 | 139 | 160 | 160 | 160 | 160 |
| 50 | 40 | 48 | 57 | 71 | 88 | 111 | 146 | 160 | 160 | 160 |
| 60 | 33 | 40 | 48 | 59 | 74 | 93 | 121 | 160 | 160 | 160 |
| 70 | 28 | 34 | 41 | 51 | 63 | 80 | 104 | 140 | 160 | 160 |
| 80 | 25 | 30 | 36 | 44 | 55 | 70 | 91 | 123 | 160 | 160 |
| 90 | 22 | 27 | 32 | 39 | 49 | 62 | 81 | 109 | 151 | 160 |
| 100 | 20 | 24 | 29 | 35 | 44 | 56 | 73 | 98 | 136 | 160 |
| 110 | 18 | 22 | 26 | 32 | 40 | 51 | 66 | 89 | 124 | 160 |
| 120 | 16 | 20 | 24 | 30 | 37 | 46 | 61 | 82 | 114 | 160 |
| 130 | 15 | 18 | 22 | 27 | 34 | 43 | 56 | 75 | 105 | 150 |
| 140 | 14 | 17 | 20 | 25 | 32 | 40 | 52 | 70 | 97 | 139 |
| 150 | 13 | 16 | 19 | 24 | 29 | 37 | 49 | 65 | 91 | 130 |
| 160 | 12 | 15 | 18 | 22 | 28 | 35 | 45 | 61 | 85 | 122 |
| 170 | 12 | 14 | 17 | 21 | 26 | 33 | 43 | 58 | 80 | 114 |
| 180 | 11 | 13 | 16 | 20 | 25 | 31 | 40 | 54 | 76 | 108 |
| 190 | 10 | 13 | 15 | 19 | 23 | 29 | 38 | 52 | 72 | 102 |
| 200 | 10 | 12 | 14 | 18 | 22 | 28 | 36 | 49 | 68 | 97 |
| 210 | 9 | 11 | 14 | 17 | 21 | 27 | 35 | 47 | 65 | 93 |
| 220 | 9 | 11 | 13 | 16 | 20 | 25 | 33 | 45 | 62 | 88 |


ROLL-A-WAY BY QMI
1661 GLENLAKE AVENUE
ITASCA, IL 60143


COPYRIGHT © 2008
QMI


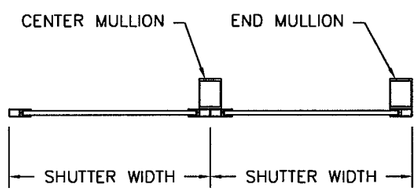


SINGLE SPANS

* MULLION PERFORMANCE CHARTS ONLY.
SEE PAGES 16 & 17 FOR (2 SPAN), SEE PAGE 1 (1 SPAN)
FOR ALLOWABLE SHUTTER SIZES.

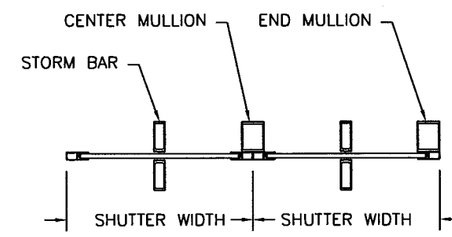


TWO SPANS

PRODUCT REVISED
as complying with the Florida Building Code
Acceptance No. 08-0929.02
Acceptance Date 07/14/12
By M Hach
Dade County Product Control Division

DRAWING TITLE:
US60 DADE COUNTY
PRODUCT APPROVAL

**MAXIMUM ALLOWABLE SHUTTER WIDTHS PER MULLION HEIGHT ***
2" x 3" END MULLION, SINGLE SPANS

| DESIGN LOADS, PSF | 102" MULLION | 96" MULLION | 90" MULLION | 84" MULLION | 78" MULLION | 72" MULLION | 66" MULLION | 60" MULLION | 54" MULLION | 48" MULLION |
|---|---|---|---|---|---|---|---|---|---|---|
| 40 | 43 | 51 | 62 | 70 | 70 | 70 | 70 | 70 | 70 | 70 |
| 50 | 34 | 41 | 50 | 61 | 70 | 70 | 70 | 70 | 70 | 70 |
| 60 | 29 | 34 | 42 | 51 | 64 | 70 | 70 | 70 | 70 | 70 |
| 70 | 25 | 29 | 36 | 44 | 55 | 70 | 70 | 70 | 70 | 70 |
| 80 | 21 | 26 | 31 | 38 | 48 | 61 | 70 | 70 | 70 | 70 |
| 90 | 19 | 23 | 28 | 34 | 43 | 54 | 70 | 70 | 70 | 70 |
| 100 | 17 | 21 | 25 | 31 | 38 | 49 | 63 | 70 | 70 | 70 |
| 110 | 16 | 19 | 23 | 28 | 35 | 44 | 58 | 70 | 70 | 70 |
| 120 | 14 | 17 | 21 | 26 | 32 | 41 | 53 | 70 | 70 | 70 |
| 130 | 13 | 16 | 19 | 24 | 30 | 38 | 49 | 65 | 70 | 70 |
| 140 | 12 | 15 | 18 | 22 | 27 | 35 | 45 | 60 | 70 | 70 |
| 150 | 11 | 14 | 17 | 20 | 26 | 33 | 42 | 56 | 70 | 70 |
| 160 | 11 | 13 | 16 | 19 | 24 | 30 | 40 | 53 | 70 | 70 |
| 170 | 10 | 12 | 15 | 18 | 23 | 29 | 37 | 50 | 68 | 70 |
| 180 | 10 | 11 | 14 | 17 | 21 | 27 | 35 | 47 | 64 | 70 |
| 190 | 9 | 11 | 13 | 16 | 20 | 26 | 33 | 44 | 61 | 70 |
| 200 | 9 | 10 | 12 | 15 | 19 | 24 | 32 | 42 | 58 | 70 |
| 210 | 8 | 10 | 12 | 15 | 18 | 23 | 30 | 40 | 55 | 70 |
| 220 | 8 | 9 | 11 | 14 | 17 | 22 | 29 | 38 | 53 | 70 |

**MAXIMUM ALLOWABLE SHUTTER WIDTHS PER MULLION HEIGHT ***
2" x 3" END MULLION, TWO SPANS

| DESIGN LOADS, PSF | 108" MULLION | 102" MULLION | 96" MULLION | 90" MULLION | 84" MULLION | 78" MULLION | 72" MULLION | 66" MULLION | 60" MULLION | 54" MULLION |
|---|---|---|---|---|---|---|---|---|---|---|
| 40 | 70 | 82 | 97 | 120 | 142 | 160 | 160 | 160 | 160 | 160 |
| 50 | 56 | 66 | 77 | 96 | 113 | 139 | 160 | 160 | 160 | 160 |
| 60 | 47 | 55 | 65 | 80 | 95 | 116 | 142 | 160 | 160 | 160 |
| 70 | 40 | 47 | 55 | 69 | 81 | 99 | 122 | 155 | 160 | 160 |
| 80 | 35 | 41 | 48 | 60 | 71 | 87 | 106 | 136 | 160 | 160 |
| 90 | 31 | 37 | 43 | 53 | 63 | 77 | 95 | 121 | 158 | 160 |
| 100 | 28 | 33 | 39 | 48 | 57 | 69 | 85 | 109 | 142 | 160 |
| 110 | 26 | 30 | 35 | 44 | 52 | 63 | 77 | 99 | 129 | 160 |
| 120 | 23 | 27 | 32 | 40 | 47 | 58 | 71 | 90 | 118 | 149 |
| 130 | 22 | 25 | 30 | 37 | 44 | 53 | 65 | 84 | 109 | 137 |
| 140 | 20 | 24 | 28 | 34 | 41 | 50 | 61 | 78 | 101 | 127 |
| 150 | 19 | 22 | 26 | 32 | 38 | 46 | 57 | 72 | 95 | 118 |
| 160 | 18 | 21 | 24 | 30 | 35 | 43 | 53 | 68 | 89 | 111 |
| 170 | 17 | 19 | 23 | 28 | 33 | 41 | 50 | 64 | 84 | 104 |
| 180 | 16 | 18 | 22 | 27 | 32 | 39 | 47 | 60 | 79 | 98 |
| 190 | 15 | 17 | 20 | 25 | 30 | 37 | 45 | 57 | 75 | 92 |
| 200 | 14 | 16 | 19 | 24 | 28 | 35 | 43 | 54 | 71 | 87 |
| 210 | 13 | 16 | 18 | 23 | 27 | 33 | 41 | 52 | 68 | 83 |
| 220 | 13 | 15 | 18 | 22 | 26 | 32 | 39 | 49 | 65 | 79 |


D.L. Fowler
Professional Engineer
Florida License No.
PE0050458

11-4-08

| | |
|---|---|
| DRAWN: | DJN |
| DATE: | 03-15-02 |
| APPROVED: | DF |
| DATE: | 07-08-05 |
| DRAWING NO: | 3-01-024 |
| SIZE: B | REV: A |
| SCALE: | 3/8" = 1'-0" |
| SHEET: | 11 OF 19 |

**MAXIMUM ALLOWABLE SHUTTER WIDTHS PER MULLION HEIGHT ***
2" x 3" CENTER MULLION, THREE SPANS

| DESIGN LOADS, PSF | 84" MULLION | 78" MULLION | 72" MULLION | 66" MULLION | 60" MULLION | 54" MULLION | 48" MULLION | 42" MULLION | 36" MULLION |
|---|---|---|---|---|---|---|---|---|---|
| 40 | 85 | 103 | 128 | 161 | 208 | 230 | 230 | 230 | 230 |
| 50 | 68 | 82 | 102 | 129 | 166 | 220 | 230 | 230 | 230 |
| 60 | 56 | 69 | 85 | 107 | 139 | 184 | 230 | 230 | 230 |
| 70 | 48 | 59 | 73 | 92 | 119 | 157 | 216 | 230 | 230 |
| 80 | 42 | 52 | 64 | 80 | 104 | 138 | 189 | 230 | 230 |
| 90 | 38 | 46 | 57 | 72 | 92 | 122 | 168 | 227 | 230 |
| 100 | 34 | 41 | 51 | 64 | 83 | 110 | 151 | 205 | 230 |
| 110 | 31 | 37 | 46 | 59 | 76 | 100 | 137 | 186 | 230 |
| 120 | 28 | 34 | 43 | 54 | 69 | 92 | 126 | 170 | 212 |
| 130 | 26 | 32 | 39 | 50 | 64 | 85 | 116 | 157 | 196 |
| 140 | 24 | 29 | 37 | 46 | 59 | 79 | 108 | 146 | 182 |
| 150 | 23 | 27 | 34 | 43 | 55 | 73 | 101 | 136 | 170 |
| 160 | 21 | 26 | 32 | 40 | 52 | 69 | 94 | 128 | 159 |
| 170 | 20 | 24 | 30 | 38 | 49 | 65 | 89 | 120 | 150 |
| 180 | 19 | 23 | 28 | 36 | 46 | 61 | 84 | 114 | 141 |
| 190 | 18 | 22 | 27 | 34 | 44 | 58 | 79 | 108 | 134 |
| 200 | 17 | 21 | 26 | 32 | 42 | 55 | 75 | 102 | 127 |
| 210 | 16 | 20 | 24 | 31 | 40 | 52 | 72 | 97 | 121 |
| 220 | 15 | 19 | 23 | 29 | 38 | 50 | 69 | 93 | 116 |

**MAXIMUM ALLOWABLE SHUTTER WIDTHS PER MULLION HEIGHT ***
3" x 4" CENTER MULLION, SINGLE SPANS

| DESIGN LOADS, PSF | 132" MULLION | 120" MULLION | 108" MULLION | 102" MULLION | 96" MULLION | 90" MULLION | 84" MULLION | 78" MULLION | 72" MULLION | 66" MULLION |
|---|---|---|---|---|---|---|---|---|---|---|
| 40 | 47 | 63 | 80 | 80 | 80 | 80 | 80 | 80 | 80 | 80 |
| 50 | 38 | 50 | 69 | 80 | 80 | 80 | 80 | 80 | 80 | 80 |
| 60 | 31 | 42 | 57 | 68 | 80 | 80 | 80 | 80 | 80 | 80 |
| 70 | 27 | 36 | 49 | 58 | 70 | 80 | 80 | 80 | 80 | 80 |
| 80 | 24 | 31 | 43 | 51 | 61 | 74 | 80 | 80 | 80 | 80 |
| 90 | 21 | 28 | 38 | 45 | 54 | 66 | 80 | 80 | 80 | 80 |
| 100 | 19 | 25 | 34 | 41 | 49 | 60 | 73 | 80 | 80 | 80 |
| 110 | 17 | 23 | 31 | 37 | 45 | 54 | 67 | 80 | 80 | 80 |
| 120 | 16 | 21 | 29 | 34 | 41 | 50 | 61 | 76 | 80 | 80 |
| 130 | 15 | 19 | 26 | 31 | 38 | 46 | 56 | 70 | 80 | 80 |
| 140 | 13 | 18 | 25 | 29 | 35 | 43 | 52 | 65 | 80 | 80 |
| 150 | 13 | 17 | 23 | 27 | 33 | 40 | 49 | 61 | 78 | 80 |
| 160 | 12 | 16 | 22 | 26 | 31 | 37 | 46 | 57 | 73 | 80 |
| 170 | 11 | 15 | 20 | 24 | 29 | 35 | 43 | 54 | 68 | 80 |
| 180 | 10 | 14 | 19 | 23 | 27 | 33 | 41 | 51 | 65 | 80 |
| 190 | 10 | 13 | 18 | 22 | 26 | 31 | 39 | 48 | 61 | 79 |
| 200 | 9 | 13 | 17 | 20 | 25 | 30 | 37 | 46 | 58 | 75 |
| 210 | 9 | 12 | 16 | 19 | 23 | 28 | 35 | 44 | 55 | 72 |
| 220 | 9 | 11 | 16 | 19 | 22 | 27 | 33 | 42 | 53 | 69 |

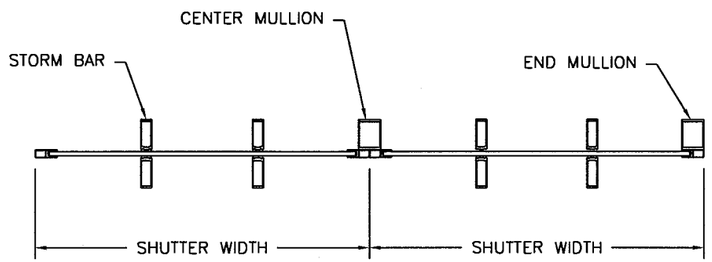


THREE SPANS

*MULLION PERFORMANCE CHARTS ONLY.
SEE PAGES 18 & 19 (3 SPAN), PAGE 1 (1 SPAN)
FOR ALLOWABLE SHUTTER SIZES.

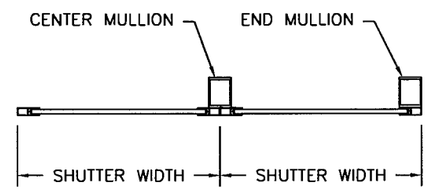


SINGLE SPANS

PRODUCT REVISED
as complying with the Florida
Building Code
Acceptance No. 08-0929.02
Expiration Date 07/15/12
By M Thakkar
Registered Professional Engineer
Florida

**MAXIMUM ALLOWABLE SHUTTER WIDTHS PER MULLION HEIGHT ***
2" x 3" END MULLION, THREE SPANS

| DESIGN LOADS, PSF | 102" MULLION | 96" MULLION | 90" MULLION | 84" MULLION | 78" MULLION | 72" MULLION | 66" MULLION | 60" MULLION | 54" MULLION | 48" MULLION |
|---|---|---|---|---|---|---|---|---|---|---|
| 40 | 100 | 119 | 141 | 168 | 207 | 230 | 230 | 230 | 230 | 230 |
| 50 | 80 | 95 | 113 | 135 | 166 | 204 | 230 | 230 | 230 | 230 |
| 60 | 67 | 79 | 94 | 112 | 138 | 170 | 213 | 230 | 230 | 230 |
| 70 | 57 | 68 | 81 | 96 | 119 | 146 | 182 | 230 | 230 | 230 |
| 80 | 50 | 59 | 71 | 84 | 104 | 128 | 159 | 208 | 230 | 230 |
| 90 | 45 | 53 | 63 | 75 | 92 | 114 | 142 | 185 | 230 | 230 |
| 100 | 40 | 48 | 57 | 67 | 83 | 102 | 128 | 166 | 220 | 230 |
| 110 | 36 | 43 | 51 | 61 | 75 | 93 | 116 | 151 | 200 | 230 |
| 120 | 33 | 40 | 47 | 56 | 69 | 85 | 106 | 139 | 184 | 230 |
| 130 | 31 | 37 | 44 | 52 | 64 | 79 | 98 | 128 | 170 | 229 |
| 140 | 29 | 34 | 40 | 48 | 59 | 73 | 91 | 119 | 157 | 212 |
| 150 | 27 | 32 | 38 | 45 | 55 | 68 | 85 | 111 | 147 | 198 |
| 160 | 25 | 30 | 35 | 42 | 52 | 64 | 80 | 104 | 138 | 186 |
| 170 | 24 | 28 | 33 | 40 | 49 | 60 | 75 | 98 | 130 | 175 |
| 180 | 22 | 26 | 31 | 37 | 46 | 57 | 71 | 92 | 122 | 165 |
| 190 | 21 | 25 | 30 | 35 | 44 | 54 | 67 | 88 | 116 | 156 |
| 200 | 20 | 24 | 28 | 34 | 41 | 51 | 64 | 83 | 110 | 149 |
| 210 | 19 | 23 | 27 | 32 | 40 | 49 | 61 | 79 | 105 | 141 |
| 220 | 18 | 22 | 26 | 31 | 38 | 46 | 58 | 76 | 100 | 135 |

**MAXIMUM ALLOWABLE SHUTTER WIDTHS PER MULLION HEIGHT ***
3" x 4" END MULLION, SINGLE SPANS

| DESIGN LOADS, PSF | 156" MULLION | 144" MULLION | 132" MULLION | 120" MULLION | 114" MULLION | 108" MULLION | 102" MULLION | 96" MULLION | 90" MULLION | 84" MULLION |
|---|---|---|---|---|---|---|---|---|---|---|
| 40 | 57 | 73 | 80 | 80 | 80 | 80 | 80 | 80 | 80 | 80 |
| 50 | 46 | 58 | 75 | 80 | 80 | 80 | 80 | 80 | 80 | 80 |
| 60 | 38 | 48 | 63 | 80 | 80 | 80 | 80 | 80 | 80 | 80 |
| 70 | 33 | 42 | 54 | 72 | 80 | 80 | 80 | 80 | 80 | 80 |
| 80 | 29 | 36 | 47 | 63 | 73 | 80 | 80 | 80 | 80 | 80 |
| 90 | 25 | 32 | 42 | 56 | 65 | 77 | 80 | 80 | 80 | 80 |
| 100 | 23 | 29 | 38 | 50 | 59 | 69 | 80 | 80 | 80 | 80 |
| 110 | 21 | 26 | 34 | 46 | 53 | 63 | 74 | 80 | 80 | 80 |
| 120 | 19 | 24 | 31 | 42 | 49 | 57 | 68 | 80 | 80 | 80 |
| 130 | 18 | 22 | 29 | 39 | 45 | 53 | 63 | 75 | 80 | 80 |
| 140 | 16 | 21 | 27 | 36 | 42 | 49 | 58 | 70 | 80 | 80 |
| 150 | 15 | 19 | 25 | 33 | 39 | 46 | 55 | 65 | 79 | 80 |
| 160 | 14 | 18 | 24 | 31 | 37 | 43 | 51 | 61 | 74 | 80 |
| 170 | 13 | 17 | 22 | 30 | 34 | 41 | 48 | 58 | 70 | 80 |
| 180 | 13 | 16 | 21 | 28 | 33 | 38 | 45 | 54 | 66 | 80 |
| 190 | 12 | 15 | 20 | 26 | 31 | 36 | 43 | 52 | 63 | 77 |
| 200 | 11 | 15 | 19 | 25 | 29 | 34 | 41 | 49 | 60 | 73 |
| 210 | 11 | 14 | 18 | 24 | 28 | 33 | 39 | 47 | 57 | 70 |
| 220 | 10 | 13 | 17 | 23 | 27 | 31 | 37 | 45 | 54 | 67 |


ROLL-A-WAY BY QMI
1661 GLENLAKE AVENUE
ITASCA, IL 60143


COPYRIGHT © 2008
QMI


DRAWING TITLE:
US60 DADE COUNTY
PRODUCT APPROVAL


D.L. Fowler
Professional Engineer
Florida License No.
PE0050458

11-4-08

| | |
|---|---|
| DRAWN: | DJN |
| DATE: | 03-15-02 |
| APPROVED: | DF |
| DATE: | 07-08-05 |
| DRAWING NO: | 3-01-024 |
| SIZE: B | REV: A |
| SCALE: | N/A |
| SHEET: | 12 OF 19 |

**MAXIMUM ALLOWABLE SHUTTER WIDTHS PER MULLION HEIGHT ***
3" x 4" CENTER MULLION, TWO SPANS

| DESIGN LOADS, PSF | 144" MULLION | 132" MULLION | 120" MULLION | 108" MULLION | 102" MULLION | 96" MULLION | 90" MULLION | 84" MULLION | 78" MULLION | 72" MULLION |
|---|---|---|---|---|---|---|---|---|---|---|
| 40 | 76 | 98 | 126 | 160 | 160 | 160 | 160 | 160 | 160 | 160 |
| 50 | 61 | 78 | 100 | 138 | 160 | 160 | 160 | 160 | 160 | 160 |
| 60 | 51 | 65 | 84 | 115 | 133 | 157 | 160 | 160 | 160 | 160 |
| 70 | 44 | 56 | 72 | 98 | 114 | 135 | 160 | 160 | 160 | 160 |
| 80 | 38 | 49 | 63 | 86 | 100 | 118 | 143 | 160 | 160 | 160 |
| 90 | 34 | 43 | 56 | 77 | 89 | 105 | 127 | 148 | 160 | 160 |
| 100 | 31 | 39 | 50 | 69 | 80 | 94 | 114 | 133 | 149 | 160 |
| 110 | 28 | 35 | 46 | 63 | 73 | 86 | 104 | 121 | 136 | 153 |
| 120 | 25 | 33 | 42 | 57 | 66 | 78 | 95 | 111 | 125 | 141 |
| 130 | 24 | 30 | 39 | 53 | 61 | 72 | 88 | 103 | 115 | 130 |
| 140 | 22 | 28 | 36 | 49 | 57 | 67 | 82 | 95 | 107 | 120 |
| 150 | 20 | 26 | 33 | 46 | 53 | 63 | 76 | 89 | 100 | 112 |
| 160 | 19 | 24 | 31 | 43 | 50 | 59 | 71 | 83 | 93 | 105 |
| 170 | 18 | 23 | 30 | 41 | 47 | 55 | 67 | 79 | 88 | 99 |
| 180 | 17 | 22 | 28 | 38 | 44 | 52 | 63 | 74 | 83 | 94 |
| 190 | 16 | 21 | 26 | 36 | 42 | 50 | 60 | 70 | 79 | 89 |
| 200 | 15 | 20 | 25 | 34 | 40 | 47 | 57 | 67 | 75 | 84 |
| 210 | 15 | 19 | 24 | 33 | 38 | 45 | 54 | 64 | 71 | 80 |
| 220 | 14 | 18 | 23 | 31 | 36 | 43 | 52 | 61 | 68 | 77 |

**MAXIMUM ALLOWABLE SHUTTER WIDTHS PER MULLION HEIGHT ***
3" x 4" CENTER MULLION, THREE SPANS

| DESIGN LOADS, PSF | 144" MULLION | 132" MULLION | 120" MULLION | 108" MULLION | 102" MULLION | 96" MULLION | 90" MULLION | 84" MULLION | 78" MULLION | 72" MULLION |
|---|---|---|---|---|---|---|---|---|---|---|
| 40 | 95 | 120 | 156 | 207 | 230 | 230 | 230 | 230 | 230 | 230 |
| 50 | 76 | 96 | 125 | 165 | 192 | 226 | 230 | 230 | 230 | 230 |
| 60 | 63 | 80 | 104 | 138 | 160 | 188 | 209 | 230 | 230 | 230 |
| 70 | 54 | 69 | 89 | 118 | 137 | 161 | 179 | 197 | 219 | 230 |
| 80 | 47 | 60 | 78 | 103 | 120 | 141 | 157 | 173 | 192 | 215 |
| 90 | 42 | 53 | 69 | 92 | 107 | 126 | 139 | 154 | 171 | 191 |
| 100 | 38 | 48 | 62 | 83 | 96 | 113 | 125 | 138 | 154 | 172 |
| 110 | 34 | 44 | 57 | 75 | 87 | 103 | 114 | 126 | 140 | 156 |
| 120 | 32 | 40 | 52 | 69 | 80 | 94 | 104 | 115 | 128 | 143 |
| 130 | 29 | 37 | 48 | 64 | 74 | 87 | 96 | 106 | 118 | 132 |
| 140 | 27 | 34 | 45 | 59 | 69 | 81 | 89 | 99 | 110 | 123 |
| 150 | 25 | 32 | 42 | 55 | 64 | 75 | 84 | 92 | 102 | 115 |
| 160 | 24 | 30 | 39 | 52 | 60 | 71 | 78 | 86 | 96 | 107 |
| 170 | 22 | 28 | 37 | 49 | 57 | 66 | 74 | 81 | 90 | 101 |
| 180 | 21 | 27 | 35 | 46 | 53 | 63 | 70 | 77 | 85 | 96 |
| 190 | 20 | 25 | 33 | 44 | 51 | 59 | 66 | 73 | 81 | 91 |
| 200 | 19 | 24 | 31 | 41 | 48 | 56 | 63 | 69 | 77 | 86 |
| 210 | 18 | 23 | 30 | 39 | 46 | 54 | 60 | 66 | 73 | 82 |
| 220 | 17 | 22 | 28 | 38 | 44 | 51 | 57 | 63 | 70 | 78 |

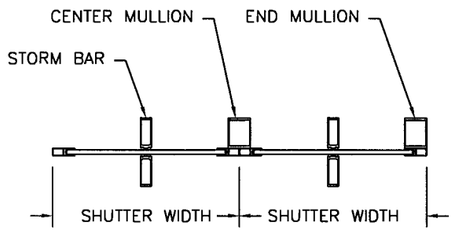


TWO SPANS

*MULLION PERFORMANCE CHARTS ONLY.
SEE PAGES 16 & 17 (2 SPAN), PAGES 18 & 19 (3 SPAN)
FOR ALLOWABLE SHUTTER SIZES.

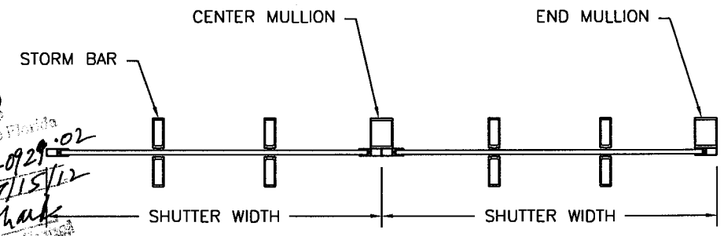


THREE SPANS

**MAXIMUM ALLOWABLE SHUTTER WIDTHS PER MULLION HEIGHT ***
3" x 4" END MULLION, TWO SPANS

| DESIGN LOADS, PSF | 180" MULLION | 168" MULLION | 156" MULLION | 144" MULLION | 132" MULLION | 120" MULLION | 114" MULLION | 108" MULLION | 102" MULLION | 96" MULLION |
|---|---|---|---|---|---|---|---|---|---|---|
| 40 | 82 | 99 | 121 | 152 | 160 | 160 | 160 | 160 | 160 | 160 |
| 50 | 66 | 79 | 97 | 122 | 156 | 160 | 160 | 160 | 160 | 160 |
| 60 | 55 | 66 | 81 | 102 | 130 | 160 | 160 | 160 | 160 | 160 |
| 70 | 47 | 57 | 69 | 87 | 112 | 144 | 160 | 160 | 160 | 160 |
| 80 | 41 | 49 | 61 | 76 | 98 | 126 | 146 | 160 | 160 | 160 |
| 90 | 36 | 44 | 54 | 68 | 87 | 112 | 130 | 151 | 160 | 160 |
| 100 | 33 | 40 | 49 | 61 | 78 | 100 | 117 | 136 | 159 | 160 |
| 110 | 30 | 36 | 44 | 55 | 71 | 91 | 107 | 124 | 144 | 160 |
| 120 | 27 | 33 | 40 | 51 | 65 | 84 | 98 | 113 | 132 | 153 |
| 130 | 25 | 30 | 37 | 47 | 60 | 77 | 90 | 105 | 122 | 141 |
| 140 | 23 | 28 | 35 | 44 | 56 | 72 | 84 | 97 | 114 | 131 |
| 150 | 22 | 26 | 32 | 41 | 52 | 67 | 78 | 91 | 106 | 122 |
| 160 | 20 | 25 | 30 | 38 | 49 | 63 | 73 | 85 | 99 | 114 |
| 170 | 19 | 23 | 29 | 36 | 46 | 59 | 69 | 80 | 93 | 107 |
| 180 | 18 | 22 | 27 | 34 | 43 | 56 | 65 | 76 | 88 | 100 |
| 190 | 17 | 21 | 26 | 32 | 41 | 53 | 62 | 72 | 84 | 95 |
| 200 | 16 | 20 | 24 | 30 | 39 | 50 | 59 | 68 | 79 | 90 |
| 210 | 16 | 19 | 23 | 29 | 37 | 48 | 56 | 65 | 76 | 85 |
| 220 | 15 | 18 | 22 | 28 | 35 | 46 | 53 | 62 | 72 | 81 |

**MAXIMUM ALLOWABLE SHUTTER WIDTHS PER MULLION HEIGHT ***
3" x 4" END MULLION, THREE SPANS

| DESIGN LOADS, PSF | 180" MULLION | 168" MULLION | 156" MULLION | 144" MULLION | 132" MULLION | 120" MULLION | 114" MULLION | 108" MULLION | 102" MULLION | 96" MULLION |
|---|---|---|---|---|---|---|---|---|---|---|
| 40 | 103 | 124 | 152 | 189 | 230 | 230 | 230 | 230 | 230 | 230 |
| 50 | 82 | 99 | 121 | 151 | 192 | 230 | 230 | 230 | 230 | 230 |
| 60 | 69 | 83 | 101 | 126 | 160 | 207 | 230 | 230 | 230 | 230 |
| 70 | 59 | 71 | 87 | 108 | 137 | 177 | 202 | 230 | 230 | 230 |
| 80 | 51 | 62 | 76 | 95 | 120 | 155 | 177 | 208 | 230 | 230 |
| 90 | 46 | 55 | 67 | 84 | 106 | 138 | 157 | 185 | 212 | 230 |
| 100 | 41 | 50 | 61 | 76 | 96 | 124 | 141 | 166 | 191 | 225 |
| 110 | 37 | 45 | 55 | 69 | 87 | 113 | 128 | 151 | 174 | 205 |
| 120 | 34 | 41 | 51 | 63 | 80 | 103 | 118 | 138 | 159 | 188 |
| 130 | 32 | 38 | 47 | 58 | 74 | 96 | 109 | 128 | 147 | 173 |
| 140 | 29 | 35 | 43 | 54 | 68 | 89 | 101 | 119 | 136 | 161 |
| 150 | 27 | 33 | 40 | 50 | 64 | 83 | 94 | 111 | 127 | 150 |
| 160 | 26 | 31 | 38 | 47 | 60 | 78 | 88 | 104 | 119 | 141 |
| 170 | 24 | 29 | 36 | 45 | 56 | 73 | 83 | 98 | 112 | 132 |
| 180 | 23 | 28 | 34 | 42 | 53 | 69 | 78 | 92 | 106 | 125 |
| 190 | 22 | 26 | 32 | 40 | 50 | 65 | 74 | 87 | 101 | 119 |
| 200 | 21 | 25 | 30 | 38 | 48 | 62 | 71 | 83 | 96 | 113 |
| 210 | 20 | 24 | 29 | 36 | 46 | 59 | 67 | 79 | 91 | 107 |
| 220 | 19 | 23 | 28 | 34 | 44 | 56 | 64 | 75 | 87 | 102 |


ROLL-A-WAY BY QMI
1661 GLENLAKE AVENUE
ITASCA, IL 60143


COPYRIGHT © 2008
QMI


DRAWING TITLE:
US60 DADE COUNTY
PRODUCT APPROVAL


D.L. Fowler
Professional Engineer
Florida License No.
PE0050458

11-4-08

| | |
|---|---|
| DRAWN: | DJN |
| DATE: | 03-15-02 |
| APPROVED: | DF |
| DATE: | 07-08-05 |
| DRAWING NO: | 3-01-024 |
| SIZE: B | REV: A |
| SCALE: | 3/8" = 1'-0" |
| SHEET: | 13 OF 19 |

**MAXIMUM ALLOWABLE SHUTTER WIDTHS PER MULLION HEIGHT ***
3" x 6" CENTER MULLION, SINGLE SPANS

| DESIGN LOADS, PSF | 168" MULLION | 156" MULLION | 144" MULLION | 132" MULLION | 120" MULLION | 108" MULLION | 102" MULLION | 96" MULLION | 90" MULLION | 84" MULLION |
|---|---|---|---|---|---|---|---|---|---|---|
| 40 | 52 | 65 | 80 | 80 | 80 | 80 | 80 | 80 | 80 | 80 |
| 50 | 42 | 52 | 66 | 80 | 80 | 80 | 80 | 80 | 80 | 80 |
| 60 | 35 | 43 | 55 | 71 | 80 | 80 | 80 | 80 | 80 | 80 |
| 70 | 30 | 37 | 47 | 61 | 80 | 80 | 80 | 80 | 80 | 80 |
| 80 | 26 | 32 | 41 | 54 | 71 | 80 | 80 | 80 | 80 | 80 |
| 90 | 23 | 29 | 37 | 48 | 63 | 80 | 80 | 80 | 80 | 80 |
| 100 | 21 | 26 | 33 | 43 | 57 | 78 | 80 | 80 | 80 | 80 |
| 110 | 19 | 24 | 30 | 39 | 52 | 71 | 80 | 80 | 80 | 80 |
| 120 | 17 | 22 | 27 | 36 | 47 | 65 | 77 | 80 | 80 | 80 |
| 130 | 16 | 20 | 25 | 33 | 44 | 60 | 71 | 80 | 80 | 80 |
| 140 | 15 | 19 | 24 | 31 | 41 | 56 | 66 | 80 | 80 | 80 |
| 150 | 14 | 17 | 22 | 29 | 38 | 52 | 62 | 74 | 80 | 80 |
| 160 | 13 | 16 | 21 | 27 | 36 | 49 | 58 | 70 | 80 | 80 |
| 170 | 12 | 15 | 19 | 25 | 34 | 46 | 55 | 65 | 79 | 80 |
| 180 | 12 | 14 | 18 | 24 | 32 | 43 | 52 | 62 | 75 | 80 |
| 190 | 11 | 14 | 17 | 23 | 30 | 41 | 49 | 59 | 71 | 80 |
| 200 | 10 | 13 | 16 | 21 | 28 | 39 | 46 | 56 | 68 | 80 |
| 210 | 10 | 12 | 16 | 20 | 27 | 37 | 44 | 53 | 64 | 79 |
| 220 | 9 | 12 | 15 | 19 | 26 | 36 | 42 | 51 | 61 | 76 |

**MAXIMUM ALLOWABLE SHUTTER WIDTHS PER MULLION HEIGHT ***
3" x 6" CENTER MULLION, TWO SPANS

| DESIGN LOADS, PSF | 228" MULLION | 216" MULLION | 204" MULLION | 192" MULLION | 180" MULLION | 168" MULLION | 156" MULLION | 144" MULLION | 132" MULLION | 120" MULLION |
|---|---|---|---|---|---|---|---|---|---|---|
| 40 | 47 | 55 | 65 | 77 | 93 | 112 | 138 | 160 | 160 | 160 |
| 50 | 38 | 44 | 52 | 61 | 74 | 90 | 111 | 139 | 160 | 160 |
| 60 | 31 | 37 | 43 | 51 | 62 | 75 | 92 | 116 | 136 | 156 |
| 70 | 27 | 32 | 37 | 44 | 53 | 64 | 79 | 99 | 116 | 134 |
| 80 | 24 | 28 | 32 | 38 | 46 | 56 | 69 | 87 | 102 | 117 |
| 90 | 21 | 25 | 29 | 34 | 41 | 50 | 61 | 77 | 90 | 104 |
| 100 | 19 | 22 | 26 | 31 | 37 | 45 | 55 | 69 | 81 | 94 |
| 110 | 17 | 20 | 24 | 28 | 34 | 41 | 50 | 63 | 74 | 85 |
| 120 | 16 | 18 | 22 | 26 | 31 | 37 | 46 | 58 | 68 | 78 |
| 130 | 14 | 17 | 20 | 24 | 28 | 35 | 43 | 53 | 63 | 72 |
| 140 | 13 | 16 | 19 | 22 | 26 | 32 | 40 | 50 | 58 | 67 |
| 150 | 13 | 15 | 17 | 20 | 25 | 30 | 37 | 46 | 54 | 62 |
| 160 | 12 | 14 | 16 | 19 | 23 | 28 | 35 | 43 | 51 | 59 |
| 170 | 11 | 13 | 15 | 18 | 22 | 26 | 33 | 41 | 48 | 55 |
| 180 | 10 | 12 | 14 | 17 | 21 | 25 | 31 | 39 | 45 | 52 |
| 190 | 10 | 12 | 14 | 16 | 19 | 24 | 29 | 37 | 43 | 49 |
| 200 | 9 | 11 | 13 | 15 | 19 | 22 | 28 | 35 | 41 | 47 |
| 210 | 9 | 11 | 12 | 15 | 18 | 21 | 26 | 33 | 39 | 45 |
| 220 | 9 | 10 | 12 | 14 | 17 | 20 | 25 | 32 | 37 | 43 |

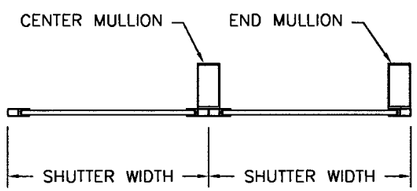


SINGLE SPANS

*MULLION PERFORMANCE CHARTS ONLY.
SEE PAGE 1(1SPAN) AND PAGES 16 & 17 (2 SPAN)
FOR ALLOWABLE SHUTTER SIZES.

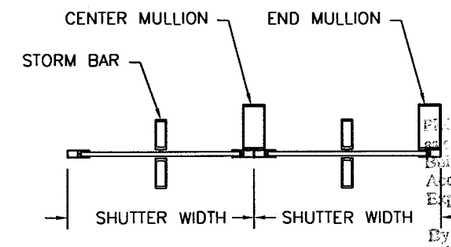


TWO SPANS

PRODUCT APPROVED
Complying with the Florida Building Code
Acceptance No. 08-0929.02
Expiration Date 07/15/12
By M Hall
Miami Dade Product Control Division

**MAXIMUM ALLOWABLE SHUTTER WIDTHS PER MULLION HEIGHT ***
3" x 6" END MULLION, SINGLE SPANS

| DESIGN LOADS, PSF | 216" MULLION | 204" MULLION | 192" MULLION | 180" MULLION | 168" MULLION | 156" MULLION | 144" MULLION | 132" MULLION | 120" MULLION | 108" MULLION |
|---|---|---|---|---|---|---|---|---|---|---|
| 40 | 49 | 58 | 69 | 80 | 80 | 80 | 80 | 80 | 80 | 80 |
| 50 | 39 | 46 | 55 | 67 | 80 | 80 | 80 | 80 | 80 | 80 |
| 60 | 32 | 38 | 46 | 56 | 69 | 80 | 80 | 80 | 80 | 80 |
| 70 | 28 | 33 | 40 | 48 | 59 | 74 | 80 | 80 | 80 | 80 |
| 80 | 24 | 29 | 35 | 42 | 52 | 64 | 80 | 80 | 80 | 80 |
| 90 | 22 | 26 | 31 | 37 | 46 | 57 | 73 | 80 | 80 | 80 |
| 100 | 19 | 23 | 28 | 34 | 41 | 52 | 66 | 80 | 80 | 80 |
| 110 | 18 | 21 | 25 | 31 | 38 | 47 | 60 | 77 | 80 | 80 |
| 120 | 16 | 19 | 23 | 28 | 34 | 43 | 55 | 71 | 80 | 80 |
| 130 | 15 | 18 | 21 | 26 | 32 | 40 | 50 | 66 | 80 | 80 |
| 140 | 14 | 16 | 20 | 24 | 30 | 37 | 47 | 61 | 80 | 80 |
| 150 | 13 | 15 | 18 | 22 | 28 | 34 | 44 | 57 | 76 | 80 |
| 160 | 12 | 14 | 17 | 21 | 26 | 32 | 41 | 53 | 71 | 80 |
| 170 | 11 | 14 | 16 | 20 | 24 | 30 | 39 | 50 | 67 | 80 |
| 180 | 11 | 13 | 15 | 19 | 23 | 29 | 36 | 47 | 63 | 80 |
| 190 | 10 | 12 | 15 | 18 | 22 | 27 | 35 | 45 | 60 | 80 |
| 200 | 10 | 12 | 14 | 17 | 21 | 26 | 33 | 43 | 57 | 78 |
| 210 | 9 | 11 | 13 | 16 | 20 | 25 | 31 | 41 | 54 | 74 |
| 220 | 9 | 10 | 13 | 15 | 19 | 23 | 30 | 39 | 52 | 71 |

**MAXIMUM ALLOWABLE SHUTTER WIDTHS PER MULLION HEIGHT ***
3" x 6" END MULLION, TWO SPANS

| DESIGN LOADS, PSF | 180" MULLION | 168" MULLION | 156" MULLION | 144" MULLION | 132" MULLION | 120" MULLION | 114" MULLION | 108" MULLION | 102" MULLION | 96" MULLION |
|---|---|---|---|---|---|---|---|---|---|---|
| 40 | 160 | 160 | 160 | 160 | 160 | 160 | 160 | 160 | 160 | 160 |
| 50 | 149 | 160 | 160 | 160 | 160 | 160 | 160 | 160 | 160 | 160 |
| 60 | 124 | 150 | 160 | 160 | 160 | 160 | 160 | 160 | 160 | 160 |
| 70 | 106 | 128 | 157 | 160 | 160 | 160 | 160 | 160 | 160 | 160 |
| 80 | 93 | 112 | 138 | 160 | 160 | 160 | 160 | 160 | 160 | 160 |
| 90 | 83 | 100 | 122 | 154 | 160 | 160 | 160 | 160 | 160 | 160 |
| 100 | 74 | 90 | 110 | 138 | 160 | 160 | 160 | 160 | 160 | 160 |
| 110 | 68 | 82 | 100 | 126 | 148 | 160 | 160 | 160 | 160 | 160 |
| 120 | 62 | 75 | 92 | 115 | 136 | 156 | 160 | 160 | 160 | 155 |
| 130 | 57 | 69 | 85 | 106 | 125 | 144 | 155 | 160 | 160 | 155 |
| 140 | 53 | 64 | 79 | 99 | 116 | 134 | 144 | 156 | 160 | 155 |
| 150 | 50 | 60 | 73 | 92 | 108 | 125 | 135 | 146 | 159 | 155 |
| 160 | 46 | 56 | 69 | 86 | 102 | 117 | 126 | 137 | 149 | 155 |
| 170 | 44 | 53 | 65 | 81 | 96 | 110 | 119 | 129 | 140 | 153 |
| 180 | 41 | 50 | 61 | 77 | 90 | 104 | 112 | 122 | 132 | 144 |
| 190 | 39 | 47 | 58 | 73 | 86 | 99 | 106 | 115 | 125 | 137 |
| 200 | 37 | 45 | 55 | 69 | 81 | 94 | 101 | 109 | 119 | 130 |
| 210 | 35 | 43 | 52 | 66 | 77 | 89 | 96 | 104 | 113 | 124 |
| 220 | 34 | 41 | 50 | 63 | 74 | 85 | 92 | 99 | 108 | 118 |


ROLL-A-WAY BY QMI
1661 GLENLAKE AVENUE
ITASCA, IL 60143


COPYRIGHT © 2008
QMI


DRAWING TITLE:
US60 DADE COUNTY
PRODUCT APPROVAL

D.L. Fowler
Professional Engineer
Florida License No.
PE0050458
11-4-08

| | |
|---|---|
| DRAWN: | DJN |
| DATE: | 03-15-02 |
| APPROVED: | DF |
| DATE: | 07-08-05 |
| DRAWING NO: | 3-01-024 |
| SIZE: B | REV: A |
| SCALE: | 3/8" = 1'-0" |
| SHEET: | 14 OF 19 |

**MAXIMUM ALLOWABLE SHUTTER WIDTHS PER MULLION HEIGHT ***
3" x 6" CENTER MULLION, THREE SPANS

| DESIGN LOADS, PSF | 180" MULLION | 168" MULLION | 156" MULLION | 144" MULLION | 132" MULLION | 120" MULLION | 114" MULLION | 108" MULLION | 102" MULLION | 96" MULLION |
|---|---|---|---|---|---|---|---|---|---|---|
| 40 | 117 | 141 | 167 | 186 | 210 | 230 | 230 | 230 | 230 | 230 |
| 50 | 93 | 113 | 133 | 149 | 168 | 192 | 206 | 222 | 230 | 230 |
| 60 | 78 | 94 | 111 | 124 | 140 | 160 | 171 | 185 | 200 | 217 |
| 70 | 67 | 81 | 95 | 106 | 120 | 137 | 147 | 158 | 171 | 186 |
| 80 | 58 | 71 | 83 | 93 | 105 | 120 | 129 | 138 | 150 | 162 |
| 90 | 52 | 63 | 74 | 83 | 93 | 107 | 114 | 123 | 133 | 144 |
| 100 | 47 | 57 | 67 | 75 | 84 | 96 | 103 | 111 | 120 | 130 |
| 110 | 42 | 51 | 61 | 68 | 76 | 87 | 94 | 101 | 109 | 118 |
| 120 | 39 | 47 | 56 | 62 | 70 | 80 | 86 | 92 | 100 | 108 |
| 130 | 36 | 43 | 51 | 57 | 65 | 74 | 79 | 85 | 92 | 100 |
| 140 | 33 | 40 | 48 | 53 | 60 | 69 | 73 | 79 | 86 | 93 |
| 150 | 31 | 38 | 44 | 50 | 56 | 64 | 69 | 74 | 80 | 87 |
| 160 | 29 | 35 | 42 | 47 | 53 | 60 | 64 | 69 | 75 | 81 |
| 170 | 27 | 33 | 39 | 44 | 49 | 56 | 61 | 65 | 70 | 76 |
| 180 | 26 | 31 | 37 | 41 | 47 | 53 | 57 | 62 | 67 | 72 |
| 190 | 25 | 30 | 35 | 39 | 44 | 50 | 54 | 58 | 63 | 68 |
| 200 | 23 | 28 | 33 | 37 | 42 | 48 | 51 | 55 | 60 | 65 |
| 210 | 22 | 27 | 32 | 35 | 40 | 46 | 49 | 53 | 57 | 62 |
| 220 | 21 | 26 | 30 | 34 | 38 | 44 | 47 | 50 | 54 | 59 |

*MULLION PERFORMANCE CHARTS ONLY.
SEE PAGES 18 & 19 FOR ALLOWABLE
3 SPAN SHUTTER SIZES.

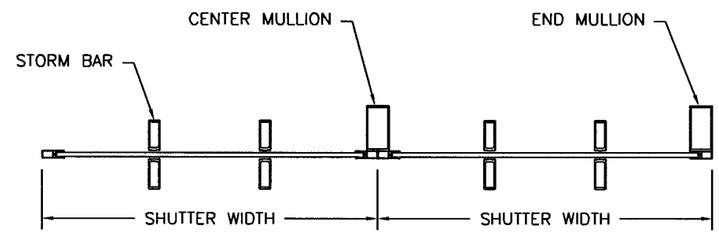


THREE SPANS

**MAXIMUM ALLOWABLE SHUTTER WIDTHS PER MULLION HEIGHT ***
3" x 6" END MULLION, THREE SPANS

| DESIGN LOADS, PSF | 228" MULLION | 216" MULLION | 204" MULLION | 192" MULLION | 180" MULLION | 168" MULLION | 156" MULLION | 144" MULLION | 132" MULLION | 120" MULLION |
|---|---|---|---|---|---|---|---|---|---|---|
| 40 | 121 | 141 | 165 | 194 | 230 | 230 | 230 | 230 | 230 | 230 |
| 50 | 97 | 113 | 132 | 155 | 187 | 226 | 230 | 230 | 230 | 230 |
| 60 | 81 | 94 | 110 | 129 | 156 | 188 | 222 | 230 | 230 | 230 |
| 70 | 69 | 81 | 94 | 111 | 133 | 162 | 190 | 213 | 230 | 230 |
| 80 | 60 | 70 | 82 | 97 | 117 | 141 | 167 | 186 | 210 | 230 |
| 90 | 54 | 63 | 73 | 86 | 104 | 126 | 148 | 166 | 187 | 213 |
| 100 | 48 | 56 | 66 | 78 | 93 | 113 | 133 | 149 | 168 | 192 |
| 110 | 44 | 51 | 60 | 71 | 85 | 103 | 121 | 135 | 153 | 174 |
| 120 | 40 | 47 | 55 | 65 | 78 | 94 | 111 | 124 | 140 | 160 |
| 130 | 37 | 43 | 51 | 60 | 72 | 87 | 102 | 115 | 129 | 148 |
| 140 | 35 | 40 | 47 | 55 | 67 | 81 | 95 | 106 | 120 | 137 |
| 150 | 32 | 38 | 44 | 52 | 62 | 75 | 89 | 99 | 112 | 128 |
| 160 | 30 | 35 | 41 | 49 | 58 | 71 | 83 | 93 | 105 | 120 |
| 170 | 28 | 33 | 39 | 46 | 55 | 67 | 78 | 88 | 99 | 113 |
| 180 | 27 | 31 | 37 | 43 | 52 | 63 | 74 | 83 | 93 | 107 |
| 190 | 25 | 30 | 35 | 41 | 49 | 60 | 70 | 78 | 89 | 101 |
| 200 | 24 | 28 | 33 | 39 | 47 | 57 | 67 | 75 | 84 | 96 |
| 210 | 23 | 27 | 31 | 37 | 44 | 54 | 63 | 71 | 80 | 91 |
| 220 | 22 | 26 | 30 | 35 | 42 | 51 | 61 | 68 | 76 | 87 |

PRODUCT REVISED
as complying with the Florida
Building Code
Acceptance No 08-0929.02
Expiration Date 02/15/12
By
Miami Dade Product Control
Division


ROLL-A-WAY BY QMI
1661 GLENLAKE AVENUE
ITASCA, IL 60143


COPYRIGHT © 2008
QMI


DRAWING TITLE:
US60 DADE COUNTY
PRODUCT APPROVAL

D.L. Fowler
Professional Engineer
Florida License No.
PE0050458
11-4-08

| | |
|---|---|
| DRAWN: | DJN |
| DATE: | 03-15-02 |
| APPROVED: | DF |
| DATE: | 07-08-05 |
| DRAWING NO: | 3-01-024 |
| SIZE: B | REV: A |
| SCALE: | 3/8" = 1'-0" |
| SHEET: | 15 OF 19 |

# APPLICATION CHARTS FOR TWO SPAN SHUTTERS (MAX. LIMITS)

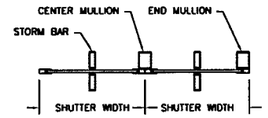

TWO SPANS

PRODUCT REVISED as complying with the Florida Building Code Acceptance No. 08-0929.02 Expiration Date 07/15/12
By Miami Dade Product Control Division

**HEADER #1, TWO SPANS**
MAXIMUM ALLOWABLE UNIT HEIGHTS, FOR GIVEN PRESSURE & UNIT WIDTH, PER TOTAL SYSTEM DEFLECTION LESS THAN 2"

| DESIGN PRESSURE PSF | 40" UNIT WIDTH | | | | 60" UNIT WIDTH | | | | 80" UNIT WIDTH | | | | 100" UNIT WIDTH | | | | 120" UNIT WIDTH | | | | 140" UNIT WIDTH | | | | 160" UNIT WIDTH | | | | 180" UNIT WIDTH | | | | MAXIMUM UNIT WIDTH |
|---|---|---|---|---|---|---|---|---|---|---|---|---|---|---|---|---|---|---|---|---|---|---|---|---|---|---|---|---|---|---|---|---|---|
| | SB #1 | SB #2 | SB #3 | SB #4 | SB #1 | SB #2 | SB #3 | SB #4 | SB #1 | SB #2 | SB #3 | SB #4 | SB #1 | SB #2 | SB #3 | SB #4 | SB #1 | SB #2 | SB #3 | SB #4 | SB #1 | SB #2 | SB #3 | SB #4 | SB #1 | SB #2 | SB #3 | SB #4 | SB #1 | SB #2 | SB #3 | SB #4 | |
| 30 | 136.7 | 159.2 | 192.4 | 215.2 | 115.5 | 140.9 | 170.2 | 190.2 | 98.7 | 128.3 | 154.4 | 172.2 | 87.5 | 116.9 | 129.5 | 129.5 | 79.5 | 88.7 | 88.7 | 88.7 | 64.5 | 64.5 | 64.5 | 64.5 | 49.0 | 49.0 | 49.0 | 49.0 | 38.4 | 38.4 | 38.4 | 38.4 | 190 |
| 35 | 131.5 | 153.2 | 185.0 | 207.0 | 106.9 | 135.5 | 163.3 | 182.8 | 91.3 | 123.1 | 147.9 | 165.2 | 81.1 | 111.1 | 111.1 | 111.1 | 73.5 | 76.1 | 76.1 | 76.1 | 55.3 | 55.3 | 55.3 | 55.2 | 42.0 | 42.0 | 42.0 | 42.0 | 33.1 | 33.1 | 33.1 | 33.1 | 182 |
| 40 | 126.1 | 148.1 | 179.0 | 200.2 | 100.1 | 130.9 | 158.0 | 176.6 | 85.5 | 118.7 | 142.7 | 155.0 | 75.7 | 97.1 | 97.1 | 97.1 | 66.5 | 66.5 | 66.5 | 66.5 | 48.4 | 48.4 | 48.4 | 48.4 | 36.7 | 36.7 | 36.7 | 36.7 | 28.9* | 28.9* | 28.9* | 28.9* | 177 |
| 45 | 118.9 | 143.7 | 173.8 | 194.4 | 94.3 | 126.9 | 153.4 | 171.4 | 80.5 | 112.3 | 137.7 | 137.7 | 71.5 | 86.3 | 86.3 | 86.3 | 59.1 | 59.1 | 59.1 | 59.1 | 43.0 | 43.0 | 43.0 | 43.0 | 32.7 | 32.7 | 32.7 | 32.7 | 25.7* | 25.7* | 25.7* | 25.7* | 172 |
| 50 | 112.7 | 139.9 | 169.2 | 189.2 | 89.5 | 123.5 | 149.1 | 166.6 | 76.5 | 106.5 | 123.9 | 123.9 | 67.7 | 77.7 | 77.7 | 77.7 | 53.3 | 53.3 | 53.3 | 53.2 | 38.6 | 38.6 | 38.6 | 38.6 | 29.5 | 29.5 | 29.5 | 29.5 | 23.1* | 23.1* | 23.1* | 23.1* | 166 |
| 55 | 107.5 | 136.7 | 165.2 | 184.8 | 85.3 | 118.9 | 145.5 | 162.6 | 72.9 | 101.5 | 112.7 | 112.7 | 64.7 | 70.7 | 70.7 | 70.7 | 48.3 | 48.2 | 48.2 | 48.2 | 35.1 | 35.1 | 35.1 | 35.1 | 26.7 | 26.7 | 26.7 | 26.7 | 20.9* | 20.9* | 20.9* | 20.9* | 161 |
| 60 | 102.9 | 133.7 | 161.6 | 180.8 | 81.7 | 113.9 | 142.1 | 159.0 | 69.7 | 97.1 | 103.3 | 103.3 | 61.9 | 64.7 | 64.7 | 64.7 | 44.2 | 44.2 | 44.2 | 44.2 | 32.3 | 32.3 | 32.3 | 32.3 | 24.5* | 24.5* | 24.5* | 24.5* | N/A | N/A | N/A | N/A | 156 |
| 70 | 95.3 | 128.5 | 155.4 | 173.8 | 75.5 | 105.3 | 131.9 | 152.6 | 64.5 | 88.5 | 88.5 | 88.5 | 55.5 | 55.5 | 55.5 | 55.5 | 37.9 | 37.9 | 37.9 | 37.9 | 27.7 | 27.7 | 27.7 | 27.7 | 20.9* | 20.9* | 20.9* | 20.9* | N/A | N/A | N/A | N/A | 147 |
| 80 | 89.1 | 124.3 | 150.2 | 168.2 | 70.7 | 98.5 | 123.3 | 142.5 | 60.3 | 77.5 | 77.5 | 77.5 | 48.5 | 48.5 | 48.4 | 48.4 | 33.3 | 33.3 | 33.3 | 33.3 | 24.1 | 24.1 | 24.1 | 24.1 | 18.3* | 18.3* | 18.3* | 18.3* | N/A | N/A | N/A | N/A | 143 |
| 90 | 84.1 | 117.1 | 145.7 | 163.2 | 66.7 | 92.9 | 116.3 | 126.5 | 56.9 | 68.7 | 68.7 | 68.7 | 43.1 | 43.0 | 43.0 | 43.0 | 29.5 | 29.5 | 29.5 | 29.5 | 21.5* | 21.5* | 21.5* | 21.5* | N/A | N/A | N/A | N/A | N/A | N/A | N/A | N/A | 137 |
| 100 | 79.7 | 111.1 | 139.1 | 158.8 | 63.3 | 88.1 | 110.3 | 113.9 | 53.9 | 61.9 | 61.9 | 61.9 | 38.8 | 38.8 | 38.8 | 38.8 | 26.5 | 26.5 | 26.5 | 26.5 | 19.3* | 19.3* | 19.3* | 19.3* | N/A | N/A | N/A | N/A | N/A | N/A | N/A | N/A | 133 |
| 110 | 75.9 | 105.9 | 132.5 | 155.0 | 60.3 | 84.1 | 103.5 | 103.5 | 51.5 | 56.3 | 56.3 | 56.3 | 35.3 | 35.3 | 35.3 | 35.3 | 24.1 | 24.1 | 24.1 | 24.1 | 17.5* | 17.5* | 17.5* | 17.5* | N/A | N/A | N/A | N/A | N/A | N/A | N/A | N/A | 127 |
| 120 | 72.7 | 101.5 | 126.9 | 151.6 | 57.7 | 80.5 | 94.9 | 94.9 | 49.3 | 51.5 | 51.5 | 51.5 | 32.3 | 32.3 | 32.3 | 32.3 | 22.1 | 22.1 | 22.1 | 22.1 | 16.1* | 16.1* | 16.1* | 16.1* | N/A | N/A | N/A | N/A | N/A | N/A | N/A | N/A | 124 |
| 130 | 69.9 | 97.5 | 121.9 | 148.5 | 55.5 | 77.3 | 87.7 | 87.7 | 47.3 | 47.5 | 47.5 | 47.5 | 29.9 | 29.9 | 29.9 | 29.9 | 20.5 | 20.5 | 20.5 | 20.5 | 14.9* | 14.9* | 14.9* | 14.9* | N/A | N/A | N/A | N/A | N/A | N/A | N/A | N/A | 122 |
| 140 | 67.3 | 93.9 | 117.5 | 145.7 | 53.5 | 74.5 | 81.3 | 81.3 | 44.1 | 44.1 | 44.1 | 44.0 | 27.7 | 27.7 | 27.7 | 27.7 | 18.9* | 18.9* | 18.9* | 18.9* | N/A | N/A | N/A | N/A | N/A | N/A | N/A | N/A | N/A | N/A | N/A | N/A | 117 |
| 150 | 65.1 | 90.7 | 113.5 | 143.3 | 51.7 | 71.9 | 75.9 | 75.9 | 41.3 | 41.3 | 41.2 | 41.2 | 25.9 | 25.9 | 25.9 | 25.9 | 17.7* | 17.7* | 17.7* | 17.7* | N/A | N/A | N/A | N/A | N/A | N/A | N/A | N/A | N/A | N/A | N/A | N/A | 114 |
| 160 | 62.9 | 87.9 | 109.9 | 140.5 | 49.9 | 69.7 | 71.1 | 71.1 | 38.7 | 38.6 | 38.6 | 38.6 | 24.3 | 24.3 | 24.3 | 24.3 | 16.5* | 16.5* | 16.5* | 16.5* | N/A | N/A | N/A | N/A | N/A | N/A | N/A | N/A | N/A | N/A | N/A | N/A | 111 |
| 170 | 61.1 | 85.1 | 106.7 | 136.3 | 48.5 | 66.9 | 66.9 | 66.9 | 36.4 | 36.3 | 36.3 | 36.3 | 22.7 | 22.7 | 22.7 | 22.7 | 15.5* | 15.5* | 15.5* | 15.5* | N/A | N/A | N/A | N/A | N/A | N/A | N/A | N/A | N/A | N/A | N/A | N/A | 107 |
| 180 | 59.3 | 82.7 | 103.7 | 132.5 | 47.1 | 63.3 | 63.3 | 63.3 | 34.3 | 34.3 | 34.3 | 34.3 | 21.5 | 21.5 | 21.5 | 21.5 | 14.7* | 14.7* | 14.7* | 14.7* | N/A | N/A | N/A | N/A | N/A | N/A | N/A | N/A | N/A | N/A | N/A | N/A | 105 |
| 190 | 57.9 | 80.5 | 100.9 | 128.9 | 45.9 | 59.9 | 59.9 | 59.9 | 32.5 | 32.5 | 32.5 | 32.5 | 20.3 | 20.3 | 20.3 | 20.3 | 13.9* | 13.9* | 13.9* | 13.9* | N/A | N/A | N/A | N/A | N/A | N/A | N/A | N/A | N/A | N/A | N/A | N/A | 102 |
| 200 | 56.3 | 78.5 | 98.3 | 125.7 | 44.7 | 56.9 | 56.9 | 56.9 | 30.9 | 30.9 | 30.9 | 30.9 | 19.3 | 19.3 | 19.3 | 19.3 | N/A | N/A | N/A | N/A | N/A | N/A | N/A | N/A | N/A | N/A | N/A | N/A | N/A | N/A | N/A | N/A | 100 |
| 210 | 54.9 | 76.7 | 95.9 | 122.7 | 43.7 | 54.1 | 54.1 | 54.1 | 29.5 | 29.5 | 29.5 | 29.5 | 18.5* | 18.5* | 18.5* | 18.5* | N/A | N/A | N/A | N/A | N/A | N/A | N/A | N/A | N/A | N/A | N/A | N/A | N/A | N/A | N/A | N/A | 97 |
| 220 | 53.7 | 74.9 | 93.7 | 119.9 | 42.5 | 51.7 | 51.7 | 51.7 | 28.1 | 28.1 | 28.1 | 28.1 | 17.5* | 17.5* | 17.5* | 17.5* | N/A | N/A | N/A | N/A | N/A | N/A | N/A | N/A | N/A | N/A | N/A | N/A | N/A | N/A | N/A | N/A | 95 |

**HEADER #2, TWO SPANS**
MAXIMUM ALLOWABLE UNIT HEIGHTS, FOR GIVEN PRESSURE & UNIT WIDTH, PER TOTAL SYSTEM DEFLECTION LESS THAN 2"

| DESIGN PRESSURE PSF | 40" UNIT WIDTH | | | | 60" UNIT WIDTH | | | | 80" UNIT WIDTH | | | | 100" UNIT WIDTH | | | | 120" UNIT WIDTH | | | | 140" UNIT WIDTH | | | | 160" UNIT WIDTH | | | | 180" UNIT WIDTH | | | | MAXIMUM UNIT WIDTH |
|---|---|---|---|---|---|---|---|---|---|---|---|---|---|---|---|---|---|---|---|---|---|---|---|---|---|---|---|---|---|---|---|---|---|
| | SB #1 | SB #2 | SB #3 | SB #4 | SB #1 | SB #2 | SB #3 | SB #4 | SB #1 | SB #2 | SB #3 | SB #4 | SB #1 | SB #2 | SB #3 | SB #4 | SB #1 | SB #2 | SB #3 | SB #4 | SB #1 | SB #2 | SB #3 | SB #4 | SB #1 | SB #2 | SB #3 | SB #4 | SB #1 | SB #2 | SB #3 | SB #4 | |
| 30 | 136.9 | 159.4 | 192.6 | 215.6 | 115.5 | 141.7 | 171.2 | 191.6 | 98.7 | 130.3 | 157.4 | 176.0 | 87.5 | 121.7 | 146.7 | 163.8 | 79.5 | 110.7 | 137.1 | 152.8 | 73.3 | 102.1 | 127.5 | 135.3 | 68.2 | 95.3 | 102.99 | 102.8 | 64.2 | 80.6 | 80.6 | 80.6 | 190 |
| 35 | 131.7 | 153.4 | 185.4 | 207.4 | 106.9 | 136.3 | 164.8 | 184.2 | 91.3 | 125.3 | 151.4 | 169.2 | 81.1 | 112.9 | 140.7 | 157.2 | 73.5 | 102.5 | 128.3 | 143.1 | 67.8 | 94.5 | 115.99 | 115.9 | 63.2 | 88.1 | 88.0 | 88.0 | 59.4 | 69.2 | 69.2 | 69.2 | 182 |
| 40 | 126.1 | 148.1 | 179.2 | 200.6 | 100.1 | 131.7 | 159.2 | 178.2 | 85.5 | 119.1 | 146.1 | 163.6 | 75.7 | 105.7 | 132.3 | 151.8 | 68.9 | 95.9 | 120.1 | 139.3 | 63.4 | 88.5 | 101.5 | 101.5 | 59.0 | 77.0 | 77.0 | 77.0 | 55.6* | 60.4* | 60.4* | 60.4* | 177 |
| 45 | 118.9 | 143.9 | 174.0 | 194.8 | 94.3 | 127.9 | 154.6 | 173.0 | 80.5 | 112.3 | 140.5 | 158.6 | 71.5 | 99.5 | 124.7 | 146.9 | 64.9 | 90.5 | 113.1 | 123.9 | 59.8 | 83.3 | 90.0 | 90.0 | 55.8 | 68.4 | 68.4 | 68.4 | 52.4* | 53.8* | 53.8* | 53.8* | 172 |
| 50 | 112.7 | 140.1 | 169.4 | 189.6 | 89.5 | 124.5 | 150.6 | 168.4 | 76.5 | 106.5 | 133.3 | 154.4 | 67.7 | 94.5 | 118.3 | 142.7 | 61.4 | 85.7 | 107.3 | 111.5 | 56.6 | 79.1 | 81.0 | 81.0 | 52.8 | 61.6 | 61.6 | 61.6 | 48.4* | 48.4* | 48.4* | 48.4* | 166 |
| 55 | 107.5 | 136.9 | 165.4 | 185.2 | 85.3 | 118.9 | 146.9 | 164.4 | 72.9 | 101.5 | 127.1 | 150.6 | 64.7 | 90.1 | 112.7 | 139.1 | 58.6 | 81.7 | 101.3 | 101.3 | 54.0 | 73.6 | 73.6 | 73.6 | 50.4 | 56.0 | 56.0 | 56.0 | 44.0* | 44.0* | 44.0* | 44.0* | 161 |
| 60 | 102.9 | 133.9 | 162.0 | 181.2 | 81.7 | 113.9 | 142.5 | 160.8 | 69.7 | 97.1 | 121.7 | 147.1 | 61.9 | 86.3 | 107.9 | 135.5 | 56.0 | 78.3 | 92.9 | 92.9 | 51.8 | 67.4 | 67.4 | 67.4 | 48.2* | 51.2* | 51.2* | 51.2* | N/A | N/A | N/A | N/A | 156 |
| 70 | 95.3 | 128.7 | 155.8 | 174.4 | 75.5 | 105.3 | 131.9 | 154.6 | 64.5 | 89.9 | 112.7 | 141.3 | 57.3 | 79.9 | 99.9 | 116.3 | 51.8 | 72.5 | 79.6 | 79.6 | 47.8 | 57.8 | 57.8 | 57.8 | 44.0* | 44.0* | 44.0* | 44.0* | N/A | N/A | N/A | N/A | 147 |
| 80 | 89.1 | 124.3 | 150.6 | 168.6 | 70.7 | 98.5 | 123.3 | 149.3 | 60.3 | 84.1 | 105.3 | 134.7 | 53.4 | 74.7 | 93.5 | 101.7 | 48.6 | 67.6 | 69.6 | 69.6 | 44.8 | 50.6 | 50.6 | 50.6 | 38.4* | 38.4* | 38.4* | 38.4* | N/A | N/A | N/A | N/A | 143 |
| 90 | 84.1 | 117.1 | 146.1 | 163.6 | 66.7 | 92.9 | 116.3 | 144.9 | 56.9 | 79.3 | 99.3 | 127.1 | 50.4 | 70.3 | 88.1 | 90.3 | 45.8 | 61.8 | 61.8 | 61.8 | 42.2* | 45.0* | 45.0* | 45.0* | N/A | N/A | N/A | N/A | N/A | N/A | N/A | N/A | 137 |
| 100 | 79.7 | 111.1 | 139.1 | 159.4 | 63.3 | 88.1 | 110.3 | 141.1 | 53.9 | 75.3 | 94.3 | 120.5 | 47.8 | 66.7 | 81.3 | 81.3 | 43.4 | 55.6 | 55.6 | 55.6 | 40.0* | 40.4* | 40.4* | 40.4* | N/A | N/A | N/A | N/A | N/A | N/A | N/A | N/A | 133 |
| 110 | 75.9 | 105.9 | 132.5 | 155.6 | 60.3 | 84.1 | 105.1 | 134.5 | 51.5 | 71.7 | 89.9 | 114.9 | 45.6 | 63.7 | 73.9 | 73.8 | 41.4 | 50.6 | 50.6 | 50.6 | 36.9* | 36.9* | 36.9* | 36.9* | N/A | N/A | N/A | N/A | N/A | N/A | N/A | N/A | 127 |
| 120 | 72.7 | 101.5 | 126.9 | 152.2 | 57.7 | 80.5 | 100.7 | 128.7 | 49.3 | 68.7 | 86.1 | 108.1 | 43.6 | 60.8 | 67.6 | 67.6 | 39.6 | 46.2 | 46.2 | 46.2 | 33.7* | 33.7* | 33.7* | 33.7* | N/A | N/A | N/A | N/A | N/A | N/A | N/A | N/A | 124 |
| 130 | 69.9 | 97.5 | 121.9 | 149.1 | 55.5 | 77.3 | 96.7 | 123.7 | 47.3 | 66.1 | 82.7 | 99.7 | 41.8 | 58.4 | 62.4 | 62.4 | 38.0 | 42.8 | 42.8 | 42.8 | 31.1* | 31.1* | 31.1* | 31.1* | N/A | N/A | N/A | N/A | N/A | N/A | N/A | N/A | 122 |
| 140 | 67.3 | 93.9 | 117.5 | 146.3 | 53.5 | 74.5 | 93.3 | 119.3 | 45.7 | 63.5 | 79.7 | 92.5 | 40.4 | 56.4 | 58.0 | 58.0 | 36.7* | 39.6* | 39.6* | 39.6* | N/A | N/A | N/A | N/A | N/A | N/A | N/A | N/A | N/A | N/A | N/A | N/A | 117 |
| 150 | 65.1 | 90.7 | 113.5 | 143.9 | 51.7 | 71.9 | 90.1 | 115.1 | 44.0 | 61.5 | 76.9 | 86.5 | 39.0 | 54.0 | 54.0 | 54.0 | 35.5* | 37.1* | 37.1* | 37.1* | N/A | N/A | N/A | N/A | N/A | N/A | N/A | N/A | N/A | N/A | N/A | N/A | 114 |
| 160 | 62.9 | 87.9 | 109.9 | 140.5 | 49.9 | 69.7 | 87.3 | 111.5 | 42.6 | 59.5 | 74.5 | 81.1 | 37.9 | 50.6 | 50.6 | 50.6 | 34.3* | 34.7* | 34.7* | 34.7* | N/A | N/A | N/A | N/A | N/A | N/A | N/A | N/A | N/A | N/A | N/A | N/A | 111 |
| 170 | 61.1 | 85.1 | 106.7 | 136.3 | 48.5 | 67.5 | 84.5 | 108.1 | 41.2 | 57.7 | 72.3 | 76.3 | 36.7 | 47.6 | 47.6 | 47.6 | 32.7* | 32.7* | 32.7* | 32.7* | N/A | N/A | N/A | N/A | N/A | N/A | N/A | N/A | N/A | N/A | N/A | N/A | 107 |
| 180 | 59.3 | 82.7 | 103.7 | 132.5 | 47.1 | 65.7 | 82.3 | 105.1 | 40.2 | 56.1 | 70.3 | 71.9 | 35.7 | 45.0 | 45.0 | 45.0 | 30.9* | 30.9* | 30.9* | 30.9* | N/A | N/A | N/A | N/A | N/A | N/A | N/A | N/A | N/A | N/A | N/A | N/A | 105 |
| 190 | 57.9 | 80.5 | 100.9 | 128.9 | 45.9 | 63.9 | 80.1 | 102.3 | 39.0 | 54.5 | 68.1 | 68.0 | 34.7 | 42.6 | 42.6 | 42.6 | 29.3* | 29.3* | 29.3* | 29.3* | N/A | N/A | N/A | N/A | N/A | N/A | N/A | N/A | N/A | N/A | N/A | N/A | 102 |
| 200 | 56.3 | 78.5 | 98.3 | 125.7 | 44.7 | 62.3 | 77.9 | 99.7 | 38.0 | 53.1 | 64.7 | 64.6 | 33.9 | 40.6 | 40.6 | 40.6 | N/A | N/A | N/A | N/A | N/A | N/A | N/A | N/A | N/A | N/A | N/A | N/A | N/A | N/A | N/A | N/A | 100 |
| 210 | 54.9 | 76.7 | 95.9 | 122.7 | 43.7 | 60.7 | 76.1 | 97.3 | 37.3 | 51.8 | 61.6 | 61.6 | 33.1* | 38.6* | 38.6* | 38.6* | N/A | N/A | N/A | N/A | N/A | N/A | N/A | N/A | N/A | N/A | N/A | N/A | N/A | N/A | N/A | N/A | 97 |
| 220 | 53.7 | 74.9 | 93.7 | 119.9 | 42.5 | 59.3 | 74.3 | 95.1 | 36.3 | 50.6 | 58.8 | 58.8 | 32.3* | 36.9* | 36.9* | 36.9* | N/A | N/A | N/A | N/A | N/A | N/A | N/A | N/A | N/A | N/A | N/A | N/A | N/A | N/A | N/A | N/A | 95 |

* FOR INTERPOLATION ONLY (MAXIMUM WIDTH GOVERNS)

NOTES: "SB" = STORM BAR, SB #1 = 3", SB #2 = 3" WITH INSERT, SB #3 = 4", & SB #4 = 4" WITH INSERT


ROLL-A-WAY BY QMI
1661 GLENLAKE AVENUE
ITASCA, IL 60143


COPYRIGHT © 2008 QMI


DRAWING TITLE:
US60 DADE COUNTY
PRODUCT APPROVAL


D.L. Fowler
Professional Engineer
Florida License No.
PE0050458

11-4-08

| | |
|---|---|
| DRAWN: | DJN |
| DATE: | 03-15-02 |
| APPROVED: | DF |
| DATE: | 07-08-05 |
| DRAWING NO: | 3-01-024 |
| SIZE: B | REV: A |
| SCALE: | 3/8" = 1'-0" |
| SHEET: | 16 OF 19 |

# APPLICATION CHART FOR TWO SPAN SHUTTERS (MAX. LIMITS)

**HEADER #3, TWO SPANS**

MAXIMUM ALLOWABLE UNIT HEIGHTS, FOR GIVEN PRESSURE & UNIT WIDTH, PER TOTAL SYSTEM DEFLECTION LESS THAN 2"

| DESIGN PRESSURE PSF | 40" UNIT WIDTH | | | | 60" UNIT WIDTH | | | | 80" UNIT WIDTH | | | | 100" UNIT WIDTH | | | | 120" UNIT WIDTH | | | | 140" UNIT WIDTH | | | | 160" UNIT WIDTH | | | | 180" UNIT WIDTH | | | | MAXIMUM UNIT WIDTH |
|---|---|---|---|---|---|---|---|---|---|---|---|---|---|---|---|---|---|---|---|---|---|---|---|---|---|---|---|---|---|---|---|---|---|
| | SB #1 | SB #2 | SB #3 | SB #4 | SB #1 | SB #2 | SB #3 | SB #4 | SB #1 | SB #2 | SB #3 | SB #4 | SB #1 | SB #2 | SB #3 | SB #4 | SB #1 | SB #2 | SB #3 | SB #4 | SB #1 | SB #2 | SB #3 | SB #4 | SB #1 | SB #2 | SB #3 | SB #4 | SB #1 | SB #2 | SB #3 | SB #4 | |
| 30 | 136.9 | 159.4 | 192.6 | 215.6 | 115.5 | 141.7 | 171.6 | 192.0 | 98.7 | 130.9 | 158.2 | 177.0 | 87.5 | 121.9 | 148.3 | 165.8 | 79.5 | 110.7 | 138.7 | 156.8 | 73.2 | 102.1 | 127.9 | 148.3 | 68.2 | 95.3 | 119.3 | 140.1 | 64.2 | 89.6 | 112.2 | 131.7 | 190 |
| 35 | 131.7 | 153.4 | 185.4 | 207.4 | 106.9 | 136.5 | 165.0 | 184.6 | 91.3 | 125.9 | 152.2 | 170.2 | 81.1 | 112.9 | 141.3 | 159.4 | 73.5 | 102.5 | 128.3 | 150.4 | 67.8 | 94.5 | 118.3 | 142.1 | 63.2 | 88.2 | 110.4 | 133.9 | 59.4 | 82.8 | 103.8 | 125.3 | 182 |
| 40 | 126.1 | 148.3 | 179.4 | 200.6 | 100.1 | 131.9 | 159.6 | 178.6 | 85.5 | 119.1 | 146.9 | 164.6 | 75.7 | 105.7 | 132.3 | 154.0 | 68.9 | 95.9 | 120.1 | 145.1 | 63.4 | 88.5 | 110.7 | 136.9 | 59.0 | 82.4 | 103.2 | 128.7 | 55.6* | 77.6* | 97.0* | 118.6* | 177 |
| 45 | 118.9 | 143.9 | 174.2 | 194.8 | 94.3 | 128.1 | 155.0 | 173.4 | 80.5 | 112.3 | 140.5 | 159.6 | 71.5 | 99.5 | 124.7 | 149.3 | 64.8 | 90.5 | 113.1 | 140.7 | 59.8 | 83.2 | 104.5 | 132.5 | 55.8 | 77.6 | 97.2 | 124.1 | 52.4* | 73.0* | 91.6* | 105.4* | 172 |
| 50 | 112.7 | 140.1 | 169.6 | 189.8 | 89.5 | 124.7 | 150.8 | 168.8 | 76.5 | 106.5 | 133.3 | 155.4 | 67.7 | 94.5 | 118.3 | 145.3 | 61.4 | 85.7 | 107.3 | 136.7 | 56.6 | 79.0 | 99.0 | 126.7 | 52.8 | 73.6 | 92.2 | 118.0 | 49.6* | 69.4* | 86.8* | 94.8* | 166 |
| 55 | 107.5 | 136.9 | 165.6 | 185.2 | 85.3 | 118.9 | 147.3 | 164.8 | 72.9 | 101.5 | 127.1 | 151.8 | 64.7 | 90.1 | 112.7 | 141.7 | 58.6 | 81.7 | 102.3 | 130.9 | 54.0 | 75.4 | 94.4 | 120.7 | 50.4 | 70.2 | 88.0 | 109.6 | 47.4* | 66.0* | 82.8* | 86.2* | 161 |
| 60 | 102.9 | 133.9 | 162.0 | 181.4 | 81.7 | 113.9 | 142.5 | 161.2 | 69.7 | 97.1 | 121.7 | 148.3 | 61.9 | 86.3 | 107.9 | 138.1 | 56.0 | 78.3 | 98.1 | 125.3 | 51.8 | 72.2 | 90.4 | 115.5 | 48.2* | 67.2* | 84.2* | 100.4* | N/A | N/A | N/A | N/A | 156 |
| 70 | 95.3 | 128.9 | 155.8 | 174.4 | 75.5 | 105.3 | 131.9 | 155.2 | 64.5 | 89.9 | 112.7 | 142.7 | 57.3 | 79.9 | 99.9 | 127.7 | 51.8 | 72.4 | 90.7 | 116.1 | 47.8 | 66.8 | 83.6 | 107.0 | 44.6* | 62.2* | 78.0* | 86.2* | N/A | N/A | N/A | N/A | 147 |
| 80 | 89.1 | 124.3 | 150.8 | 168.8 | 70.7 | 98.5 | 123.3 | 150.0 | 60.3 | 84.1 | 105.3 | 134.7 | 53.4 | 74.7 | 93.5 | 119.5 | 48.6 | 67.6 | 84.8 | 108.5 | 44.8 | 62.4 | 78.2 | 99.2 | 41.8* | 58.2* | 73.0* | 75.4* | N/A | N/A | N/A | N/A | 143 |
| 90 | 84.1 | 117.1 | 146.3 | 163.8 | 66.7 | 92.9 | 116.3 | 145.5 | 56.9 | 79.3 | 99.3 | 127.1 | 50.4 | 70.3 | 88.1 | 112.7 | 45.8 | 63.8 | 80.0 | 102.3 | 42.2* | 58.8* | 73.6* | 88.0* | N/A | N/A | N/A | N/A | N/A | N/A | N/A | N/A | 137 |
| 100 | 79.7 | 111.1 | 139.1 | 159.6 | 63.3 | 88.1 | 110.3 | 141.1 | 53.9 | 75.3 | 94.3 | 120.5 | 47.8 | 66.7 | 83.5 | 106.9 | 43.4 | 60.6 | 75.8 | 97.0 | 40.0* | 55.8* | 70.0* | 79.2* | N/A | N/A | N/A | N/A | N/A | N/A | N/A | N/A | 133 |
| 110 | 75.9 | 105.9 | 132.5 | 155.8 | 60.3 | 84.1 | 105.1 | 134.5 | 51.5 | 71.7 | 89.9 | 114.9 | 45.6 | 63.6 | 79.7 | 101.9 | 41.4 | 57.6 | 72.2 | 92.4 | 38.2* | 53.2* | 66.6* | 72.0* | N/A | N/A | N/A | N/A | N/A | N/A | N/A | N/A | 127 |
| 120 | 72.7 | 101.5 | 126.9 | 152.4 | 57.7 | 80.5 | 100.7 | 128.7 | 49.3 | 68.7 | 86.1 | 109.9 | 43.6 | 60.8 | 76.2 | 97.5 | 39.6 | 55.2 | 69.2 | 88.4 | 36.5* | 51.0* | 63.8* | 66.0* | N/A | N/A | N/A | N/A | N/A | N/A | N/A | N/A | 124 |
| 130 | 69.9 | 97.5 | 121.9 | 149.3 | 55.5 | 77.3 | 96.7 | 123.7 | 47.2 | 66.1 | 82.7 | 105.7 | 41.8 | 58.4 | 73.2 | 93.7 | 38.0 | 53.0 | 66.4 | 83.8 | 35.1* | 49.0* | 61.0* | 61.0* | N/A | N/A | N/A | N/A | N/A | N/A | N/A | N/A | 122 |
| 140 | 67.3 | 93.9 | 117.5 | 146.5 | 53.5 | 74.5 | 93.3 | 119.3 | 45.6 | 63.5 | 79.7 | 101.9 | 40.4 | 56.4 | 70.6 | 90.3 | 36.7* | 51.2* | 64.0* | 77.8* | N/A | N/A | N/A | N/A | N/A | N/A | N/A | N/A | N/A | N/A | N/A | N/A | 117 |
| 150 | 65.1 | 90.7 | 113.5 | 144.1 | 51.7 | 71.9 | 90.1 | 115.1 | 44.0 | 61.5 | 76.9 | 98.3 | 39.0 | 54.4 | 68.2 | 87.2 | 35.5* | 49.4* | 61.8* | 72.6* | N/A | N/A | N/A | N/A | N/A | N/A | N/A | N/A | N/A | N/A | N/A | N/A | 114 |
| 160 | 62.9 | 87.9 | 109.9 | 140.5 | 49.9 | 69.7 | 87.3 | 111.5 | 42.6 | 59.5 | 74.5 | 95.3 | 37.9 | 52.6 | 66.0 | 84.4 | 34.3* | 47.8* | 59.8* | 68.0* | N/A | N/A | N/A | N/A | N/A | N/A | N/A | N/A | N/A | N/A | N/A | N/A | 111 |
| 170 | 61.1 | 85.1 | 106.7 | 136.3 | 48.5 | 67.5 | 84.5 | 108.1 | 41.2 | 57.7 | 72.3 | 92.3 | 36.7 | 51.0 | 64.0 | 81.8 | 33.3* | 46.4* | 58.0* | 64.0* | N/A | N/A | N/A | N/A | N/A | N/A | N/A | N/A | N/A | N/A | N/A | N/A | 107 |
| 180 | 59.3 | 82.7 | 103.7 | 132.5 | 47.1 | 65.7 | 82.3 | 105.1 | 40.2 | 56.1 | 70.3 | 89.7 | 35.7 | 49.6 | 62.2 | 79.6 | 32.3* | 45.0* | 56.4* | 60.4* | N/A | N/A | N/A | N/A | N/A | N/A | N/A | N/A | N/A | N/A | N/A | N/A | 105 |
| 190 | 57.9 | 80.5 | 100.9 | 128.9 | 45.9 | 63.9 | 80.1 | 102.3 | 39.0 | 54.4 | 68.3 | 87.3 | 34.7 | 48.4 | 60.6 | 77.4 | 31.5* | 43.8* | 55.0* | 57.2* | N/A | N/A | N/A | N/A | N/A | N/A | N/A | N/A | N/A | N/A | N/A | N/A | 102 |
| 200 | 56.3 | 78.5 | 98.3 | 125.7 | 44.7 | 62.3 | 77.9 | 99.7 | 38.0 | 53.0 | 66.7 | 85.1 | 33.9 | 47.0 | 59.0 | 75.4 | N/A | N/A | N/A | N/A | N/A | N/A | N/A | N/A | N/A | N/A | N/A | N/A | N/A | N/A | N/A | N/A | 100 |
| 210 | 54.9 | 76.7 | 95.9 | 122.7 | 43.7 | 60.7 | 76.1 | 97.3 | 37.3 | 51.8 | 64.8 | 83.1 | 33.1* | 46.0* | 57.6* | 73.6* | N/A | N/A | N/A | N/A | N/A | N/A | N/A | N/A | N/A | N/A | N/A | N/A | N/A | N/A | N/A | N/A | 97 |
| 220 | 53.7 | 74.9 | 93.7 | 119.9 | 42.5 | 59.3 | 74.3 | 95.1 | 36.3 | 50.6 | 63.4 | 81.1 | 32.3* | 44.8* | 56.2* | 72.0* | N/A | N/A | N/A | N/A | N/A | N/A | N/A | N/A | N/A | N/A | N/A | N/A | N/A | N/A | N/A | N/A | 95 |

* FOR INTERPOLATION ONLY (MAXIMUM WIDTH GOVERNS)

NOTES: "SB" = STORM BAR, SB #1 = 3", SB #2 = 3" WITH INSERT, SB #3 = 4", & SB #4 = 4" WITH INSERT

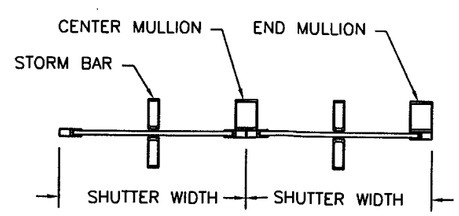


TWO SPANS

PRODUCT REVISED as complying with the Florida Building Code
Acceptance No 08-0929.02
Expiration Date 07/15/12
By Miami Dade Product Control Division


ROLL-A-WAY BY QMI
1661 GLENLAKE AVENUE
ITASCA, IL 60143


COPYRIGHT © 2008 QMI


DRAWING TITLE:
US60 DADE COUNTY
PRODUCT APPROVAL

D.L. Fowler
Professional Engineer
Florida License No.
PE0050458

7-4-08

| | |
|---|---|
| DRAWN: | DJN |
| DATE: | 03-15-02 |
| APPROVED: | DF |
| DATE: | 07-08-05 |
| DRAWING NO: | 3-01-024 |
| SIZE: B | REV: A |
| SCALE: | 3/8" = 1'-0" |
| SHEET: | 17 OF 19 |

# APPLICATION CHARTS FOR THREE SPAN SHUTTERS (MAX. LIMITS)

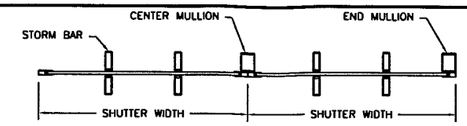


THREE SPANS

PRODUCT REVIEWED as complying with the Florida Building Code Acceptance No. 08-0929.02 Expiration Date 07/15/12 By Miami Dade Product Control Division

**HEADER #1, THREE SPANS**
MAXIMUM ALLOWABLE UNIT HEIGHTS, FOR GIVEN PRESSURE & UNIT WIDTH, PER TOTAL SYSTEM DEFLECTION LESS THAN 2"

| DESIGN PRESSURE, PSF | 70" UNIT WIDTH | | | | 90" UNIT WIDTH | | | | 110" UNIT WIDTH | | | | 130" UNIT WIDTH | | | | 150" UNIT WIDTH | | | | 170" UNIT WIDTH | | | | 190" UNIT WIDTH | | | | 210" UNIT WIDTH | | | | 230" UNIT WIDTH | | | | MAX. UNIT WIDTH |
|---|---|---|---|---|---|---|---|---|---|---|---|---|---|---|---|---|---|---|---|---|---|---|---|---|---|---|---|---|---|---|---|---|---|---|---|---|---|
| | SB #1 | SB #2 | SB #3 | SB #4 | SB #1 | SB #2 | SB #3 | SB #4 | SB #1 | SB #2 | SB #3 | SB #4 | SB #1 | SB #2 | SB #3 | SB #4 | SB #1 | SB #2 | SB #3 | SB #4 | SB #1 | SB #2 | SB #3 | SB #4 | SB #1 | SB #2 | SB #3 | SB #4 | SB #1 | SB #2 | SB #3 | SB #4 | SB #1 | SB #2 | SB #3 | SB #4 | |
| 30 | 131.9 | 153.2 | 184.6 | 206.2 | 120.5 | 139.3 | 167.2 | 185.8 | 108.7 | 125.5 | 135.9 | 135.9 | 96.3 | 96.3 | 96.3 | 96.3 | 71.7 | 71.7 | 71.7 | 71.7 | 55.5 | 55.5 | 55.5 | 55.5 | 42.3 | 42.9 | 43.1 | 43.3 | 28.8 | 29.0 | 29.0 | 29.0 | 20.0 | 20.2 | 20.2 | 20.2 | 263 |
| 35 | 126.7 | 147.1 | 177.2 | 197.8 | 111.9 | 133.5 | 159.8 | 177.0 | 100.7 | 116.5 | 116.5 | 116.5 | 82.5 | 82.5 | 82.5 | 82.5 | 61.5 | 61.5 | 61.5 | 61.5 | 47.5 | 47.5 | 47.5 | 47.5 | 36.8 | 37.0 | 37.2 | 37.2 | 24.8 | 24.8 | 25.0 | 25.0 | 17.2 | 17.2 | 17.2 | 17.2 | 255 |
| 40 | 119.9 | 141.9 | 171.0 | 190.8 | 104.7 | 128.3 | 153.6 | 154.8 | 94.1 | 101.9 | 101.9 | 101.9 | 72.1 | 72.1 | 72.1 | 72.1 | 53.7 | 53.7 | 53.7 | 53.7 | 41.5 | 41.5 | 41.5 | 41.5 | 32.4 | 32.4 | 32.6 | 32.6 | 21.8 | 21.8 | 21.8 | 21.8 | 15.0 | 15.0 | 15.0 | 15.0 | 243 |
| 45 | 113.1 | 137.5 | 165.6 | 184.8 | 98.7 | 124.1 | 137.5 | 137.5 | 88.7 | 90.5 | 90.5 | 90.5 | 64.1 | 64.1 | 64.1 | 64.1 | 47.7 | 47.7 | 47.7 | 47.7 | 37.0 | 37.0 | 37.0 | 37.0 | 28.8 | 29.0 | 29.0 | 29.0 | 19.4 | 19.4 | 19.4 | 19.4 | 13.4 | 13.4 | 13.4 | 13.4 | 235 |
| 50 | 107.3 | 133.7 | 161.0 | 179.6 | 93.7 | 120.1 | 123.7 | 123.7 | 81.5 | 81.5 | 81.5 | 81.5 | 57.7 | 57.7 | 57.7 | 57.7 | 42.9 | 42.9 | 42.9 | 42.9 | 33.4 | 33.4 | 33.4 | 33.4 | 26.0 | 26.0 | 26.2 | 26.2 | 17.4 | 17.4 | 17.4 | 17.4 | 12.0* | 12.0* | 12.0* | 12.0* | 228 |
| 55 | 102.3 | 130.3 | 157.0 | 175.0 | 89.3 | 112.5 | 112.5 | 112.5 | 74.1 | 74.1 | 74.1 | 74.1 | 52.5 | 52.5 | 52.5 | 52.5 | 39.1 | 39.1 | 39.1 | 39.1 | 30.2 | 30.2 | 30.2 | 30.2 | 23.6 | 23.8 | 23.8 | 23.8 | 15.8 | 15.8 | 15.8 | 15.8 | 11.0* | 11.0* | 11.0* | 11.0* | 220 |
| 60 | 97.9 | 127.3 | 153.2 | 170.8 | 85.5 | 103.1 | 103.1 | 103.1 | 67.9 | 67.9 | 67.9 | 67.9 | 48.1 | 48.1 | 48.1 | 48.1 | 35.8 | 35.8 | 35.8 | 35.8 | 27.8 | 27.8 | 27.8 | 27.8 | 21.8 | 21.8 | 21.8 | 21.8 | 14.6 | 14.6 | 14.6 | 14.6 | 10.0* | 10.0* | 10.0* | 10.0* | 213 |
| 70 | 90.7 | 122.1 | 146.7 | 150 | 79.1 | 88.3 | 88.3 | 88.3 | 58.1 | 58.1 | 58.1 | 58.1 | 41.1 | 41.1 | 41.1 | 41.1 | 30.8 | 30.8 | 30.8 | 30.8 | 23.8 | 23.8 | 23.8 | 23.8 | 18.6 | 18.6 | 18.6 | 18.6 | 12.4* | 12.4* | 12.4* | 12.4* | N/A | N/A | N/A | N/A | 203 |
| 80 | 84.9 | 117.7 | 131.3 | 131.3 | 74.1 | 77.3 | 77.3 | 77.3 | 50.9 | 50.9 | 50.9 | 50.9 | 36.2 | 36.2 | 36.2 | 36.2 | 27.0 | 27.0 | 27.0 | 27.0 | 20.8 | 20.8 | 20.8 | 20.8 | 16.4 | 16.4 | 16.4 | 16.4 | 11.0* | 11.0* | 11.0* | 11.0 | N/A | N/A | N/A | N/A | 195 |
| 90 | 79.9 | 111.5 | 116.7 | 116.7 | 68.7 | 68.7 | 68.7 | 68.7 | 45.3 | 45.3 | 45.3 | 45.3 | 32.2 | 32.2 | 32.2 | 32.2 | 24.0 | 24.0 | 24.0 | 24.0 | 18.6 | 18.6 | 18.6 | 18.6 | 14.6* | 14.6* | 14.6* | 14.6* | N/A | N/A | N/A | N/A | N/A | N/A | N/A | N/A | 186 |
| 100 | 75.9 | 104.9 | 104.9 | 104.9 | 61.9 | 61.9 | 61.9 | 61.9 | 40.7 | 40.7 | 40.7 | 40.7 | 29.0 | 29.0 | 29.0 | 29.0 | 21.6 | 21.6 | 21.6 | 21.6 | 16.6 | 16.6 | 16.6 | 16.6 | 13.0* | 13.0* | 13.0* | 13.0* | N/A | N/A | N/A | N/A | N/A | N/A | N/A | N/A | 180 |
| 110 | 72.3 | 95.3 | 95.3 | 95.3 | 56.3 | 56.3 | 56.3 | 56.3 | 37.0 | 37.0 | 37.0 | 37.0 | 26.2 | 26.2 | 26.2 | 26.2 | 19.6 | 19.6 | 19.6 | 19.6 | 15.2 | 15.2 | 15.2 | 15.2 | 11.8* | 11.8* | 12.0* | 12.0* | N/A | N/A | N/A | N/A | N/A | N/A | N/A | N/A | 175 |
| 120 | 69.3 | 87.5 | 87.5 | 87.5 | 51.5 | 51.5 | 51.5 | 51.5 | 34.0 | 34.0 | 34.0 | 34.0 | 24.0 | 24.0 | 24.0 | 24.0 | 18.0 | 18.0 | 18.0 | 18.0 | 13.7 | 13.7 | 13.7 | 13.7 | N/A | N/A | N/A | N/A | N/A | N/A | N/A | N/A | N/A | N/A | N/A | N/A | 170 |
| 130 | 66.5 | 80.7 | 80.7 | 80.7 | 47.5 | 47.5 | 47.5 | 47.5 | 31.4 | 31.4 | 31.4 | 31.4 | 22.2 | 22.2 | 22.2 | 22.2 | 16.6 | 16.6 | 16.6 | 16.6 | 12.7* | 12.7* | 12.7* | 12.7* | N/A | N/A | N/A | N/A | N/A | N/A | N/A | N/A | N/A | N/A | N/A | N/A | 166 |
| 140 | 64.1 | 74.9 | 74.9 | 74.9 | 44.1 | 44.1 | 44.1 | 44.1 | 29.2 | 29.2 | 29.2 | 29.2 | 20.6 | 20.6 | 20.6 | 20.6 | 15.4 | 15.4 | 15.4 | 15.4 | 11.9* | 11.9* | 11.9* | 11.9* | N/A | N/A | N/A | N/A | N/A | N/A | N/A | N/A | N/A | N/A | N/A | N/A | 162 |
| 150 | 61.9 | 69.9 | 69.9 | 69.9 | 41.1 | 41.1 | 41.1 | 41.1 | 27.2 | 27.2 | 27.2 | 27.2 | 19.2 | 19.2 | 19.2 | 19.2 | 14.4 | 14.4 | 14.4 | 14.4 | 11.1* | 11.1* | 11.1* | 11.1* | N/A | N/A | N/A | N/A | N/A | N/A | N/A | N/A | N/A | N/A | N/A | N/A | 157 |
| 160 | 59.9 | 65.5 | 65.5 | 65.5 | 38.7 | 38.7 | 38.7 | 38.7 | 25.6 | 25.6 | 25.6 | 25.6 | 18.0 | 18.0 | 18.0 | 18.0 | 13.3 | 13.3 | 13.3 | 13.3 | 10.3* | 10.3* | 10.3* | 10.3* | N/A | N/A | N/A | N/A | N/A | N/A | N/A | N/A | N/A | N/A | N/A | N/A | 156 |
| 170 | 58.1 | 61.7 | 61.7 | 61.7 | 36.4 | 36.4 | 36.4 | 36.4 | 24.0 | 24.0 | 24.0 | 24.0 | 17.0 | 17.0 | 17.0 | 17.0 | 12.5 | 12.5 | 12.5 | 12.5 | 9.7 * | 9.7 * | 9.7 * | 9.7 * | N/A | N/A | N/A | N/A | N/A | N/A | N/A | N/A | N/A | N/A | N/A | N/A | 153 |
| 180 | 56.5 | 58.3 | 58.3 | 58.3 | 34.4 | 34.4 | 34.4 | 34.4 | 22.6 | 22.6 | 22.6 | 22.6 | 16.0 | 16.0 | 16.0 | 16.0 | 11.9* | 11.9* | 11.9* | 11.9* | N/A | N/A | N/A | N/A | N/A | N/A | N/A | N/A | N/A | N/A | N/A | N/A | N/A | N/A | N/A | N/A | 149 |
| 190 | 54.9 | 55.1 | 55.1 | 55.1 | 32.6 | 32.6 | 32.6 | 32.6 | 21.4 | 21.4 | 21.4 | 21.4 | 15.2 | 15.2 | 15.2 | 15.2 | 11.3* | 11.3* | 11.3* | 11.3* | N/A | N/A | N/A | N/A | N/A | N/A | N/A | N/A | N/A | N/A | N/A | N/A | N/A | N/A | N/A | N/A | 146 |
| 200 | 52.5 | 52.5 | 52.5 | 52.5 | 31.0 | 31.0 | 31.0 | 31.0 | 20.4 | 20.4 | 20.4 | 20.4 | 14.4 | 14.4 | 14.4 | 14.4 | 10.7* | 10.7* | 10.7* | 10.7* | N/A | N/A | N/A | N/A | N/A | N/A | N/A | N/A | N/A | N/A | N/A | N/A | N/A | N/A | N/A | N/A | 145 |
| 210 | 49.9 | 49.9 | 49.9 | 49.9 | 29.4 | 29.4 | 29.4 | 29.4 | 19.4 | 19.4 | 19.4 | 19.4 | 13.7 | 13.7 | 13.7 | 13.7 | 10.1* | 10.1* | 10.1* | 10.1* | N/A | N/A | N/A | N/A | N/A | N/A | N/A | N/A | N/A | N/A | N/A | N/A | N/A | N/A | N/A | N/A | 143 |
| 220 | 47.7 | 47.7 | 47.7 | 47.7 | 28.2 | 28.2 | 28.2 | 28.2 | 18.6 | 18.6 | 18.6 | 18.6 | 13.1 | 13.1 | 13.1 | 13.1 | 9.7 * | 9.7 * | 9.7 * | 9.7 * | N/A | N/A | N/A | N/A | N/A | N/A | N/A | N/A | N/A | N/A | N/A | N/A | N/A | N/A | N/A | N/A | 140 |

**HEADER #2, THREE SPANS**
MAXIMUM ALLOWABLE UNIT HEIGHTS, FOR GIVEN PRESSURE & UNIT WIDTH, PER TOTAL SYSTEM DEFLECTION LESS THAN 2"

| DESIGN PRESSURE, PSF | 70" UNIT WIDTH | | | | 90" UNIT WIDTH | | | | 110" UNIT WIDTH | | | | 130" UNIT WIDTH | | | | 150" UNIT WIDTH | | | | 170" UNIT WIDTH | | | | 190" UNIT WIDTH | | | | 210" UNIT WIDTH | | | | 230" UNIT WIDTH | | | | MAX. UNIT WIDTH |
|---|---|---|---|---|---|---|---|---|---|---|---|---|---|---|---|---|---|---|---|---|---|---|---|---|---|---|---|---|---|---|---|---|---|---|---|---|---|
| | SB #1 | SB #2 | SB #3 | SB #4 | SB #1 | SB #2 | SB #3 | SB #4 | SB #1 | SB #2 | SB #3 | SB #4 | SB #1 | SB #2 | SB #3 | SB #4 | SB #1 | SB #2 | SB #3 | SB #4 | SB #1 | SB #2 | SB #3 | SB #4 | SB #1 | SB #2 | SB #3 | SB #4 | SB #1 | SB #2 | SB #3 | SB #4 | SB #1 | SB #2 | SB #3 | SB #4 | |
| 30 | 133.1 | 154.8 | 187.0 | 209.2 | 120.9 | 143.5 | 173.2 | 193.6 | 108.7 | 134.3 | 161.6 | 180.0 | 99.5 | 125.5 | 150.2 | 166.8 | 92.3 | 116.3 | 137.7 | 150.2 | 86.5 | 105.9 | 116.1 | 116.1 | 81.7 | 92.5 | 92.5 | 92.5 | 72.5 | 75.5 | 75.5 | 75.5 | 59.7 | 62.7 | 62.7 | 62.7 | 263 |
| 35 | 127.9 | 148.9 | 179.8 | 201.2 | 111.9 | 137.9 | 166.4 | 185.8 | 100.7 | 128.7 | 154.8 | 172.6 | 92.1 | 119.9 | 143.3 | 159.0 | 85.5 | 110.5 | 128.7 | 128.7 | 80.1 | 99.5 | 99.5 | 99.5 | 75.7 | 79.3 | 79.3 | 79.3 | 64.7 | 64.7 | 64.7 | 64.7 | 53.3 | 53.7 | 53.7 | 53.7 | 255 |
| 40 | 119.9 | 143.9 | 173.8 | 194.4 | 104.7 | 133.3 | 160.6 | 179.4 | 94.1 | 124.1 | 149.1 | 166.2 | 86.1 | 115.3 | 137.5 | 151.2 | 79.9 | 105.7 | 112.5 | 112.5 | 74.9 | 87.1 | 87.1 | 87.1 | 69.3 | 69.3 | 69.3 | 69.3 | 56.5 | 56.5 | 56.5 | 56.5 | 46.8 | 46.8 | 46.8 | 46.8 | 243 |
| 45 | 113.1 | 139.7 | 168.6 | 188.6 | 98.7 | 129.1 | 155.8 | 173.8 | 88.7 | 120.1 | 144.1 | 160.6 | 81.3 | 111.3 | 132.5 | 134.3 | 75.3 | 100.1 | 100.1 | 100.1 | 70.7 | 77.3 | 77.3 | 77.3 | 61.7 | 61.7 | 61.7 | 61.7 | 50.3 | 50.3 | 50.2 | 50.2 | 41.6 | 41.6 | 41.6 | 41.6 | 235 |
| 50 | 107.3 | 135.9 | 164.2 | 183.6 | 93.7 | 125.7 | 151.4 | 169.0 | 84.1 | 116.7 | 139.9 | 155.8 | 77.1 | 107.3 | 120.9 | 120.9 | 71.5 | 90.1 | 90.1 | 90.1 | 66.9 | 69.7 | 69.7 | 69.7 | 55.5 | 55.5 | 55.5 | 55.5 | 45.2 | 45.2 | 45.2 | 45.2 | 37.5* | 37.5* | 37.5* | 37.5* | 228 |
| 55 | 102.3 | 132.7 | 160.2 | 179.2 | 89.3 | 122.5 | 147.5 | 164.8 | 80.3 | 111.9 | 136.1 | 151.6 | 73.5 | 102.3 | 109.9 | 109.9 | 68.1 | 81.9 | 81.9 | 81.9 | 63.3 | 63.3 | 63.3 | 63.3 | 50.5 | 50.5 | 50.5 | 50.5 | 41.0 | 41.0 | 41.0 | 41.0 | 34.1* | 34.1* | 34.1* | 34.1* | 220 |
| 60 | 97.9 | 129.7 | 156.8 | 175.2 | 85.5 | 119.1 | 144.1 | 161.0 | 76.9 | 107.1 | 132.7 | 142.3 | 70.3 | 98.1 | 100.7 | 100.7 | 65.3 | 75.1 | 75.1 | 75.1 | 58.1 | 58.1 | 58.1 | 58.1 | 46.3 | 46.2 | 46.2 | 46.2 | 37.7 | 37.7 | 37.7 | 37.7 | 31.3* | 31.3* | 31.3* | 31.3* | 213 |
| 70 | 90.7 | 124.7 | 150.6 | 168.4 | 79.1 | 110.3 | 138.1 | 154.4 | 71.1 | 99.1 | 121.9 | 121.9 | 65.1 | 86.3 | 86.3 | 86.3 | 60.5 | 64.3 | 64.3 | 64.3 | 49.7 | 49.7 | 49.7 | 49.7 | 39.4 | 39.4 | 39.4 | 39.4 | 32.3* | 32.3* | 32.3* | 32.3* | N/A | N/A | N/A | N/A | 203 |
| 80 | 84.9 | 118.1 | 145.5 | 162.6 | 74.1 | 103.1 | 129.1 | 148.7 | 66.5 | 92.7 | 106.7 | 106.7 | 60.9 | 75.5 | 75.5 | 75.5 | 56.3 | 56.3 | 56.3 | 56.3 | 43.4 | 43.4 | 43.4 | 43.4 | 34.7 | 34.7 | 34.7 | 34.7 | 28.3* | 28.3* | 28.3* | 28.3* | N/A | N/A | N/A | N/A | 195 |
| 90 | 79.9 | 111.5 | 139.5 | 157.8 | 69.7 | 97.3 | 121.7 | 143.9 | 62.7 | 87.3 | 94.7 | 94.7 | 57.5 | 67.1 | 67.1 | 67.1 | 49.9 | 49.9 | 49.9 | 49.9 | 38.6 | 38.6 | 38.6 | 38.6 | 30.7* | 30.7* | 30.7* | 30.7* | N/A | N/A | N/A | N/A | N/A | N/A | N/A | N/A | 186 |
| 100 | 75.9 | 105.7 | 132.3 | 153.4 | 66.1 | 92.3 | 115.5 | 129.5 | 59.5 | 82.9 | 85.3 | 85.3 | 54.5 | 60.3 | 60.3 | 60.3 | 44.9 | 44.9 | 44.8 | 44.8 | 34.7 | 34.7 | 34.7 | 34.7 | 27.7* | 27.7* | 27.7* | 27.7* | N/A | N/A | N/A | N/A | N/A | N/A | N/A | N/A | 180 |
| 110 | 72.3 | 100.7 | 126.1 | 149.5 | 63.1 | 87.9 | 110.1 | 117.7 | 56.7 | 77.5 | 77.5 | 77.5 | 51.9 | 54.9 | 54.9 | 54.9 | 40.8 | 40.8 | 40.8 | 40.8 | 31.7 | 31.7 | 31.7 | 31.7 | 25.1* | 25.1* | 25.1* | 25.1* | N/A | N/A | N/A | N/A | N/A | N/A | N/A | N/A | 175 |
| 120 | 69.3 | 96.5 | 120.7 | 146.3 | 60.5 | 84.3 | 105.5 | 107.9 | 54.3 | 71.1 | 71.1 | 71.1 | 49.7 | 50.3 | 50.3 | 50.3 | 37.5 | 37.5 | 37.5 | 37.5 | 28.9 | 28.9 | 28.9 | 28.9 | N/A | N/A | N/A | N/A | N/A | N/A | N/A | N/A | N/A | N/A | N/A | N/A | 170 |
| 130 | 66.5 | 92.7 | 116.1 | 143.1 | 58.1 | 80.9 | 99.7 | 99.7 | 52.1 | 65.5 | 65.5 | 65.5 | 46.5 | 46.5 | 46.5 | 46.5 | 34.5 | 34.5 | 34.5 | 34.5 | 26.7* | 26.7* | 26.7* | 26.7* | N/A | N/A | N/A | N/A | N/A | N/A | N/A | N/A | N/A | N/A | N/A | N/A | 166 |
| 140 | 64.1 | 89.3 | 111.9 | 140.3 | 55.9 | 77.9 | 92.5 | 92.5 | 50.3 | 60.9 | 60.9 | 60.9 | 43.1 | 43.1 | 43.0 | 43.0 | 32.1 | 32.1 | 32.1 | 32.1 | 24.9* | 24.9* | 24.9* | 24.9* | N/A | N/A | N/A | N/A | N/A | N/A | N/A | N/A | N/A | N/A | N/A | N/A | 162 |
| 150 | 61.9 | 86.3 | 108.1 | 137.9 | 54.1 | 75.3 | 86.3 | 86.3 | 48.5 | 56.9 | 56.9 | 56.9 | 40.3 | 40.2 | 40.2 | 40.2 | 29.9 | 29.9 | 29.9 | 29.9 | 23.1* | 23.1* | 23.1* | 23.1* | N/A | N/A | N/A | N/A | N/A | N/A | N/A | N/A | N/A | N/A | N/A | N/A | 157 |
| 160 | 59.9 | 83.5 | 104.5 | 133.7 | 52.3 | 72.9 | 80.9 | 80.9 | 47.1 | 53.3 | 53.3 | 53.3 | 37.7 | 37.7 | 37.7 | 37.7 | 28.1 | 28.1 | 28.1 | 28.1 | 21.7* | 21.7* | 21.7* | 21.7* | N/A | N/A | N/A | N/A | N/A | N/A | N/A | N/A | N/A | N/A | N/A | N/A | 156 |
| 170 | 58.1 | 81.1 | 101.5 | 129.3 | 50.7 | 70.7 | 76.1 | 76.1 | 45.5 | 50.1 | 50.1 | 50.1 | 35.5 | 35.5 | 35.5 | 35.5 | 26.5 | 26.5 | 26.5 | 26.5 | 20.5* | 20.5* | 20.5* | 20.5* | N/A | N/A | N/A | N/A | N/A | N/A | N/A | N/A | N/A | N/A | N/A | N/A | 153 |
| 180 | 56.5 | 78.7 | 98.7 | 122.1 | 49.3 | 68.7 | 71.9 | 71.9 | 44.3 | 47.3 | 47.3 | 47.3 | 33.5 | 33.5 | 33.5 | 33.5 | 24.9* | 24.9* | 24.9* | 24.9* | N/A | N/A | N/A | N/A | N/A | N/A | N/A | N/A | N/A | N/A | N/A | N/A | N/A | N/A | N/A | N/A | 149 |
| 190 | 54.9 | 76.7 | 95.9 | 115.5 | 47.9 | 66.9 | 68.1 | 68.1 | 43.1 | 44.9 | 44.9 | 44.9 | 31.7 | 31.7 | 31.7 | 31.7 | 23.7* | 23.7* | 23.7* | 23.7* | N/A | N/A | N/A | N/A | N/A | N/A | N/A | N/A | N/A | N/A | N/A | N/A | N/A | N/A | N/A | N/A | 146 |
| 200 | 53.7 | 74.7 | 93.5 | 109.9 | 46.7 | 64.7 | 64.7 | 64.7 | 42.1 | 42.7 | 42.7 | 42.6 | 30.1 | 30.1 | 30.1 | 30.1 | 22.5* | 22.5* | 22.5* | 22.5* | N/A | N/A | N/A | N/A | N/A | N/A | N/A | N/A | N/A | N/A | N/A | N/A | N/A | N/A | N/A | N/A | 145 |
| 210 | 52.3 | 72.9 | 91.3 | 104.5 | 45.7 | 61.7 | 61.7 | 61.7 | 40.5 | 40.5 | 40.4 | 40.4 | 28.7 | 28.7 | 28.7 | 28.7 | 21.3* | 21.3* | 21.3* | 21.3* | N/A | N/A | N/A | N/A | N/A | N/A | N/A | N/A | N/A | N/A | N/A | N/A | N/A | N/A | N/A | N/A | 143 |
| 220 | 51.1 | 71.3 | 89.1 | 99.9 | 44.5 | 58.9 | 58.9 | 58.9 | 38.7 | 38.7 | 38.6 | 38.6 | 27.3 | 27.3 | 27.3 | 27.3 | 20.3* | 20.3* | 20.3* | 20.3* | N/A | N/A | N/A | N/A | N/A | N/A | N/A | N/A | N/A | N/A | N/A | N/A | N/A | N/A | N/A | N/A | 140 |

* FOR INTERPOLATION ONLY (MAXIMUM WIDTH GOVERNS)

NOTES: "SB" = STORM BAR, SB #1 = 3", SB #2 = 3" WITH INSERT, SB #3 = 4", & SB #4 = 4" WITH INSERT


ROLL-A-WAY BY QMI
1661 GLENLAKE AVENUE
ITASCA, IL 60143


COPYRIGHT © 2008 QMI


DRAWING TITLE:
US60 DADE COUNTY
PRODUCT APPROVAL

D.L. Fowler
Professional Engineer
Florida License No.
PE0050458

11-4-08

| | |
|---|---|
| DRAWN: | DJN |
| DATE: | 03-15-02 |
| APPROVED: | DF |
| DATE: | 07-08-05 |
| DRAWING NO: | 3-01-024 |
| SIZE: B | REV: A |
| SCALE: | 3/8" = 1'-0" |
| SHEET: | 18 OF 19 |

# APPLICATION CHART FOR THREE SPAN SHUTTERS (MAX. LIMITS)

**HEADER #3, THREE SPANS**

MAXIMUM ALLOWABLE UNIT HEIGHTS, FOR GIVEN PRESSURE & UNIT WIDTH, PER TOTAL SYSTEM DEFLECTION LESS THAN 2"

| DESIGN PRESSURE, PSF | 70" UNIT WIDTH | | | | 90" UNIT WIDTH | | | | 110" UNIT WIDTH | | | | 130" UNIT WIDTH | | | | 150" UNIT WIDTH | | | | 170" UNIT WIDTH | | | | 190" UNIT WIDTH | | | | 210" UNIT WIDTH | | | | 230" UNIT WIDTH | | | | MAX. UNIT WIDTH |
|---|---|---|---|---|---|---|---|---|---|---|---|---|---|---|---|---|---|---|---|---|---|---|---|---|---|---|---|---|---|---|---|---|---|---|---|---|---|
| | SB #1 | SB #2 | SB #3 | SB #4 | SB #1 | SB #2 | SB #3 | SB #4 | SB #1 | SB #2 | SB #3 | SB #4 | SB #1 | SB #2 | SB #3 | SB #4 | SB #1 | SB #2 | SB #3 | SB #4 | SB #1 | SB #2 | SB #3 | SB #4 | SB #1 | SB #2 | SB #3 | SB #4 | SB #1 | SB #2 | SB #3 | SB #4 | SB #1 | SB #2 | SB #3 | SB #4 | |
| 30 | 133.3 | 155.2 | 187.6 | 210.0 | 120.9 | 144.5 | 174.6 | 195.4 | 108.7 | 136.3 | 164.4 | 183.8 | 99.5 | 129.1 | 155.6 | 173.6 | 92.3 | 122.7 | 147.1 | 164.0 | 86.5 | 116.1 | 138.7 | 153.8 | 81.7 | 109.3 | 129.5 | 142.7 | 77.5 | 101.7 | 119.1 | 130.1 | 74.1 | 93.1 | 106.9 | 115.5 | 263 |
| 35 | 128.3 | 149.3 | 180.4 | 202.0 | 111.9 | 138.9 | 168.0 | 187.8 | 100.7 | 130.9 | 158.0 | 176.6 | 92.1 | 123.9 | 149.1 | 166.6 | 85.5 | 117.5 | 140.9 | 156.8 | 80.1 | 110.9 | 132.1 | 146.5 | 75.7 | 103.9 | 122.7 | 135.1 | 71.9 | 96.1 | 111.9 | 121.9 | 68.4 | 86.9 | 99.1 | 105.1 | 255 |
| 40 | 119.9 | 144.3 | 174.4 | 195.2 | 104.7 | 134.3 | 162.4 | 181.4 | 94.1 | 126.5 | 152.6 | 170.4 | 86.1 | 119.7 | 143.9 | 160.6 | 79.9 | 111.5 | 135.5 | 150.8 | 74.9 | 104.5 | 126.7 | 140.3 | 70.7 | 98.5 | 116.9 | 128.5 | 67.0 | 91.1 | 105.5 | 110.7 | 64.0 | 81.7 | 91.8 | 91.8 | 243 |
| 45 | 113.1 | 140.1 | 169.4 | 189.6 | 98.7 | 130.3 | 157.6 | 176.2 | 88.7 | 122.7 | 147.9 | 165.2 | 81.3 | 113.3 | 139.3 | 155.4 | 75.3 | 105.1 | 130.9 | 145.5 | 70.7 | 98.5 | 121.9 | 134.7 | 66.7 | 92.9 | 111.9 | 120.7 | 63.2 | 86.9 | 98.5 | 98.5 | 60.4 | 77.1 | 81.6 | 81.6 | 235 |
| 50 | 107.3 | 136.5 | 165.0 | 184.6 | 93.7 | 126.9 | 153.4 | 171.4 | 84.1 | 117.3 | 143.9 | 160.6 | 77.1 | 107.3 | 134.5 | 150.8 | 71.5 | 99.7 | 124.7 | 140.9 | 66.9 | 93.3 | 116.9 | 130.1 | 63.2 | 88.1 | 107.5 | 108.7 | 60.0 | 83.1 | 88.5 | 88.4 | 57.2* | 72.9* | 73.4* | 73.4* | 228 |
| 55 | 102.3 | 133.1 | 161.0 | 180.2 | 89.3 | 123.9 | 149.5 | 167.2 | 80.3 | 111.9 | 139.9 | 156.6 | 73.5 | 102.3 | 128.1 | 146.7 | 68.1 | 95.1 | 118.9 | 136.7 | 63.9 | 89.1 | 111.5 | 123.9 | 60.2 | 84.1 | 98.7 | 98.7 | 57.2 | 79.7 | 80.4 | 80.4 | 54.6* | 66.8* | 66.8* | 66.8* | 220 |
| 60 | 97.9 | 130.3 | 157.6 | 176.2 | 85.5 | 119.1 | 146.1 | 163.6 | 76.9 | 107.1 | 134.1 | 153.0 | 70.3 | 98.1 | 122.7 | 143.1 | 65.3 | 90.9 | 113.9 | 133.1 | 61.1 | 85.3 | 106.7 | 113.7 | 57.6 | 80.5 | 90.5 | 90.5 | 54.8 | 73.6 | 73.6 | 73.6 | 52.2* | 61.2* | 61.2* | 61.2* | 213 |
| 70 | 90.7 | 125.3 | 151.6 | 169.4 | 79.1 | 110.3 | 138.1 | 157.2 | 71.1 | 99.1 | 124.1 | 146.7 | 65.1 | 90.7 | 113.7 | 136.9 | 60.5 | 84.3 | 105.5 | 125.9 | 56.6 | 78.9 | 97.3 | 97.3 | 53.4 | 74.5 | 77.4 | 77.4 | 50.6* | 63.2* | 63.2* | 63.2* | N/A | N/A | N/A | N/A | 203 |
| 80 | 84.9 | 118.1 | 146.3 | 163.8 | 74.1 | 103.1 | 129.1 | 151.8 | 66.5 | 92.7 | 116.1 | 141.5 | 60.9 | 84.9 | 106.3 | 131.7 | 56.5 | 78.7 | 98.7 | 110.1 | 52.8 | 73.7 | 85.1 | 85.1 | 49.8 | 67.8 | 67.8 | 67.8 | 47.4* | 55.2* | 55.2* | 55.2* | N/A | N/A | N/A | N/A | 195 |
| 90 | 79.9 | 111.5 | 139.5 | 159.0 | 69.7 | 97.3 | 121.7 | 147.1 | 62.7 | 87.3 | 109.5 | 137.1 | 57.5 | 80.1 | 100.1 | 127.1 | 53.2 | 74.3 | 92.9 | 97.9 | 49.8 | 69.5 | 75.6 | 75.6 | 47.0* | 60.2* | 60.2* | 60.2* | N/A | N/A | N/A | N/A | N/A | N/A | N/A | N/A | 186 |
| 100 | 75.9 | 105.7 | 132.3 | 154.8 | 66.1 | 92.3 | 115.5 | 143.1 | 59.5 | 82.9 | 103.7 | 132.7 | 54.5 | 75.9 | 95.1 | 118.3 | 50.4 | 70.5 | 88.1 | 88.1 | 47.2 | 65.8 | 68.0 | 68.0 | 44.6* | 54.2* | 54.2* | 54.2* | N/A | N/A | N/A | N/A | N/A | N/A | N/A | N/A | 180 |
| 110 | 72.3 | 100.7 | 126.1 | 151 | 63.1 | 87.9 | 110.1 | 139.5 | 56.7 | 79.1 | 98.9 | 126.5 | 51.9 | 72.3 | 90.7 | 107.5 | 48.0 | 67.1 | 80.1 | 80.1 | 45.0 | 61.8 | 61.8 | 61.8 | 42.6* | 49.2* | 49.2* | 49.2* | N/A | N/A | N/A | N/A | N/A | N/A | N/A | N/A | 175 |
| 120 | 69.3 | 96.5 | 120.7 | 147.7 | 60.5 | 84.3 | 105.5 | 134.7 | 54.3 | 75.7 | 94.7 | 121.1 | 49.6 | 69.3 | 86.7 | 98.5 | 46.0 | 64.3 | 73.3 | 73.2 | 43.2 | 56.6 | 56.6 | 56.6 | N/A | N/A | N/A | N/A | N/A | N/A | N/A | N/A | N/A | N/A | N/A | N/A | 170 |
| 130 | 66.5 | 92.7 | 116.1 | 144.7 | 58.1 | 80.9 | 101.3 | 129.5 | 52.1 | 72.7 | 91.1 | 116.3 | 47.6 | 66.5 | 83.3 | 90.9 | 44.2 | 61.6 | 67.6 | 67.6 | 41.4* | 52.2* | 52.2* | 52.2* | N/A | N/A | N/A | N/A | N/A | N/A | N/A | N/A | N/A | N/A | N/A | N/A | 166 |
| 140 | 64.1 | 89.3 | 111.9 | 141.9 | 55.9 | 77.9 | 97.5 | 124.7 | 50.3 | 70.1 | 87.7 | 112.1 | 46.0 | 64.1 | 80.3 | 84.5 | 42.6 | 59.4 | 62.8 | 62.8 | 39.8* | 48.6* | 48.6* | 48.6* | N/A | N/A | N/A | N/A | N/A | N/A | N/A | N/A | N/A | N/A | N/A | N/A | 162 |
| 150 | 61.9 | 86.3 | 108.1 | 138.1 | 54.1 | 75.3 | 94.3 | 120.5 | 48.5 | 67.7 | 84.7 | 108.3 | 44.4 | 61.9 | 77.5 | 78.7 | 41.2 | 57.4 | 58.6 | 58.6 | 38.6* | 45.2* | 45.2* | 45.2* | N/A | N/A | N/A | N/A | N/A | N/A | N/A | N/A | N/A | N/A | N/A | N/A | 157 |
| 160 | 59.9 | 83.5 | 104.5 | 133.7 | 52.3 | 72.9 | 91.3 | 116.7 | 47.1 | 65.5 | 82.1 | 104.3 | 43.0 | 59.9 | 73.9 | 73.9 | 39.8 | 55.0 | 55.0 | 55.0 | 37.5* | 42.4* | 42.4* | 42.4* | N/A | N/A | N/A | N/A | N/A | N/A | N/A | N/A | N/A | N/A | N/A | N/A | 156 |
| 170 | 58.1 | 81.1 | 101.5 | 129.7 | 50.7 | 70.7 | 88.5 | 113.3 | 45.5 | 63.5 | 79.5 | 98.1 | 41.6 | 58.1 | 69.5 | 69.4 | 38.6 | 51.6 | 51.6 | 51.6 | 36.3* | 40.0* | 40.0* | 40.0* | N/A | N/A | N/A | N/A | N/A | N/A | N/A | N/A | N/A | N/A | N/A | N/A | 153 |
| 180 | 56.5 | 78.7 | 98.7 | 126.1 | 49.3 | 68.7 | 86.1 | 110.1 | 44.2 | 61.7 | 77.3 | 92.7 | 40.4 | 56.4 | 65.6 | 65.6 | 37.7* | 48.8* | 48.8* | 48.8* | N/A | N/A | N/A | N/A | N/A | N/A | N/A | N/A | N/A | N/A | N/A | N/A | N/A | N/A | N/A | N/A | 149 |
| 190 | 54.9 | 76.7 | 95.9 | 122.7 | 47.9 | 66.9 | 83.7 | 107.1 | 43.0 | 60.1 | 75.3 | 87.9 | 39.4 | 55.0 | 62.0 | 62.0 | 36.7* | 46.2* | 46.2* | 46.2* | N/A | N/A | N/A | N/A | N/A | N/A | N/A | N/A | N/A | N/A | N/A | N/A | N/A | N/A | N/A | N/A | 146 |
| 200 | 53.7 | 74.7 | 93.5 | 119.7 | 46.7 | 65.3 | 81.7 | 104.3 | 42.0 | 58.5 | 73.3 | 83.5 | 38.4 | 53.6 | 59.0 | 59.0 | 35.7* | 43.8* | 43.8* | 43.8* | N/A | N/A | N/A | N/A | N/A | N/A | N/A | N/A | N/A | N/A | N/A | N/A | N/A | N/A | N/A | N/A | 145 |
| 210 | 52.3 | 72.9 | 91.3 | 116.7 | 45.7 | 63.7 | 79.7 | 101.9 | 41.0 | 57.1 | 71.5 | 79.5 | 37.5 | 52.2 | 56.2 | 56.2 | 34.9* | 41.8* | 41.8* | 41.8* | N/A | N/A | N/A | N/A | N/A | N/A | N/A | N/A | N/A | N/A | N/A | N/A | N/A | N/A | N/A | N/A | 143 |
| 220 | 51.1 | 71.3 | 89.1 | 114.1 | 44.5 | 62.1 | 77.9 | 99.5 | 40.0 | 55.9 | 69.9 | 75.9 | 36.7 | 51.0 | 53.6 | 53.6 | 34.1* | 39.8* | 39.8* | 39.8* | N/A | N/A | N/A | N/A | N/A | N/A | N/A | N/A | N/A | N/A | N/A | N/A | N/A | N/A | N/A | N/A | 140 |

* FOR INTERPOLATION ONLY (MAXIMUM WIDTH GOVERNS)

NOTES: "SB" = STORM BAR, SB #1 = 3", SB #2 = 3" WITH INSERT, SB #3 = 4", & SB #4 = 4" WITH INSERT

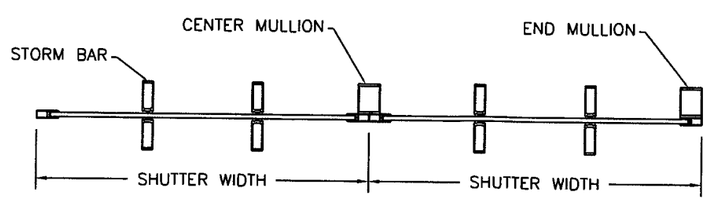


THREE SPANS

PRODUCT REVISED
as complying with the Florida
Building Code
Amendment No. 08-0929.02
Expiration Date 07/15/12
By M Thach
Miami-Dade Product Control
Division


ROLL-A-WAY BY QMI
1661 GLENLAKE AVENUE
ITASCA, IL 60143


COPYRIGHT © 2008
QMI


DRAWING TITLE:
US60 DADE COUNTY
PRODUCT APPROVAL

D.L. Fowler
Professional Engineer
Florida License No.
PE0050458

11-4-08

| | |
|---|---|
| DRAWN: | DJN |
| DATE: | 03-15-02 |
| APPROVED: | DF |
| DATE: | 07-08-05 |
| DRAWING NO: | 3-01-024 |
| SIZE: B | REV: A |
| SCALE: | 3/8" = 1'-0" |
| SHEET: | 19 OF 19 |