MIAMI-DADE COUNTY
BUILDING CODE COMPLIANCE OFFICE (BCCO)
PRODUCT CONTROL DIVISION

MIAMI-DADE COUNTY, FLORIDA
METRO-DADE FLAGLER BUILDING

140 WEST FLAGLER STREET, SUITE 1603
MIAMI, FLORIDA 33130-1563
(305) 375-2901 FAX (305) 375-2908
www.miamidade.gov

NOTICE OF ACCEPTANCE (NOA)

R. C. Aluminum Shutters, Inc.
2805 N.W. 75th Avenue
Miami, Florida 33122

SCOPE:

This NOA is being issued under the applicable rules and regulations governing the use of construction materials. The documentation submitted has been reviewed by Miami-Dade County Product Control Division and accepted by the Board of Rules and Appeals (BORA) to be used in Miami Dade County and other areas where allowed by the Authority Having Jurisdiction (AHJ).

This NOA shall not be valid after the expiration date stated below. The Miami-Dade County Product Control Division (In Miami Dade County) and/or the AHJ (in areas other than Miami Dade County) reserve the right to have this product or material tested for quality assurance purposes. If this product or material fails to perform in the accepted manner, the manufacturer will incur the expense of such testing and the AHJ may immediately revoke, modify, or suspend the use of such product or material within their jurisdiction. BORA reserves the right to revoke this acceptance, if it is determined by Miami-Dade County Product Control Division that this product or material fails to meet the requirements of the applicable building code.

This product is approved as described herein, and has been designed to comply with the High Velocity Hurricane Zone of the Florida Building Code.

DESCRIPTION: " AS-600 Advanced " Aluminum Accordion Shutter

APPROVAL DOCUMENT: Dwg. No. 08-05, titled "AS-600 Advanced Aluminum Accordion Shutter", sheets 1 through 7 of 7, prepared by Al-Farooq Corporation, dated May 08, 2008, last revision #A dated January 22, 2009, signed and sealed by Humayoun Farooq, P.E. bearing the Miami-Dade County Product Control Approval stamp with the Notice of Acceptance number and the approval date by the Miami-Dade County Product Control Division.

MISSILE IMPACT RATING: Large and Small Missile Impact

LABELING: Each unit shall bear a permanent label with the manufacturer's name or logo, city, state and the following statement: "Miami-Dade County Product Control Approved", unless otherwise noted herein.

RENEWAL of this NOA shall be considered after a renewal application has been filed and there has been no change in the applicable building code negatively affecting the performance of this product.

TERMINATION of this NOA will occur after the expiration date or if there has been a revision or change in the materials, use, and/or manufacture of the product or process. Misuse of this NOA as an endorsement of any product, for sales, advertising or any other purposes shall automatically terminate this NOA. Failure to comply with any section of this NOA shall be cause for termination and removal of NOA.

ADVERTISEMENT: The NOA number preceded by the words Miami-Dade County, Florida, and followed by the expiration date may be displayed in advertising literature. If any portion of the NOA is displayed, then it shall be done in its entirety.

INSPECTION: A copy of this entire NOA shall be provided to the user by the manufacturer or its distributors and shall be available for inspection at the job site at the request of the Building Official.

This NOA consists of this page 1, evidence submitted page E-1 as well as approval document mentioned above. The submitted documentation was reviewed by **Helmy A. Makar, P.E., M.S.**

MIAMI-DADE COUNTY APPROVED

Helmy A. Makar
03/18/2009

NOA No. 08-1008.05
Expiration Date: 03/18/2014
Approval Date: 03/18/2009

R. C. Aluminum Shutters, Inc.

NOTICE OF ACCEPTANCE: EVIDENCE SUBMITTED

A. DRAWINGS

1. *Drawing No. 08-05, titled "AS-600 Advanced Aluminum Accordion Shutter", sheets 1 through 7 of 7, prepared by Al-Farooq Corporation, dated May 08, 2008, last revision #A dated January 22, 2009, signed and sealed by Humayoun Farooq, P.E.*

B. TESTS

1. *Test report on Large Missile Impact Test, Cyclic Wind Pressure Test, and Uniform Static Air Pressure Test of "Accordion Shutter", prepared by Fenestration Testing Laboratory, Inc., Report No. 5389-34, dated March 29, 2008, signed and sealed by Michael Wenzel, P.E.*

C. CALCULATIONS

1. *Comparative analysis and anchor calculation dated June 19, 2008, Sheets S-1 through S-4, B-1 through B-6, A-1 through A-33, AP-1 through AP-17, C-1 through C-18, & T-1 through T-14, prepared by Al-Farooq Corporation, signed and sealed by Humayoun Farooq, P.E.*

D. QUALITY ASSURANCE

1. *By Miami-Dade County Building Code Compliance Office.*

E. MATERIAL CERTIFICATIONS

1. *Extrusion Die Drawings by R C Aluminum Industries.*
2. *Certified Tensile Test Report prepared by Fenestration Testing Laboratory, Inc., Report No. 5389-34, dated March 29, 2008, signed and sealed by Michael Wenzel, P.E.*

F. STATEMENTS

1. *Letter by Al-Farooq Corporation, dated June 19, 2008, signed and sealed by Humayoun Farooq, P.E., certifying that this product is in compliance with FBC 2004/2007.*

Helmy A. Makar, P.E., M.S.
Product Control Examiner
NOA No. 08-1008.05
Expiration Date: 03/18/2014
Approval Date: 03/18/2009

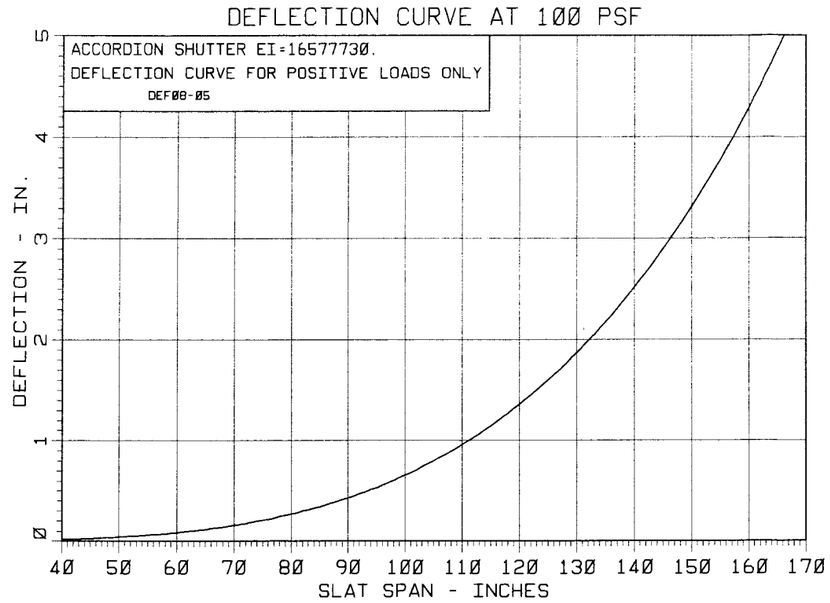

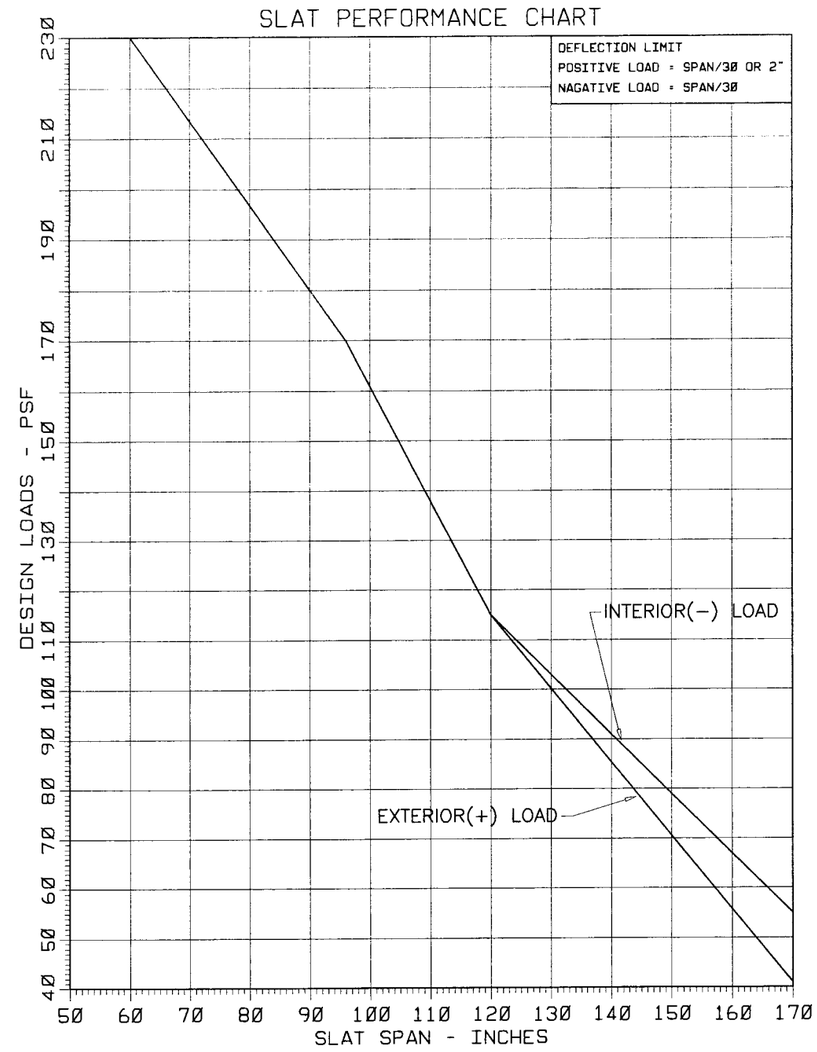

MINIMUM SEPARATION FROM GLASS			
SEPARATION REQD. DUE TO WIND LOAD		SEPARATION REQD. DUE TO LARGE MISSILE IMPACT	
		FOR SLAT SPANS UPTO	SEPARATION
SHUTTER SPAN = H =	IN.		
DESIGN LOAD = Pd =	PSF		
FACTOR = K = Pd/100 =	IN.		
READING FROM SPAN D. CURVE = D =	IN.	96"	2"
DEFLECTION AT Pd = K*D =	IN.	120"	3"
MIN. SEPARATION REQD. = K*D+1" =	IN.	170"	3-1/2"

FOR INSTALLATIONS UPTO 30' OF GRADE USE MAXIMUM OF WIND LOAD OR IMPACT LOAD REQUIREMENTS SHOWN ABOVE

FOR INSTALLATIONS ABOVE 30' OF GRADE IGNORE LARGE MISSILE IMPACT REQUIREMENT.

NOTE: NO PART OF SHUTTER SHALL BE UNDER 30' ABOVE GRADE TO WAIVE LARGE MISSILE IMPACT REQUIREMENT.

USE SLAT PERFORMANCE CHART TO VERIFY SLAT CAPACITY FOR THE REQUIRED DESIGN LOAD FOR THE PARTICULAR LOCATION.

DESIGN LOADS SHALL BE CALCULATED AS PER REQUIREMENTS OF ASCE 7-02/04.

GENERAL NOTES

1. THIS PRODUCT HAS BEEN DESIGNED AND TESTED TO COMPLY WITH THE REQUIREMENTS OF THE FLORIDA BUILDING CODE 2004/2007 EDITION INCLUDING HIGH VELOCITY HURRICANE ZONE (HVHZ).
2. DESIGN CRITERIA FOR ALUMINUM, MINIMUM MECHANICAL PROPERTIES, AND SAFETY FACTORS ARE IN ACCORDANCE WITH THE "ALUMINUM CONSTRUCTION MANUAL" LATEST EDITION.
3. ALUMINUM ALLOYS: ALL EXTRUSIONS SHALL BE ALLOY AS SHOWN .
4. STEEL SURFACES TO BE PLACED IN CONTACT WITH ALUMINUM SHALL BE GIVEN ONE COAT OF ZINC CHROMATE PRIMER IN ACCORDANCE WITH FEDERAL SPEC. NO. TTP-645, OR BE GALVANIZED.
5. ANCHORS SHALL BE AS SHOWN ON DETAILS. ANCHOR EMBEDMENT TO BASE MATERIAL SHALL BE BEYOND WALL DRESSING OR STUCCO.
6. ALL BOLTS SHALL BE STAINLESS STEEL, ALUMINUM ALLOY 2024-T4 OR 7075-T6, OR PLATED STEEL. WING NUTS TO BE OF ZINC ALLOY.
7. DESIGN CRITERIA FOR SLATS: MAX DEFLECTION $\leq$ THE LESSER OF L/30 OR 2".
8. ANCHORING OR LOADING CONDITIONS OTHER THAN THOSE SHOWN IN THESE DETAILS ARE NOT PART OF THIS APPROVAL.
9. A LOAD DURATION INCREASE IN ALLOWABLE STRESS IS USED IN DESIGN OF ANCHORS INTO WOOD ONLY.

PRODUCT MARKING

A LABEL SHALL BE AFFIXED ON LOCKING MEMBER OF UNIT ABOVE LOCK WITH THE FOLLOWING STATEMENT.

R.C. ALUMINUM SHUTTERS INC., MIAMI, FL.

'MIAMI-DADE COUNTY PRODUCT CONTROL APPROVED'

Engr: DR. HUMAYOUN FAROOQ
STRUCTURES
FLA. PE # 16557
C.A.N. 3538

JAN 30 2009

Approved as complying with the Florida Buiding Code
Date 03/18/2009
NOA# 08-1008.05
Miami Dade Product Control Division
By

AL-FAROOQ CORPORATION
ENGINEERS & PRODUCT DEVELOPMENT
1235 S.W. 87 AVE
MIAMI, FLORIDA 33174
TEL. (305) 264-8100 FAX. (305) 262-6978

ACCORDION/08-05RC

AS-600 ADVANCED ALUM ACCORDION SHUTTER

R.C. ALUMINUM SHUTTERS, INC.
2805 N.W. 75 TH AVE.
MIAMI, FL. 33122
TEL. (305) 592-1515 FAX. (305) 592-2184

revisions:			
no	date	by	description
A	01.22.09		NO CHANGE THIS SHEET

date: 05-08-08
scale: 1/2" = 1"
dr. by: HAMID
chk. by:

drawing no.
08-05

sheet 1 of 7

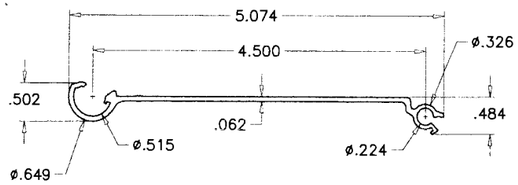

SELF MATE SLAT
6005-T5
AS600-006

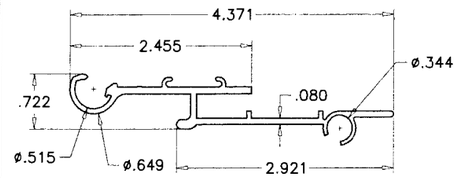

FEMALE LOCKING SLAT
6005-T5
AS600-005

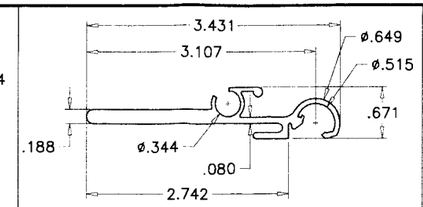

MALE LOCKING SLAT
6005-T5
AS600-004

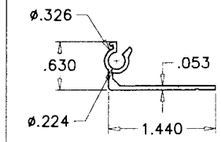

END SLAT
6005-T5
AS500-004

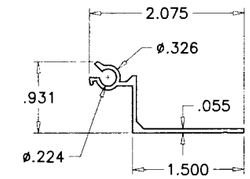

90° END SLAT
6005-T5
AS500-005

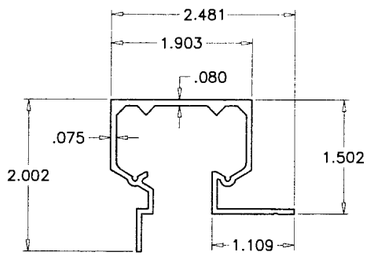

CEILING HEADER
6005-T5
AS500-008

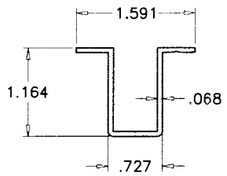

FLOOR SILL EMBEDED
6005-T5
AS500-012

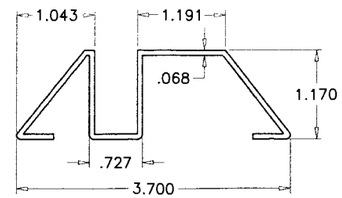

THRESHOLD TRACK
6005-T5
AS500-013

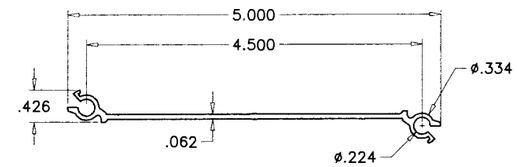

MALE & MALE SLAT
6005-T5
AS600-007

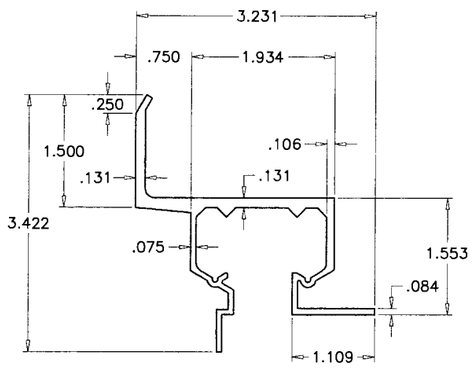

BUILT-OUT WALL HEADER
6005-T5
AS600-001

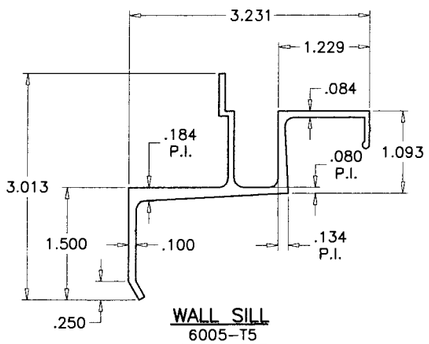

WALL SILL
6005-T5
AS600-003

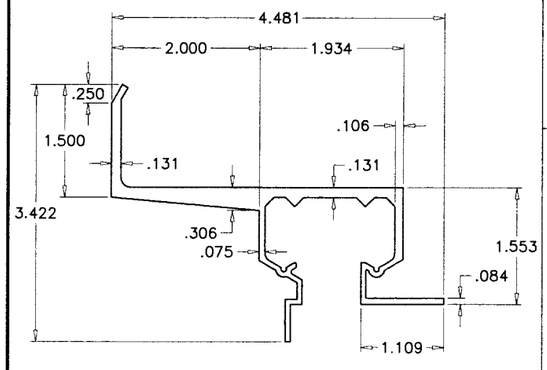

2" BUILT-OUT WALL HEADER
6005-T5
AS600-002

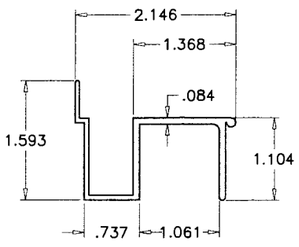

FLOOR SILL
6005-T5
AS600-008

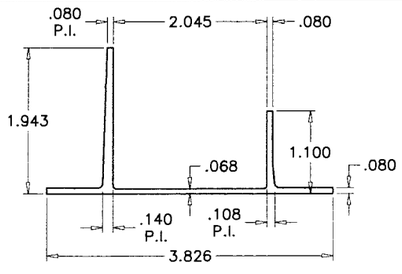

ADJUSTABLE SILL ADAPTER
6005-T5
AS600-009

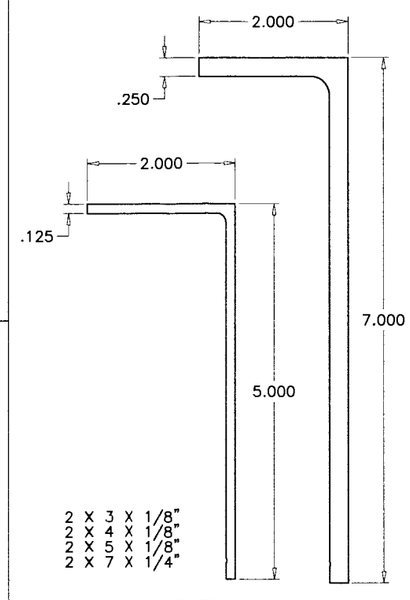

BUILT-OUT ANGLES
6063-T5

Approved as complying with the Florida Building Code
Date 03/18/2009
NOA# 08-1008.05
Miami Dade Product Control Division
By

Engr: DR. HUMAYOUN FAROOQ
STRUCTURES
FLA. PE # 16557
C.A.N. 3538

JAN 30 2009

AL-FAROOQ CORPORATION
ENGINEERS & PRODUCT DEVELOPMENT
1235 S.W. 87 AVE
MIAMI, FLORIDA 33174
TEL. (305) 264-8100 FAX. (305) 262-6978

ACCORDION/08-05RC

AS-600 ADVANCED ALUM ACCORDION SHUTTER

R.C. ALUMINUM SHUTTERS, INC.
2805 N.W. 75 TH AVE.
MIAMI, FL. 33122
TEL. (305) 592-1515 FAX. (305) 592-2184

revisions:			
no	date	by	description
A	01.22.09		REV. PER BCCO COMMENTS

date: 05-08-08
scale: 1/2" = 1"
dr. by: HAMID
chk. by:

drawing no. 08-05

WALL MOUNTS

ANCHOR TYPE	CHART TO USE CONC.	BLOCK	WOOD	METAL
A	2	1	–	–
B	3	1	–	–
C	3	2	–	–
D	3	1	–	–
E	–	–	3	–
G	–	–	–	1

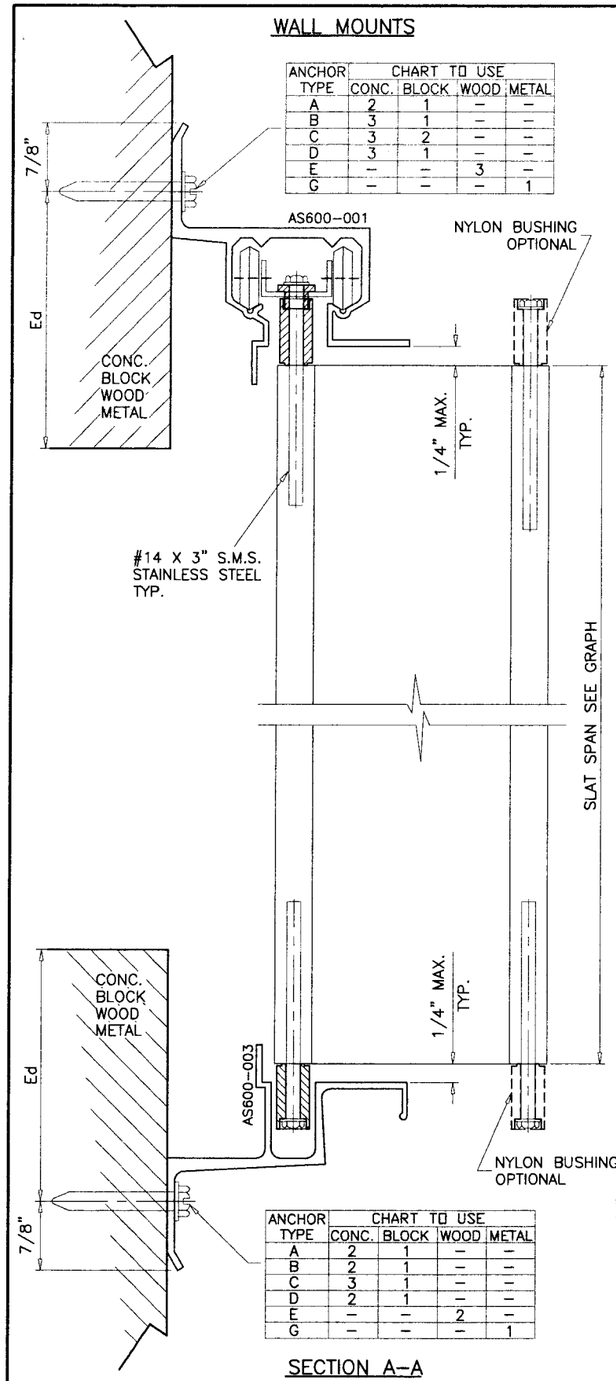

ANCHOR TYPE	CHART TO USE CONC.	BLOCK	WOOD	METAL
A	2	1	–	–
B	2	1	–	–
C	3	1	–	–
D	2	1	–	–
E	–	–	2	–
G	–	–	–	1

SECTION A–A

ALT. WALL MOUNTS

ANCHOR TYPE	CHART TO USE CONC.	BLOCK	WOOD	METAL
A	2	1	–	–
B	3	1	–	–
C	3	2	–	–
D	3	1	–	–
E	–	–	3	–
G	–	–	–	1

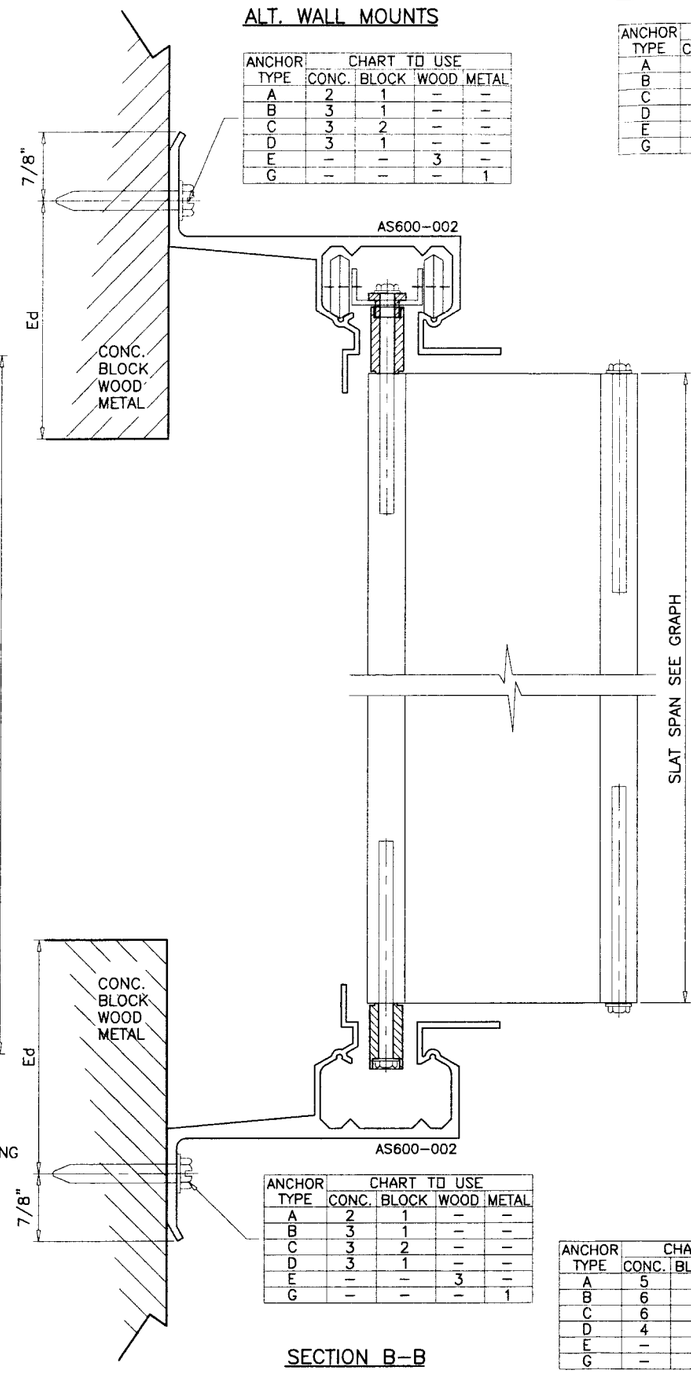

ANCHOR TYPE	CHART TO USE CONC.	BLOCK	WOOD	METAL
A	2	1	–	–
B	3	1	–	–
C	3	2	–	–
D	3	1	–	–
E	–	–	3	–
G	–	–	–	1

SECTION B–B

INSIDE MOUNTS

ANCHOR TYPE	CHART TO USE CONC.	BLOCK	WOOD	METAL
A	3	2	–	–
B	4	2	–	–
C	4	2	–	–
D	3	1	–	–
E	–	–	2	–
G	–	–	–	2

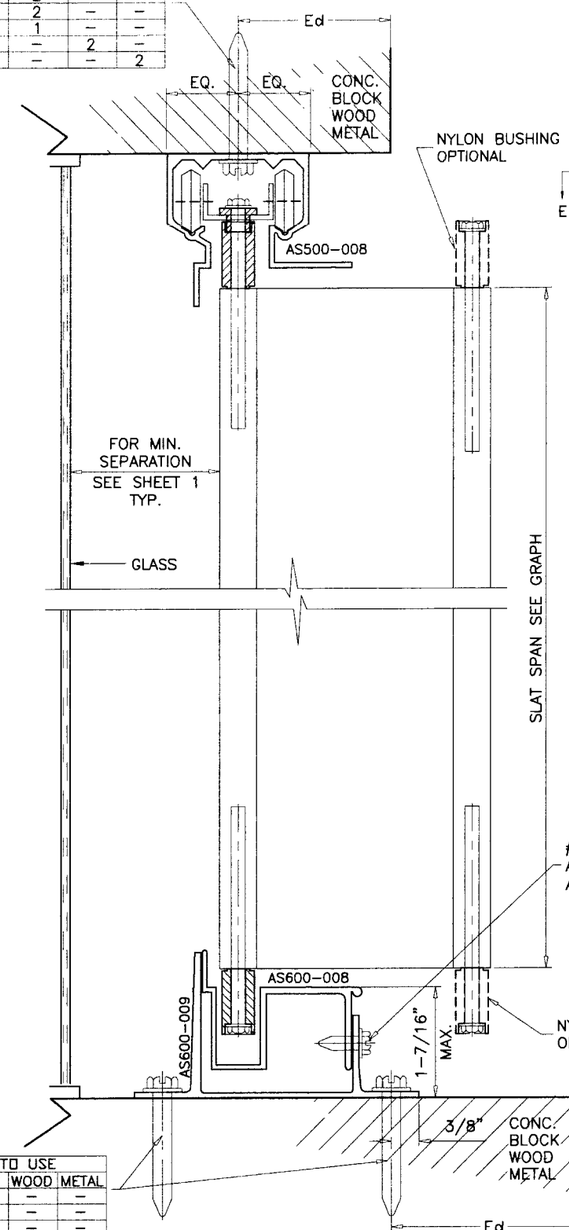

ANCHOR TYPE	CHART TO USE CONC.	BLOCK	WOOD	METAL
A	5	4	–	–
B	6	3	–	–
C	6	4	–	–
D	4	3	–	–
E	–	–	4	–
G	–	–	–	4

SECTION C–C

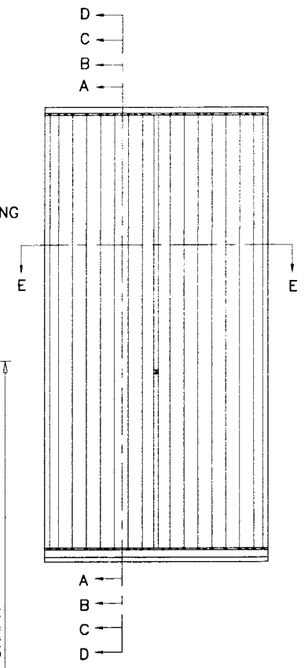

TYPICAL ELEVATION

Approved as complying with the Florida Building Code
Date 03/18/2009
NOA# 08-1008.05
Miami Dade Product Control Division
By

Engr: DR. HUMAYOUN FAROOQ
STRUCTURES
FLA. PE # 16557
C.A.N. 3538

JAN 30 2009

ANCHORS: EMBEDMENT & EDGE DISTANCES SHOWN ARE BEYOND THE WALL & FLOOR COVERING (STUCCO, TILES, ETC.)

HEADER AND SILL DETAILS CAN BE USED IN ANY COMBINATIONS.

FOR GENERAL NOTES AND EXTRUSION DETAILS SEE SHEET 1 OF 7.
FOR WOOD INSTALLATIONS SEE SHEET 6 OF 7.
FOR ANCHOR CHARTS SEE SHEET 7 OF 7.

Ed = TYPICAL EDGE DISTANCE
CONC. & BLOCK = 12d (12 ANCHOR DIAMETERS)
WOOD = 5d
FOR LESSER EDGE DISTANCES SEE SHEET 7 OF 7.

AL-FAROOQ CORPORATION
ENGINEERS & PRODUCT DEVELOPMENT
1235 S.W. 87 AVE
MIAMI, FLORIDA 33174
TEL. (305) 264-8100 FAX. (305) 262-6978

ACCORDION/08-05RC

AS-600 ADVANCED ALUM ACCORDION SHUTTER

R.C. ALUMINUM SHUTTERS, INC.
2805 N.W. 75 TH AVE.
MIAMI, FL. 33122
TEL. (305) 592-1515 FAX. (305) 592-2184

revisions: no	date	by	description
A	01.22.09		NO CHANGE THIS SHEET

date: 05-08-08
scale: 1/2" = 1"
dr. by: HAMID
chk. by:

drawing no. 08-05

BUILT-OUT CONDITION

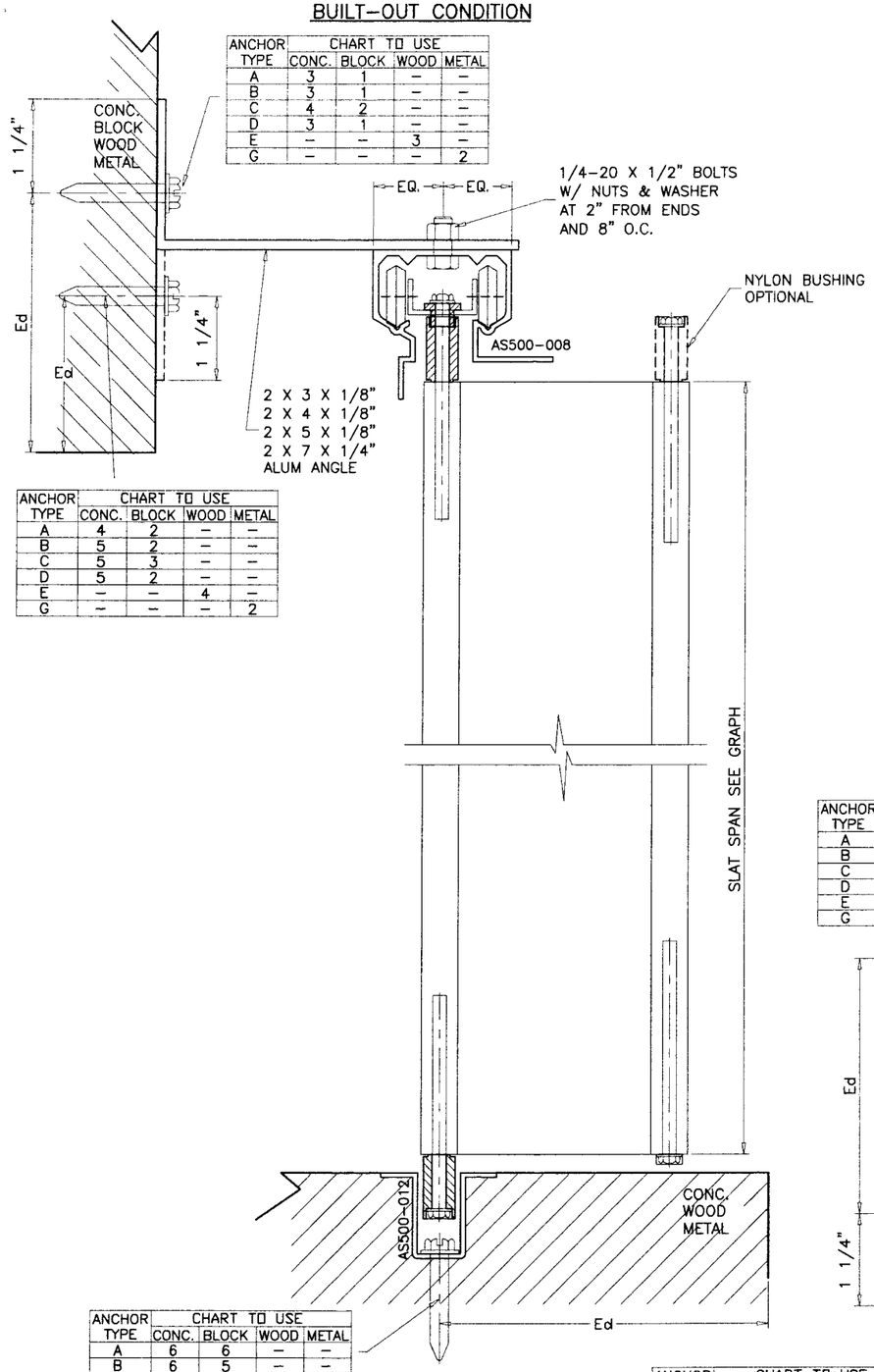

ANCHOR TYPE	CHART TO USE			
	CONC.	BLOCK	WOOD	METAL
A	3	1	–	–
B	3	1	–	–
C	4	2	–	–
D	3	1	–	–
E	–	–	3	–
G	–	–	–	2

ANCHOR TYPE	CHART TO USE			
	CONC.	BLOCK	WOOD	METAL
A	4	2	–	–
B	5	2	–	–
C	5	3	–	–
D	5	2	–	–
E	–	–	4	–
G	–	–	–	2

ANCHOR TYPE	CHART TO USE			
	CONC.	BLOCK	WOOD	METAL
A	6	6	–	–
B	6	5	–	–
C	6	5	–	–
D	5	4	–	–
E	–	–	4	–
G	–	–	–	6

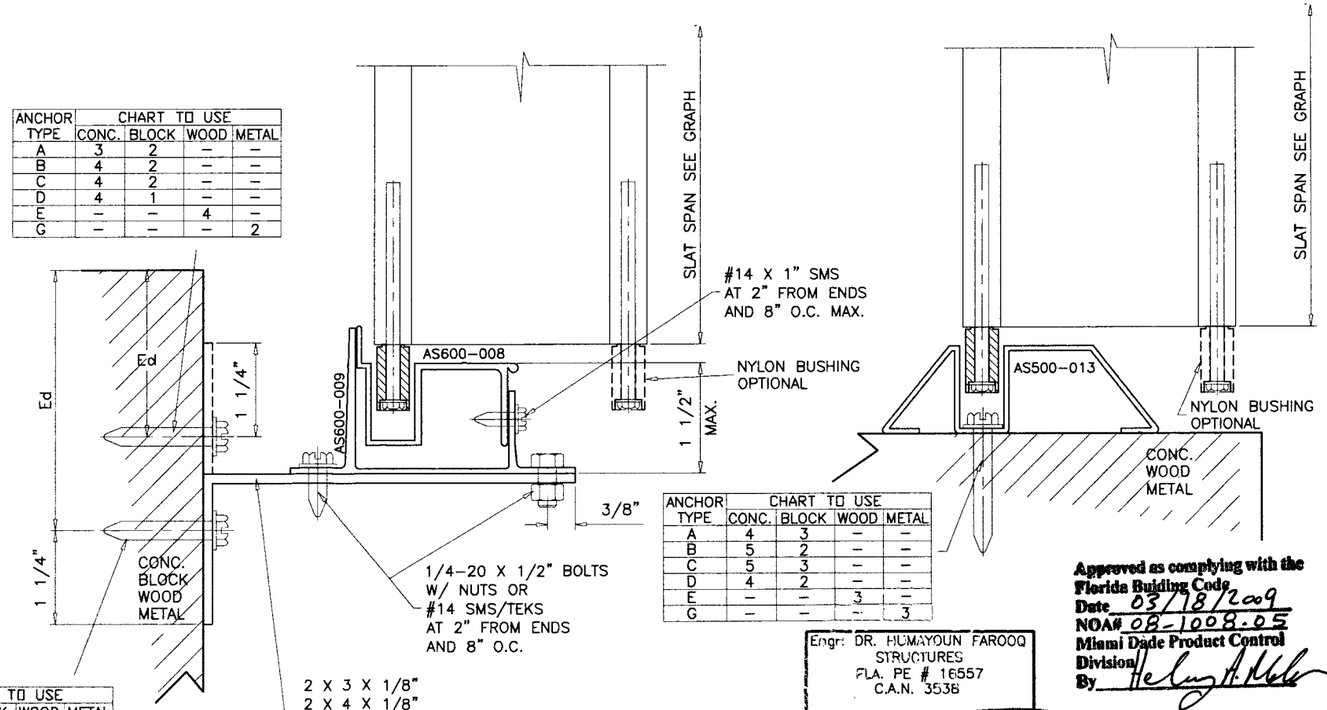

ANCHOR TYPE	CHART TO USE			
	CONC.	BLOCK	WOOD	METAL
A	3	2	–	–
B	4	2	–	–
C	4	2	–	–
D	4	1	–	–
E	–	–	4	–
G	–	–	–	2

ANCHOR TYPE	CHART TO USE			
	CONC.	BLOCK	WOOD	METAL
A	3	1	–	–
B	3	1	–	–
C	3	2	–	–
D	3	1	–	–
E	–	–	3	–
G	–	–	–	1

ANCHOR TYPE	CHART TO USE			
	CONC.	BLOCK	WOOD	METAL
A	4	3	–	–
B	5	2	–	–
C	5	3	–	–
D	4	2	–	–
E	–	–	3	–
G	–	–	–	3

Engr: DR. HUMAYOUN FAROOQ
STRUCTURES
FLA. PE # 16557
C.A.N. 3538

JAN 30 2009

Approved as complying with the Florida Building Code
Date 03/18/2009
NOA# 08-1008.05
Miami Dade Product Control Division
By

AL-FAROOQ CORPORATION
ENGINEERS & PRODUCT DEVELOPMENT
1235 S.W. 87 AVE
MIAMI, FLORIDA 33174
TEL. (305) 264-8100 FAX. (305) 262-6978

ACCORDION/08-05RC

AS-600 ADVANCED ALUM ACCORDION SHUTTER

R.C. ALUMINUM SHUTTERS, INC.
2805 N.W. 75 TH AVE.
MIAMI, FL. 33122
TEL. (305) 592-1515 FAX. (305) 592-2184

revisions:

no	date	by	description
A	01.22.09		REV. PER BCCO COMMENTS

date: 05-08-08
scale: 1/2" = 1"
dr. by: HAMID
chk. by:

drawing no.
08-05

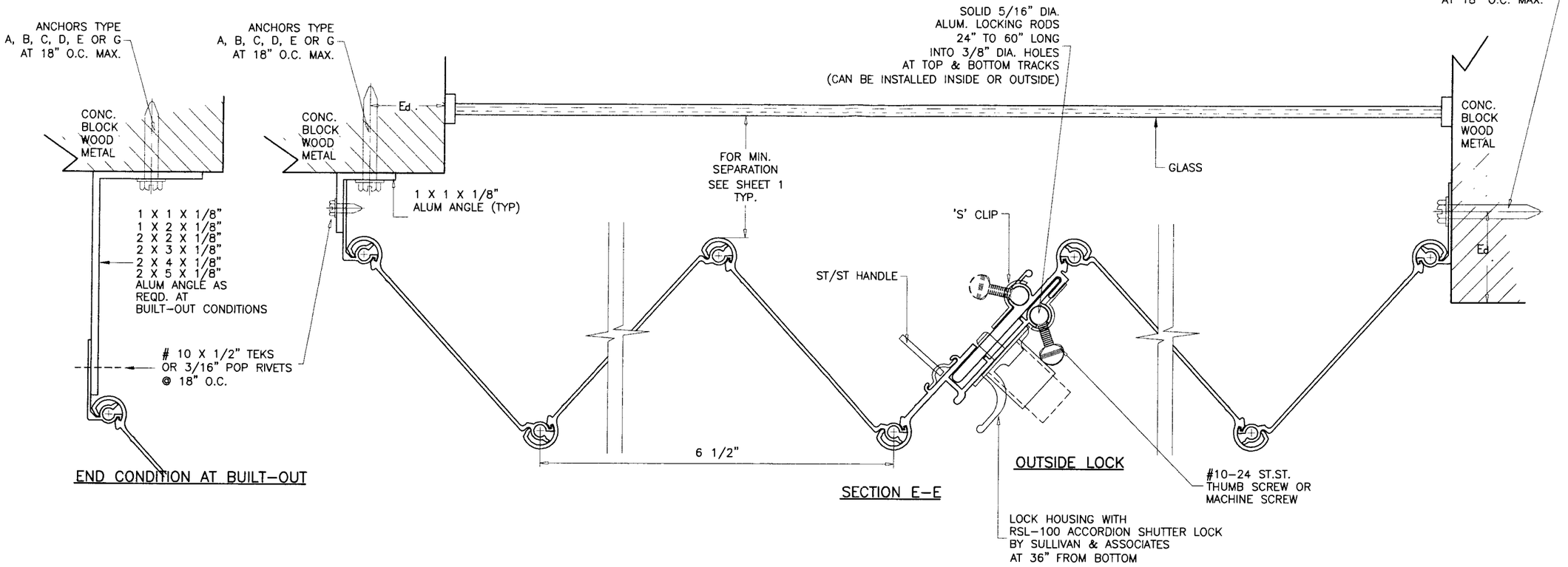

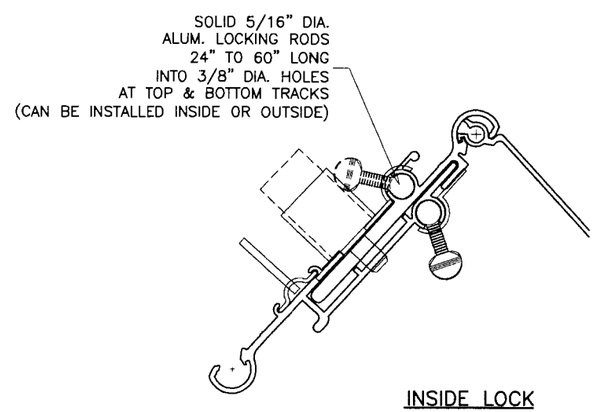

INSIDE LOCK

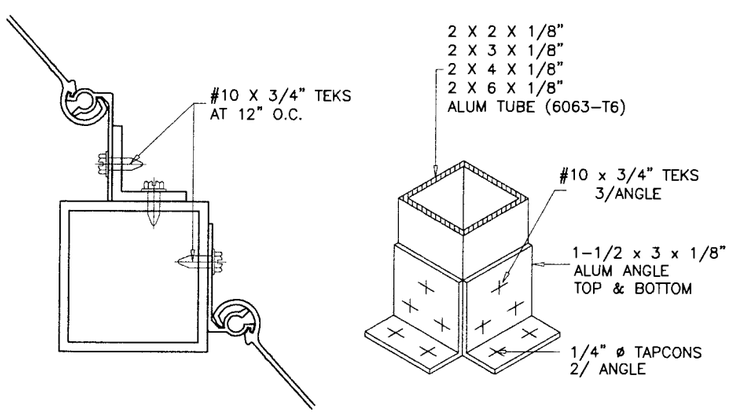

FIXED CORNER DETAIL

Approved as complying with the
Florida Building Code
Date 03/18/2009
NOA# 08-1008.05
Miami Dade Product Control
Division
By

Engr: DR. HUMAYOUN FAROOQ
STRUCTURES
FLA. PE # 16557
C.A.N. 3538

JAN 30 2009

AL-FAROOQ CORPORATION
ENGINEERS & PRODUCT DEVELOPMENT
1235 S.W. 87 AVE
MIAMI, FLORIDA 33174
TEL. (305) 264-8100 FAX. (305) 262-6978

ACCORDION/08-05RC

AS-600 ADVANCED ALUM ACCORDION SHUTTER

R.C. ALUMINUM SHUTTERS, INC.
2805 N.W. 75 TH AVE.
MIAMI, FL. 33122
TEL. (305) 592-1515 FAX. (305) 592-2184

revisions:

no	date	by	description
A	01.22.09		REV. PER BCCO COMMENTS

date: 05-08-08
scale: 1/2" = 1"
dr. by: HAMID
chk. by:

drawing no.
08-05

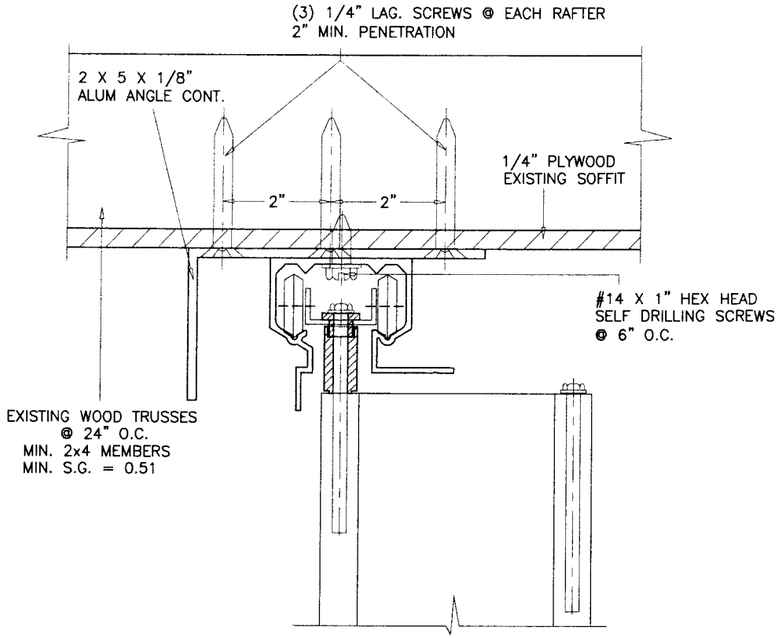

HEADER CONNECTION TO WOOD TRUSSES

FOR SHUTTER HEIGHT OF 84" MAX. DESIGN LOAD = 84 PSF
FOR SHUTTER HEIGHT OF 96" MAX. DESIGN LOAD = 74 PSF
FOR SHUTTER HEIGHT OF 108" MAX. DESIGN LOAD = 65 PSF

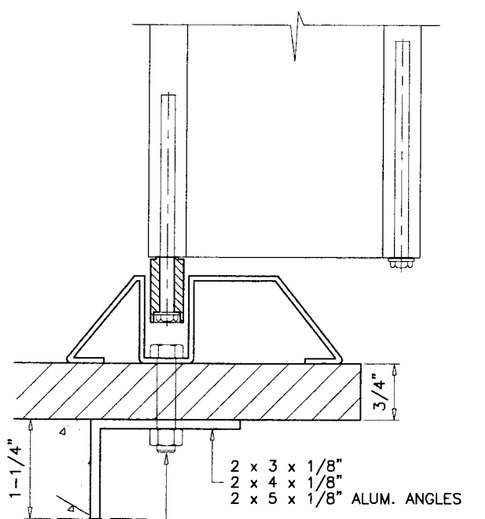

COUNTER TOP CONDITION

(PASS THRU WINDOW)
MAX SHUTTER HEIGHT = 6 FT.

ANCHOR TYPE	ANCHOR SPACING INCHES											
	UPTO 50 PSF				UPTO 60 PSF				UPTO 65 PSF			
	CONC	BLK.	WOOD	METAL	CONC	BLK.	WOOD	METAL	CONC	BLK.	WOOD	METAL
A	8	5	–	–	8	4.1	–	–	7.6	3.8	–	–
B	8	4.8	–	–	8	4	–	–	8	3.7	–	–
C	8	6.5	–	–	8	5.4	–	–	8	5	–	–
E	–	–	8	–	–	–	8	–	–	–	8	–
G	–	–	–	6.8	–	–	–	5.7	–	–	–	5.3

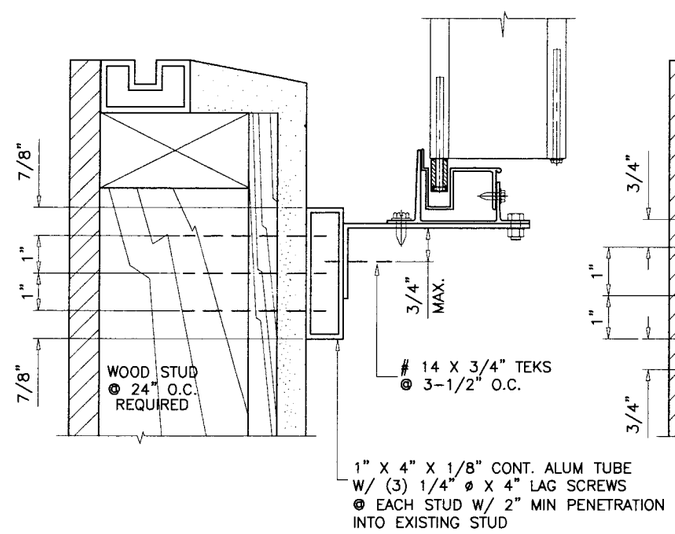

FOR SHUTTER HEIGHT OF 84" MAX. DESIGN LOAD = 85 PSF
FOR SHUTTER HEIGHT OF 96" MAX. DESIGN LOAD = 74 PSF
FOR SHUTTER HEIGHT OF 108" MAX. DESIGN LOAD = 66 PSF
FOR SHUTTER HEIGHT OF 120" MAX. DESIGN LOAD = 59 PSF

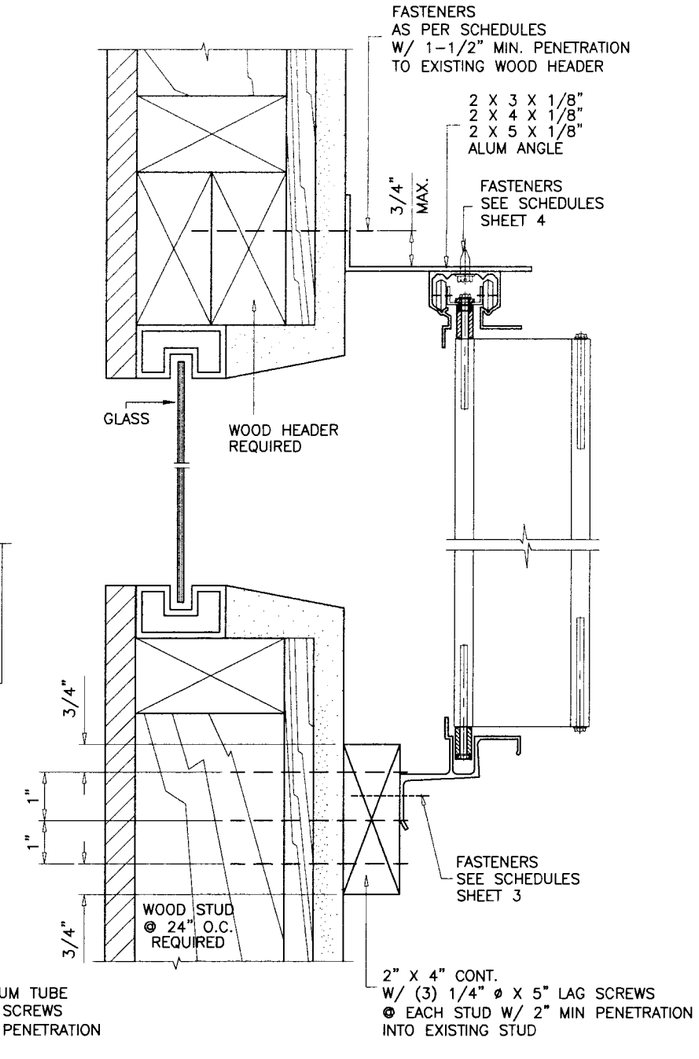

FOR SHUTTER HEIGHT OF 84" MAX. DESIGN LOAD = 96 PSF
FOR SHUTTER HEIGHT OF 96" MAX. DESIGN LOAD = 84 PSF
FOR SHUTTER HEIGHT OF 108" MAX. DESIGN LOAD = 75 PSF
FOR SHUTTER HEIGHT OF 120" MAX. DESIGN LOAD = 67 PSF

INSTALLATION DETAIL ON EXISTING WOOD BUCKS SCALE : 1/4"=1"

ABOVE DETAILS SHOWS CONNECTION OF 2X4 BUCK & 1X4 ALUM TUBE TO WOOD STUDS TO PROVIDE A CONTINUOUS SURFACE FOR SHUTTER INSTALLATION.

FOR INSTALLATION DETAILS OF HEADER/SILL TO CONTINUOUS WOOD MEMBERS SEE SHEETS 3 THRU 4.

Engr: DR. HUMAYOUN. FAROOQ
STRUCTURES
FLA. PE # 16557
C.A.N. 3538

JAN 30 2009

Approved as complying with the Florida Building Code
Date 03/18/2009
NOA# 08-1008.05
Miami Dade Product Control Division
By

AL-FAROOQ CORPORATION
ENGINEERS & PRODUCT DEVELOPMENT
1235 S.W. 87 AVE
MIAMI, FLORIDA 33174
TEL. (305) 264-8100 FAX. (305) 262-6978

ACCORDION/08-05RC

AS-600 ADVANCED ALUM ACCORDION SHUTTER

R.C. ALUMINUM SHUTTERS, INC.
2805 N.W. 75 TH AVE.
MIAMI, FL. 33122
TEL. (305) 592-1515 FAX. (305) 592-2184

revisions:			
no	date	by	description
A	01.22.09		NO CHANGE THIS SHEET

date: 05-08-08
scale: 1/2" = 1"
dr. by: HAMID
chk. by:

drawing no.
08-05

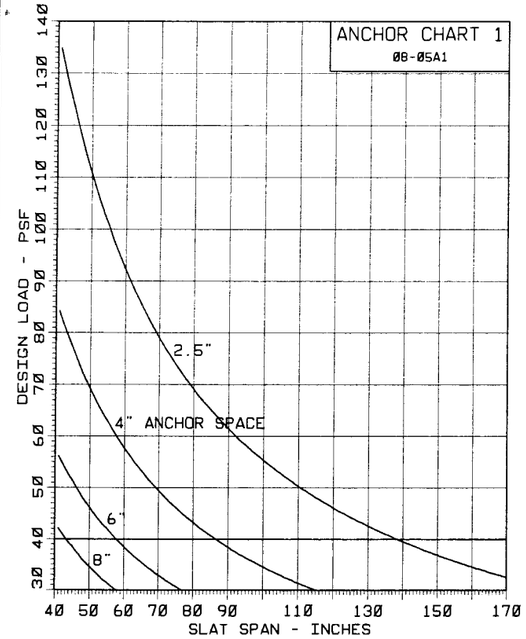

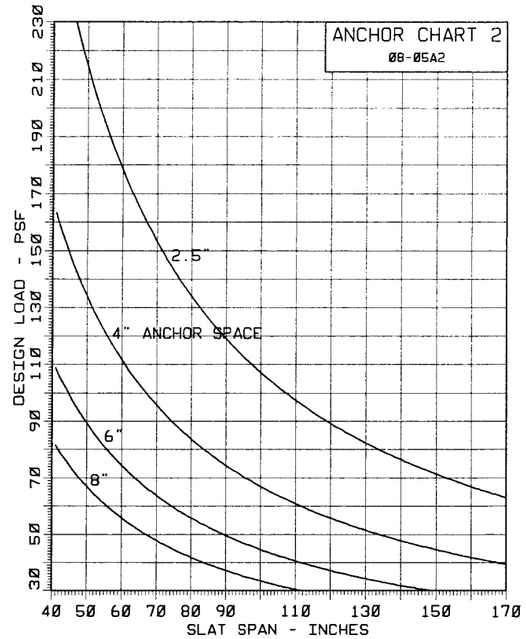

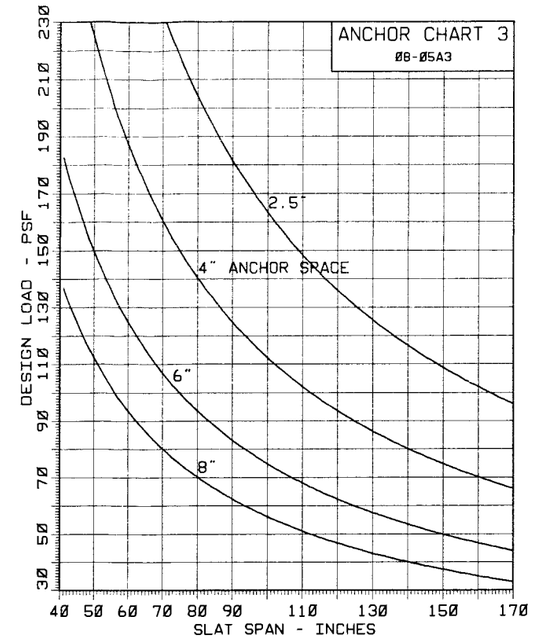

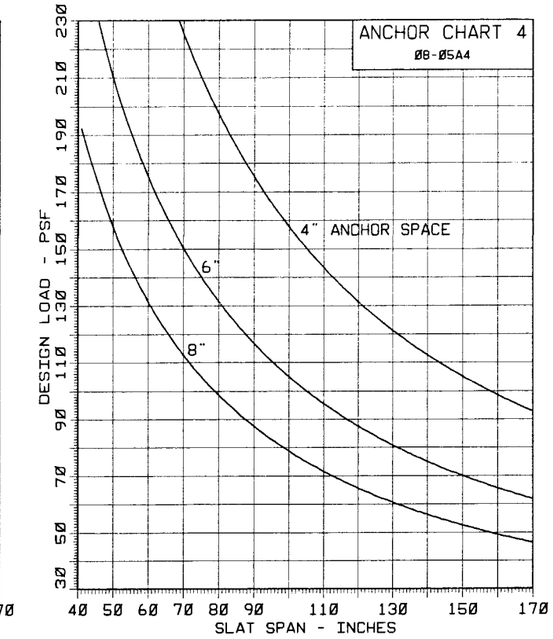

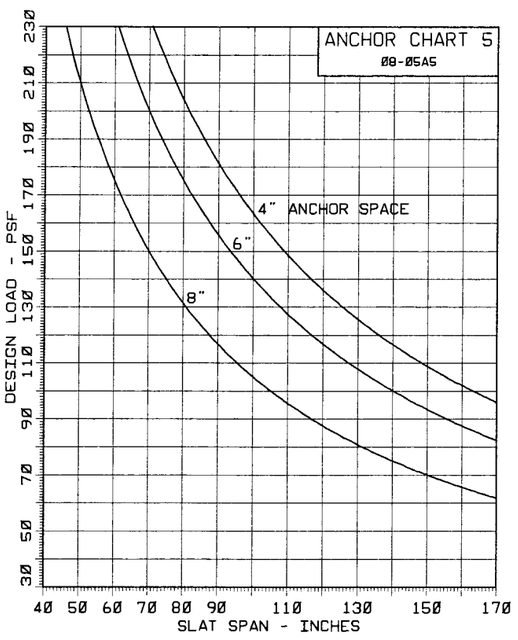

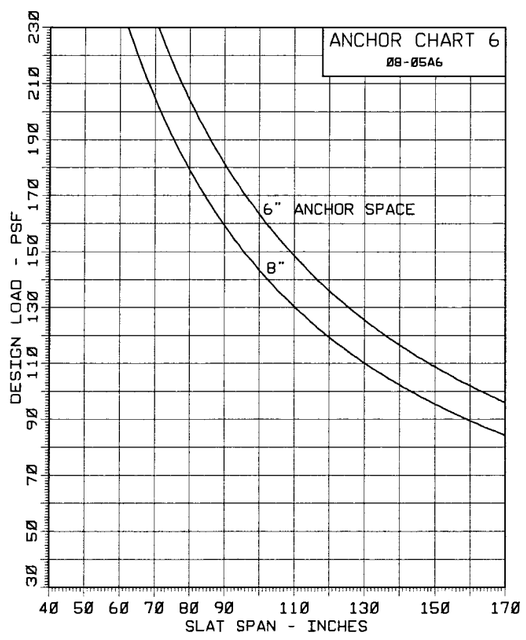

TYPICAL ANCHORS:

ANCHOR (A) = 1/4" DIA. ULTRACON (BY ELCO)
1-3/4" EMBEDMENT INTO 3000 PSI CONC.
1-1/4" EMBEDMENT INTO C-90 BLOCK

ANCHOR (B) = 1/4" DIA. KWIKCON II (BY HILTI)
1-3/4" EMBEDMENT INTO 3000 PSI CONC.
1-1/4" EMBEDMENT INTO C-90 BLOCK

ANCHOR (C) 5/16" DIA. ULTRACON (BY ELCO)
1-3/4" EMBEDMENT INTO 3000 PSI CONC.
1-1/4" EMBEDMENT INTO C-90 BLOCK

ANCHOR (D) = 1/4" RAWL CALK-IN
TOTAL ANCHOR BODY INTO 3000 PSI CONC.
OR C-90 BLOCK

ANCHOR (E) = 1/4" DIA. LAG SCREWS
1-1/2" MIN PENETRATION INTO WOOD(S.G.=0.55)

ANCHOR (G) = 1/4" DIA. KWIK-FLEX SELF DRILLING SCREWS
INTO METAL STRUCTURES
(STEEL OR ALUMINUM 1/8" MIN. THICK.)

NOTE: ANCHORS EMBEDMENT SHOWN IS BEYOND WALL & FLOOR COVERINGS (STUCCO, TILES, ETC.)

FASTENER SPACING IN MASONRY/CONCRETE

CHARTS ARE BASED ON TYPICAL EDGE DISTANCE = 12d.
FOR LESSER EDGE DISTANCE DECREASE SPACING BY MULTIPLYING WITH THE FACTOR BELOW

EDGE DIST.	12d=3"	10d=2-1/2"	8d=2"	6d=1-1/2"	5d=1-1/4"
FACTOR	1.00	0.86	0.71	0.57	0.50

EXAMPLE: FOR 3" EDGE DIST. SPACING = 8" O.C. (FROM CHART)
FOR 2" EDGE DIST. SPACING = 8 X .71 = 5.9 O.C.

TYPICAL EDGE DISTANCE IN WOOD = 3/4"
TYPICAL END DISTANCE IN WOOD = 1"
NO REDUCTION FACTOR IS REQUIRED

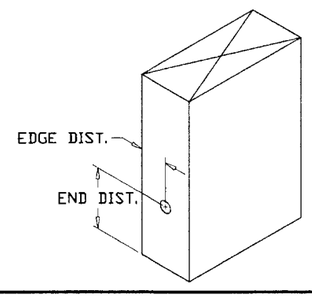

USE CHARTS 1 THRU 6 TO VERIFY ANCHOR REQUIREMENTS AND STRESS LIMITATIONS OF LOAD/SPAN COMBINATIONS FOR HEADER AND SILL.

Engr: DR. HUMAYOUN FAROOQ
STRUCTURES
FLA. PE # 16557
C.A.N. 3538

JAN 30 2009

Approved as complying with the Florida Building Code
Date 03/18/2009
NOA# 08-1008.05
Miami Dade Product Control Division
By

AL-FAROOQ CORPORATION
ENGINEERS & PRODUCT DEVELOPMENT
1235 S.W. 87 AVE
MIAMI, FLORIDA 33174
TEL. (305) 264-8100 FAX. (305) 262-6978

ACCORDION/08-05RC

AS-600 ADVANCED ALUM ACCORDION SHUTTER

R.C. ALUMINUM SHUTTERS, INC.
2805 N.W. 75 TH AVE.
MIAMI, FL. 33122
TEL. (305) 592-2184 FAX. (305) 592-2184

revisions:			
no	date	by	description
A	01.22.09		NO CHANGE THIS SHEET

date: 05-08-08
scale: 1/2" = 1"
dr. by: HAMID
chk. by:

drawing no. 08-05