MIAMI-DADE COUNTY
BUILDING CODE COMPLIANCE OFFICE (BCCO)
PRODUCT CONTROL DIVISION

MIAMI-DADE COUNTY, FLORIDA
METRO-DADE FLAGLER BUILDING
140 WEST FLAGLER STREET, SUITE 1603
MIAMI, FLORIDA 33130-1563
(305) 375-2901 FAX (305) 372-6339
www.maimidade.gov/buildingcode

NOTICE OF ACCEPTANCE (NOA)

Arch Aluminum & Glass Company, Inc.
10200 NW 67th Street
Tamarac, FL 33321

SCOPE:

This NOA is being issued under the applicable rules and regulations governing the use of construction materials. The documentation submitted has been reviewed by Miami-Dade County Product Control Division and accepted by the Board of Rules and Appeals (BORA) to be used in Miami Dade County and other areas where allowed by the Authority Having Jurisdiction (AHJ).

This NOA shall not be valid after the expiration date stated below. The Miami-Dade County Product Control Division (In Miami Dade County) and/or the AHJ (in areas other than Miami Dade County) reserve the right to have this product or material tested for quality assurance purposes. If this product or material fails to perform in the accepted manner, the manufacturer will incur the expense of such testing and the AHJ may immediately revoke, modify, or suspend the use of such product or material within their jurisdiction. BORA reserves the right to revoke this acceptance, if it is determined by Miami-Dade County Product Control Division that this product or material fails to meet the requirements of the applicable building code. This product is approved as described herein, and has been designed to comply with the Florida Building Code, including the High Velocity Hurricane Zone.

DESCRIPTION: Series "IFG 5100" Aluminum Storefront System – L.M.I.

APPROVAL DOCUMENT: Drawing No. **IFG 5100**, titled "Arch Aluminum and Glass Series IFG 5100 Storefront Wall", sheets 1 through 13 of 13, dated 9/9/08 with revision 1 dated 2/2/09, prepared by Bromley-Cook Engineering, Inc., signed and sealed by William D. Cook, P.E., bearing the Miami-Dade County Product Control Approval stamp with the Notice of Acceptance number and approval date by the Miami-Dade County Product Control Division.

MISSILE IMPACT RATING: Large Missile Impact Resistant

LABELING: Each unit shall bear a permanent label with the manufacturer's name or logo, city, state and following statement: "Miami-Dade County Product Control Approved", unless otherwise noted herein.

RENEWAL of this NOA shall be considered after a renewal application has been filed and there has been no change in the applicable building code negatively affecting the performance of this product.

TERMINATION of this NOA will occur after the expiration date or if there has been a revision or change in the materials, use, and/or manufacture of the product or process. Misuse of this NOA as an endorsement of any product, for sales, advertising or any other purposes shall automatically terminate this NOA. Failure to comply with any section of this NOA shall be cause for termination and removal of NOA.

ADVERTISEMENT: The NOA number preceded by the words Miami-Dade County, Florida, and followed by the expiration date may be displayed in advertising literature. If any portion of the NOA is displayed, then it shall be done in its entirety.

INSPECTION: A copy of this entire NOA shall be provided to the user by the manufacturer or its distributors and shall be available for inspection at the job site at the request of the Building Official.

This NOA consists of this page 1 and evidence pages E-1 and E-2, as well as approval document mentioned above.

The submitted documentation was reviewed by **Manuel Perez, P.E.**

MIAMI-DADE COUNTY APPROVED

Arch Aluminum & Glass Company, Inc.

NOTICE OF ACCEPTANCE: EVIDENCE SUBMITTED

A. DRAWINGS

1. Manufacturer's die drawings and sections.
2. Drawing No **IFG 5100**, Sheets 1 through 13 of 13, titled "Arch Aluminum and Glass Series IFG 5100 Storefront Wall", dated 9/9/08 with revision 1 dated 2/2/09, prepared by Bromley Cook Engineering, Inc., signed and sealed by William D. Cook, P.E.

B. TESTS

1. Test reports on: 1) Uniform Static Air Pressure Test, Loading per FBC TAS 202-94
   2) Large Missile Impact Test per FBC, TAS 201-94
   3) Cyclic Wind Pressure Loading per FBC, TAS 203-94

   along with marked-up drawings and installation diagram of a series IFG 5100 aluminum storefront system, prepared by Fenestration Testing Laboratory, Inc., Test Report No. **FTL-5266**, dated 11/02/07, signed and sealed by Michael Wenzel, P.E.
2. Test reports on: 1) Uniform Static Air Pressure Test, Loading per FBC TAS 202-94
   2) Large Missile Impact Test per FBC, TAS 201-94
   3) Cyclic Wind Pressure Loading per FBC, TAS 203-94

   along with marked-up drawings and installation diagram of a series IFG 5100 aluminum storefront system, prepared by Fenestration Testing Laboratory, Inc., Test Report No. **FTL-5267**, dated 08/03/07, signed and sealed by Michael Wenzel, P.E.
3. Test reports on: 1) Air Infiltration Test, per FBC, TAS 202-94
   2) Uniform Static Air Pressure Test, Loading per FBC TAS 202-94
   3) Water Resistance Test, per FBC, TAS 202-94
   4) Large Missile Impact Test per FBC, TAS 201-94
   5) Cyclic Wind Pressure Loading per FBC, TAS 203-94

   along with marked-up drawings and installation diagram of a series IFG 5100 aluminum storefront system, prepared by Fenestration Testing Laboratory, Inc., Test Report No. **FTL-5268**, dated 11/14/07, signed and sealed by Carlos S. Rionda, P.E.

C. CALCULATIONS

1. Anchor verification calculations and structural analysis, complying with FBC-2004, prepared by Bromley-Cook Engineering, Inc., dated 02/03/09, signed and sealed by William D. Cook, P.E. **Complies with ASTM E1300-02**

D. QUALITY ASSURANCE

1. Miami Dade Building Code Compliance Office (BCCO).

Manuel Perez, P.E.
Product Control Examiner
NOA No. 08-1015.08
Expiration Date: March 11, 2014
Approval Date: March 11, 2009

E. MATERIAL CERTIFICATIONS

1. Notice of Acceptance No. **07-1116.04** issued to E.I. DuPont DeNemours & Co., Inc. for their "**DuPont SentryGlas ® Plus**" dated 01/03/08, expiring on 01/14/12.
2. Notice of Acceptance No. **08-0206.01** issued to Solutia Inc. for their "**Saflex HP Glass Interlayer**" dated 04/17/08, expiring on 04/14/13.

F. STATEMENTS

1. Statement letter of conformance, dated September 18, 2008, signed and sealed by William D. Cook, P.E.
2. Statement letter of no financial interest, dated September 18, 2008, signed and sealed by William D. Cook, P.E.
3. Laboratory compliance letter for Test Report No. **FTL-5266**, issued by Fenestration Testing Laboratory, Inc., dated 1/3/08, signed and sealed by Michael R. Wenzel, P.E.
4. Laboratory compliance letter for Test Report No. **FTL-5267**, issued by Fenestration Testing Laboratory, Inc., dated 2/25/08, signed and sealed by Michael R. Wenzel, P.E.
5. Laboratory compliance letter for Test Report No. **FTL-5268**, issued by Fenestration Testing Laboratory, Inc., dated 3/19/08, signed and sealed by Carlos S. Rionda, P.E.
6. **Proposal #07-2292**, verification test for Series **IFG 5100** storefront system, issued by BCCO on March 27, 2007, signed by Ishaq Chanda, P.E.

G. OTHER

1. None.

Manuel Perez, P.E.
Product Control Examiner
NOA No. 08-1015.08
Expiration Date: March 11, 2014
Approval Date: March 11, 2009

ARCH ALUMINUM SERIES IFG 5100 STOREFRONT SYSTEM – LARGE MISSILE

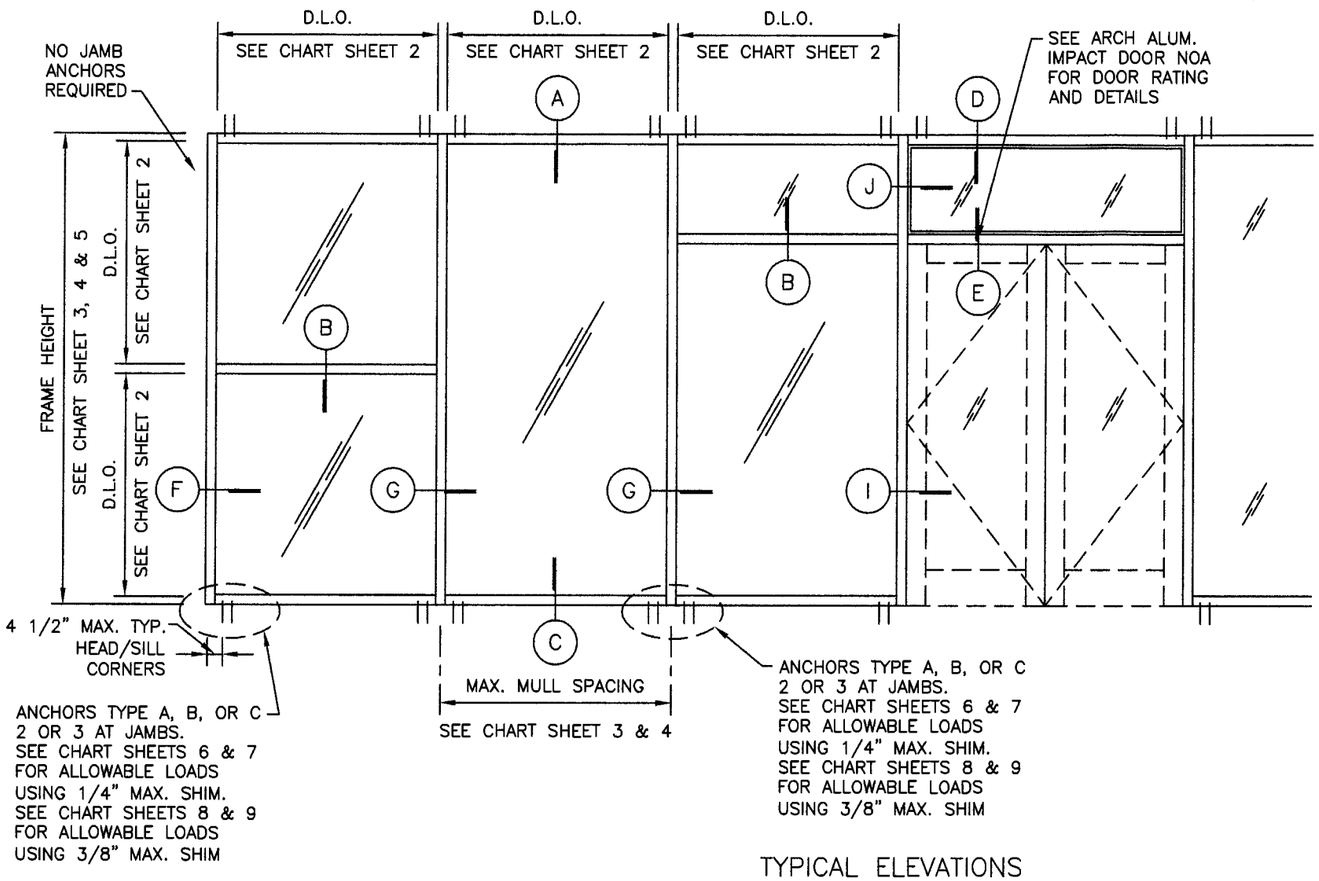

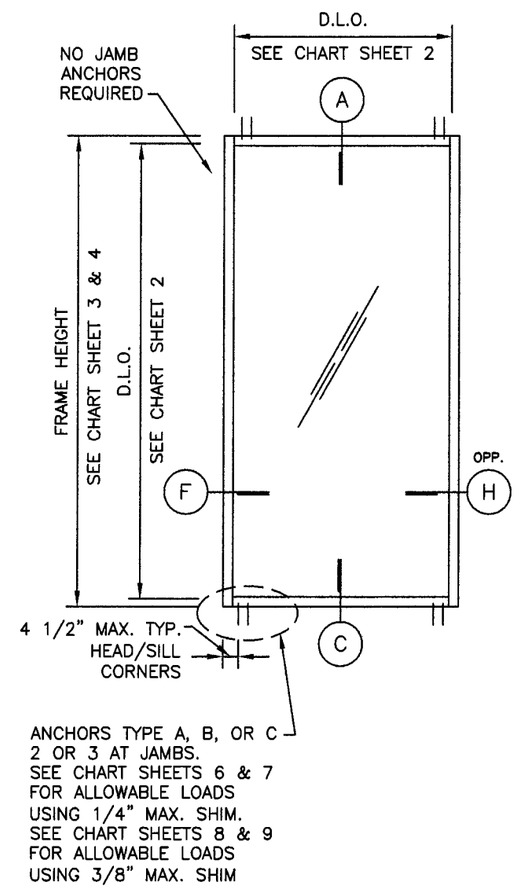

TYPICAL ELEVATIONS

SERIES IFG 5100 STOREFRONT SYSTEM

THIS SYSTEM IS RATED FOR LARGE MISSILE IMPACT. SHUTTERS ARE NOT REQUIRED.

CODE REQUIREMENTS FOR SAFEGUARDS MUST BE OBSERVED.

THIS PRODUCT HAS BEEN DESIGNED AND TESTED TO COMPLY WITH THE REQUIREMENTS OF THE FLORIDA BUILDING CODE 2007 EDITION INCLUDING HIGH VELOCITY HURRICANE ZONE.

WOOD BUCKS, BY OTHERS, MUST BE ANCHORED PROPERLY TO TRANSFER LOADS TO THE STRUCTURE.

ANCHORS SHALL BE AS LISTED AND SHOWN ON THE DETAILS. ANCHOR EMBEDMENT TO BASE MATERIAL SHALL BE BEYOND WALL DRESSING OR STUCCO.

ANCHORING OR LOADING CONDITIONS NOT SHOWN IN THESE DETAILS ARE NOT PART OF THIS APPROVAL.

A 33% INCREASE IN ALLOWABLE STRESS IS NOT USED IN THE DESIGN OF THIS SYSTEM.

ALL STEEL IN CONTACT WITH ALUMINUM TO BE PAINTED OR PLATED.

INSTRUCTIONS:

USE CHARTS AS FOLLOWS.

STEP 1: DETERMINE DESIGN WIND LOAD REQUIREMENTS BASED ON WIND VELOCITY, BLDG. HEIGHT, WIND ZONE USING APPLICABLE ASCE 7 STANDARD.

STEP 2: SEE CHARTS ON SHEET 2 FOR DESIGN LOAD CAPACITY OF DESIRED GLASS SIZE BASED ON APPLICABLE WIND DURATION.

STEP 3: CHECK MULLION AND JAMB CAPACITY FOR GIVEN SPACING AND HEIGHT USING CHARTS ON SHEET 3, 4 & 5. THE CAPACITY SHOULD EXCEED THE DESIGN LOAD.

STEP 4: USING CHART ON SHEET 6, 7, 8 & 9 SELECT ANCHOR OPTION WITH DESIGN RATING MORE THAN DESIGN LOAD SPECIFIED IN STEP 1 ABOVE.

STEP 5: THE LOWEST VALUE RESULTING FROM STEPS 2, 3 AND 4 SHALL APPLY TO ENTIRE SYSTEM.

BROMLEY COOK ENGINEERING, INC.
STRUCTURAL ENGINEERING SERVICES
5440 N.W. 33RD AVENUE SUITE 100
FORT LAUDERDALE, FLORIDA 33309
TEL: (954) 772-4624 FAX: (954) 772-4634

WILLIAM D. COOK P.E.
FLA. P.E. #43904

FEB 0 3 2009

SYSTEM

ARCH ALUMINUM AND GLASS SERIES
IFG 5100 STOREFRONT WALL

MANUFACTURER

ARCH ALUMINUM AND GLASS LLC
10200 N.W. 67th STREET
TAMARAC, FLORIDA 33321
TEL. (800) 432-8132 FAX. (954) 724-9293

DATE: 9/9/08	SCALE:	DRAWN: DGI	REVISION / DATE 1 – 2/2/09	DRAWING # IFG 5100	SHEET NO. 1 OF 13

MIAMI-DADE COUNTY USE ONLY

Approved as complying with the Florida Building Code
Date MARCH 11, 2009
NOA# 08-1015.08
Miami-Dade Product Control
By

DESIGN LOAD CAPACITY – PSF					DESIGN LOAD CAPACITY – PSF					DESIGN LOAD CAPACITY – PSF				
NOMINAL DIMS.		GLASS TYPE "A1"	GLASS TYPE "A2"	GLASS TYPE "A3"	NOMINAL DIMS.		GLASS TYPE "A1"	GLASS TYPE "A2"	GLASS TYPE "A3"	NOMINAL DIMS.		GLASS TYPE "A1"	GLASS TYPE "A2"	GLASS TYPE "A3"
D.L.O. WIDTH	D.L.O. HEIGHT	EXT. (+) INT. (–)	EXT. (+) INT. (–)	EXT. (+) INT. (–)	D.L.O. WIDTH	D.L.O. HEIGHT	EXT. (+) INT. (–)	EXT. (+) INT. (–)	EXT. (+) INT. (–)	D.L.O. WIDTH	D.L.O. HEIGHT	EXT. (+) INT. (–)	EXT. (+) INT. (–)	EXT. (+) INT. (–)
12"	56"	100.0	100.0	80.0	12"	91"	80.0	80.0	–	12"	139"	80.0	80.0	–
18"		100.0	100.0	80.0	18"		80.0	80.0	–	18"		80.0	80.0	–
24"		100.0	100.0	80.0	24"		80.0	80.0	–	24"		80.0	80.0	–
30"		100.0	100.0	73.3	30"		80.0	80.0	–	30"		–	–	–
36"		100.0	100.0	–	36"		80.0	80.0	–	36"		–	–	–
40"		100.0	100.0	–	40"		80.0	80.0	–	40"		–	–	–
45"		100.0	100.0	–	45"		80.0	80.0	–	45"		–	–	–
48"		100.0	100.0	–	48"		–	–	–	48"		–	–	–
52"		94.1	–	–	52"		–	–	–	52"		–	–	–
56"		85.7	–	–	56"		–	–	–	56"		–	–	–
12"	60"	100.0	80.0	80.0	12"	103"	80.0	80.0	–					
18"		100.0	80.0	80.0	18"		80.0	80.0	–					
24"		100.0	80.0	80.0	24"		80.0	80.0	–					
30"		100.0	80.0	73.3	30"		80.0	80.0	–					
36"		100.0	80.0	–	36"		80.0	80.0	–					
40"		100.0	80.0	–	40"		80.0	80.0	–					
45"		100.0	80.0	–	45"		–	–	–					
48"		100.0	80.0	–	48"		–	–	–					
52"		94.1	80.0	–	52"		–	–	–					
56"		85.7	80.0	–	56"		–	–	–					
12"	67"	100.0	80.0	80.0	12"	115"	80.0	80.0	–					
18"		100.0	80.0	80.0	18"		80.0	80.0	–					
24"		100.0	80.0	80.0	24"		80.0	80.0	–					
30"		100.0	80.0	–	30"		80.0	80.0	–					
36"		100.0	80.0	–	36"		80.0	80.0	–					
40"		100.0	80.0	–	40"		–	–	–					
45"		100.0	80.0	–	45"		–	–	–					
48"		100.0	80.0	–	48"		–	–	–					
52"		94.1	80.0	–	52"		–	–	–					
56"		85.7	80.0	–	56"		–	–	–					
12"	79"	100.0	80.0	–	12"	127"	80.0	80.0	–					
18"		100.0	80.0	–	18"		80.0	80.0	–					
24"		100.0	80.0	–	24"		80.0	80.0	–					
30"		100.0	80.0	–	30"		80.0	80.0	–					
36"		100.0	80.0	–	36"		–	–	–					
40"		100.0	80.0	–	40"		–	–	–					
45"		100.0	80.0	–	45"		–	–	–					
48"		100.0	80.0	–	48"		–	–	–					
52"		80.0	–	–	52"		–	–	–					
56"		–	–	–	56"		–	–	–					

NOTE:
GLASS CHECKED PER ASTM E1300–02 AND TESTING

TYPICAL GLAZING DETAIL

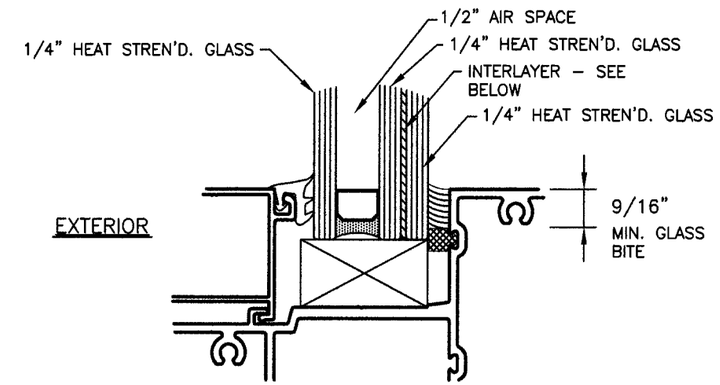

GLASS TYPE "A"

"A1" – .100" SENTRYGLAS PLUS INTERLAYER BY DUPONT

"A2" – .100" PVB INTERLAYER SAFLEX HP BY MONSANTO

"A3" – .090" SENTRYGLAS PLUS INTERLAYER BY DUPONT

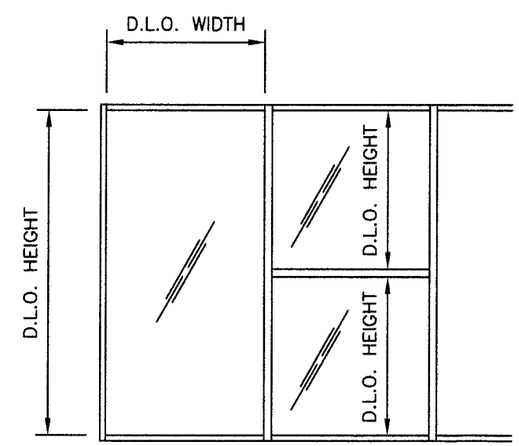

BROMLEY COOK ENGINEERING, INC.
STRUCTURAL ENGINEERING SERVICES
5440 N.W. 33RD AVENUE SUITE 100
FORT LAUDERDALE, FLORIDA 33309
TEL: (954) 772-4624 FAX: (954) 772-4634

WILLIAM D. COOK P.E.
FLA P.E. #43904

FEB 03 2009

SYSTEM
ARCH ALUMINUM AND GLASS SERIES
IFG 5100 STOREFRONT WALL

MANUFACTURER
ARCH ALUMINUM AND GLASS LLC
10200 N.W. 67th STREET
TAMARAC, FLORIDA 33321
TEL. (800) 432-8132 FAX. (954) 724-9293

DATE: 9/9/08	SCALE:	DRAWN: DGI	REVISION / DATE 1 – 2/2/09	DRAWING# IFG 5100	SHEET NO. 2 OF 13

MIAMI-DADE COUNTY USE ONLY

Approved as complying with the Florida Building Code
Date MARCH 11, 2009
NOA# 08-1015.08
Miami-Dade Product Control
By: Manuel Perez

MULLION LOAD CAPACITY – PSF 51501/51506 MULLION			MULLION LOAD CAPACITY – PSF 51501/51506 MULLION			MULLION LOAD CAPACITY – PSF 51501/51506 MULLION		
NOMINAL DIMS.		MAX. Pd	NOMINAL DIMS.		MAX. Pd	NOMINAL DIMS.		MAX. Pd
WIDTH (W)	FRAME HEIGHT	EXT. (+) INT. (–)	WIDTH (W)	FRAME HEIGHT	EXT. (+) INT. (–)	WIDTH (W)	FRAME HEIGHT	EXT. (+) INT. (–)
12"	60"	100.0	12"	96"	80.0	12"	132"	80.0
16"		100.0	16"		80.0	16"		80.0
20"		100.0	20"		80.0	20"		80.0
24"		100.0	24"		80.0	24"		80.0
28"		100.0	28"		80.0	28"		80.0
30"		100.0	30"		80.0	30"		80.0
32"		100.0	32"		80.0	32"		80.0
36"		100.0	36"		80.0	36"		–
40"		100.0	40"		80.0	40"		–
45"		100.0	45"		80.0	45"		–
51"		100.0	51"		–	51"		–
60"		100.0	60"		–	60"		–
12"	72"	100.0	12"	108"	80.0	12"	144"	80.0
16"		100.0	16"		80.0	16"		80.0
20"		100.0	20"		80.0	20"		80.0
24"		100.0	24"		80.0	24"		80.0
28"		100.0	28"		80.0	28"		70.0
30"		100.0	30"		80.0	30"		65.0
32"		100.0	32"		80.0	32"		–
36"		100.0	36"		80.0	36"		–
40"		100.0	40"		80.0	40"		–
45"		100.0	45"		–	45"		–
51"		80.0	51"		–	51"		–
60"		80.0	60"		–	60"		–
12"	84"	100.0	12"	120"	80.0			
16"		100.0	16"		80.0			
20"		100.0	20"		80.0			
24"		100.0	24"		80.0			
28"		100.0	28"		80.0			
30"		100.0	30"		80.0			
32"		100.0	32"		80.0			
36"		100.0	36"		80.0			
40"		100.0	40"		–			
45"		100.0	45"		–			
51"		80.0	51"		–			
60"		–	60"		–			

TYPICAL ELEVATION

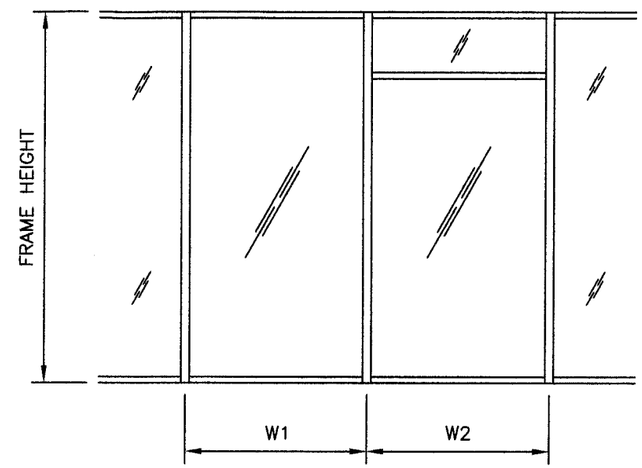

$$\text{WIDTH (W)} = \frac{W1 + W2}{2}$$

TYPICAL MULLION

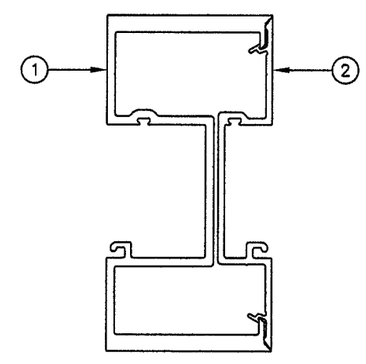

51501/51506

BROMLEY COOK ENGINEERING, INC.
STRUCTURAL ENGINEERING SERVICES
5440 N.W. 33RD AVENUE SUITE 100
FORT LAUDERDALE, FLORIDA 33309
TEL: (954) 772-4624 FAX: (954) 772-4634

WILLIAM D. COOK P.E.
FLA P.E. #43904

FEB 0 3 2009

SYSTEM
ARCH ALUMINUM AND GLASS SERIES
IFG 5100 STOREFRONT WALL

MANUFACTURER
ARCH ALUMINUM AND GLASS LLC
10200 N.W. 67th STREET
TAMARAC, FLORIDA 33321
TEL. (800) 432-8132 FAX. (954) 724-9293

DATE: 9/9/08	SCALE:	DRAWN: DGI	REVISION / DATE 1 – 2/2/09	DRAWING # IFG 5100	SHEET NO. 3 OF 13

MIAMI-DADE COUNTY USE ONLY

Approved as complying with the Florida Building Code
Date MARCH 11, 2009
NOA# 08-1015.08
Miami Dade Product Control Division
By Manuel Perez

JAMB LOAD CAPACITY – PSF 51501/51506 JAMB			JAMB LOAD CAPACITY – PSF 51501/51506 JAMB		
NOMINAL DIMS.		MAX. Pd	NOMINAL DIMS.		MAX. Pd
WIDTH (W)	FRAME HEIGHT	EXT. (+) INT. (–)	WIDTH (W)	FRAME HEIGHT	EXT. (+) INT. (–)
12"	60"	100.0	12"	108"	80.0
16"		100.0	16"		80.0
18"		100.0	18"		80.0
20"		100.0	20"		80.0
22"		100.0	22"		–
24"		100.0	24"		–
28"		80.0	28"		–
30"		80.0	30"		–
12"	72"	100.0	12"	120"	80.0
16"		100.0	16"		80.0
18"		100.0	18"		80.0
20"		100.0	20"		–
22"		100.0	22"		–
24"		100.0	24"		–
28"		100.0	28"		–
30"		80.0	30"		–
12"	84"	100.0	12"	132"	80.0
16"		100.0	16"		80.0
18"		100.0	18"		–
20"		100.0	20"		–
22"		100.0	22"		–
24"		100.0	24"		–
28"		–	28"		–
30"		–	30"		–
12"	96"	80.0	12"	144"	80.0
16"		80.0	16"		–
18"		80.0	18"		–
20"		80.0	20"		–
22"		80.0	22"		–
24"		–	24"		–
28"		–	28"		–
30"		–	30"		–

TYPICAL ELEVATION

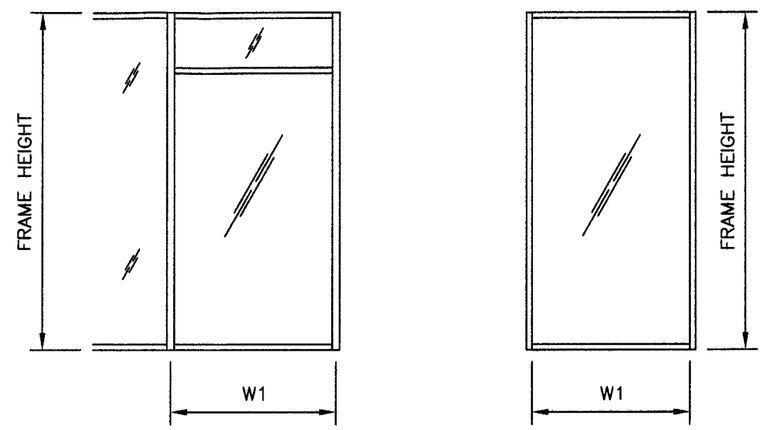

WIDTH (W) = W1 (JAMB)

WIDTH (W) = W1 (JAMB)

TYPICAL JAMB

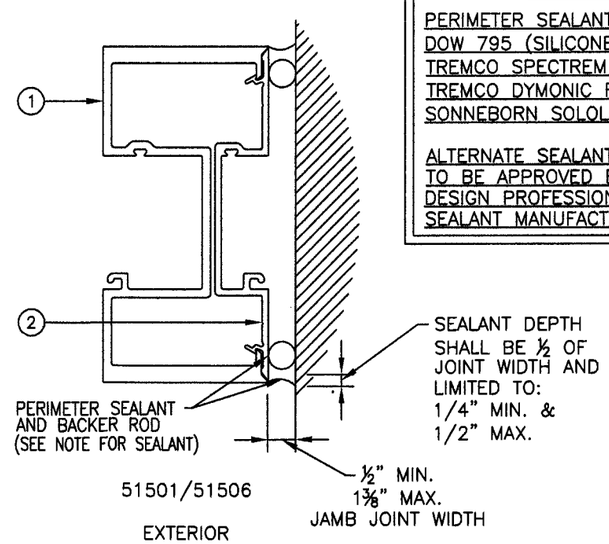

51501/51506

EXTERIOR

SEALANT NOTES:

PERIMETER SEALANT OPTIONS:
DOW 795 (SILICONE).
TREMCO SPECTREM 2 & 3 (SILICONE)
TREMCO DYMONIC FC (URETHANE)
SONNEBORN SOLOLASTIC 150 (ELASTOMERIC)

ALTERNATE SEALANTS & ALTERNATE JAMB GAPS: TO BE APPROVED BY DESIGN PROFESSIONAL OF RECORD AND SEALANT MANUFACTURER.

BROMLEY COOK ENGINEERING, INC.
STRUCTURAL ENGINEERING SERVICES
5440 N.W. 33RD AVENUE SUITE 100
FORT LAUDERDALE, FLORIDA 33309
TEL: (954) 772-4624 FAX: (954) 772-4634

WILLIAM D. COOK P.E.
FLA P.E. #43904

FEB 03 2009

SYSTEM
ARCH ALUMINUM AND GLASS SERIES
IFG 5100 STOREFRONT WALL

MANUFACTURER
ARCH ALUMINUM AND GLASS LLC
10200 N.W. 67th STREET
TAMARAC, FLORIDA 33321
TEL. (800) 432-8132 FAX. (954) 724-9293

DATE: 9/9/08	SCALE:	DRAWN: DGI	REVISION / DATE 1 – 2/2/09	DRAWING # IFG 5100	SHEET NO. 4 OF 13

MIAMI-DADE COUNTY USE ONLY

Approved as complying with the Florida Building Code
Date MARCH 11, 2009
NOA# 08-1015.08
Miami-Dade Product Control
By Marcel Perez

DOOR JAMB LOAD CAPACITY – PSF 51501/51506 JAMB		
NOMINAL DIMS.		MAX. Pd
WIDTH (W)	FRAME HEIGHT	EXT. (+) INT. (–)
24"	84"	80.0
30"		80.0
36"		80.0
42"		80.0
48"		80.0
54"		80.0
60"		80.0
66"		80.0
72"		80.0
24"	96"	80.0
30"		80.0
36"		80.0
42"		80.0
48"		80.0
54"		80.0
60"		80.0
66"		80.0
72"		–
24"	108"	80.0
30"		80.0
36"		80.0
42"		80.0
48"		77.0
54"		68.0
60"		61.0
66"		–
72"		–
24"	120"	80.0
30"		80.0
36"		76.0
42"		65.0
48"		57.0
54"		50.0
60"		–
66"		–
72"		–

TYPICAL ELEVATION

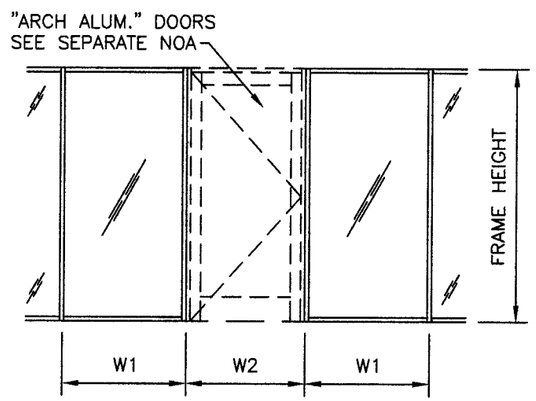

WIDTH (W) = $\frac{W1 + W2}{2}$ (MULLION)

WIDTH (W) = W1 (JAMB)

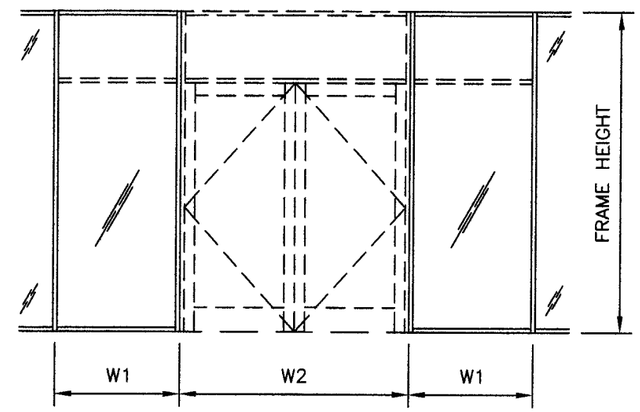

WIDTH (W) = $\frac{W1 + W2}{2}$ (MULLION)

WIDTH (W) = W1 (JAMB)

TYPICAL DOOR JAMB

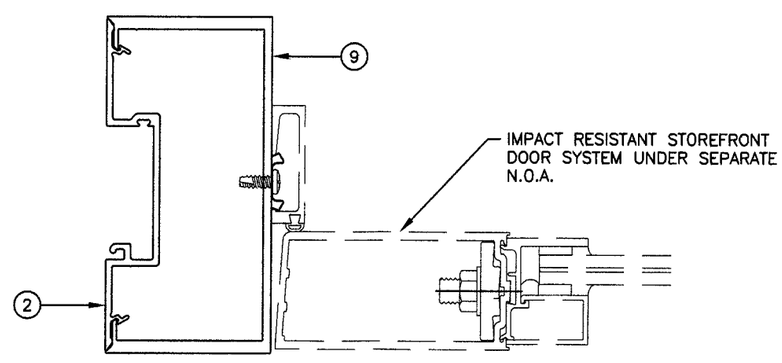

51506/AGA–999

BROMLEY COOK ENGINEERING, INC.
STRUCTURAL ENGINEERING SERVICES
5440 N.W. 33RD AVENUE SUITE 100
FORT LAUDERDALE, FLORIDA 33309
TEL: (954) 772-4624 FAX: (954) 772-4634

WILLIAM D. COOK P.E.
FLA P.E. #43904

FEB 03 2009

SYSTEM

ARCH ALUMINUM AND GLASS SERIES
IFG 5100 STOREFRONT WALL

MANUFACTURER

ARCH ALUMINUM AND GLASS LLC
10200 N.W. 67th STREET
TAMARAC, FLORIDA 33321
TEL. (800) 432-8132 FAX. (954) 724-9293

DATE: 9/9/08	SCALE:	DRAWN: DGI	REVISION / DATE 1 – 2/2/09	DRAWING # IFG 5100	SHEET NO. 5 OF 13

MIAMI-DADE COUNTY USE ONLY

Approved as complying with the Florida Building Code
Date MARCH 11, 2009
NOA# 08-1015.08
Miami-Dade Product Control
By Manuel Perez

ANCHOR LOAD CAPACITY (PSF) FOR 1/4" MAX. SHIM SPACE									
ANCHOR LOAD CAPACITY – PSF					ANCHOR LOAD CAPACITY – PSF				
NOMINAL DIMS.		ANCHOR TYPE			NOMINAL DIMS.		ANCHOR TYPE		
		"A2"	"B2"	"C2"			"A2"	"B2"	"C2"
WIDTH (W)	FRAME HEIGHT	EXT. (+) INT. (–)	EXT. (+) INT. (–)	EXT. (+) INT. (–)	WIDTH (W)	FRAME HEIGHT	EXT. (+) INT. (–)	EXT. (+) INT. (–)	EXT. (+) INT. (–)
12"	72"	100.0	100.0	100.0	12"	120"	80.0	80.0	80.0
18"		100.0	100.0	100.0	18"		80.0	80.0	80.0
24"		100.0	100.0	100.0	24"		80.0	80.0	80.0
30"		100.0	100.0	100.0	30"		80.0	80.0	80.0
36"		100.0	100.0	100.0	36"		80.0	80.0	80.0
42"		100.0	100.0	100.0	42"		80.0	80.0	78.0
48"		100.0	100.0	100.0	48"		71.0	80.0	68.0
54"		100.0	100.0	100.0	54"		63.0	80.0	61.0
60"		80.0	80.0	80.0	60"		–	–	–
66"		80.0	80.0	80.0	66"		–	–	–
12"	84"	100.0	100.0	100.0	12"	132"	80.0	80.0	80.0
18"		100.0	100.0	100.0	18"		80.0	80.0	80.0
24"		100.0	100.0	100.0	24"		80.0	80.0	80.0
30"		100.0	100.0	100.0	30"		80.0	80.0	80.0
36"		100.0	100.0	100.0	32"		80.0	80.0	80.0
42"		100.0	100.0	100.0	42"		–	–	–
48"		100.0	100.0	100.0	48"		–	–	–
54"		80.0	80.0	80.0	54"		–	–	–
60"		80.0	80.0	78.0	60"		–	–	–
66"		74.0	80.0	71.0	66"		–	–	–
12"	96"	80.0	80.0	80.0	12"	144"	80.0	80.0	80.0
18"		80.0	80.0	80.0	18"		80.0	80.0	80.0
24"		80.0	80.0	80.0	24"		80.0	80.0	80.0
30"		80.0	80.0	80.0	30"		80.0	80.0	80.0
36"		80.0	80.0	80.0	36"		–	–	–
42"		80.0	80.0	80.0	42"		–	–	–
48"		80.0	80.0	80.0	48"		–	–	–
54"		79.0	80.0	76.0	54"		–	–	–
60"		71.0	80.0	68.0	60"		–	–	–
66"		65.0	80.0	62.0	66"		–	–	–
12"	108"	80.0	80.0	80.0					
18"		80.0	80.0	80.0					
24"		80.0	80.0	80.0					
30"		80.0	80.0	80.0					
36"		80.0	80.0	80.0					
42"		80.0	80.0	80.0					
48"		79.0	80.0	76.0					
54"		71.0	80.0	67.0					
60"		63.0	80.0	61.0					
66"		–	–	–					

ANCHOR TYPES: SEE SHEET 11 FOR DESCRIPTION

"A2" – (2) ANCHORS TYPE "A" AT EA. SIDE OF MULLION OR JAMB
"B2" – (2) ANCHORS TYPE "B" AT EA. SIDE OF MULLION OR JAMB
"C2" – (2) ANCHORS TYPE "C" AT EA. SIDE OF MULLION OR JAMB
"A3" – (3) ANCHORS TYPE "A" AT EA. SIDE OF MULLION OR JAMB
"B3" – (3) ANCHORS TYPE "B" AT EA. SIDE OF MULLION OR JAMB
"C3" – (3) ANCHORS TYPE "C" AT EA. SIDE OF MULLION OR JAMB

ALL OTHER ANCHORS TO BE SPACED AS PER ELEVATION

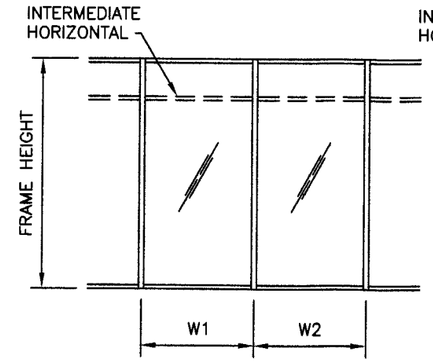

WIDTH (W) = $\frac{W1 + W2}{2}$

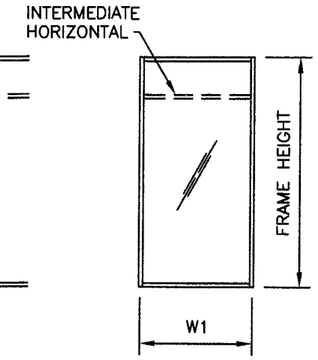

WIDTH (W) = W1 (JAMB)

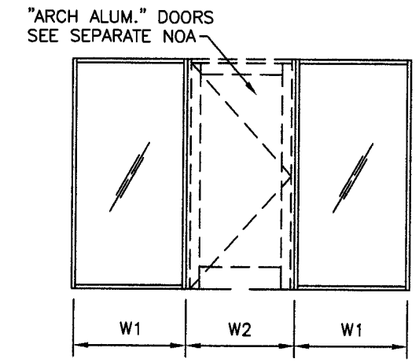

WIDTH (W) = $\frac{W1 + W2}{2}$ (MULLION)

WIDTH (W) = W1 (JAMB)

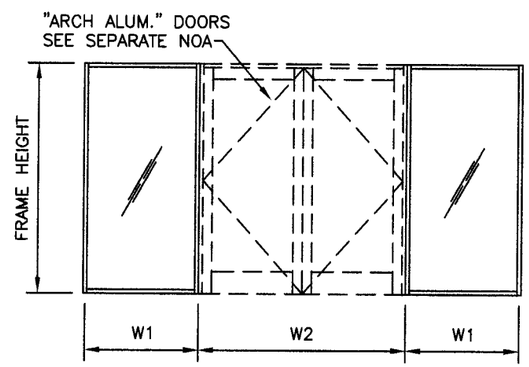

WIDTH (W) = $\frac{W1}{2} + \frac{W2}{4}$ (MULLION)

WIDTH (W) = W1 (JAMB)

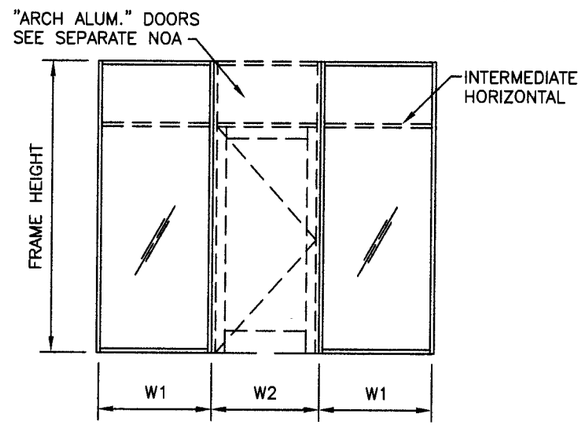

WIDTH (W) = $\frac{W1 + W2}{2}$ (MULLION)

WIDTH (W) = W1 (JAMB)

TYPICAL ANCHOR CLUSTERS

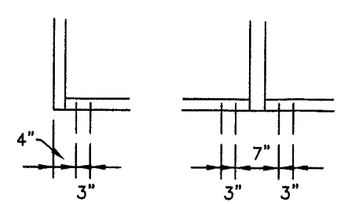

"A2", "B2", "C2"

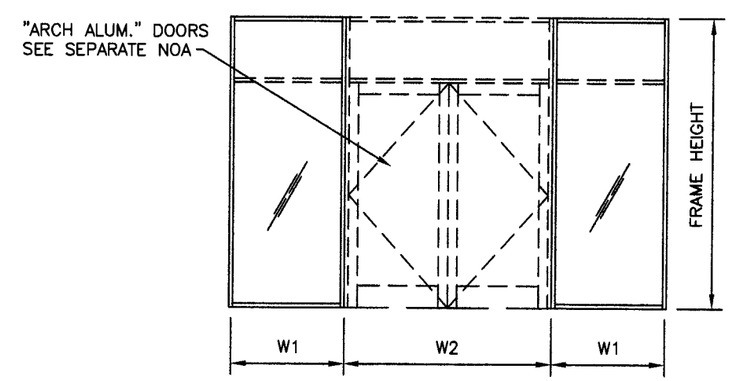

WIDTH (W) = $\frac{W1 + W2}{2}$ (MULLION)

WIDTH (W) = W1 (JAMB)

BROMLEY COOK ENGINEERING, INC.
STRUCTURAL ENGINEERING SERVICES
5440 N.W. 33RD AVENUE SUITE 100
FORT LAUDERDALE, FLORIDA 33309
TEL: (954) 772-4624 FAX: (954) 772-4634

WILLIAM D. COOK P.E.
FLA P.E. #43904

FEB 03 2009

SYSTEM
ARCH ALUMINUM AND GLASS SERIES
IFG 5100 STOREFRONT WALL

MANUFACTURER
ARCH ALUMINUM AND GLASS LLC
10200 N.W. 67th STREET
TAMARAC, FLORIDA 33321
TEL. (800) 432-8132 FAX. (954) 724-9293

DATE: 9/9/08	SCALE:	DRAWN: DGI	REVISION / DATE 1 – 2/2/09	DRAWING# IFG 5100	SHEET NO. 6 OF 13

MIAMI-DADE COUNTY USE ONLY

Approved as complying with the Florida Building Code
Date MARCH 11, 2009
NOA# 08-1015.08
Miami Dade Product Control
Date
By Manuel Perez

ANCHOR LOAD CAPACITY (PSF) FOR 1/4" MAX. SHIM SPACE

ANCHOR LOAD CAPACITY – PSF					ANCHOR LOAD CAPACITY – PSF				
NOMINAL DIMS.		ANCHOR TYPE			NOMINAL DIMS.		ANCHOR TYPE		
		"A3"	"B3"	"C3"			"A3"	"B3"	"C3"
WIDTH (W)	FRAME HEIGHT	EXT. (+) INT. (–)	EXT. (+) INT. (–)	EXT. (+) INT. (–)	WIDTH (W)	FRAME HEIGHT	EXT. (+) INT. (–)	EXT. (+) INT. (–)	EXT. (+) INT. (–)
12"	72"	100.0	100.0	100.0	12"	120"	80.0	80.0	80.0
18"		100.0	100.0	100.0	18"		80.0	80.0	80.0
24"		100.0	100.0	100.0	24"		80.0	80.0	80.0
30"		100.0	100.0	100.0	30"		80.0	80.0	80.0
36"		100.0	100.0	100.0	36"		80.0	80.0	80.0
42"		100.0	100.0	100.0	42"		80.0	80.0	80.0
48"		100.0	100.0	100.0	48"		71.0	80.0	80.0
54"		100.0	100.0	100.0	54"		63.0	80.0	80.0
60"		80.0	80.0	80.0	60"		–	–	–
66"		80.0	80.0	80.0	66"		–	–	–
12"	84"	100.0	100.0	100.0	12"	132"	80.0	80.0	80.0
18"		100.0	100.0	100.0	18"		80.0	80.0	80.0
24"		100.0	100.0	100.0	24"		80.0	80.0	80.0
30"		100.0	100.0	100.0	30"		80.0	80.0	80.0
36"		100.0	100.0	100.0	32"		80.0	80.0	80.0
42"		100.0	100.0	100.0	42"		–	–	–
48"		100.0	100.0	100.0	48"		–	–	–
54"		80.0	80.0	80.0	54"		–	–	–
60"		80.0	80.0	78.0	60"		–	–	–
66"		80.0	80.0	71.0	66"		–	–	–
12"	96"	80.0	80.0	80.0	12"	144"	80.0	80.0	80.0
18"		80.0	80.0	80.0	18"		80.0	80.0	80.0
24"		80.0	80.0	80.0	24"		80.0	80.0	80.0
30"		80.0	80.0	80.0	30"		80.0	80.0	80.0
36"		80.0	80.0	80.0	36"		–	–	–
42"		80.0	80.0	80.0	42"		–	–	–
48"		80.0	80.0	80.0	48"		–	–	–
54"		80.0	80.0	80.0	54"		–	–	–
60"		80.0	80.0	80.0	60"		–	–	–
66"		80.0	80.0	80.0	66"		–	–	–
12"	108"	80.0	80.0	80.0					
18"		80.0	80.0	80.0					
24"		80.0	80.0	80.0					
30"		80.0	80.0	80.0					
36"		80.0	80.0	80.0					
42"		80.0	80.0	80.0					
48"		80.0	80.0	80.0					
54"		80.0	80.0	80.0					
60"		80.0	80.0	80.0					
66"		–	–	–					

ANCHOR TYPES: SEE SHEET 11 FOR DESCRIPTION

"A2" – (2) ANCHORS TYPE "A" AT EA. SIDE OF MULLION OR JAMB
"B2" – (2) ANCHORS TYPE "B" AT EA. SIDE OF MULLION OR JAMB
"C2" – (2) ANCHORS TYPE "C" AT EA. SIDE OF MULLION OR JAMB
"A3" – (3) ANCHORS TYPE "A" AT EA. SIDE OF MULLION OR JAMB
"B3" – (3) ANCHORS TYPE "B" AT EA. SIDE OF MULLION OR JAMB
"C3" – (3) ANCHORS TYPE "C" AT EA. SIDE OF MULLION OR JAMB

ALL OTHER ANCHORS TO BE SPACED AS PER ELEVATION

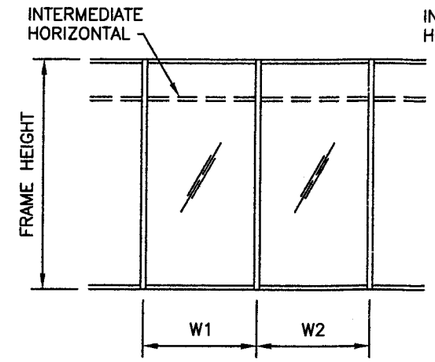

WIDTH (W) = $\frac{W1 + W2}{2}$

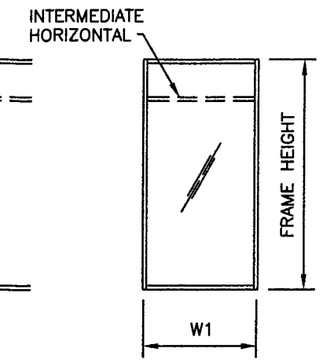

WIDTH (W) = W1 (JAMB)

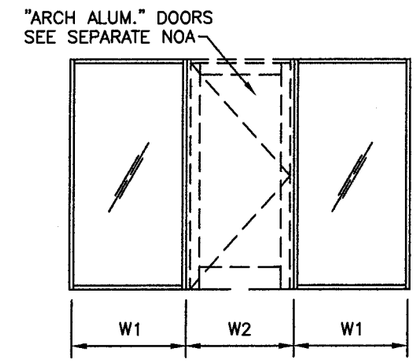

WIDTH (W) = $\frac{W1 + W2}{2}$ (MULLION)

WIDTH (W) = W1 (JAMB)

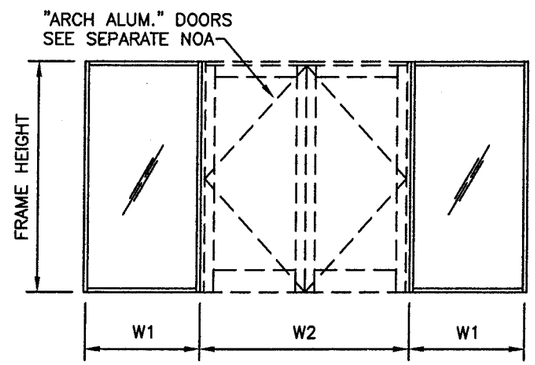

WIDTH (W) = $\frac{W1}{2} + \frac{W2}{4}$ (MULLION)

WIDTH (W) = W1 (JAMB)

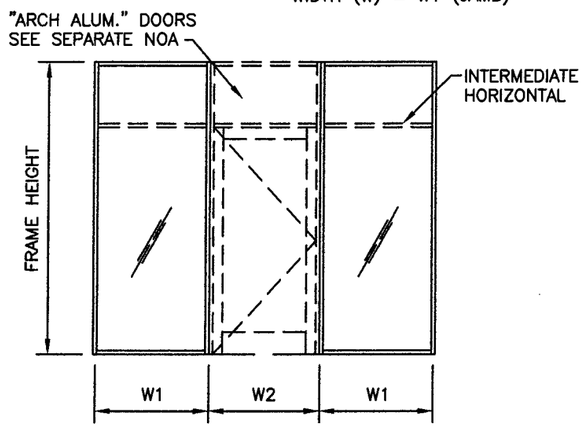

WIDTH (W) = $\frac{W1 + W2}{2}$ (MULLION)

WIDTH (W) = W1 (JAMB)

TYPICAL ANCHOR CLUSTERS

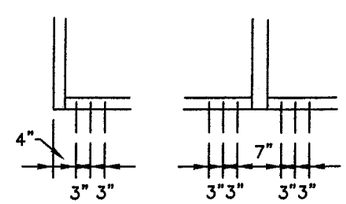

"A3", "B3", "C3"

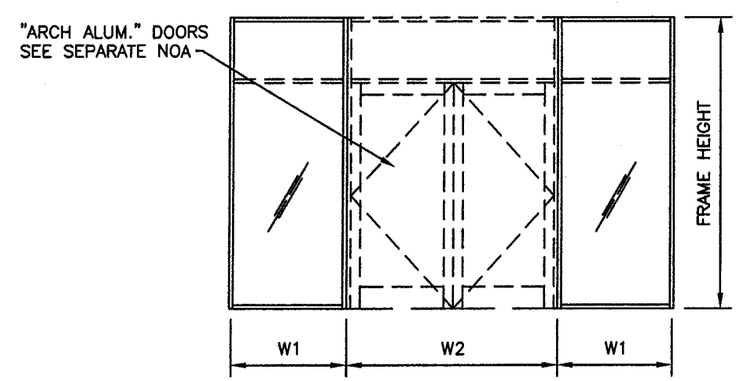

WIDTH (W) = $\frac{W1 + W2}{2}$ (MULLION)

WIDTH (W) = W1 (JAMB)

BROMLEY COOK ENGINEERING, INC.
STRUCTURAL ENGINEERING SERVICES
5440 N.W. 33RD AVENUE SUITE 100
FORT LAUDERDALE, FLORIDA 33309
TEL: (954) 772-4624 FAX: (954) 772-4634

WILLIAM D. COOK P.E.
FLA P.E. #43904

FEB 0 3 2009

SYSTEM

ARCH ALUMINUM AND GLASS SERIES
IFG 5100 STOREFRONT WALL

MANUFACTURER

ARCH ALUMINUM AND GLASS LLC
10200 N.W. 67th STREET
TAMARAC, FLORIDA 33321
TEL. (800) 432-8132 FAX. (954) 724-9293

DATE: 9/9/08	SCALE:	DRAWN: DGI	REVISION / DATE 1 – 2/2/09	DRAWING # IFG 5100	SHEET NO. 7 OF 13

MIAMI-DADE COUNTY USE ONLY

Approved as complying with the Florida Building Code
Date MARCH 11, 2009
NOA# 08-1015.08
Miami-Dade County
By Manuel Perez

ANCHOR LOAD CAPACITY (PSF) FOR 3/8" MAX. SHIM SPACE

ANCHOR LOAD CAPACITY – PSF					ANCHOR LOAD CAPACITY – PSF				
NOMINAL DIMS.		ANCHOR TYPE			NOMINAL DIMS.		ANCHOR TYPE		
		"A2"	"B2"	"C2"			"A2"	"B2"	"C2"
WIDTH (W)	FRAME HEIGHT	EXT. (+) INT. (–)	EXT. (+) INT. (–)	EXT. (+) INT. (–)	WIDTH (W)	FRAME HEIGHT	EXT. (+) INT. (–)	EXT. (+) INT. (–)	EXT. (+) INT. (–)
12"	72"	100.0	100.0	100.0	12"	120"	80.0	80.0	80.0
18"		100.0	100.0	100.0	18"		80.0	80.0	80.0
24"		100.0	100.0	100.0	24"		80.0	67.0	80.0
30"		100.0	80.0	100.0	30"		80.0	54.0	80.0
36"		100.0	75.0	100.0	36"		72.0	45.0	72.0
42"		100.0	64.0	100.0	42"		62.0	38.0	62.0
48"		90.0	56.0	90.0	48"		54.0	34.0	54.0
54"		80.0	50.0	80.0	54"		46.0	30.0	48.0
60"		72.0	45.0	72.0	60"		–	–	–
66"		66.0	41.0	66.0	66"		–	–	–
12"	84"	100.0	100.0	100.0	12"	132"	80.0	80.0	80.0
18"		100.0	100.0	100.0	18"		80.0	80.0	80.0
24"		100.0	96.0	100.0	24"		80.0	61.0	80.0
30"		100.0	77.0	100.0	30"		79.0	49.0	79.0
36"		100.0	64.0	100.0	32"		74.0	46.0	74.0
42"		88.0	55.0	88.0	42"		–	–	–
48"		77.0	48.0	77.0	48"		–	–	–
54"		68.0	43.0	69.0	54"		–	–	–
60"		62.0	38.0	62.0	60"		–	–	–
66"		56.0	35.0	56.0	66"		–	–	–
12"	96"	80.0	80.0	80.0	12"	144"	80.0	80.0	80.0
18"		80.0	80.0	80.0	18"		80.0	76.0	80.0
24"		80.0	80.0	80.0	24"		80.0	58.0	80.0
30"		80.0	67.0	80.0	30"		72.0	45.0	72.0
36"		80.0	56.0	80.0	36"		–	–	–
42"		77.0	48.0	77.0	42"		–	–	–
48"		68.0	42.0	68.0	48"		–	–	–
54"		60.0	37.0	60.0	54"		–	–	–
60"		54.0	34.0	54.0	60"		–	–	–
66"		49.0	31.0	49.0	66"		–	–	–
12"	108"	80.0	80.0	80.0					
18"		80.0	80.0	80.0					
24"		80.0	75.0	80.0					
30"		80.0	60.0	80.0					
36"		80.0	50.0	80.0					
42"		69.0	43.0	69.0					
48"		60.0	37.0	60.0					
54"		54.0	33.0	54.0					
60"		48.0	30.0	48.0					
66"		–	–	–					

ANCHOR TYPES: SEE SHEET 11 FOR DESCRIPTION

"A2" – (2) ANCHORS TYPE "A" AT EA. SIDE OF MULLION OR JAMB
"B2" – (2) ANCHORS TYPE "B" AT EA. SIDE OF MULLION OR JAMB
"C2" – (2) ANCHORS TYPE "C" AT EA. SIDE OF MULLION OR JAMB
"A3" – (3) ANCHORS TYPE "A" AT EA. SIDE OF MULLION OR JAMB
"B3" – (3) ANCHORS TYPE "B" AT EA. SIDE OF MULLION OR JAMB
"C3" – (3) ANCHORS TYPE "C" AT EA. SIDE OF MULLION OR JAMB

ALL OTHER ANCHORS TO BE SPACED AS PER ELEVATION

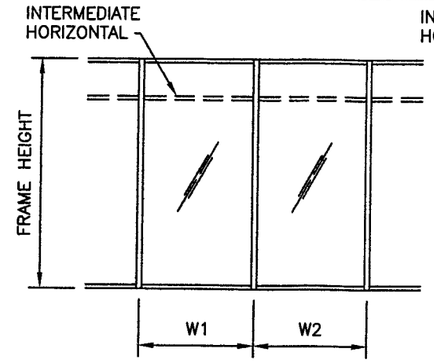

WIDTH (W) = $\frac{W1 + W2}{2}$

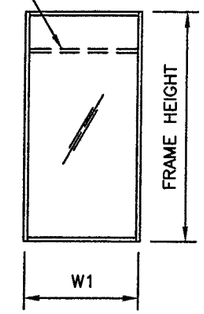

WIDTH (W) = W1 (JAMB)

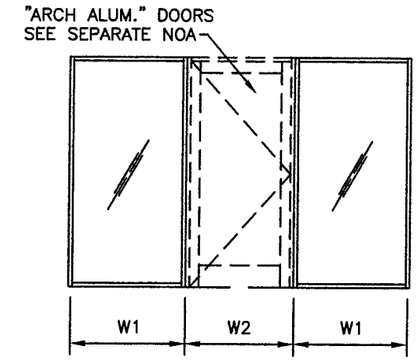

WIDTH (W) = $\frac{W1 + W2}{2}$ (MULLION)

WIDTH (W) = W1 (JAMB)

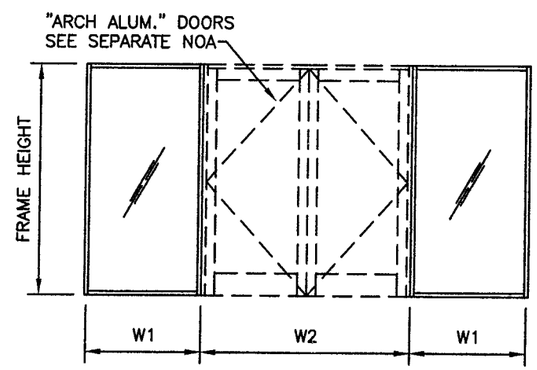

WIDTH (W) = $\frac{W1}{2} + \frac{W2}{4}$ (MULLION)

WIDTH (W) = W1 (JAMB)

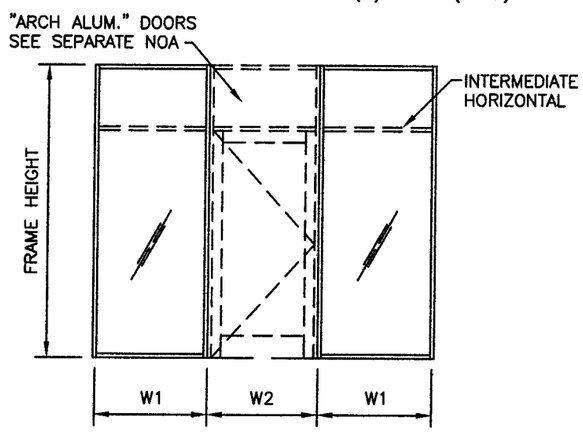

WIDTH (W) = $\frac{W1 + W2}{2}$ (MULLION)

WIDTH (W) = W1 (JAMB)

TYPICAL ANCHOR CLUSTERS

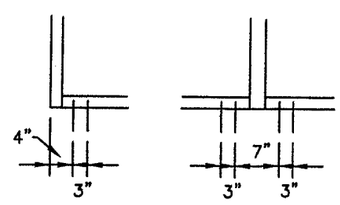

"A2", "B2", "C2"

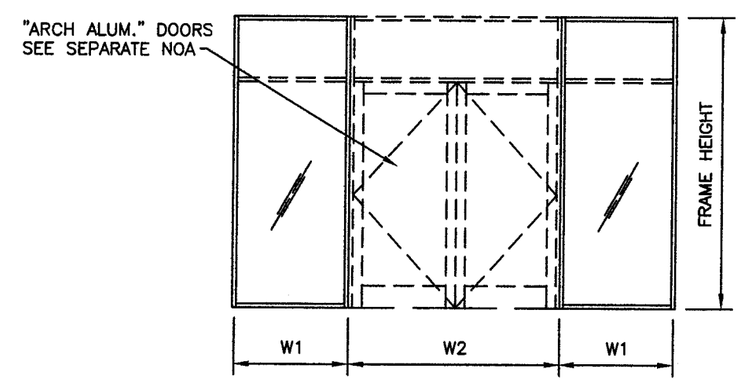

WIDTH (W) = $\frac{W1 + W2}{2}$ (MULLION)

WIDTH (W) = W1 (JAMB)

BROMLEY COOK ENGINEERING, INC.
STRUCTURAL ENGINEERING SERVICES
5440 N.W. 33RD AVENUE SUITE 100
FORT LAUDERDALE, FLORIDA 33309
TEL: (954) 772-4624 FAX: (954) 772-4634

WILLIAM D. COOK P.E.
FLA P.E. #43904

FEB 0 3 2009

SYSTEM

ARCH ALUMINUM AND GLASS SERIES
IFG 5100 STOREFRONT WALL

MANUFACTURER

ARCH ALUMINUM AND GLASS LLC
10200 N.W. 67th STREET
TAMARAC, FLORIDA 33321
TEL. (800) 432-8132 FAX. (954) 724-9293

DATE: 9/9/08	SCALE:	DRAWN: DGI	REVISION / DATE 1 – 2/2/09	DRAWING # IFG 5100	SHEET NO. 8 OF 13

MIAMI-DADE COUNTY USE ONLY

Approved as complying with the Florida Building Code
Date MARCH 11, 2009
NOA 08-1015.08
Miami-Dade Product Control
By Manuel Perez

ANCHOR LOAD CAPACITY (PSF) FOR 3/8" MAX. SHIM SPACE

ANCHOR LOAD CAPACITY – PSF					ANCHOR LOAD CAPACITY – PSF				
NOMINAL DIMS.		ANCHOR TYPE			NOMINAL DIMS.		ANCHOR TYPE		
		"A3"	"B3"	"C3"			"A3"	"B3"	"C3"
WIDTH (W)	FRAME HEIGHT	EXT. (+) INT. (–)	EXT. (+) INT. (–)	EXT. (+) INT. (–)	WIDTH (W)	FRAME HEIGHT	EXT. (+) INT. (–)	EXT. (+) INT. (–)	EXT. (+) INT. (–)
12"	72"	100.0	100.0	100.0	12"	120"	80.0	80.0	80.0
18"		100.0	100.0	100.0	18"		80.0	80.0	80.0
24"		100.0	100.0	100.0	24"		80.0	80.0	80.0
30"		100.0	100.0	100.0	30"		80.0	80.0	80.0
36"		100.0	100.0	100.0	36"		80.0	67.0	80.0
42"		100.0	96.0	100.0	42"		80.0	58.0	80.0
48"		100.0	84.0	100.0	48"		80.0	50.0	80.0
54"		100.0	75.0	100.0	54"		72.0	45.0	72.0
60"		80.0	67.0	80.0	60"		–	–	–
66"		80.0	61.0	80.0	66"		–	–	–
12"	84"	100.0	100.0	100.0	12"	132"	80.0	80.0	80.0
18"		100.0	100.0	100.0	18"		80.0	80.0	80.0
24"		100.0	100.0	100.0	24"		80.0	80.0	80.0
30"		100.0	100.0	100.0	30"		80.0	73.0	80.0
36"		100.0	96.0	100.0	32"		80.0	69.0	80.0
42"		100.0	82.0	100.0	42"		–	–	–
48"		100.0	72.0	100.0	48"		–	–	–
54"		80.0	64.0	80.0	54"		–	–	–
60"		80.0	58.0	80.0	60"		–	–	–
66"		80.0	52.0	80.0	66"		–	–	–
12"	96"	80.0	80.0	80.0	12"	144"	80.0	80.0	80.0
18"		80.0	80.0	80.0	18"		80.0	80.0	80.0
24"		80.0	80.0	80.0	24"		80.0	80.0	80.0
30"		80.0	80.0	80.0	30"		80.0	67.0	80.0
36"		80.0	80.0	80.0	36"		–	–	–
42"		80.0	72.0	80.0	42"		–	–	–
48"		80.0	63.0	80.0	48"		–	–	–
54"		80.0	56.0	80.0	54"		–	–	–
60"		80.0	50.0	80.0	60"		–	–	–
66"		74.0	46.0	74.0	66"		–	–	–
12"	108"	80.0	80.0	80.0					
18"		80.0	80.0	80.0					
24"		80.0	80.0	80.0					
30"		80.0	80.0	80.0					
36"		80.0	75.0	80.0					
42"		80.0	64.0	80.0					
48"		80.0	56.0	80.0					
54"		80.0	50.0	80.0					
60"		72.0	46.0	72.0					
66"		–	–	–					

ANCHOR TYPES: SEE SHEET 11 FOR DESCRIPTION

"A2" – (2) ANCHORS TYPE "A" AT EA. SIDE OF MULLION OR JAMB
"B2" – (2) ANCHORS TYPE "B" AT EA. SIDE OF MULLION OR JAMB
"C2" – (2) ANCHORS TYPE "C" AT EA. SIDE OF MULLION OR JAMB
"A3" – (3) ANCHORS TYPE "A" AT EA. SIDE OF MULLION OR JAMB
"B3" – (3) ANCHORS TYPE "B" AT EA. SIDE OF MULLION OR JAMB
"C3" – (3) ANCHORS TYPE "C" AT EA. SIDE OF MULLION OR JAMB

ALL OTHER ANCHORS TO BE SPACED AS PER ELEVATION

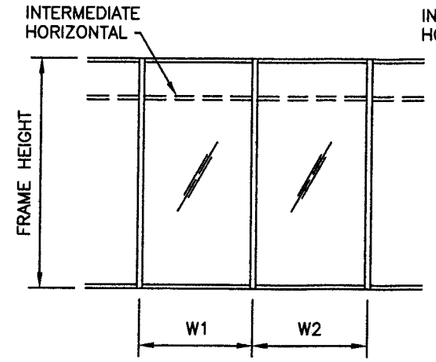

WIDTH (W) = $\frac{W1 + W2}{2}$

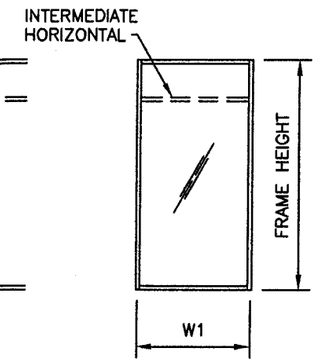

WIDTH (W) = W1 (JAMB)

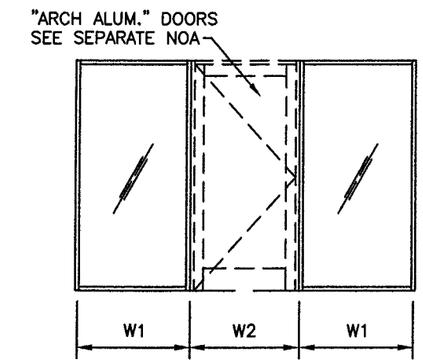

WIDTH (W) = $\frac{W1 + W2}{2}$ (MULLION)

WIDTH (W) = W1 (JAMB)

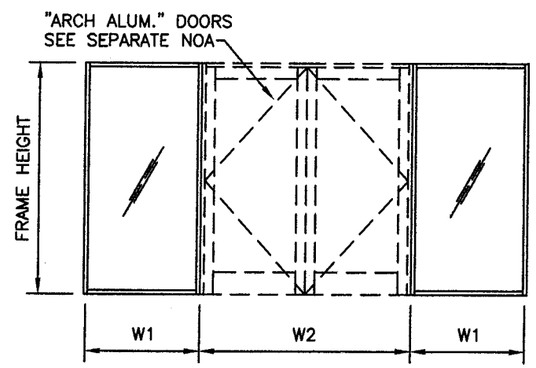

WIDTH (W) = $\frac{W1}{2} + \frac{W2}{4}$ (MULLION)

WIDTH (W) = W1 (JAMB)

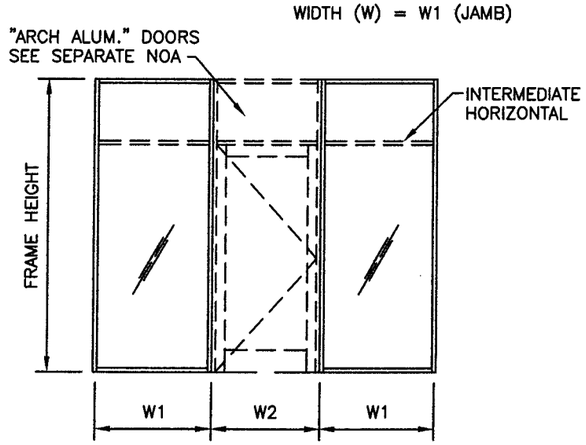

WIDTH (W) = $\frac{W1 + W2}{2}$ (MULLION)

WIDTH (W) = W1 (JAMB)

TYPICAL ANCHOR CLUSTERS

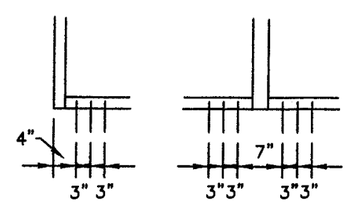

"A3", "B3", "C3"

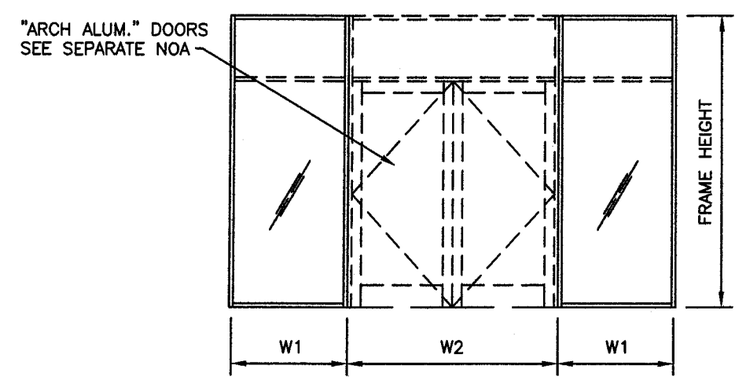

WIDTH (W) = $\frac{W1 + W2}{2}$ (MULLION)

WIDTH (W) = W1 (JAMB)

BROMLEY COOK ENGINEERING, INC.
STRUCTURAL ENGINEERING SERVICES
5440 N.W. 33RD AVENUE SUITE 100
FORT LAUDERDALE, FLORIDA 33309
TEL: (954) 772-4624 FAX: (954) 772-4634

WILLIAM D. COOK P.E.
FLA P.E. #43904

FEB 03 2009

SYSTEM

ARCH ALUMINUM AND GLASS SERIES
IFG 5100 STOREFRONT WALL

MANUFACTURER

ARCH ALUMINUM AND GLASS LLC
10200 N.W. 67th STREET
TAMARAC, FLORIDA 33321
TEL. (800) 432-8132 FAX. (954) 724-9293

DATE: 9/9/08	SCALE:	DRAWN: DGI	REVISION / DATE 1 – 2/2/09	DRAWING # IFG 5100	SHEET NO. 9 OF 13

MIAMI-DADE COUNTY USE ONLY

Approved as complying with the Florida Building Code
Date MARCH 11, 2009
NOA# 08-1015.08
Miami-Dade Product Control
By

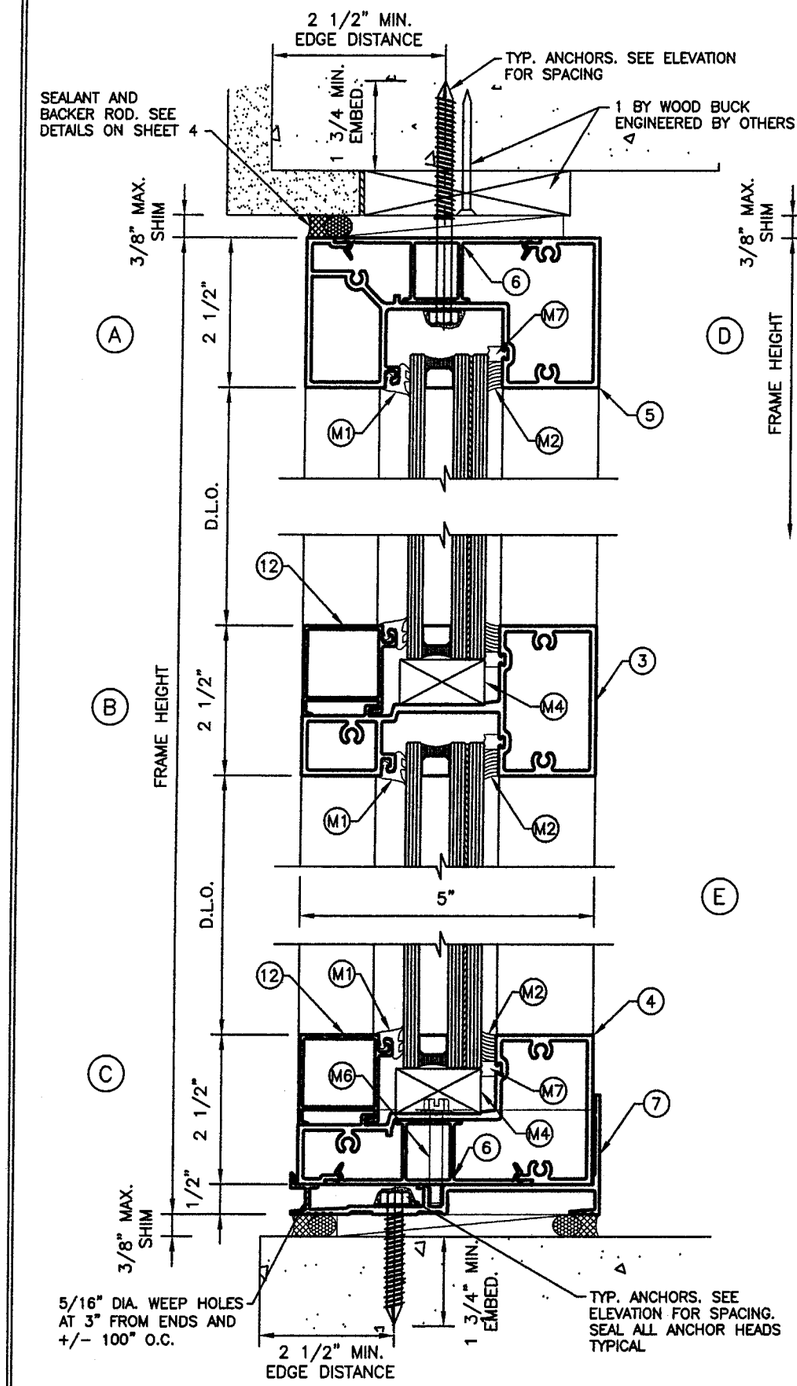

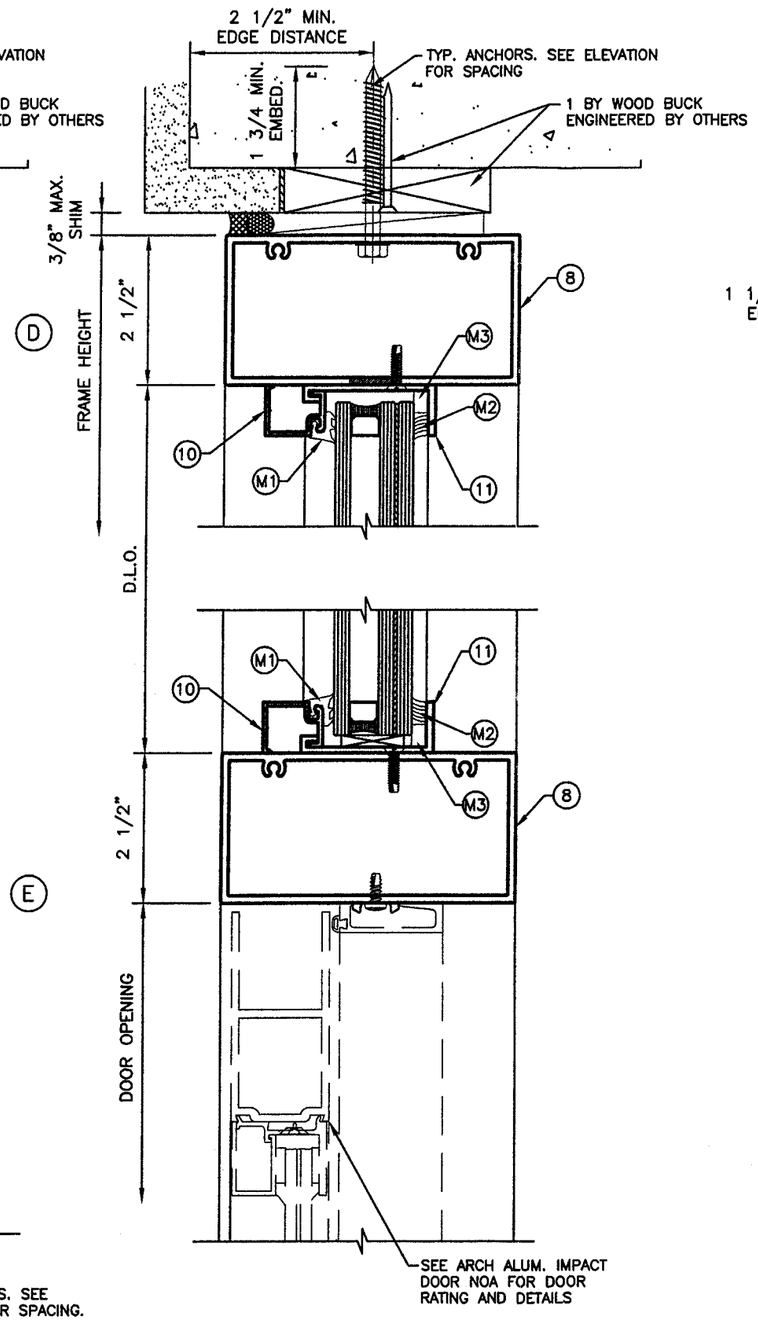

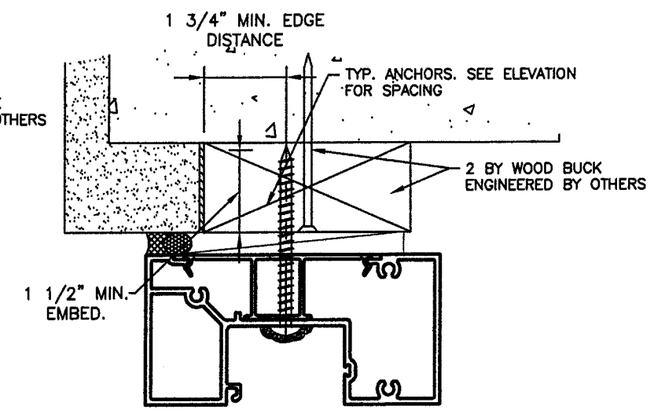

ANCHOR TYPE – C

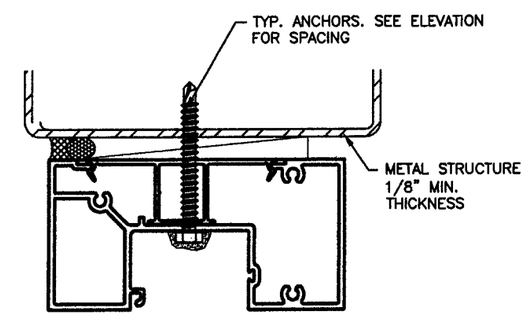

ANCHOR TYPE – B

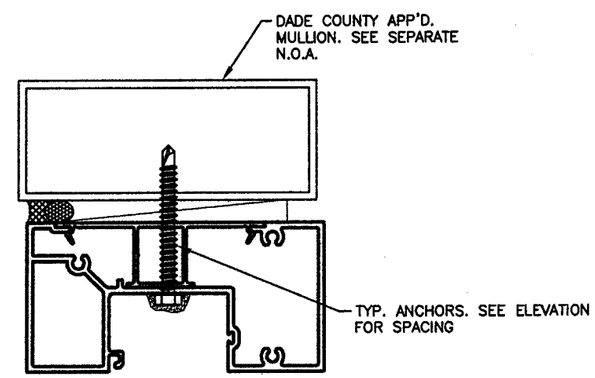

ANCHOR TYPE – B

BROMLEY COOK ENGINEERING, INC.
STRUCTURAL ENGINEERING SERVICES
5440 N.W. 33RD AVENUE SUITE 100
FORT LAUDERDALE, FLORIDA 33309
TEL: (954) 772-4624 FAX: (954) 772-4634

WILLIAM D. COOK P.E.
FLA P.E. #43904

FEB 03 2009

SYSTEM

ARCH ALUMINUM AND GLASS SERIES
IFG 5100 STOREFRONT WALL

MANUFACTURER

ARCH ALUMINUM AND GLASS LLC
10200 N.W. 67th STREET
TAMARAC, FLORIDA 33321
TEL. (800) 432-8132 FAX. (954) 724-9293

DATE: 9/9/08	SCALE:	DRAWN: DGI	REVISION / DATE 1 – 2/2/09	DRAWING # IFG 5100	SHEET NO. 10 OF 13

MIAMI-DADE COUNTY USE ONLY

Approved as complying with the Florida Building Code
Date MARCH 11, 2009
NOA# 08-1015.08
Miami-Dade Product Control Division
By Manuel Perez

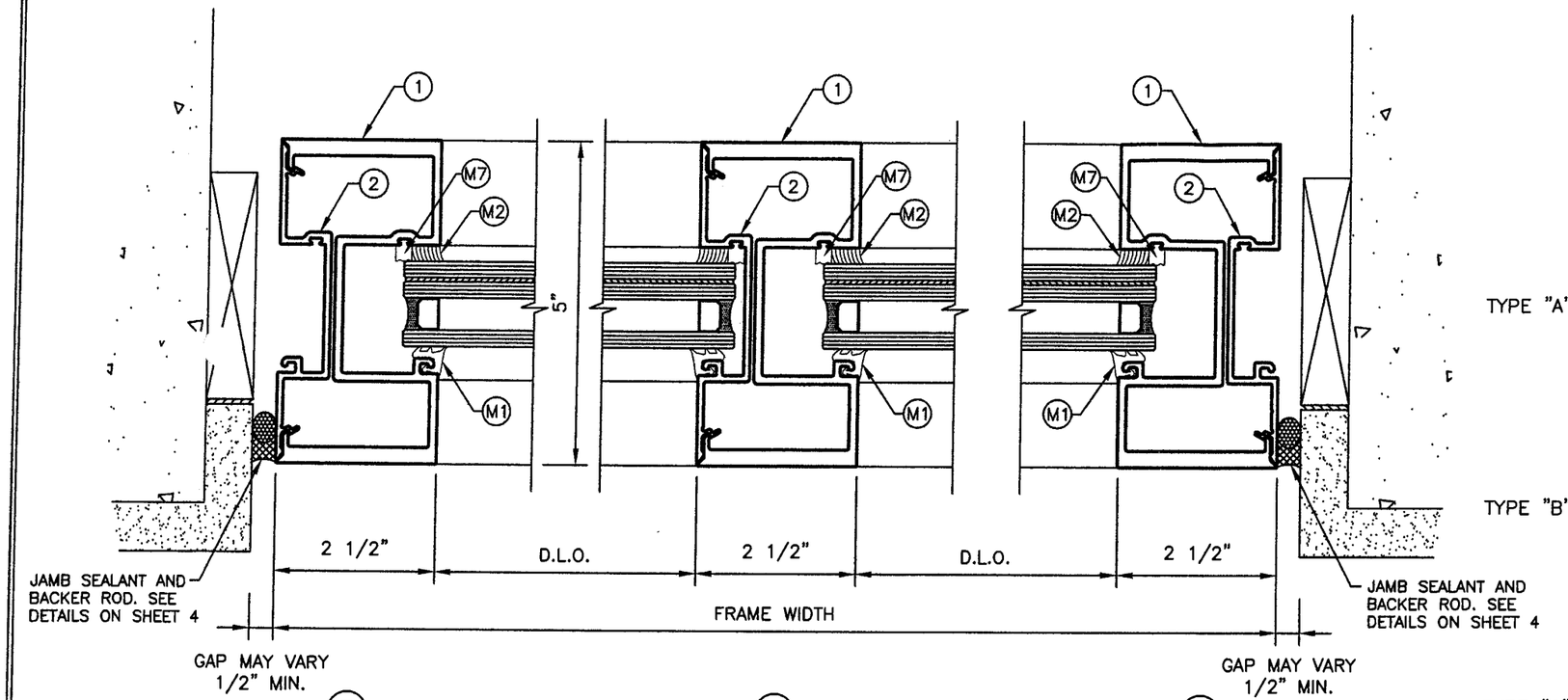

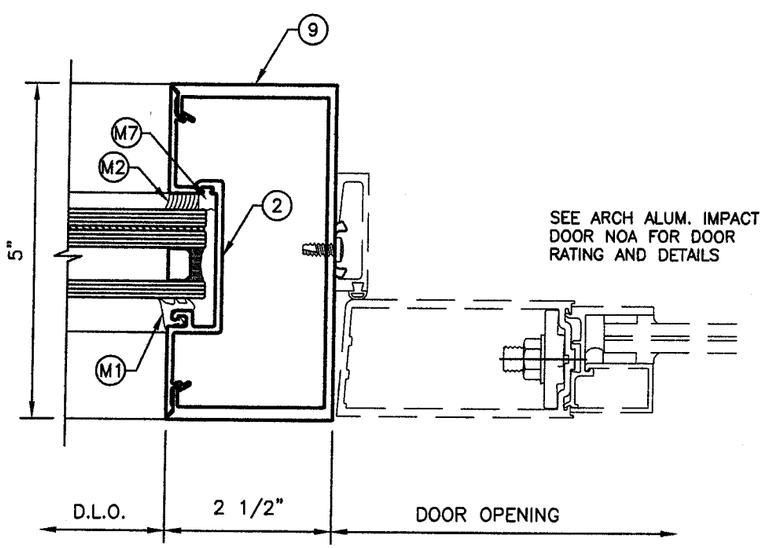

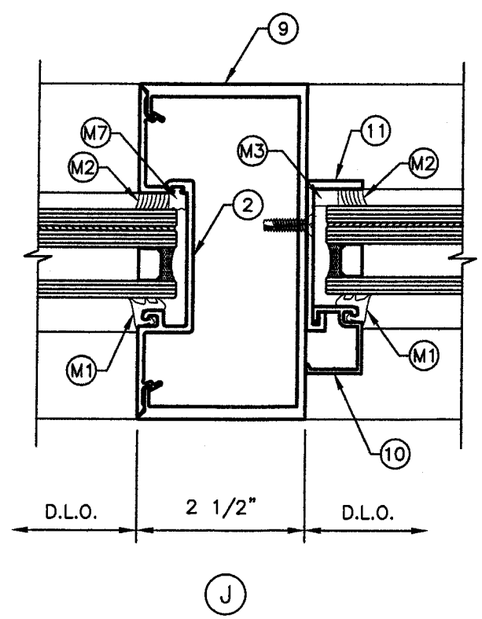

WOOD BUCKS NOT BY ARCH ALUMINUM MUST SUPPORT LOADS IMPOSED BY GLAZING SYSTEM AND TRANSFER THEM TO THE BUILDING STRUCTURE.

TYPICAL ANCHORS:

SEE ELEVATIONS FOR SPACING

TYPE "A"–1/4" TAPCONS

THRU 1BY WOOD OR 2BY WOOD BUCKS INTO 3000 PSI MIN. CONC. OR C–90 GROUT FILLED BLOCK. 1 1/2" MIN. EMBED. INTO CONC. OR MASONRY

DIRECTLY INTO 3000 PSI MIN. CONCRETE 1 1/2" MIN. EMBED. INTO CONC.

TYPE "B"–#14 SMS OR 1/4" SELF DRILLING SCREWS

INTO METAL STRUCTURES (STEEL OR ALUM. 1/8" MIN. THICK.)

STEEL: Fy – 36 KSI MIN.
ALUMINUM: 6063–T5 MIN.
(STEEL IN CONTACT WITH ALUM. TO BE PLATED OR PAINTED)

TYPE "C"– 1/4" TAPCONS

INTO BY WOOD BUCKS OR WOOD STRUCTURES 1 1/2" MIN. PENETRATION INTO #2 SYP BUCK

TYPICAL EDGE DISTANCE

INTO CONC. OR MASONRY = 2 1/2" MIN.
INTO WOOD STRUCTURE = 1 3/4" MIN.
INTO METAL STRUCTURE = 3/4" MIN.

BROMLEY COOK ENGINEERING, INC.
STRUCTURAL ENGINEERING SERVICES
5440 N.W. 33RD AVENUE SUITE 100
FORT LAUDERDALE, FLORIDA 33309
TEL: (954) 772-4624 FAX: (954) 772-4634

WILLIAM D. COOK P.E.
FLA P.E. #43904

FEB 0 3 2009

SYSTEM
ARCH ALUMINUM AND GLASS SERIES
IFG 5100 STOREFRONT WALL

MANUFACTURER
ARCH ALUMINUM AND GLASS LLC
10200 N.W. 67th STREET
TAMARAC, FLORIDA 33321
TEL. (800) 432-8132 FAX. (954) 724-9293

DATE: 9/9/08	SCALE:	DRAWN: DGI	REVISION / DATE 1 – 2/2/09	DRAWING# IFG 5100	SHEET NO. 11 OF 13

MIAMI-DADE COUNTY USE ONLY

Approved as complying with the Florida Building Code
Date MARCH 11, 2009
NOA# 08-1015.08
Miami-Dade Product Control
By Manuel Perez

AGA–1047

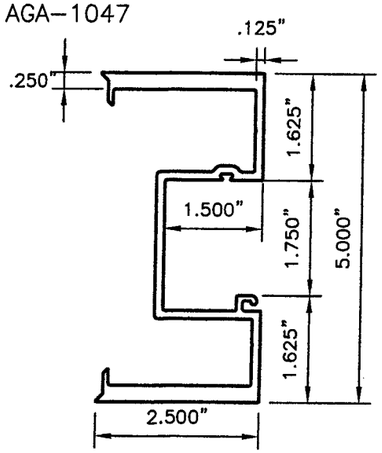

① 51501: MULLION–VERTICAL

AGA–1048

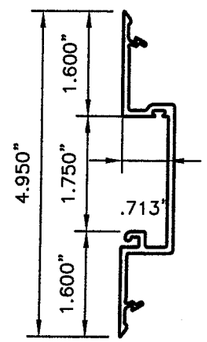

② 51506: MULLION–VERTICAL

AGA–1049

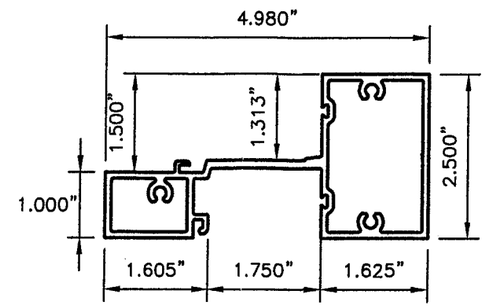

③ 51504: INT. HORIZONTAL

AGA–1050

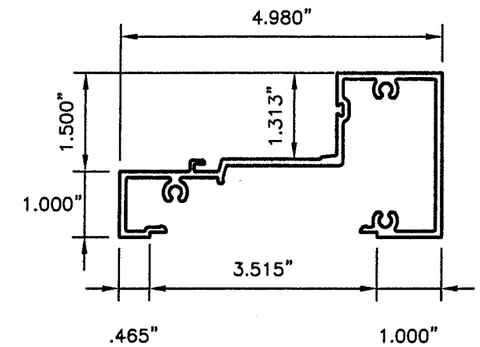

④ 51502: SILL/HEAD HORIZONTAL

AGA–1051

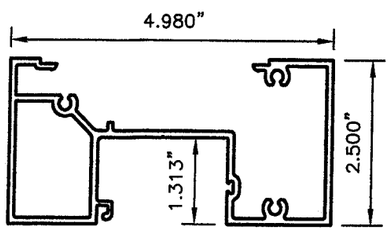

⑤ 51500: HEAD HORIZONTAL

AGA–1052

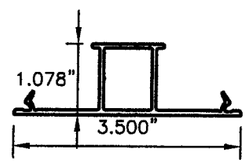

⑥ 51508: CLOSURE PIECE

AGA–1053

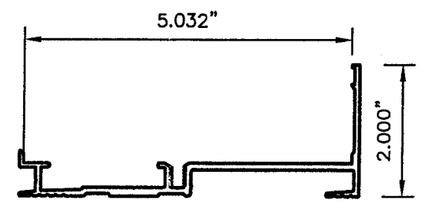

⑦ 51505: STARTER SILL

AGA–1054

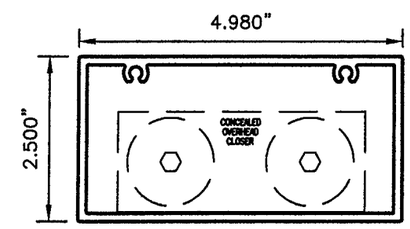

⑧ 51513: DOOR TRANSOM

AGA–999

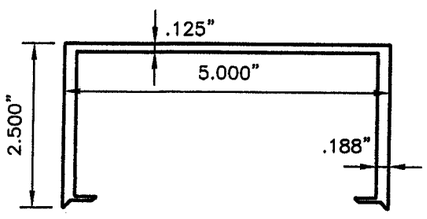

⑨ AGA–999: DOOR JAMB

AGA–1055

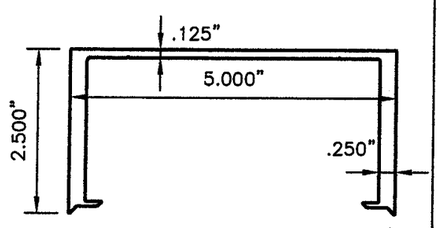

⑨A 51512: DOOR JAMB

AGA–790

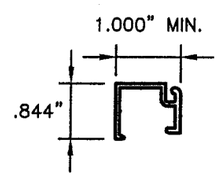

⑩ 51510: LITE STOP

AGA–1022

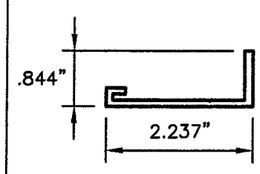

⑪ 51511: ADAPTOR

AGA–1058

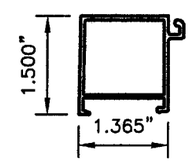

⑫ 51503: GLASS STOP

BROMLEY COOK ENGINEERING, INC.
STRUCTURAL ENGINEERING SERVICES
5440 N.W. 33RD AVENUE SUITE 100
FORT LAUDERDALE, FLORIDA 33309
TEL: (954) 772-4624 FAX: (954) 772-4634

WILLIAM D. COOK P.E.
FLA P.E. #43904

FEB 0 3 2009

SYSTEM

ARCH ALUMINUM AND GLASS SERIES
IFG 5100 STOREFRONT WALL

MANUFACTURER

ARCH ALUMINUM AND GLASS LLC
10200 N.W. 67th STREET
TAMARAC, FLORIDA 33321
TEL. (800) 432-8132 FAX. (954) 724-9293

DATE: 9/9/08	SCALE:	DRAWN: DGI	REVISION / DATE 1 – 2/2/09	DRAWING # IFG 5100	SHEET NO. 12 OF 13

MIAMI-DADE COUNTY USE ONLY

Approved as complying with the Florida Building Code
Date MARCH 11 2009
08-1015.08

BILL OF MATERIALS

ITEM NO.	PART NO.	DESCRIPTION	MATERIAL	SUPPLIER/REMARKS
1	51501	MULLION-VERTICAL	6063-T6	ARCH ALUMINUM AGA-1047
2	51506	MULLION-VERTICAL	6063-T6	ARCH ALUMINUM AGA-1048
3	51504	INT. HORIZONTAL	6063-T6	ARCH ALUMINUM AGA-1049
4	51502	SILL/HEAD HORIZONTAL	6063-T6	ARCH ALUMINUM AGA-1050
5	51500	HEAD HORIZONTAL	6063-T6	ARCH ALUMINUM AGA-1051
6	51508	CLOSURE PIECE	6063-T5	ARCH ALUMINUM AGA-1052
7	51505	STARTER SILL	6063-T5	ARCH ALUMINUM AGA-1053
8	51513	DOOR TRANSOM	6063-T6	ARCH ALUMINUM AGA-1054
9	AGA-999	DOOR JAMB	6063-T6	ARCH ALUMINUM AGA-999
9A	51512	DOOR JAMB (OPTION)	6063-T6	ARCH ALUMINUM AGA-1055
10	AGA-790	FIXED LITE STOP	6063-T5	ARCH ALUMINUM AGA-790/AGA-1056
11	AGA-1022	GLAZING ADAPTOR	6063-T5	ARCH ALUMINUM AGA-1022/AGA-1057
12	51503	GLASS STOP	6063-T5	ARCH ALUMINUM AGA-1058
M1	H-63	WEDGE GASKET	EPDM	---
M2	DC-995	STRUCT'L SILICONE SEALANT	SILICONE	DOW CORNING
	SSG-4000	STRUCT'L SILICONE SEALANT	SILICONE	G.E.
		STRUCT'L SILICONE SEALANT	SILICONE	TREMCO
M3	V2100	VINYL FOAM TAPE 0.375"x0.250"	FOAM	NORTON
M4	-----	0.75 THK x1.375 SETTING BLOCK	EPDM	---
M5	-----	0.25 THK x1.375 SETTING BLOCK	EPDM	---
M6	-----	#12 x 1 ½" LG PPH MACH.SCW	S/S	---
M7	-----	BACKING GASKET		---

BROMLEY COOK ENGINEERING, INC.
STRUCTURAL ENGINEERING SERVICES
5440 N.W. 33RD AVENUE SUITE 100
FORT LAUDERDALE, FLORIDA 33309
TEL: (954) 772-4624 FAX: (954) 772-4634

WILLIAM D. COOK P.E.
FLA P.E. #43904

FEB 03 2009

SYSTEM
ARCH ALUMINUM AND GLASS SERIES
IFG 5100 STOREFRONT WALL

MANUFACTURER
ARCH ALUMINUM AND GLASS LLC
10200 N.W. 67th STREET
TAMARAC, FLORIDA 33321
TEL. (800) 432-8132 FAX. (954) 724-9293

DATE: 9/9/08	SCALE:	DRAWN: DGI	REVISION / DATE 1 - 2/2/09
DRAWING# IFG 5100	SHEET NO. 13 OF 13		

MIAMI-DADE COUNTY USE ONLY

Approved as complying with the Florida Building Code
Date MARCH 11, 2009
NOA # 08-1015.08
Miami-Dade Product Control
By Manuel Perez