MIAMI-DADE COUNTY
BUILDING CODE COMPLIANCE OFFICE (BCCO)
PRODUCT CONTROL DIVISION

MIAMI-DADE COUNTY, FLORIDA
METRO-DADE FLAGLER BUILDING
140 WEST FLAGLER STREET, SUITE 1603
MIAMI, FLORIDA 33130-1563
(305) 375-2901 FAX (305) 372-6339
www.miamidade.gov/buildingcode

NOTICE OF ACCEPTANCE (NOA)

Regency Plus, Inc.
1024 Locust Gap Highway
Mount Carmel, PA 17851

SCOPE:

This NOA is being issued under the applicable rules and regulations governing the use of construction materials. The documentation submitted has been reviewed by Miami-Dade County Product Control Division and accepted by the Board of Rules and Appeals (BORA) to be used in Miami Dade County and other areas where allowed by the Authority Having Jurisdiction (AHJ).

This NOA shall not be valid after the expiration date stated below. The Miami-Dade County Product Control Division (In Miami Dade County) and/or the AHJ (in areas other than Miami Dade County) reserve the right to have this product or material tested for quality assurance purposes. If this product or material fails to perform in the accepted manner, the manufacturer will incur the expense of such testing and the AHJ may immediately revoke, modify, or suspend the use of such product or material within their jurisdiction. BORA reserves the right to revoke this acceptance, if it is determined by Miami-Dade County Product Control Division that this product or material fails to meet the requirements of the applicable building code.

This product is approved as described herein, and has been designed to comply with the Florida Building Code, including the High Velocity Hurricane Zone.

DESCRIPTION: Series 5108 PVC Fixed Window – L.M.I.

APPROVAL DOCUMENT: Drawing No. **RPLS0060**, titled "Impact 5108 Series Fixed Window" sheets 1 through 5 of 5, dated 09/16/08, with revision A dated 12/02/08, prepared by PTC, LLC, signed and sealed by Paul E. Winter, P.E., bearing the Miami-Dade County Product Control approval stamp with the Notice of Acceptance number and approval date by the Miami-Dade County Product Control Division.

MISSILE IMPACT RATING: Large and Small Missile Impact Resistant

LABELING: Each unit shall bear a permanent label with the manufacturer's name or logo, city, state and following statement: "Miami-Dade County Product Control Approved", unless otherwise noted herein.

RENEWAL of this NOA shall be considered after a renewal application has been filed and there has been no change in the applicable building code negatively affecting the performance of this product.

TERMINATION of this NOA will occur after the expiration date or if there has been a revision or change in the materials, use, and/or manufacture of the product or process. Misuse of this NOA as an endorsement of any product, for sales, advertising or any other purposes shall automatically terminate this NOA. Failure to comply with any section of this NOA shall be cause for termination and removal of NOA.

ADVERTISEMENT: The NOA number preceded by the words Miami-Dade County, Florida, and followed by the expiration date may be displayed in advertising literature. If any portion of the NOA is displayed, then it shall be done in its entirety.

INSPECTION: A copy of this entire NOA shall be provided to the user by the manufacturer or its distributors and shall be available for inspection at the job site at the request of the Building Official.

This NOA consists of this page 1 and evidence page E-1, as well as approval document mentioned above.

The submitted documentation was reviewed by **Carlos M. Utrera, P.E.**

MIAMI-DADE COUNTY APPROVED

1/8/09

NOTICE OF ACCEPTANCE: EVIDENCE SUBMITTED

A. DRAWINGS

1. Drawing No. **RPLS0060**, titled "Impact 5108 Series Fixed Window" sheets 1 through 5 of 5, dated 09/16/08, with revision "A" dated 12/02/08, prepared by PTC, LLC, signed and sealed by Paul E. Winter, P.E.

B. TESTS

1. Test reports on 1) Air Infiltration Test, per FBC, TAS 202-94
   2) Uniform Static Air Pressure Test, Loading per FBC TAS 202-94
   3) Water Resistance Test, per FBC, TAS 202-94
   4) Large Missile Impact Test per FBC, TAS 201-94
   5) Cyclic Wind Pressure Loading per FBC, TAS 203-94
   6) Forced Entry Test, per FBC 2411 3.2.1, TAS 202-94

   along with marked-up drawings and installation diagram of Regency Plus, Inc.'s Series 5108 Fixed Windows, prepared by National Certified Testing Laboratories, Test Report No. **NCTL-110-11363-1**, dated 05/15/08, signed and sealed by Harold E. Rupp, P.E.

C. CALCULATIONS

1. Anchor verification calculations and structural analysis prepared by PTC, LLC, complying with F.B.C 2007, dated 09/15/08, signed and sealed by Paul E. Winter, P.E.

   Complies with ASTM E1300-04

D. QUALITY ASSURANCE

1. Miami Dade Building Code Compliance Office (BCCO).

E. MATERIAL CERTIFICATIONS

1. Notice of Acceptance No. **07-1016.05,** issued to Dominion Plastics, Inc., for their White Rigid PVC Exterior Extrusions, approved on 11/15/07 and expiring on 10/24/12.

F. STATEMENTS

1. Statement letter of code conformance and no financial interest, issued by PTC, LLC, dated 10/10/08, signed and sealed by Paul E. Winter, P.E.
2. Laboratory code compliance statement, issued by National Certified Testing Laboratories for Test Report No. **NCTL-110-11363-1**, dated 05/15/08, signed and sealed by Harold E. Rupp, P.E.

1/8/09

Carlos M. Utrera, P.E.
Product Control Examiner
NOA No. 08-1021.04
Expiration Date: January 28, 2014
Approval Date: January 28, 2009

REGENCY PLUS, INC.

IMPACT 5108 SERIES FIXED WINDOW

INSTALLATION ANCHORAGE DETAILS

GENERAL NOTES:

1. THE PRODUCT ANCHORAGE SHOWN HEREIN IS DESIGNED TO COMPLY WITH THE CURRENT FLORIDA BUILDING CODE (FBC) AT THE DESIGN PRESSURES STATED HEREIN.

2. THE PRODUCT DETAILS CONTAINED HEREIN ARE BASED UPON SIGNED AND SEALED TEST REPORT # NCTL-110-11363-1 DATED 05/15/08 AND ASSOCIATED LABORATORY STAMPED DRAWINGS AND WERE TESTED IN ACCORDANCE WITH CURRENT DADE COUNTY PROTOCOLS.

3. THE PRODUCT HAS BEEN EVALUATED FOR CONFORMANCE TO THE STANDARDS LISTED IN THE CURRENT FLORIDA BUILDING CODE (FBC) AND IS IN COMPLIANCE WITH SAID STANDARDS, INCLUDING HIGH VELOCITY HURRICANE ZONE (HVHZ) REQUIREMENTS.

4. ADEQUACY OF THE EXISTING STRUCTURAL CONCRETE MASONRY AND 2X FRAMING AS A MAIN WIND FORCE RESISTING SYSTEM CAPABLE OF WITHSTANDING AND TRANSFERRING APPLIED PRODUCT LOADS TO THE STRUCTURE IS THE RESPONSIBILITY OF THE ENGINEER OR ARCHITECT OF RECORD.

5. 1X AND 2X BUCKS (WHEN USED) SHALL BE DESIGNED AND ANCHORED TO PROPERLY TRANSFER ALL LOADS TO THE STRUCTURE. BUCK DESIGN AND INSTALLATION IS THE RESPONSIBILITY OF THE ENGINEER OR ARCHITECT OF RECORD.

6. THE INSTALLATION DETAILS DESCRIBED HEREIN ARE GENERIC AND MAY NOT REFLECT ACTUAL CONDITIONS FOR A SPECIFIC SITE. IF SITE CONDITIONS CAUSE INSTALLATION TO DEVIATE FROM THE REQUIREMENTS DETAILED HEREIN, THEN THE BUILDING OFFICIAL MAY ELECT ONE OF THE FOLLOWING OPTIONS:

   A. OUTSIDE HVHZ: REQUIRE THAT A LICENSED ENGINEER OR ARCHITECT PREPARE AND SUBMIT SITE SPECIFIC DOCUMENTS FOR USE WITH THIS DOCUMENT.
   B. INSIDE HVHZ: REQUIRE THAT A ONE-TIME SITE SPECIFIC APPROVAL BE APPLIED FOR AND OBTAINED FROM THE MIAMI-DADE COUNTY PRODUCT CONTROL DIVISION.

7. THIS PRODUCT DOES NOT REQUIRE THE USE OF A DADE COUNTY APPROVED IMPACT SYSTEM.

8. WINDOW FRAME MATERIAL: WHITE RIGID PVC (A) (NOA # 07-1016.05)

9. GLASS MEETS THE REQUIREMENTS OF ASTM E1300. SEE SHEET 3 FOR GLAZING DETAIL. (A)

10. DESIGNATION "O" STANDS FOR THE FOLLOWING: O: FIXED PANEL

11. A 1/3 INCREASE IN ALLOWABLE STRESS FOR WIND LOADS WAS NOT USED IN THE DESIGN OF THE PRODUCT(S) SHOWN HEREIN. WIND LOAD DURATION FACTOR (Cd = 1.6) HAS BEEN USED FOR WOOD ANCHOR DESIGN.

12. EACH WINDOW ASSEMBLY SHALL BE LABELED WITH A PERMANENT LABEL AND/OR STAMP WITH THE EXTRUDER CODE AND "MDCA".

DESIGN PRESSURE RATING (PSF)	IMPACT RATING
±55.0 PSF	LARGE MISSILE IMPACT

INSTALLATION NOTES:

1. ONE (1) INSTALLATION ANCHOR IS REQUIRED AT EACH ANCHOR LOCATION SHOWN.

2. THE NUMBER OF INSTALLATION ANCHORS DEPICTED IS THE MINIMUM NUMBER OF ANCHORS TO BE USED FOR PRODUCT INSTALLATION.

3. SHIM AS REQUIRED AT EACH INSTALLATION ANCHOR WITH LOAD BEARING SHIM(S). MAXIMUM ALLOWABLE SHIM SIZE IS 1/4 INCH. SHIM WHERE SPACE OF 1/16 INCH OR GREATER OCCURS. SHIM(S) SHALL BE CONSTRUCTED OF HIGH DENSITY PLASTIC OR BETTER.

4. FOR INSTALLATION INTO WOOD FRAMING, USE #12 WOOD SCREWS OF SUFFICIENT LENGTH TO ACHIEVE 1 1/2 INCH MINIMUM EMBEDMENT. MINIMUM EDGE DISTANCE IS 3/4 INCHES.

5. FOR INSTALLATION THROUGH 1X BUCK TO CONCRETE / MASONRY, OR DIRECTLY INTO CONCRETE / MASONRY, USE 3/16 INCH ITW TAPCONS OF SUFFICIENT LENGTH TO ACHIEVE 1 1/4 INCH MINIMUM EMBEDMENT. MINIMUM EDGE DISTANCE IS 2 1/2 INCHES.

6. INSTALLATION ANCHORS ARE TO BE LOCATED THROUGH PERIMETER OF NAILING FIN WHEN APPLICABLE .

7. MINIMUM EMBEDMENT AND EDGE DISTANCE EXCLUDE WALL FINISHES, INCLUDING BUT NOT LIMITED TO STUCCO, FOAM, BRICK VENEER AND SIDING.

8. INSTALLATION ANCHORS AND ASSOCIATED HARDWARE MUST BE MADE OF CORROSION RESISTANT MATERIAL OR HAVE A CORROSION RESISTANT COATING.

9. FOR HOLLOW BLOCK AND GROUT FILLED BLOCK, DO NOT INSTALL INSTALLATION ANCHORS INTO MORTAR JOINTS. EDGE DISTANCE IS MEASURED FROM FREE EDGE OF BLOCK OR EDGE OF MORTAR JOINT INTO FACE SHELL OF BLOCK.

10. INSTALLATION ANCHORS SHALL BE INSTALLED IN ACCORDANCE WITH ANCHOR MANUFACTURER'S INSTALLATION INSTRUCTIONS AND ANCHORS SHALL NOT BE USED IN SUBSTRATES WITH STRENGTHS LESS THAN THE MINIMUM STRENGTH SPECIFIED BY THE ANCHOR MANUFACTURER.

11. INSTALLATION ANCHOR CAPACITIES FOR PRODUCTS HEREIN ARE BASED ON SUBSTRATE MATERIALS WITH THE FOLLOWING PROPERTIES:

    (A) A. WOOD - SOUTHERN YELLOW PINE - MINIMUM SPECIFIC GRAVITY OF 0.55.
    B. CONCRETE -MINIMUM COMPRESSIVE STRENGTH OF 3192 psi.
    C.MASONRY - STRENGTH CONFORMANCE TO ASTM C-90, GRADE N, TYPE 1 (OR GREATER).

(A) TABLE OF CONTENTS

SHEET	REV.	SHEET DESCRIPTION
1	A	GENERAL NOTES, INSTALLATION NOTES & D.P. CHART
2	A	ELEVATION AND ANCHOR LAYOUTS
3	A	HORIZONTAL & VERTICAL SECTIONS & GLAZING DETAIL - OPT. INSTALLATION
4	A	HORIZONTAL & VERTICAL SECTIONS - PARTING STOP INSTALLATION
5	A	COMPONENTS, BILL OF MATERIALS & CORNER SECTION

REV	DESCRIPTION	DATE	BY
A	PER MIAMI-DADE 11-15-08	12/2/08	SMC

APPROVED BY: PAUL E. WINTER
DATE: 10/09/08

REGENCY PLUS, INC.
1024 LOCUST GAP HIGHWAY
MT. CARMEL, PA 17851

TITLE: IMPACT 5108 SERIES FIXED WINDOW
GENERAL NOTES, INSTALLATION NOTES & D.P. CHART

PREPARED BY: PTC, LLC Phone 321.690.1788 Fax 321.690.1789

DRAWN BY: BB
DATE: 09/16/08
SCALE: N.T.S.
DRAWING NO: RPLS0060
REV: A
SHEET: 1 OF 5

PROJECT #308-0739.21

Paul E. Winter
Florida P.E. No. 22693
12/12/08
PTC, LLC
1535 N. Cogswell Street, Suite C25
Rockledge, Florida 32955
FBPE Certificate of Authorization NO. 25935

Approved as complying with the Florida Building Code
Date 01/28/2009
NOA# 08-1021.04
Miami Dade Product Control Division
By

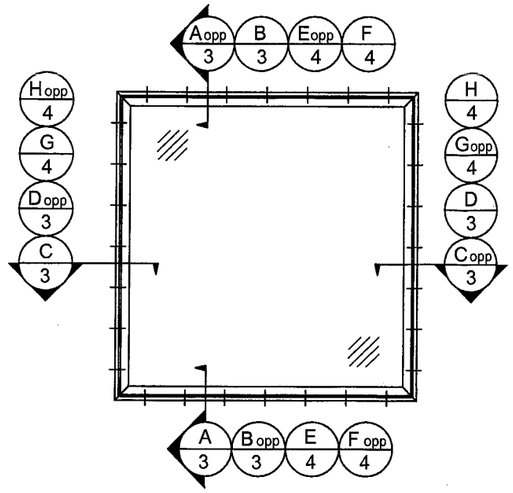

ELEVATION

EXTERIOR VIEW

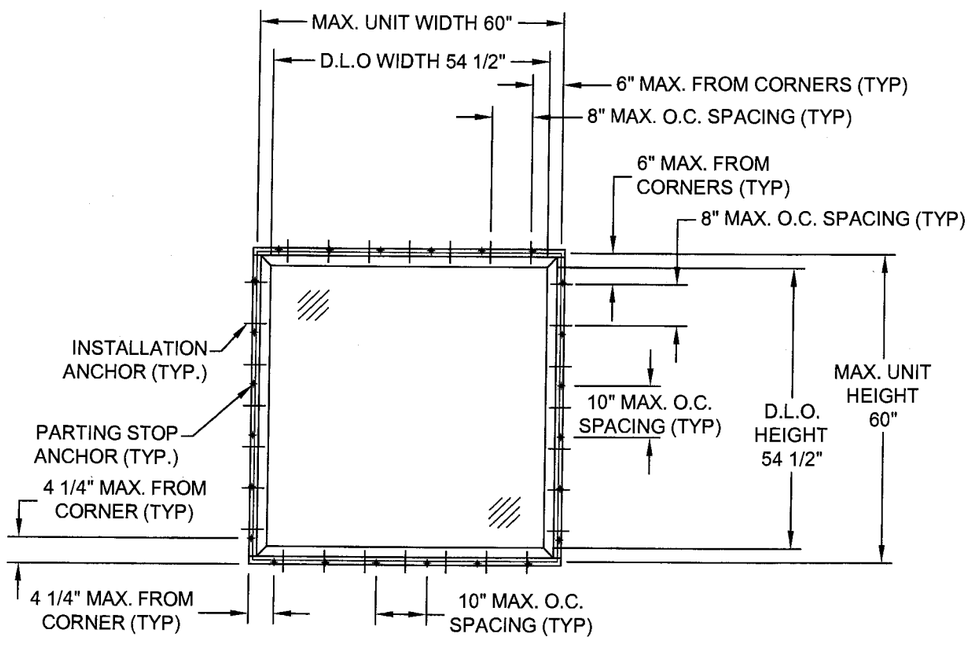

ANCHOR LAYOUT

PARTING STOP INSTALLATION
EXTERIOR VIEW

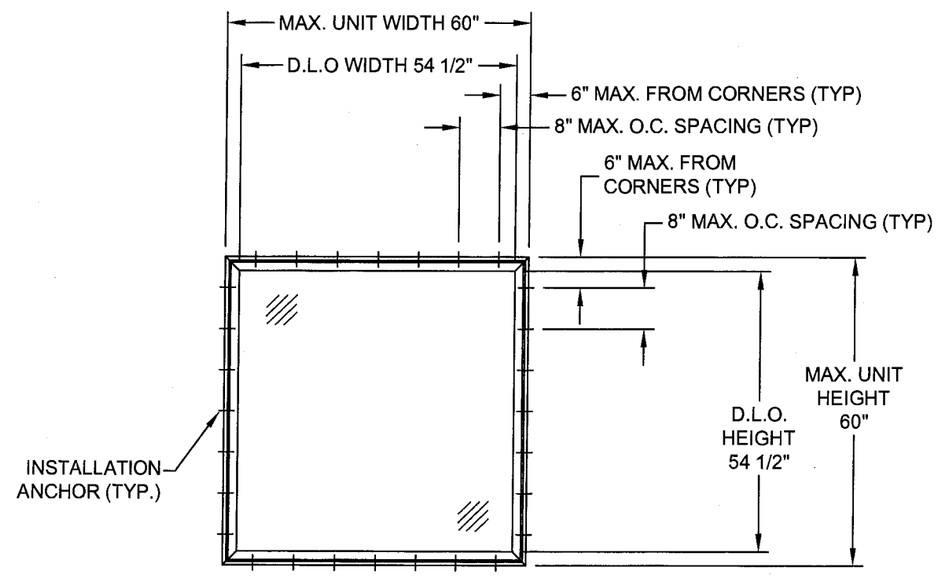

ANCHOR LAYOUT

OPTIONAL INSTALLATION
EXTERIOR VIEW

REV	DESCRIPTION	DATE	BY
A	PER MIAMI-DADE 11/15/08	12/2/08	SMC

APPROVED BY: PAUL E. WINTER
DATE: 10/09/08

REGENCY PLUS, INC.
1024 LOCUST GAP HIGHWAY
MT. CARMEL, PA 17851

TITLE: IMPACT 5108 SERIES FIXED WINDOW ELEVATION AND ANCHOR LAYOUTS

PREPARED BY:
PTC, LLC
Phone 321.690.1788
Fax 321.690.1789

DRAWN BY: BB
DATE: 09/16/08
SCALE: N.T.S.
DRAWING NO: RPLS0060
REV: A
SHEET: 2 OF 5

PROJECT #308-0739.21

Paul E. Winter
Florida P.E. No. 22693
12/2/08

PTC, LLC
1535 N. Cogswell Street, Suite C25
Rockledge, Florida 32955
FBPE Certificate of Authorization NO. 25935

Approved as complying with the Florida Building Code
Date 01/28/2009
NOA# 08-1021.04
Miami Dade Product Control Division
By

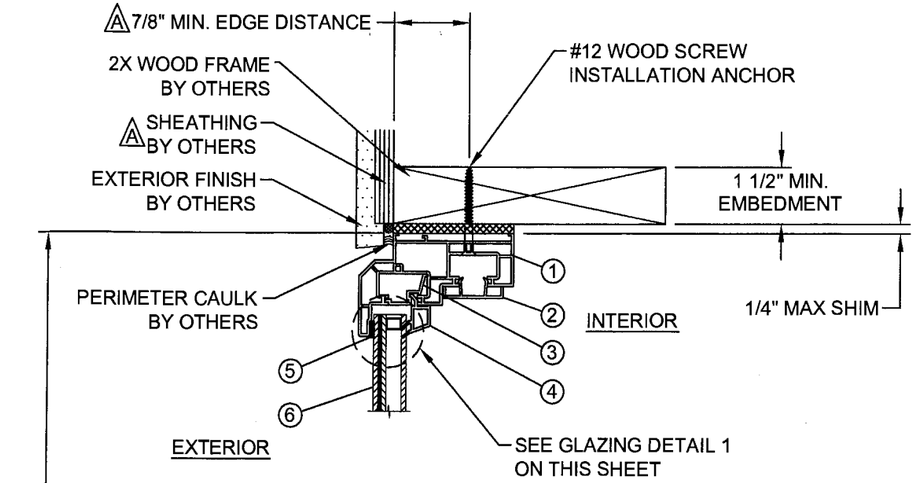

B VERTICAL SECTION
OPTIONAL INSTALLATION
WOOD FRAME SUBSTRATE

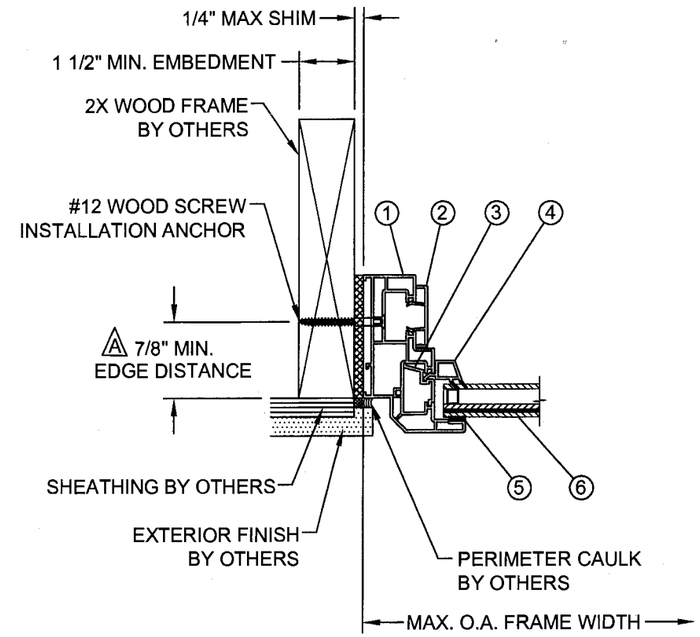

C HORIZONTAL SECTION
OPTIONAL INSTALLATION
WOOD FRAME SUBSTRATE

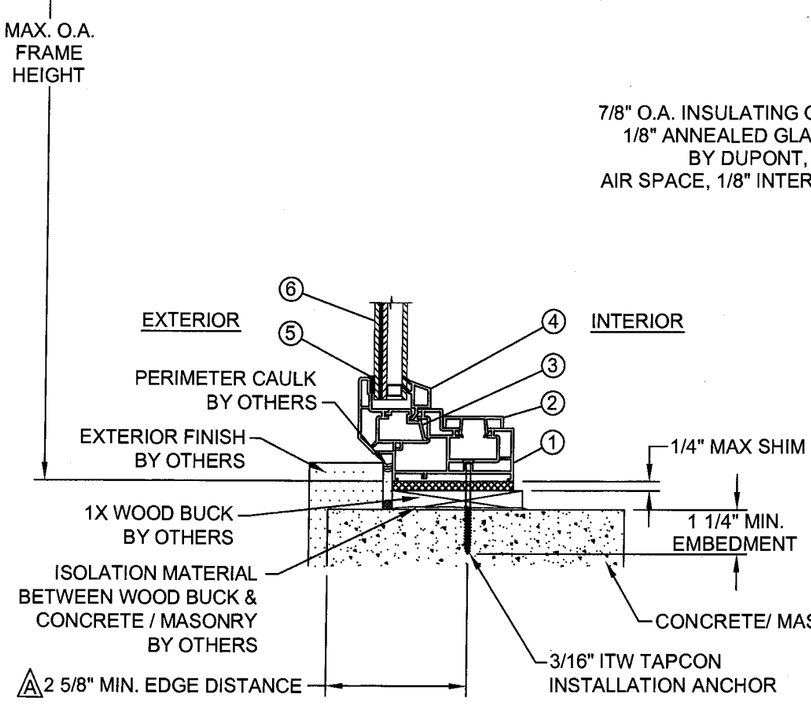

A VERTICAL SECTION
OPTIONAL INSTALLATION
CONCRETE SUBSTRATE

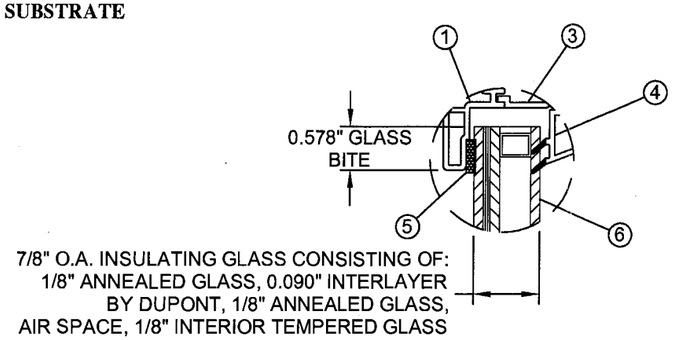

GLAZING DETAIL 1

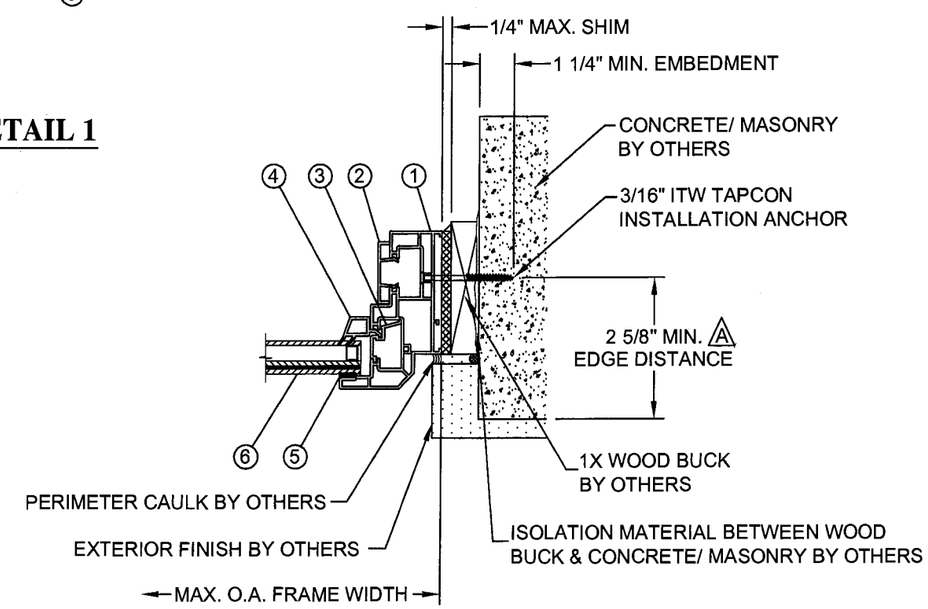

D HORIZONTAL SECTION
OPTIONAL INSTALLATION
CONCRETE / MASONRY SUBSTRATE

REV	DESCRIPTION	DATE	BY
A	PER MIAMI-DADE 11/15/08	12/2/08	SMC

APPROVED BY: PAUL E. WINTER
DATE: 10/09/08

REGENCY PLUS, INC.
1024 LOCUST GAP HIGHWAY
MT. CARMEL, PA 17851

TITLE: IMPACT 5108 SERIES FIXED WINDOW
HORIZONTAL & VERTICAL SECT. & GLAZING DETAIL OPT. INSTALL.

PREPARED BY:
PTC, LLC
Phone 321.690.1788
Fax 321.690.1789

DRAWN BY: BB
DATE: 09/16/08
SCALE: N.T.S.
DRAWING NO: RPLS0060
REV: A
SHEET: 3 OF 5

PROJECT #308-0739.21

Paul E. Winter
Florida P.E. No. 42663
PTC, LLC
1535 N. Cogswell Street, Suite C25
Rockledge, Florida 32955
FBPE Certificate of Authorization NO. 25935

Approved as complying with the Florida Building Code
Date 11/28/2009
Product 08-1021.04
Miami Dade Product Control Division
By

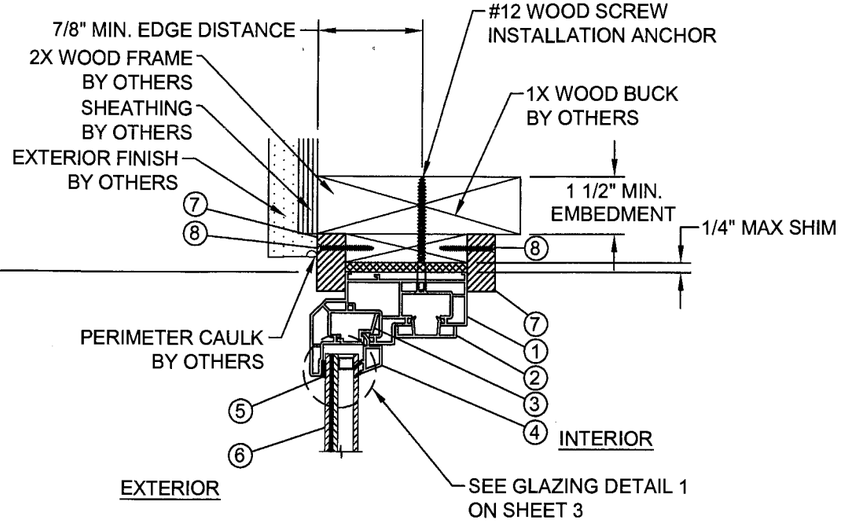

F VERTICAL SECTION
PARTING STOP INSTALLATION
WOOD FRAME SUBSTRATE

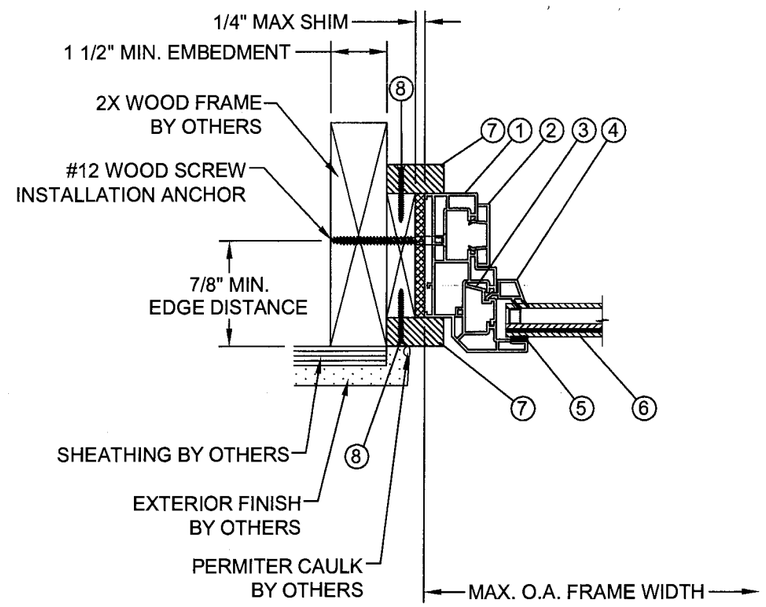

G HORIZONTAL SECTION
PARTING STOP INSTALLATION
WOOD FRAME SUBSTRATE

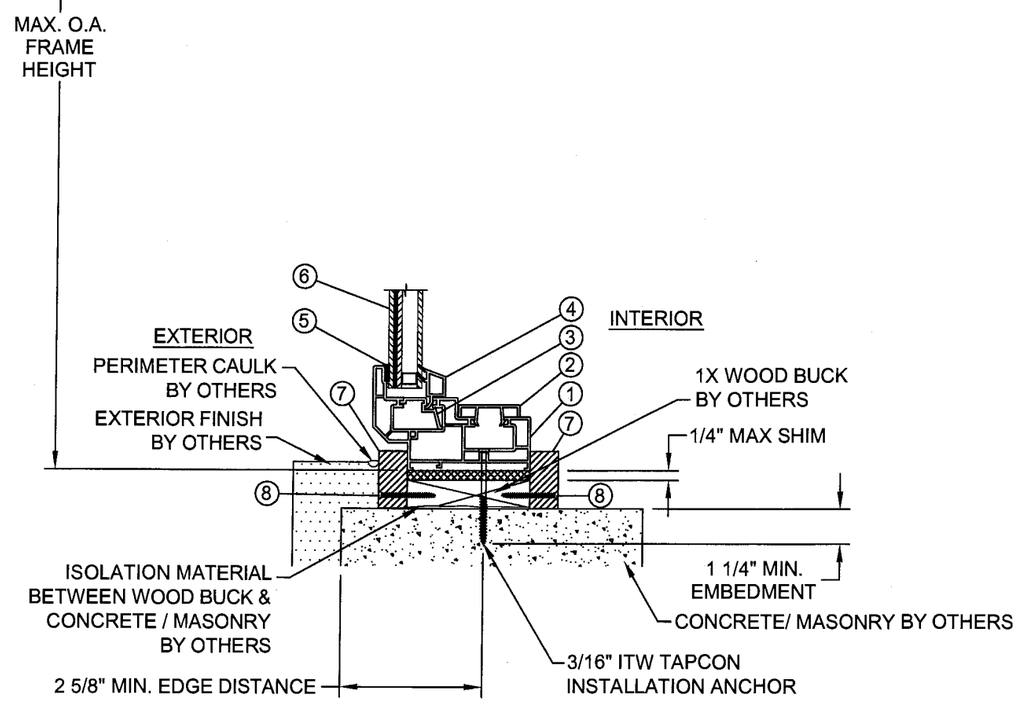

E VERTICAL SECTION
PARTING STOP INSTALLATION
CONCRETE SUBSTRATE

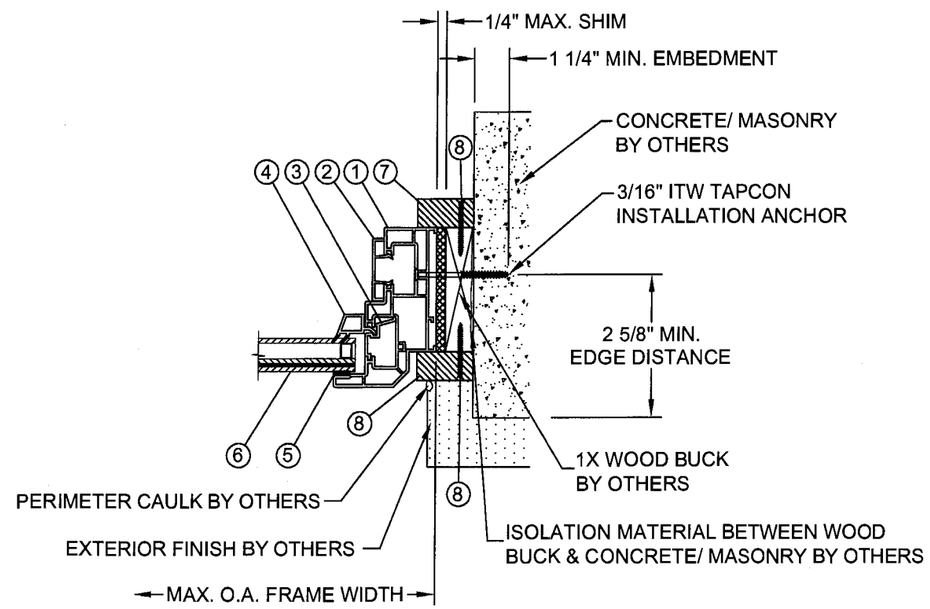

H HORIZONTAL SECTION
PARTING STOP INSTALLATION
CONCRETE / MASONRY SUBSTRATE

REV	DESCRIPTION	DATE	BY
A	PER MIAMI-DADE 11/15/08	12/2/08	SMC

APPROVED BY: PAUL E. WINTER
DATE: 10/09/08

REGENCY PLUS, INC.
1024 LOCUST GAP HIGHWAY
MT. CARMEL, PA 17851

TITLE: IMPACT 5108 SERIES FIXED WINDOW HORIZONTAL & VERTICAL SECTIONS - PARTING STOP INSTALL.

PREPARED BY: PTC, LLC Phone 321.690.1788 Fax 321.690.1789

DRAWN BY: BB
DATE: 09/16/08
SCALE: N.T.S.
DRAWING NO: RPLS0060
REV: A
SHEET: 4 OF 5

PROJECT #308--0739.21

Paul E. Winter
Florida P.E. No. 22693
12/12/08

PTC, LLC
1535 N. Cogswell Street, Suite C25
Rockledge, Florida 32955
FBPE Certificate of Authorization No. 25935

Approved as complying with the Florida Building Code
Date 01/28/2009
NOA# 08-1021.04
Miami-Dade County Product Control
Division
By

① MAIN FRAME
0.070" TYPICAL WALL THICKNESS

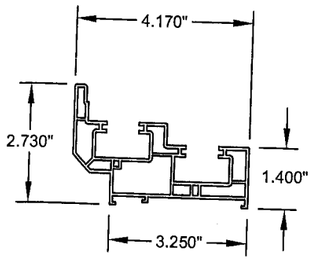

② FRAME COVER
0.070" TYPICAL WALL THICKNESS

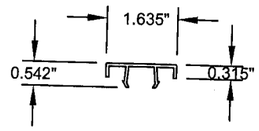

③ POCKET INSERT
0.070" TYPICAL WALL THICKNESS

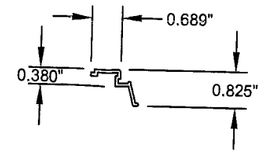

④ GLASS STOP
0.070" TYPICAL WALL THICKNESS

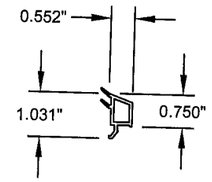

⑧ PARTING STOP
Ⓐ

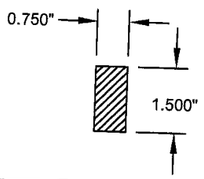

SYM #	PART #	DESCRIPTION	MATERIAL	MANUFACTURER
Ⓐ 1	IV-1060	MAIN FRAME	WHITE RIGID PVC	DOMINION PLASTICS
Ⓐ 2	IV-1070	FRAME COVER	WHITE RIGID PVC	DOMINION PLASTICS
Ⓐ 3	IV-1079	POCKET INSERT	WHITE RIGID PVC	DOMINION PLASTICS
Ⓐ 4	IV-1103	GLASS STOP	WHITE RIGID PVC	DOMINION PLASTICS
5	IV-1070	SIKA FLEX 552 SILICONE BACK BEDDING	SILICONE	SIKA
Ⓐ 6	-----	7/8" O.A. INSULATING GLASS CONSISTING OF: 1/8" INTERIOR TEMPERED GLASS, AIR SPACE, 1/8" ANNEALED GLASS, 0.090" INTERLAYER BY DUPONT, 1/8" ANNEALED GLASS	GLASS	-----
Ⓐ 7	-----	1 1/2" X 3/4" PARTING STOP	WOOD	-----
Ⓐ 8	-----	#6 X 1 5/8" SCREW	STEEL	-----

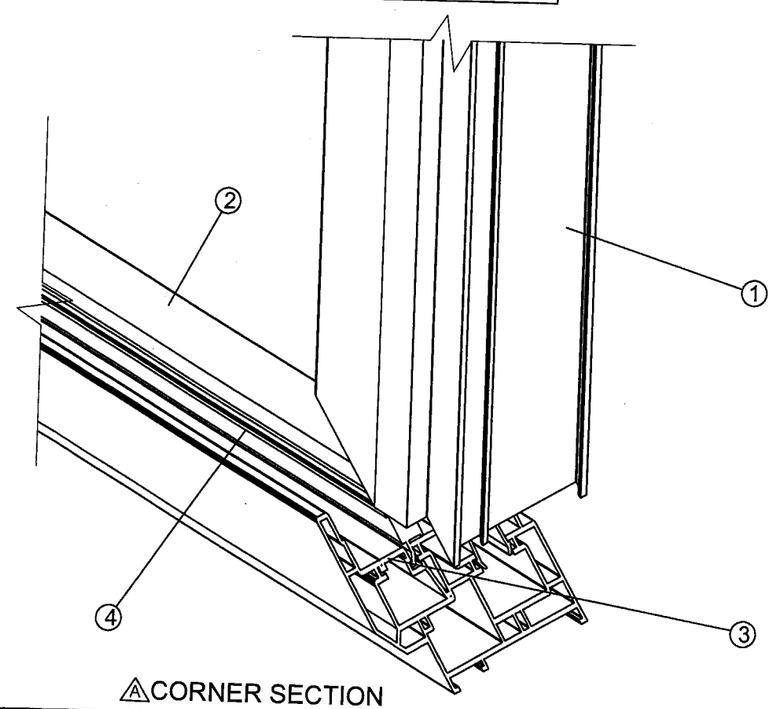

Ⓐ CORNER SECTION

REV	DESCRIPTION	DATE	BY
A	PER MIAMI-DADE 11/15/08	12/2/08	SMC

APPROVED BY: PAUL E. WINTER
DATE: 10/09/08

REGENCY PLUS, INC.
1024 LOCUST GAP HIGHWAY
MT. CARMEL, PA 17851

TITLE: IMPACT 5108 SERIES FIXED WINDOW COMPONETS, BILL OF MATERIALS & CORNER SECTION

PREPARED BY: PTC, LLC Phone 321.690.1788 Fax 321.690.1789

DRAWN BY: BB
DATE: 09/16/08
SCALE: N.T.S.
DRAWING NO: RPLS0060
REV: A
SHEET: 5 OF 5

PROJECT #308-0739.21

Paul E. Winter
Florida P.E. No. 26653

PTC, LLC
1535 N. Cogswell Street, Suite C25
Rockledge, Florida 32955
FBPE Certificate of Authorization NO. 25935

Approved as complying with the Florida Building Code
Date 01/28/2009
NOA# 08-1021.03
Miami Dade Product Control Division
By