MIAMI-DADE COUNTY
BUILDING CODE COMPLIANCE OFFICE (BCCO)
PRODUCT CONTROL DIVISION

MIAMI-DADE COUNTY, FLORIDA
METRO-DADE FLAGLER BUILDING
140 WEST FLAGLER STREET, SUITE 1603
MIAMI, FLORIDA 33130-1563
(305) 375-2901 FAX (305) 372-6339
www.maimidade.gov/buildingcode

NOTICE OF ACCEPTANCE (NOA)

Glasswall LLC
3550 NW 49 Street
Miami, FL 33142

SCOPE:

This NOA is being issued under the applicable rules and regulations governing the use of construction materials. The documentation submitted has been reviewed by Miami-Dade County Product Control Division and accepted by the Board of Rules and Appeals (BORA) to be used in Miami Dade County and other areas where allowed by the Authority Having Jurisdiction (AHJ).

This NOA shall not be valid after the expiration date stated below. The Miami-Dade County Product Control Division (In Miami Dade County) and/or the AHJ (in areas other than Miami Dade County) reserve the right to have this product or material tested for quality assurance purposes. If this product or material fails to perform in the accepted manner, the manufacturer will incur the expense of such testing and the AHJ may immediately revoke, modify, or suspend the use of such product or material within their jurisdiction. BORA reserves the right to revoke this acceptance, if it is determined by Miami-Dade County Product Control Division that this product or material fails to meet the requirements of the applicable building code.

This product is approved as described herein, and has been designed to comply with the Florida Building Code, including the High Velocity Hurricane Zone.

DESCRIPTION: Series 102L Aluminum Single Hung Window – L.M.I.

APPROVAL DOCUMENT: Drawing No. **W05-29**, titled "Series-102L Aluminum Single Hung Window (L.M.I.) " sheets 1 through 9 of 9, dated 06/20/05, prepared by Al-Farooq Corporation, signed and sealed by Humayoun Farooq, P.E., bearing the Miami-Dade County Product Control revision stamp with the Notice of Acceptance number and expiration date by the Miami-Dade County Product Control Division.

MISSILE IMPACT RATING: Large and Small Missile Impact Resistant

LABELING: Each unit shall bear a permanent label with the manufacturer's name or logo, city, state and following statement: "Miami-Dade County Product Control Approved", unless otherwise noted herein.

RENEWAL of this NOA shall be considered after a renewal application has been filed and there has been no change in the applicable building code negatively affecting the performance of this product.

TERMINATION of this NOA will occur after the expiration date or if there has been a revision or change in the materials, use, and/or manufacture of the product or process. Misuse of this NOA as an endorsement of any product, for sales, advertising or any other purposes shall automatically terminate this NOA. Failure to comply with any section of this NOA shall be cause for termination and removal of NOA.

ADVERTISEMENT: The NOA number preceded by the words Miami-Dade County, Florida, and followed by the expiration date may be displayed in advertising literature. If any portion of the NOA is displayed, then it shall be done in its entirety.

INSPECTION: A copy of this entire NOA shall be provided to the user by the manufacturer or its distributors and shall be available for inspection at the job site at the request of the Building Official.

This NOA **revises and renewal NOA # 03-0527.04** and consists of this page 1 and evidence pages E-1 and E-2, as well as approval document mentioned above.

The submitted documentation was reviewed by **Carlos M. Utrera, P.E.**

MIAMI-DADE COUNTY APPROVED

1/6/09

NOTICE OF ACCEPTANCE: EVIDENCE SUBMITTED

A. DRAWINGS

1. Drawing No. **W05-29**, titled "Series-102L Aluminum Single Hung Window (L.M.I.)" sheets 1 through 9 of 9, dated 06/20/05, prepared by Al-Farooq Corporation, signed and sealed by Humayoun Farooq, P.E.

B. TESTS

1. Test reports on 1) Uniform Static Air Pressure Test, Loading per FBC, TAS 202-94
   2) Water Resistance Test, per FBC, TAS 202-94
   3) Large Missile Impact Test per FBC, TAS 201-94
   4) Cyclic Wind Pressure Loading per FBC, TAS 203-94
   5) Forced Entry Test, per FBC 2411 3.2.1 and TAS 202-94
   6) Drop Load Test per ANSI Z97.1

   along with marked-up drawings and installation diagram of one Series 102S Aluminum Single Hung Windows Mulled together over Fixed Window, prepared by Fenestration Testing laboratory, Inc., Test Report No. **FTL-4270**, dated 09/20/04, signed and sealed by Carlos S. Rionda, P.E.

1. Test reports on 1) Large Missile Impact Test per FBC, TAS 201-94
   2) Small Missile Impact Test per FBC, TAS 201-94
   3) Cyclic Wind Pressure Loading per FBC, TAS 203-94

   along with marked-up drawings and installation diagram of one unit of O/X-O/X-O/X-O/X configuration single hung windows mulled together, prepared by Fenestration Testing laboratory, Inc., Test Report No. **FTL-3220**, dated 12/4/01, signed and sealed by Luis Antonio Figueredo, P.E.

2. Test reports on 1) Large Missile Impact Test per FBC, TAS 201-94
   2) Small Missile Impact Test per FBC, TAS 201-94
   3) Cyclic Wind Pressure Loading per FBC, TAS 203-94

   along with marked-up drawings and installation diagram of unit of O-O-O-O configuration aluminum fixed windows mulled together, prepared by Fenestration Testing laboratory, Inc., Test Report No. **FTL-3221**, dated 11/28/01, signed and sealed by Luis Antonio Figueredo, P.E.

3. Test reports on 1) Air Infiltration Test, per FBC, TAS 202-94
   2) Uniform Static Air Pressure Test, Loading per FBC, TAS 202-94
   3) Water Resistance Test, per FBC, TAS 202-94
   4) Large Missile Impact Test per FBC, TAS 201-94
   5) Cyclic Wind Pressure Loading per FBC, TAS 203-94
   6) Forced Entry Test, per FBC 2411 3.2.1 and TAS 202-94

   along with marked-up drawings and installation diagram of one unit of O-O-O/X configuration aluminum fixed and single hung windows mulled together, prepared by Fenestration Testing laboratory, Inc., Test Report No. **FTL-3222**, dated 11/26/01, signed and sealed by Luis Antonio Figueredo, P.E.

"Submitted under NOA# 02-0328.09"

1/2/09

Carlos M. Utrera, P.E.
Product Control Examiner
NOA No. 08-1021.06
Expiration Date: January 28, 2014
Approval Date: January 28, 2009

NOTICE OF ACCEPTANCE: EVIDENCE SUBMITTED

C. CALCULATIONS

1. Anchor verification calculations and structural analysis prepared by prepared by Al-Farooq Corporation, complying with F.B.C 2004/2007, dated 06/23/08, signed and sealed by Humayoun Farooq, P.E.
   Complies with ASTM E1300-02/04

D. QUALITY ASSURANCE

1. Miami Dade Building Code Compliance Office (BCCO).

E. MATERIAL CERTIFICATIONS

1. Notice of Acceptance No. **07-1116.04** issued to E.I. DuPont DeNemours for "Sentry Glass Plus" dated 01/03/08, expiring on 01/14/12.
2. Notice of Acceptance No. **06-0216.06** issued to Solutia Inc. for their "Saflex IIIG Clear or Colored Interlayer" dated 05/04/06, expiring on 05/21/11.

1. Notice of Acceptance No. **01-1204.01** issued to E.I. DuPont DeNemours for "Sentry Glass Plus" dated 01/17/02, expiring on 01/14/07.
2. Notice of Acceptance No. **01-0205.02** issued to Solutia Inc. for their "Saflex /Keepsafe Maximum" dated 05/17/01, expiring on 05/21/06.
   "Submitted under NOA# 02-0328.09"

F. STATEMENTS

1. Statement letter of conformance issued by Al-Farooq Corporation, dated 06/23/08, signed and sealed by Humayoun Farooq, P.E.
2. Statement letter of no financial interest issued by Al-Farooq Corporation, dated 06/23/08, signed and sealed by Humayoun Farooq, P.E.
3. Laboratory compliance letter issued by Fenestration Testing laboratory, Inc, for Test Reports No. **FTL-3220, 3221** and **3222**, signed and sealed by Luis A. Figueredo, P.E.

G. OTHER

1. Notice of Acceptance No. **03-0527.04**, issued to Glasswall and Doors, Inc, approved on 10/09/03 and expiring on 10/24/07.

1/6/09

Carlos M. Utrera, P.E.
Product Control Examiner
NOA No. 08-1021.06
Expiration Date: January 28, 2014
Approval Date: January 28, 2009

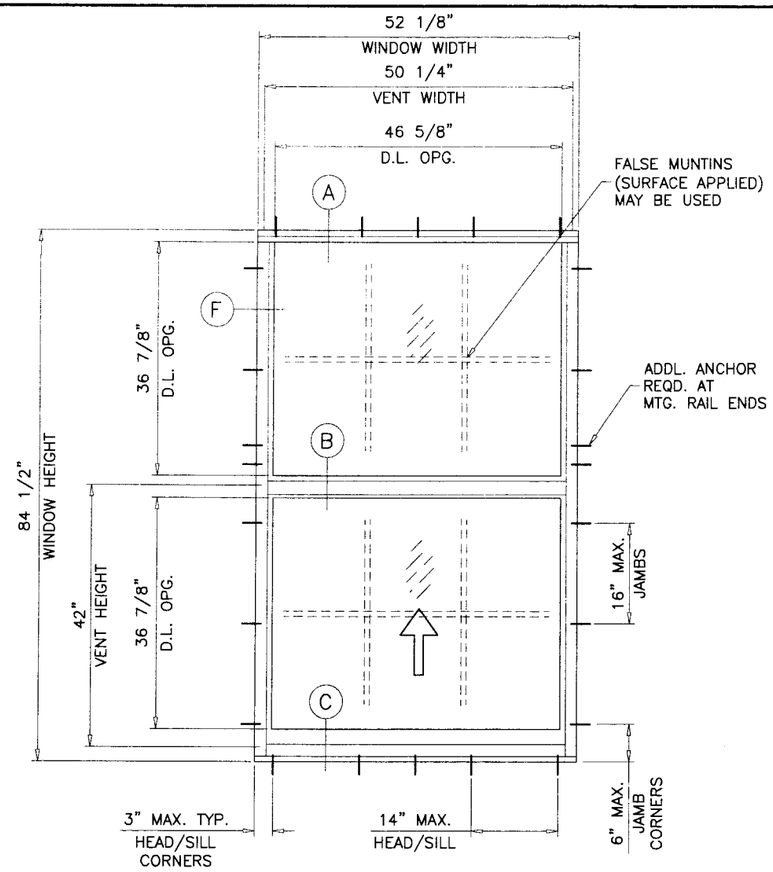

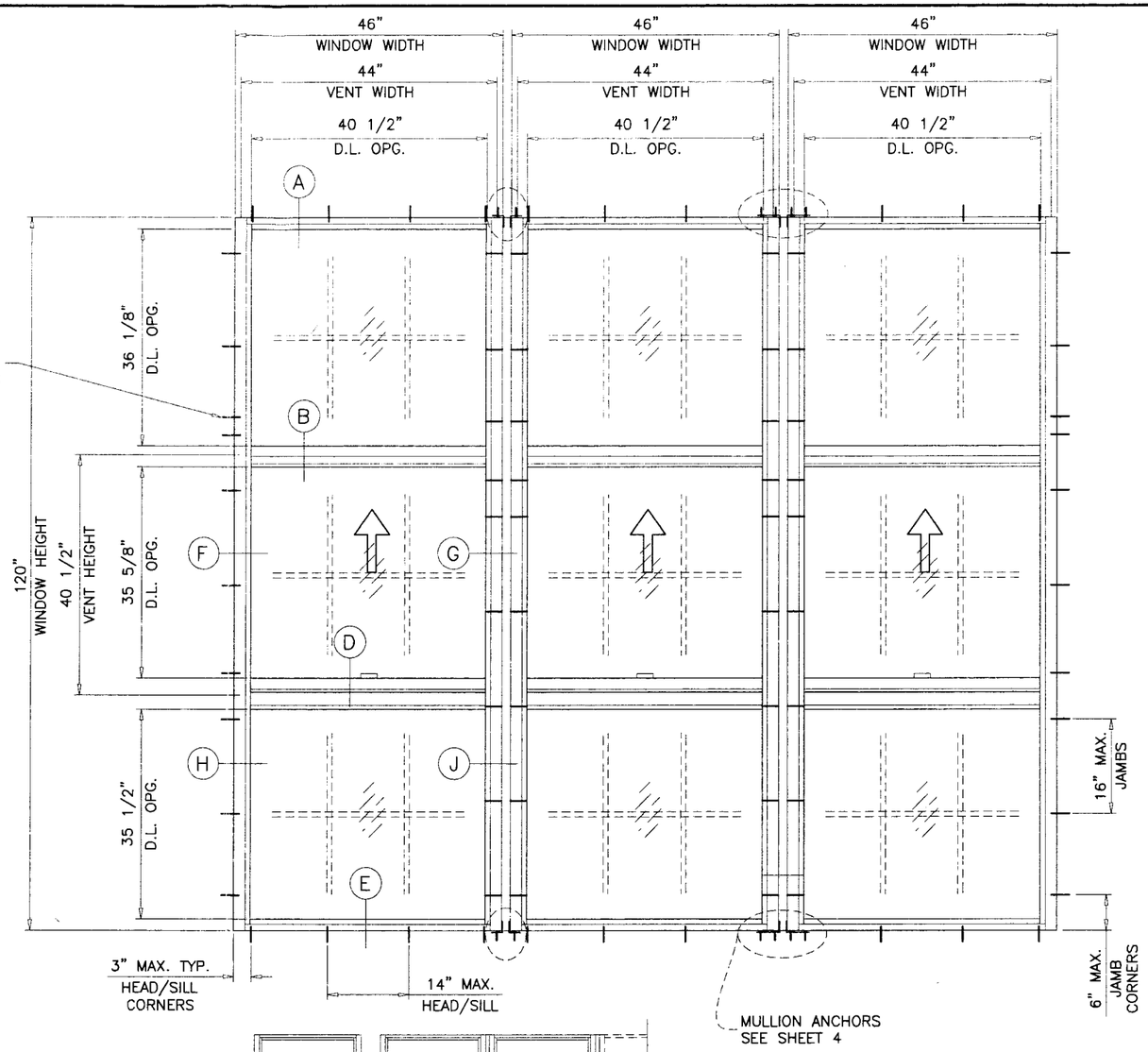

TYPICAL ELEVATIONS

TESTED UNITS

THESE WINDOWS ARE RATED FOR LARGE MISSILE IMPACT.
SHUTTERS ARE NOT REQUIRED.

SERIES-102L ALUM SINGLE HUNG WINDOW

DESIGN LOAD RATINGS FOR THESE WINDOWS TO BE AS PER CHARTS SHOWN ON SHEET 2.

THIS PRODUCT HAS BEEN DESIGNED AND TESTED TO COMPLY WITH THE REQUIREMENTS OF THE FLORIDA BUILDING CODE 2004/2007 EDITION INCLUDING HIGH VELOCITY HURRICANE ZONE (HVHZ).

WOOD BUCKS BY OTHERS, MUST BE ANCHORED PROPERLY TO TRANSFER LOADS TO THE STRUCTURE.

ANCHORS SHALL BE AS LISTED, SPACED AS SHOWN ON DETAILS, ANCHORS EMBEDMENT TO BASE MATERIAL SHALL BE BEYOND WALL DRESSING OR STUCCO.

ANCHORING OR LOADING CONDITIONS NOT SHOWN IN THESE DETAILS ARE NOT PART OF THIS APPROVAL.

A LOAD DURATION INCREASE IS USED IN DESIGN OF ANCHORS INTO WOOD ONLY.

MATERIALS INCLUDING BUT NOT LIMITED TO STEEL/METAL SCREWS, THAT COME INTO CONTACT WITH OTHER DISSIMILAR MATERIALS SHALL MEET THE REQUIREMENTS OF 2004/2007 FLORIDA BLDG. CODE SECTION 2003.8.4.

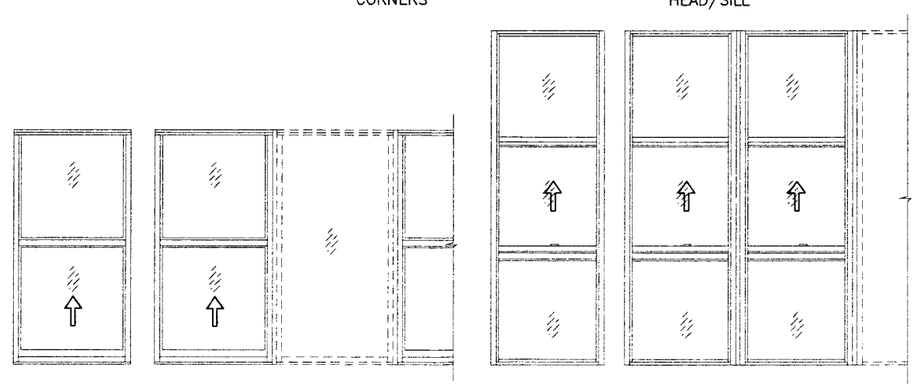

APPROVED CONFIGURATIONS

THESE WINDOWS CAN BE INSTALLED AS SINGLE UNITS OR SIDE BY SIDE COMBINATION OF TWO OR MORE UNITS USING MULLIONS IN BETWEEN.
ALSO IN COMBINATION WITH MIAMI-DADE COUNTY APPROVED SERIES 102L FIXED WINDOWS USING MULLIONS IN BETWEEN.
LOWER DESIGN PRESSURES FROM WINDOWS, MULLION OR FIX. WDW. APPROVAL WILL APPLY TO ENTIRE SYSTEM.

WINDOWS WITH GLASS TYPE 'B'
COMPLIES WITH REQUIREMENTS OF ANSI Z97.1.

Engr: DR. HUMAYOUN FAROOQ
STRUCTURES
FLA. PE # 16557
C.A.N. 3538

OCT 08 2008

PRODUCT REVISED
in complying with the Florida Building Code
Acceptance No. 08-1021.06
Expiration Date 01/29/2014
By
Miami Dade Product Control Division

AL-FAROOQ CORPORATION
ENGINEERS & PRODUCT DEVELOPMENT
1235 S.W. 87 AVE
MIAMI, FLORIDA 33174
TEL. (305) 264-8100 FAX. (305) 262-6978

COMP-ANL\W05-29GWL

SERIES-102L ALUM SINGLE HUNG WINDOW (L.M.I.)

GLASSWALL, LLC
3550 N.W. 49 STREET
MIAMI, FL. 33142
TEL. (305) 638-5151 FAX. (305) 638-5158

revisions:

no	date	by	description

date: 06-20-05
scale: 1/2"=1'-0"
dr. by: HAMID
chk. by:

drawing no.
W05-29

SINGLE HUNG WINDOWS			
DESIGN LOAD CAPACITY – PSF			
WINDOW DIMS.		GLASS TYPES 'A' & 'C'	GLASS TYPE 'B'
WIDTH	HEIGHT	EXT. (+) INT. (–)	EXT. (+) INT. (–)
19–1/8"	26"	100.0	110.0
26–1/2"		100.0	110.0
32"		100.0	110.0
37"		100.0	110.0
42"		100.0	110.0
46"		100.0	110.0
52–1/4"		100.0	110.0
19–1/8"	38–3/8"	100.0	110.0
26–1/2"		100.0	110.0
32"		100.0	110.0
37"		100.0	110.0
42"		100.0	110.0
46"		100.0	110.0
52–1/4"		100.0	110.0
19–1/8"	50–5/8"	100.0	110.0
26–1/2"		100.0	110.0
32"		100.0	110.0
37"		100.0	110.0
42"		100.0	110.0
46"		100.0	110.0
52–1/4"		100.0	93.7
19–1/8"	58"	100.0	110.0
26–1/2"		100.0	110.0
32"		100.0	110.0
37"		100.0	110.0
42"		100.0	110.0
46"		100.0	110.0
52–1/4"		100.0	84.5
19–1/8"	63"	100.0	110.0
26–1/2"		100.0	110.0
32"		100.0	110.0
37"		100.0	110.0
42"		100.0	110.0
46"		100.0	102.1
52–1/4"		100.0	79.7
19–1/8"	74–1/4"	100.0	110.0
26–1/2"		100.0	110.0
32"		100.0	110.0
37"		100.0	110.0
42"		100.0	110.0
46"		100.0	110.0
52–1/4"		100.0	–
19–1/8"	80"	100.0	110.0
26–1/2"		100.0	110.0
32"		100.0	110.0
37"		100.0	110.0
42"		100.0	110.0
46"		100.0	110.0
52–1/4"		100.0	–

SINGLE HUNG WINDOWS			
DESIGN LOAD CAPACITY – PSF			
WINDOW DIMS.		GLASS TYPES 'A' & 'C'	GLASS TYPE 'B'
WIDTH	HEIGHT	EXT. (+) INT. (–)	EXT. (+) INT. (–)
19–1/8"	84–1/2"	100.0	110.0
26–1/2"		100.0	110.0
32"		100.0	110.0
37"		100.0	110.0
42"		100.0	110.0
46"		100.0	–
52–1/4"		100.0	–

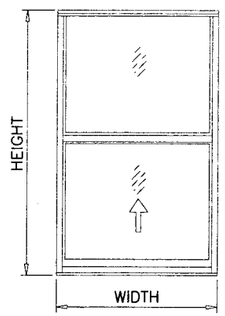

SINGLE HUNG WINDOWS

WINDOWALL BOTTOM LITE			
DESIGN LOAD CAPACITY – PSF			
WINDOW DIMS.		GLASS TYPES 'A' & 'C'	GLASS TYPE 'B'
W	H	EXT. (+) INT. (–)	EXT. (+) INT. (–)
46"	40"	100.0	100.0

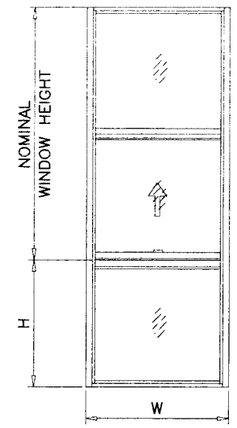

SINGLE HUNG OVER FIXED WINDOWS

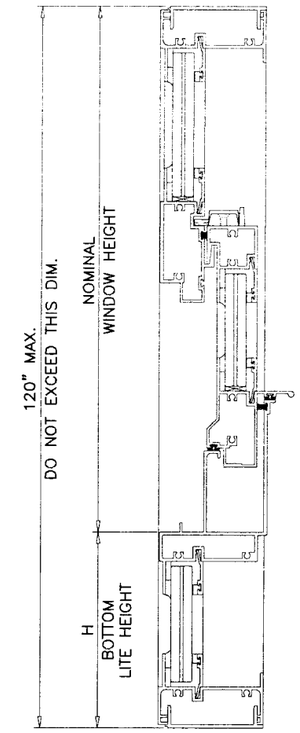

NOTE:
GLASS CAPACITIES ON THIS SHEET ARE BASED ON ASTM E1300–02 (3 SEC. GUSTS) AND FLORIDA BUILDING COMMISSION DECLARATORY STATEMENT DCA05–DEC–219

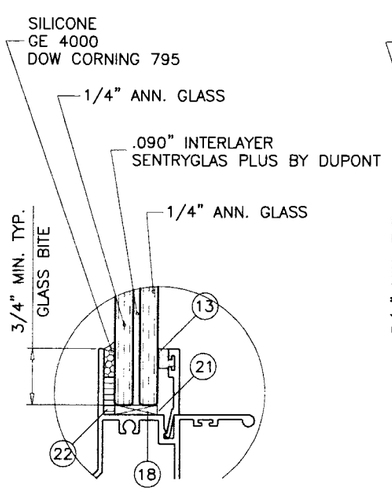

GLASS TYPE 'A'

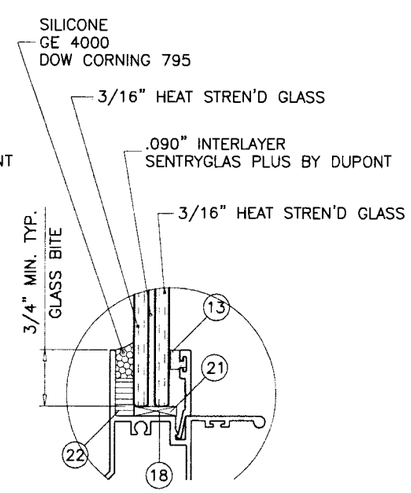

GLASS TYPE 'B'

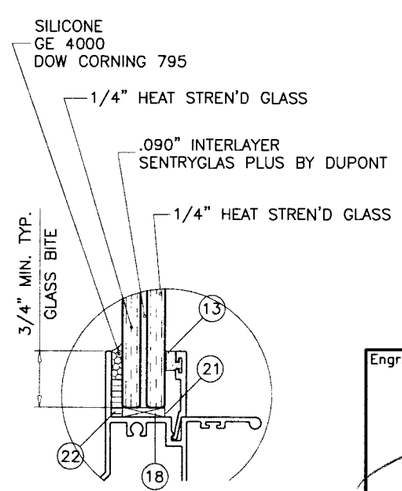

GLASS TYPE 'C'

GLAZING OPTIONS

Engr: DR. HUMAYOUN FAROOQ
STRUCTURES
FLA. PE # 16557
C.A.N. 3538

OCT 08 2008

PRODUCT REVISED
as complying with the Florida Building Code
Acceptance No 08-1021.06
Expiration Date 01/28/2014
By
Miami Dade Product Control Division

AL-FAROOQ CORPORATION
ENGINEERS & PRODUCT DEVELOPMENT
1235 S.W. 87 AVE
MIAMI, FLORIDA 33174
TEL. (305) 264-8100 FAX. (305) 262-6978

COMP–ANL\W05–29GWL

SERIES–102L ALUM SINGLE HUNG WINDOW (L.M.I.)

GLASSWALL, LLC
3550 N.W. 49 STREET
MIAMI, FL. 33142
TEL. (305) 638–5151 FAX. (305) 638–5158

revisions:

no	date	by	description

date: 06–20–05
scale: 1/2" = 1"
dr. by: HAMID
chk. by:

drawing no.
W05–29

MULLION LOAD CAPACITY - PSF				
WINDOW DIMS.		MULLION W/O REINF.	MULLION W/ 1/2" X 4" STEEL BAR	MULLION W/ 3/4" X 4" STEEL BAR
WIDTH (W)	MULL SPAN	EXT. (+) INT. (−)	EXT. (+) INT. (−)	EXT. (+) INT. (−)
19-1/8"	80"	110.0	110.0	110.0
26-1/2"		110.0	110.0	110.0
32"		110.0	110.0	110.0
37"		110.0	110.0	110.0
42"		110.0	110.0	110.0
46"		110.0	110.0	110.0
52-1/4"		110.0	110.0	110.0
19-1/8"	84-5/8"	110.0	110.0	110.0
26-1/2"		110.0	110.0	110.0
32"		110.0	110.0	110.0
37"		110.0	110.0	110.0
42"		110.0	110.0	110.0
46"		106.7	110.0	110.0
52-1/4"		93.9	110.0	110.0
19-1/8"	90"	110.0	110.0	110.0
26-1/2"		110.0	110.0	110.0
32"		110.0	110.0	110.0
37"		110.0	110.0	110.0
42"		97.2	110.0	110.0
46"		88.7	110.0	110.0
52-1/4"		78.1	110.0	110.0
19-1/8"	96"	110.0	110.0	110.0
26-1/2"		110.0	110.0	110.0
32"		105.1	110.0	110.0
37"		90.9	110.0	110.0
42"		80.1	110.0	110.0
46"		73.1	110.0	110.0
52-1/4"		64.4	110.0	110.0
19-1/8"	102"	110.0	110.0	110.0
26-1/2"		105.8	110.0	110.0
32"		87.6	110.0	110.0
37"		75.8	110.0	110.0
42"		66.7	110.0	110.0
46"		60.9	110.0	110.0
52-1/4"		53.7	99.2	110.0
19-1/8"	108"	110.0	110.0	110.0
26-1/2"		89.1	110.0	110.0
32"		73.8	110.0	110.0
37"		63.8	110.0	110.0
42"		56.2	110.0	110.0
46"		51.3	100.5	110.0
52-1/4"		45.2	88.5	110.0

MULLION LOAD CAPACITY - PSF				
WINDOW DIMS.		MULLION W/O REINF.	MULLION W/ 1/2" X 4" STEEL BAR	MULLION W/ 3/4" X 4" STEEL BAR
WIDTH (W)	MULL SPAN	EXT. (+) INT. (−)	EXT. (+) INT. (−)	EXT. (+) INT. (−)
19-1/8"	114"	105.0	110.0	110.0
26-1/2"		75.8	110.0	110.0
32"		62.7	110.0	110.0
37"		54.3	110.0	110.0
42"		47.8	98.8	110.0
46"		43.7	90.2	110.0
19-1/8"	120"	90.0	110.0	110.0
26-1/2"		65.0	110.0	110.0
32"		53.8	110.0	110.0
37"		46.5	101.2	110.0
42"		41.0	89.2	110.0
46"		37.4	81.4	106.5

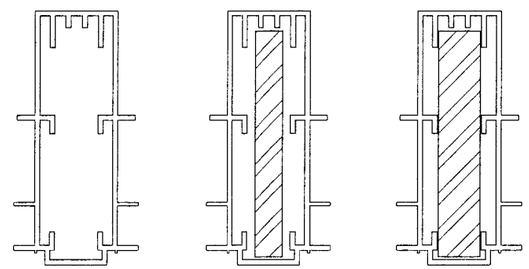

MULLION W/O REINF. | MULLION WITH 1/2" X 4" STEEL REINF. | MULLION WITH 3/4" X 4" STEEL REINF.

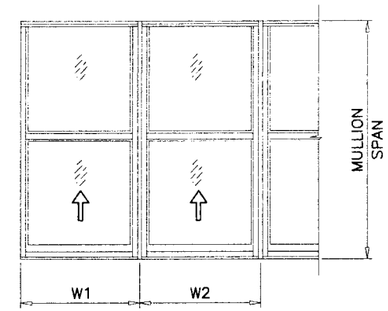

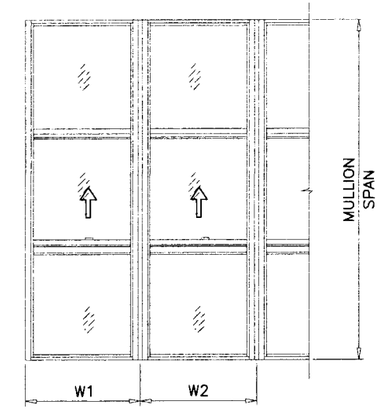

$$\text{WIDTH (W)} = \frac{W1 + W2}{2}$$

SEE CHARTS ON SHEET 2 FOR WINDOW CAPACITY.
SEE CHARTS ABOVE FOR WINDOW MULLION CAPACITY.
SEE CHARTS ON SHEET 4 FOR MULLION ANCHOR CAPACITY.
LOWER VALUES FROM THESE CHARTS WILL APPLY TO ENTIRE SYSTEM.

Engr: DR. HUMAYOUN FAROOQ
STRUCTURES
FLA. PE # 16557
C.A.N. 3538

OCT 08 2008

PRODUCT REVIEWED
as complying with the Florida Building Code
Acceptance No 08-1021.06
Expiration Date 01/29/2014
By
Miami Dade Product Control Division

AL-FAROOQ CORPORATION
ENGINEERS & PRODUCT DEVELOPMENT
1235 S.W. 87 AVE
MIAMI, FLORIDA 33174
TEL. (305) 264-8100 FAX. (305) 262-6978

COMP-ANL\W05-29GWL

SERIES-102L ALUM SINGLE HUNG WINDOW (L.M.I.)

GLASSWALL, LLC
3550 N.W. 49 STREET
MIAMI, FL. 33142
TEL. (305) 638-5151 FAX. (305) 638-5158

revisions:

no	date	by	description

date: 06-20-05
scale: 1/2" = 1"
dr. by: HAMID
chk. by:

drawing no.
W05-29

MULLION ANCHOR LOAD CAPACITY – PSF
SINGLE HUNG WINDOWS

WINDOW DIMS.		2" MIN. EDGE DIST.		3" MIN. EDGE DIST.	
		2 ANCHORS @ MULL END	4 ANCHORS @ MULL END	2 ANCHORS @ MULL END	4 ANCHORS @ MULL END
WIDTH (W)	MULL SPAN	EXT. (+) INT. (–)	EXT. (+) INT. (–)	EXT. (+) INT. (–)	EXT. (+) INT. (–)
19–1/8"	50–5/8"	110.0	110.0	110.0	110.0
26–1/2"		110.0	110.0	110.0	110.0
32"		110.0	110.0	110.0	110.0
37"		110.0	110.0	110.0	110.0
42"		110.0	110.0	110.0	110.0
46"		110.0	110.0	110.0	110.0
52–1/4"		102.2	110.0	110.0	110.0
19–1/8"	63"	110.0	110.0	110.0	110.0
26–1/2"		110.0	110.0	110.0	110.0
32"		110.0	110.0	110.0	110.0
37"		101.1	110.0	110.0	110.0
42"		92.3	110.0	110.0	110.0
46"		86.4	110.0	110.0	110.0
52–1/4"		78.4	110.0	110.0	110.0
19–1/8"	74–1/4"	110.0	110.0	110.0	110.0
26–1/2"		103.9	110.0	110.0	110.0
32"		90.1	110.0	110.0	110.0
37"		81.4	110.0	110.0	110.0
42"		74.7	110.0	110.0	110.0
46"		70.1	110.0	105.1	110.0
52–1/4"		63.9	110.0	95.9	110.0
19–1/8"	80"	110.0	110.0	110.0	110.0
26–1/2"		95.0	110.0	110.0	110.0
32"		82.0	110.0	110.0	110.0
37"		73.8	110.0	110.0	110.0
42"		67.7	110.0	101.6	110.0
46"		63.6	110.0	95.5	110.0
52–1/4"		58.1	110.0	87.2	110.0
19–1/8"	84–5/8"	110.0	110.0	110.0	110.0
26–1/2"		88.8	110.0	110.0	110.0
32"		76.5	110.0	110.0	110.0
37"		68.7	110.0	103.0	110.0
42"		62.9	110.0	94.3	110.0
46"		59.1	110.0	88.7	110.0
52–1/4"		54.1	110.0	81.1	110.0

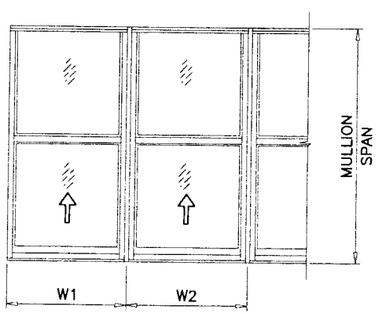

$$WIDTH\ (W) = \frac{W1 + W2}{2}$$

MULLION ANCHOR LOAD CAPACITY – PSF
SINGLE HUNG OVER FIXED WINDOW

WINDOW DIMS.		2" MIN. EDGE DIST.		3" MIN. EDGE DIST.	
		2 ANCHORS @ MULL END	4 ANCHORS @ MULL END	2 ANCHORS @ MULL END	4 ANCHORS @ MULL END
WIDTH (W)	MULL SPAN	EXT. (+) INT. (–)	EXT. (+) INT. (–)	EXT. (+) INT. (–)	EXT. (+) INT. (–)
19–1/8"	80"	110.0	110.0	110.0	110.0
26–1/2"		95.0	110.0	110.0	110.0
32"		81.4	110.0	110.0	110.0
37"		72.1	110.0	108.2	110.0
42"		64.7	110.0	97.1	110.0
46"		59.8	110.0	89.7	110.0
52–1/4"		53.5	110.0	80.2	110.0
19–1/8"	84–5/8"	110.0	110.0	110.0	110.0
26–1/2"		88.8	110.0	110.0	110.0
32"		76.2	110.0	110.0	110.0
37"		67.6	110.0	101.4	110.0
42"		60.7	110.0	91.1	110.0
46"		56.1	110.0	84.2	110.0
52–1/4"		50.2	110.0	75.3	110.0
19–1/8"	90"	109.2	110.0	110.0	110.0
26–1/2"		82.6	110.0	110.0	110.0
32"		70.9	110.0	106.3	110.0
37"		62.9	110.0	94.4	110.0
42"		56.6	110.0	84.8	110.0
46"		52.3	110.0	78.5	110.0
52–1/4"		46.9	110.0	70.3	110.0
19–1/8"	96"	101.6	110.0	110.0	110.0
26–1/2"		76.6	110.0	110.0	110.0
32"		65.6	110.0	98.4	110.0
37"		58.3	110.0	87.5	110.0
42"		52.5	110.0	78.8	110.0
46"		48.6	110.0	72.9	110.0
52–1/4"		43.6	110.0	65.4	110.0
19–1/8"	102"	95.0	110.0	110.0	110.0
26–1/2"		71.4	110.0	107.1	110.0
32"		61.0	110.0	91.6	110.0
37"		54.3	110.0	81.4	110.0
42"		48.9	110.0	73.4	110.0
46"		45.3	110.0	68.0	110.0
52–1/4"		40.7	110.0	61.0	110.0
19–1/8"	108"	89.2	110.0	110.0	110.0
26–1/2"		66.9	110.0	100.4	110.0
32"		57.1	110.0	85.6	110.0
37"		50.7	110.0	76.1	110.0
42"		45.7	110.0	68.6	110.0
46"		42.4	110.0	63.6	110.0
52–1/4"		38.1	110.0	57.1	110.0

MULLION ANCHOR LOAD CAPACITY – PSF
SINGLE HUNG OVER FIXED WINDOW

WINDOW DIMS.		2" MIN. EDGE DIST.		3" MIN. EDGE DIST.	
		2 ANCHORS @ MULL END	4 ANCHORS @ MULL END	2 ANCHORS @ MULL END	4 ANCHORS @ MULL END
WIDTH (W)	MULL SPAN	EXT. (+) INT. (–)	EXT. (+) INT. (–)	EXT. (+) INT. (–)	EXT. (+) INT. (–)
19–1/8"	114"	84.1	110.0	110.0	110.0
26–1/2"		62.9	110.0	94.4	110.0
32"		53.6	110.0	80.4	110.0
37"		47.5	110.0	71.3	110.0
42"		42.9	110.0	64.4	110.0
46"		39.8	110.0	59.7	110.0
19–1/8"	120"	79.5	110.0	110.0	110.0
26–1/2"		59.4	110.0	89.1	110.0
32"		50.5	110.0	75.7	110.0
37"		44.7	110.0	67.1	110.0
42"		40.4	110.0	60.6	110.0
46"		37.5	110.0	56.3	110.0

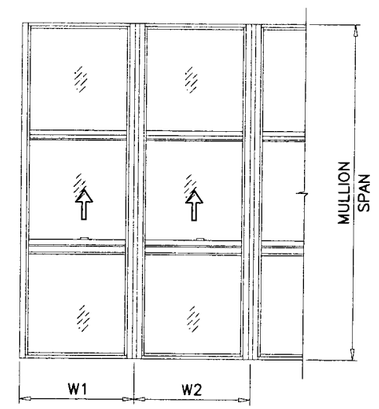

$$WIDTH\ (W) = \frac{W1 + W2}{2}$$

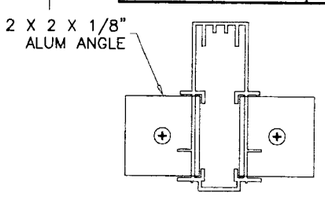

2 ANCHORS @ MULL ENDS

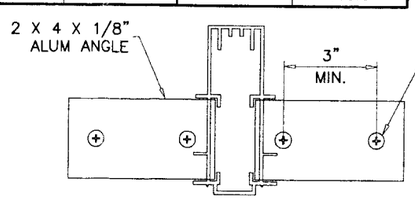

4 ANCHORS @ MULL ENDS

INSTALL CLIP ANGLES DIRECTLY TO CONC. WITHOUT SHIM SPACE
NOTCH WOOD BUCKS TO ACCOMMODATE CLIP ANGLES

Engr: DR. HUMAYOUN FAROOQ
STRUCTURES
FLA. PE # 16557
C.A.N. 3538

OCT 08 2008

PRODUCT REVISED
as complying with the Florida Building Code
Acceptance No 03-1021.06
Expiration Date 01/23/2014
By
Miami Dade Product Control Division

AL-FAROOQ CORPORATION
ENGINEERS & PRODUCT DEVELOPMENT
1235 S.W. 87 AVE
MIAMI, FLORIDA 33174
TEL. (305) 264-8100 FAX. (305) 262-6978
COMP-ANL\W05-29GWL

SERIES-102L ALUM SINGLE HUNG WINDOW (L.M.I.)

GLASSWALL, LLC
3550 N.W. 49 STREET
MIAMI, FL. 33142
TEL. (305) 638-5151 FAX. (305) 638-5158

revisions:

no	date	by	description

date: 06-20-05
scale: 1/2" = 1"
dr. by: HAMID
chk. by:

drawing no. W05-29

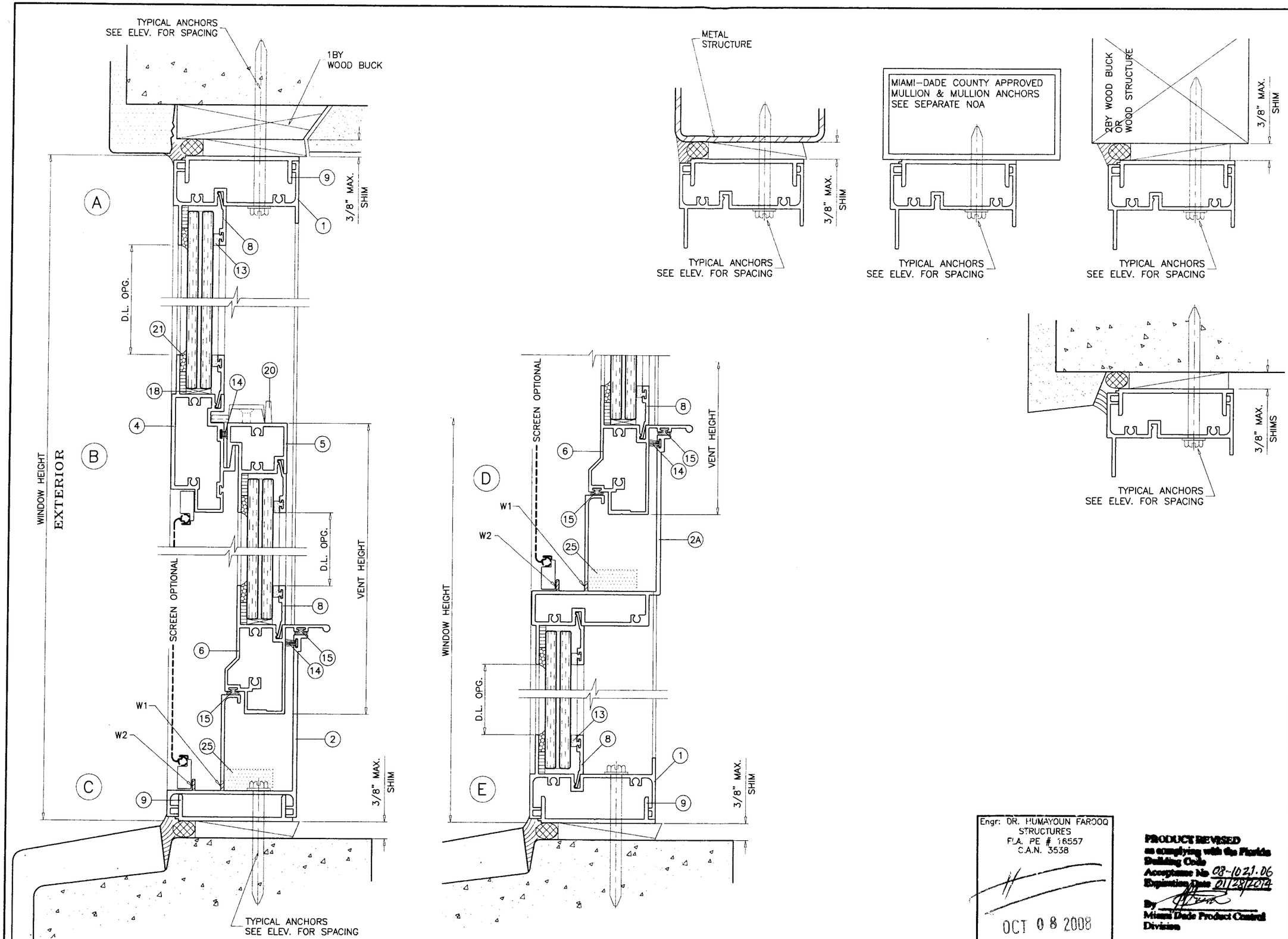

Engr: DR. HUMAYOUN FAROOQ
STRUCTURES
FLA. PE # 16557
C.A.N. 3538

OCT 08 2008

PRODUCT REVISED
as complying with the Florida Building Code
Acceptance No 08-1021.06
Expiration Date 01/28/2014
By
Miami Dade Product Control Division

AL-FAROOQ CORPORATION
ENGINEERS & PRODUCT DEVELOPMENT
1235 S.W. 87 AVE
MIAMI, FLORIDA 33174
TEL. (305) 264-8100 FAX. (305) 262-6978

COMP-ANL \W05-29GWL

SERIES-102L ALUM SINGLE HUNG WINDOW (L.M.I.)

GLASSWALL, LLC
3550 N.W. 49 STREET
MIAMI, FL. 33142
TEL. (305) 638-5151 FAX. (305) 638-5158

revisions:

no	date	by	description

date: 06-20-05
scale: 1/2" = 1"
dr. by: HAMID
chk. by:

drawing no.
W05-29

sheet 5 of 9

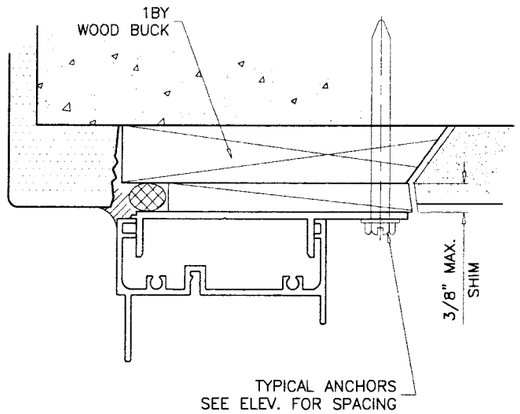

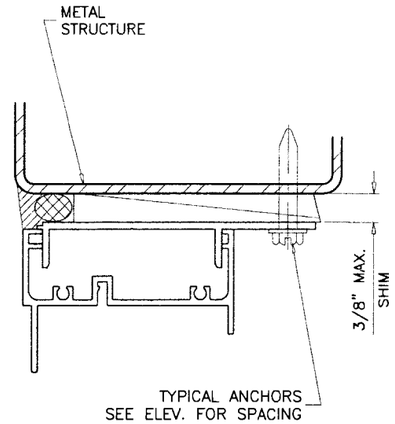

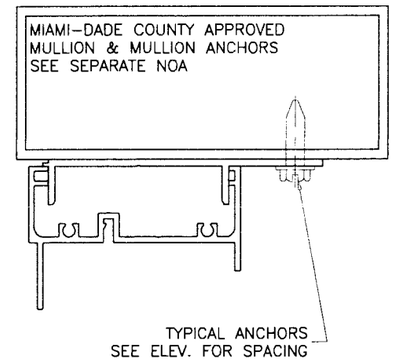

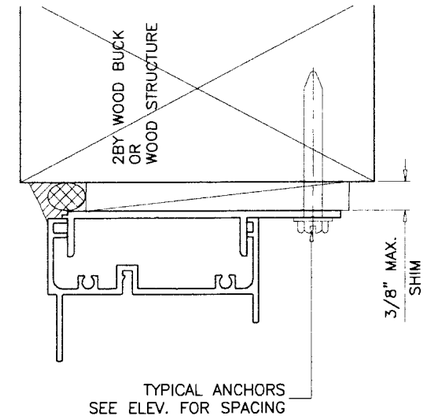

WOOD BUCKS AND METAL STRUCTURE NOT BY GLASSWALL MUST SUSTAIN LOADS IMPOSED BY GLAZING SYSTEM AND TRANSFER THEM TO THE BUILDING STRUCTURE.

TYPICAL ANCHORS: SEE ELEV. FOR SPACING

1/4" HILTI KWIK-CON II

INTO 2BY WOOD BUCKS OR WOOD STRUCTURES
1-1/2" MIN. PENETRATION INTO WOOD

THRU 1BY BUCKS INTO CONC. OR MASONRY
1-1/4" MIN. EMBED INTO CONC. OR MASONRY

DIRECTLY INTO CONC. OR MASONRY
1-1/4" MIN. EMBED INTO CONC. OR MASONRY

1/4-20 KWIK-FLEX SELF DRILLING SCREWS

INTO METAL STRUCTURES

STEEL : 12 GA. MIN. (Fy = 36 KSI MIN.)
ALUMINUM : 1/8" THK. MIN. (6063-T5 MIN.)
(STEEL IN CONTACT WITH ALUMINUM TO BE PLATED OR PAINTED)

#14 SMS OR SELF DRILLING SCREWS

INTO MIAMI-DADE COUNTY APPROVED MULLIONS (MIN. THK. = .090")
(NO SHIM SPACE)

TYPICAL EDGE DISTANCE

INTO CONCRETE AND MASONRY = 2" OR 3" MIN. SEE CHARTS
INTO WOOD STRUCTURE = 1" MIN.
INTO METAL STRUCTURE = 1/2" MIN.

SEALANTS:

ALL JOINTS AND FRAME CONNECTIONS SEALED WITH BLACK/ALUMINUM COLORED SILICONE.

WEEPHOLES:

W1 = 1" X 1/4" WEEP SLOT AT 3" FROM EACH END
W2 = 1" LONG NOTCH AT EACH END

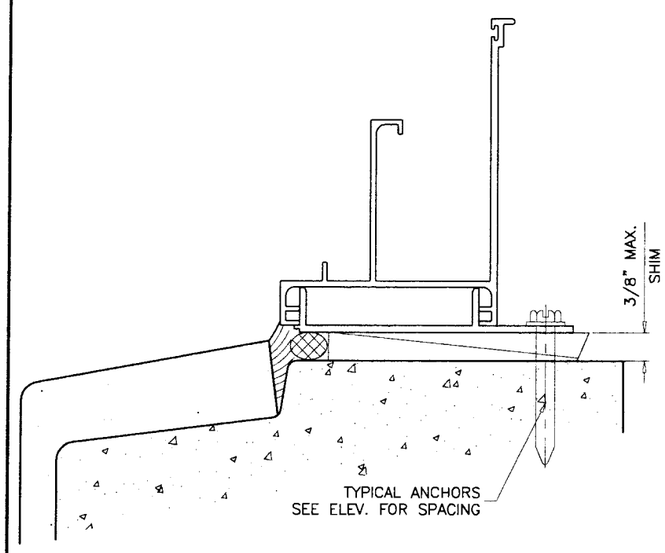

Engr: DR. HUMAYOUN FAROOQ
STRUCTURES
FLA. PE # 16557
C.A.N. 3538

OCT 08 2008

PRODUCT REVISED
as complying with the Florida Building Code
Acceptance No 08-1021.06
Expiration Date 01/28/2014
By
Miami Dade Product Control Division

AL-FAROOQ CORPORATION
ENGINEERS & PRODUCT DEVELOPMENT
1235 S.W. 87 AVE
MIAMI, FLORIDA 33174
TEL. (305) 264-8100 FAX. (305) 262-6978
COMP-ANL\W05-29GWL

SERIES-102L ALUM SINGLE HUNG WINDOW (L.M.I.)

GLASSWALL, LLC
3550 N.W. 49 STREET
MIAMI, FL. 33142
TEL. (305) 638-5151 FAX. (305) 638-5158

revisions:

no	date	by	description

date: 06-20-05
scale: 1/2" = 1"
dr. by: HAMID
chk. by:

drawing no.
W05-29

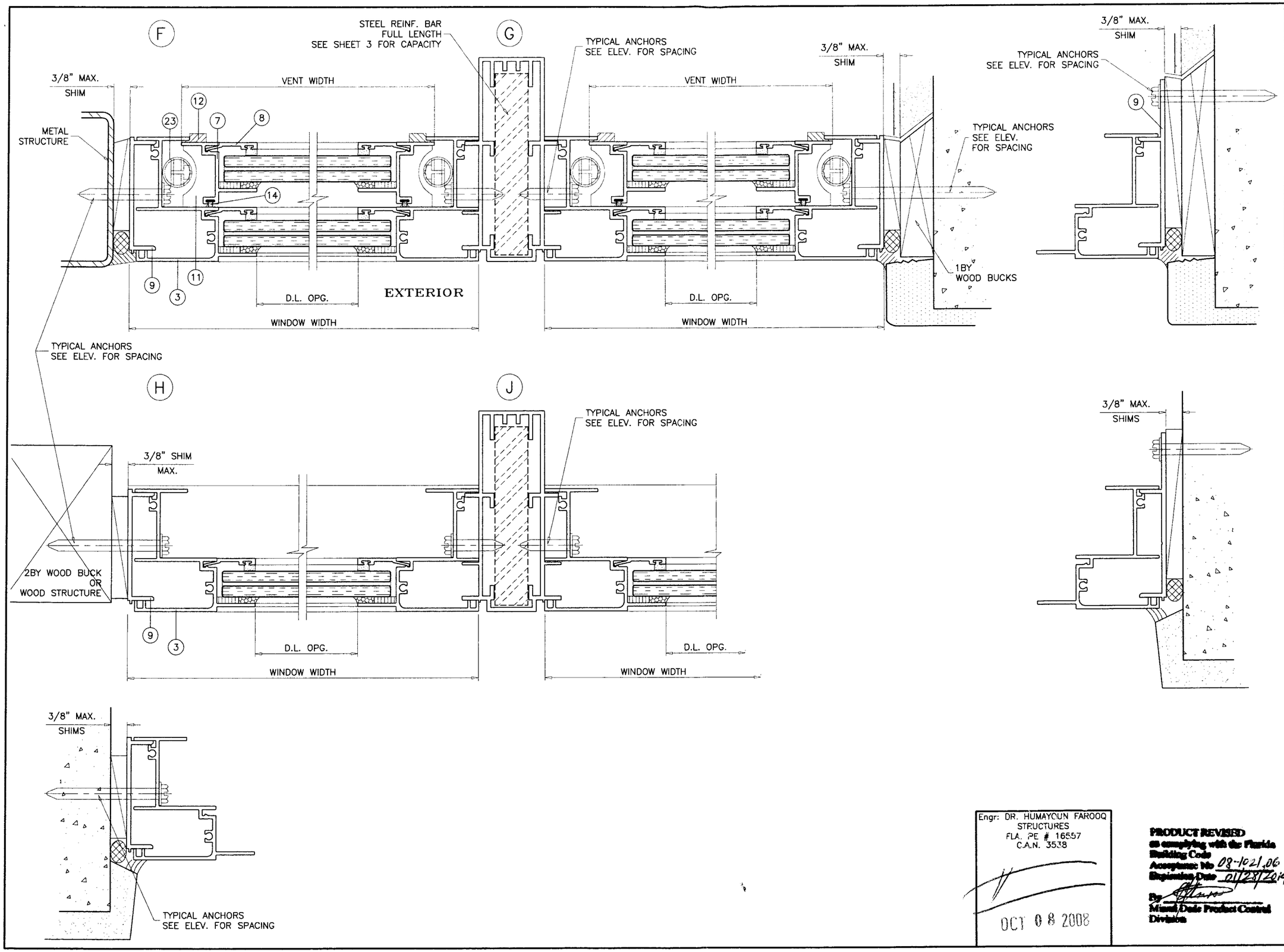

Engr: DR. HUMAYOUN FAROOQ
STRUCTURES
FLA. PE # 16557
C.A.N. 3538

OCT 0 8 2008

PRODUCT REVISED
as complying with the Florida Building Code
Acceptance No 08-1021.06
Expiration Date 01/28/2014
By _____
Miami-Dade Product Control Division

AL-FAROOQ CORPORATION
ENGINEERS & PRODUCT DEVELOPMENT
1235 S.W. 87 AVE
MIAMI, FLORIDA 33174
TEL. (305) 264-8100 FAX. (305) 262-6978
COMP-ANL\W05-29GWL

SERIES-102L ALUM SINGLE HUNG WINDOW (L.M.I.)

GLASSWALL, LLC
3550 N.W. 49 STREET
MIAMI, FL. 33142
TEL. (305) 638-5151 FAX. (305) 638-5158

revisions:

no	date	by	description

date: 06-20-05
scale: 1/2" = 1"
dr. by: HAMID
chk. by:

drawing no.
W05-29

sheet 7 of 9

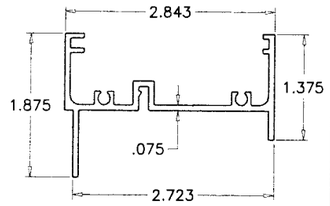

1 FRAME HEAD

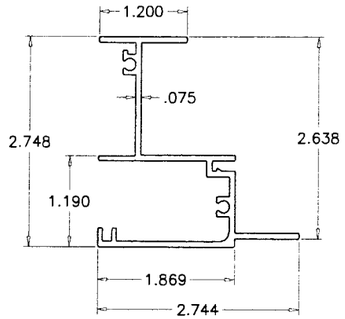

3 FRAME JAMB

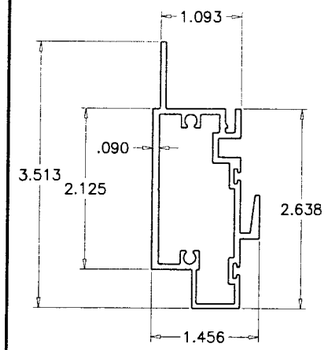

4 MEETING RAIL

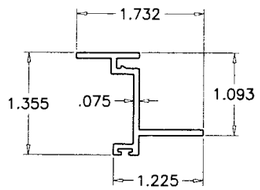

7 VENT SIDE RAIL

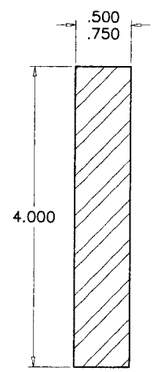

17 REINF. BAR

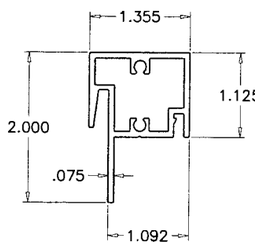

5 VENT TOP RAIL

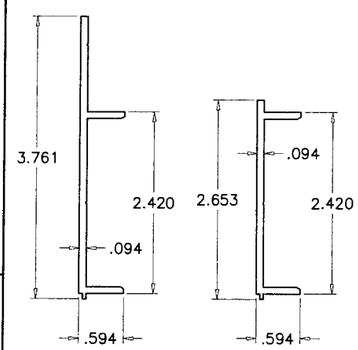

9 ANCHOR CLIP

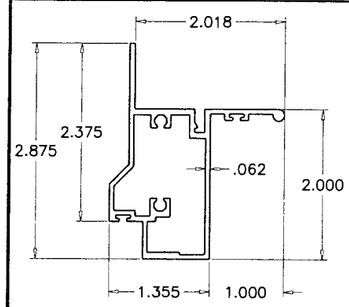

6 VENT BOTTOM RAIL

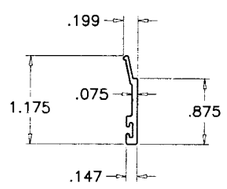

8 GLAZING BEAD

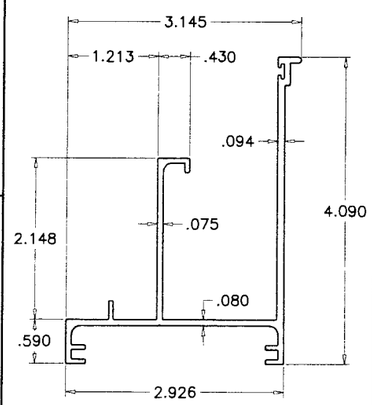

2 FRAME SILL

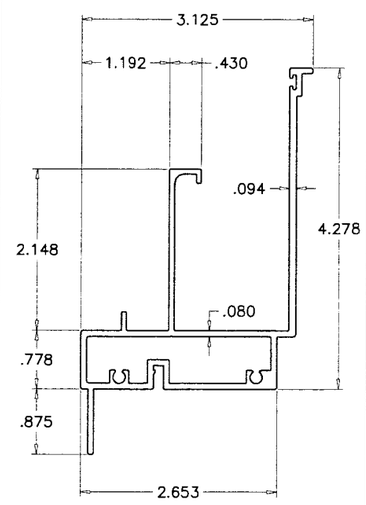

2A FRAME SILL (INTERMEDIATE)

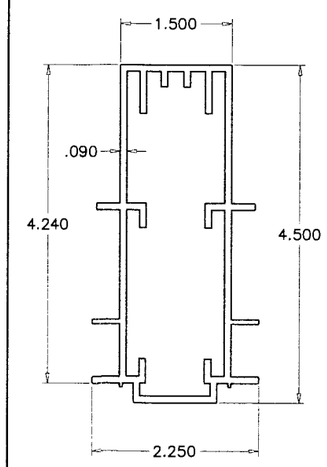

10 MULLION

ITEM #	PART #	REQD.	DESCRIPTION	MATERIAL	MANF./SUPPLIER/REMARKS
1	102-001	1	FRAME HEAD	6005-T5	–
2	102-002	1	FRAME SILL	6005-T5	–
2A	102-012	1	FRAME SILL (INTERMEDIATE)	6005-T5	–
3	102-003	2	FRAME JAMB	6005-T5	–
4	102-004	1	FIXED MTG. RAIL	6063-T6	–
5	102-005	1	VENT TOP RAIL	6005-T5	–
6	102-006	1	VENT BOTTOM RAIL	6005-T5	–
7	102-007	2	VENT SIDE RAIL	6005-T5	–
8	102-008	AS REQD.	GLAZING BEAD	6005-T5	–
9	102-009	AS REQD.	ANCHOR CLIP	6005-T5	–
10	102-010	AS REQD.	MULLION	6005-T5	–
11	102-00A/B	2	TOP GUIDE	NYLON	M & M PLASTICS
12	102-000	4	PLASTIC GUIDE	NYLON	M & M PLASTICS
13	GW-100	AS REQD.	GLASS SPACER	VINYL	PROTOTYPE PLASTICS
14	568-61279	AS REQD.	FIN SEAL W'STRIPPING	–	PROTOTYPE PLASTICS
15	692-FP-448V-B	AS REQD.	BULB W'STRIPPING	VINYL	PROTOTYPE PLASTICS
16	–	–	–	–	–
17	–	AS REQD.	REINFORCING BAR	STEEL	–
18	–	2/ LITE	SETTING BLOCK (3/16 X 1/2 X 4" LONG)	EPDM	–
19	#10 X 1"	AS REQD.	FRAME & VENT ASSEMBLY FASTENERS	ST/ST	PH PH SMS
20	SL-106R-60	2	SURFACE MOUNT CAM LOCK @ 10" FROM ENDS	STEEL	DOOR & WINDOW HARDWARE
21	GE4000/DC795	AS REQD.	GLAZING COMPOUND	SILICONE	–
22	–	–	SPACER TAPE (3/16" X 1/2")	FOAM	CAPITAL TAPE CO.
23	–	2	ULTRA-LIFT BALANCE	–	CALDWELL
24	–	–	–	–	–
25	–	2	OPEN CELL FOAM PAD (1 X 1 X 2" LONG)	–	MERRY WEATHER

Engr: DR. HUMAYOUN FAROOQ
STRUCTURES
FLA. PE # 16537
C.A.N. 3538

OCT 08 2008

PRODUCT REVISED
in complying with the Florida Building Code
Acceptance No 08-1021.06
Expiration Date 01/28/2014
By
Miami/Dade Product Control Division

AL-FAROOQ CORPORATION
ENGINEERS & PRODUCT DEVELOPMENT
1235 S.W. 87 AVE
MIAMI, FLORIDA 33174
TEL. (305) 264-8100 FAX. (305) 262-6978

COMP-ANL\W05-29GWL

SERIES-102L ALUM SINGLE HUNG WINDOW (L.M.I.)

GLASSWALL, LLC
3550 N.W. 49 STREET
MIAMI, FL. 33142
TEL. (305) 638-5151 FAX. (305) 638-5158

revisions:

no	date	by	description

date: 06-20-05
scale: 1/2" = 1"
dr. by: HAMID
chk. by:

drawing no.
W05-29

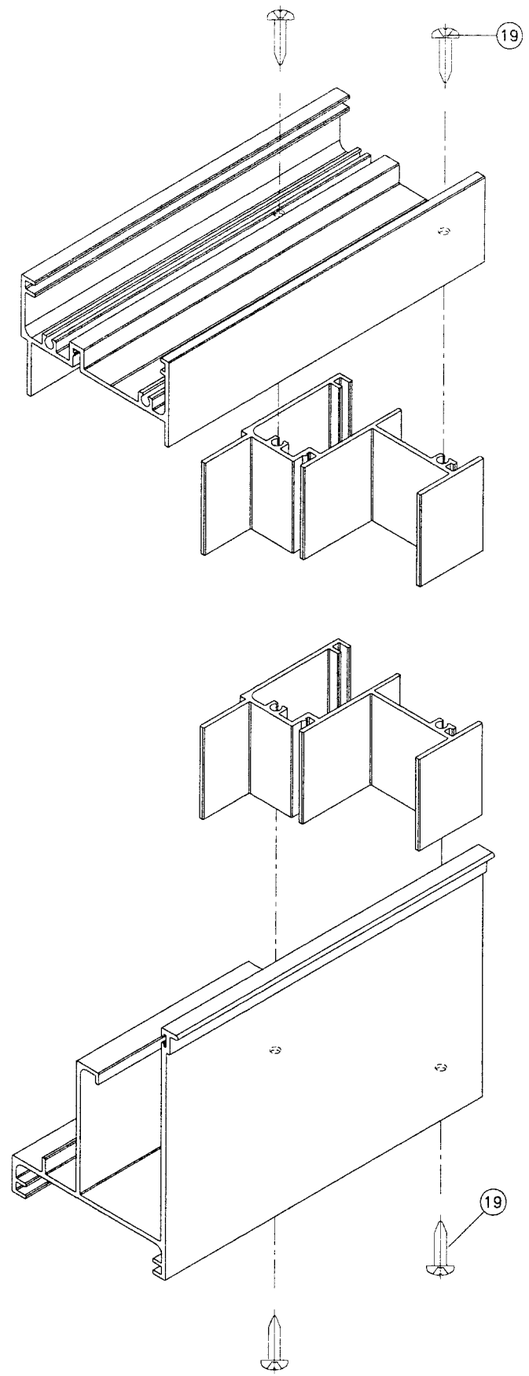

FRAME CORNERS DETAIL

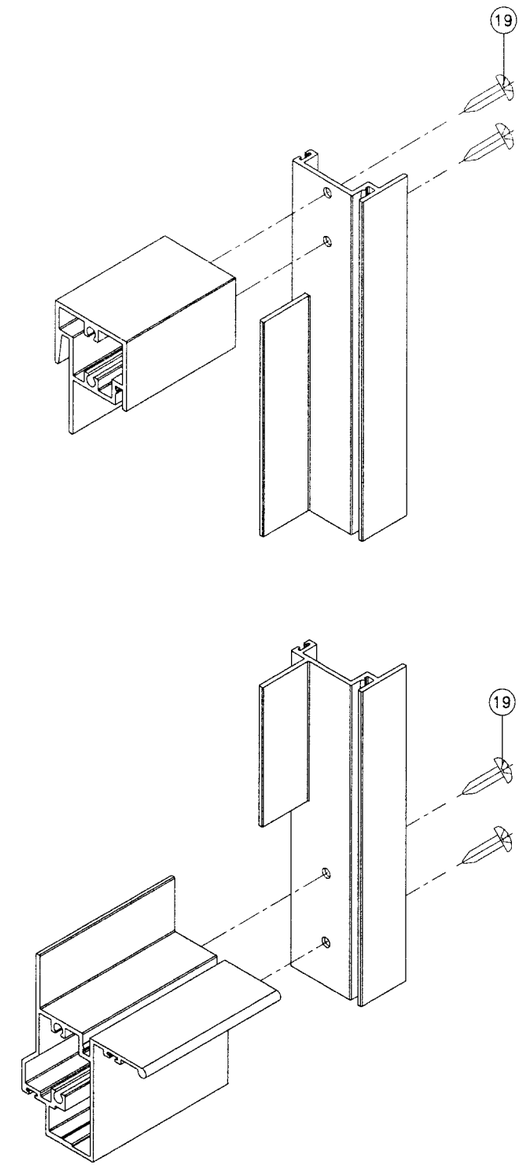

VENT CORNER DETAIL

Engr: DR. HUMAYOUN FAROOQ
STRUCTURES
FLA. PE # 16557
C.A.N. 3538

OCT 0 8 2008

PRODUCT REVISED
as complying with the Florida Building Code
Acceptance No 08-1021.06
Expiration Date 01/28/2014
By
Miami Dade Product Control Division

AL-FAROOQ CORPORATION
ENGINEERS & PRODUCT DEVELOPMENT
1235 S.W. 87 AVE
MIAMI, FLORIDA 33174
TEL. (305) 264-8100 FAX. (305) 262-6978
COMP-ANL\W05-29GWL

SERIES-102L ALUM SINGLE HUNG WINDOW (L.M.I.)

GLASSWALL, LLC
3550 N.W. 49 STREET
MIAMI, FL. 33142
TEL. (305) 638-5151 FAX. (305) 638-5158

revisions:

no	date	by	description

date: 06-20-05
scale: 1/2" = 1"
dr. by: HAMID
chk. by:

drawing no.
W05-29

sheet 9 of 9