MIAMI-DADE

BUILDING CODE COMPLIANCE OFFICE (BCCO)
PRODUCT CONTROL DIVISION

MIAMI-DADE COUNTY, FLORIDA
METRO-DADE FLAGLER BUILDING
140 WEST FLAGLER STREET, SUITE 1603
MIAMI, FLORIDA 33130-1563
(305) 375-2901 FAX (305) 375-2908

NOTICE OF ACCEPTANCE (NOA)

GAF Materials Corp.
1361 Alps Rd.
Wayne, NJ 07470

SCOPE:
This NOA is being issued under the applicable rules and regulations governing the use of construction materials. The documentation submitted has been reviewed by the BCCO and accepted by the Building Code and Product Review Committee to be used in Miami Dade County and other areas where allowed by the Authority Having Jurisdiction (AHJ).

This NOA shall not be valid after the expiration date stated below. The BCCO (In Miami Dade County) and/or the AHJ (in areas other than Miami Dade County) reserve the right to have this product or material tested for quality assurance purposes. If this product or material fails to perform in the accepted manner, the manufacturer will incur the expense of such testing and the AHJ may immediately revoke, modify, or suspend the use of such product or material within their jurisdiction. BCCO reserves the right to revoke this acceptance, if it is determined by BCCO that this product or material fails to meet the requirements of the applicable building code.

This product is approved as described herein, and has been designed to comply with the Florida Building Code, including the High Velocity Hurricane Zone of the Florida Building Code.

DESCRIPTION: GAF-Elk Timberline Prestique 30 Shingle

RENEWAL of this NOA shall be considered after a renewal application has been filed and there has been no change in the applicable building code negatively affecting the performance of this product.

TERMINATION of this NOA will occur after the expiration date or if there has been a revision or change in the materials, use, and/or manufacture of the product or process. Misuse of this NOA as an endorsement of any product, for sales, advertising or any other purposes shall automatically terminate this NOA. Failure to comply with any section of this NOA shall be cause for termination and removal of NOA.

ADVERTISEMENT: The NOA number preceded by the words Miami-Dade County, Florida, and followed by the expiration date may be displayed in advertising literature. If any portion of the NOA is displayed, then it shall be done in its entirety.

INSPECTION: A copy of this entire NOA shall be provided to the user by the manufacturer or its distributors and shall be available for inspection at the job site at the request of the Building Official.

This revises NOA #07-0507.12 and consists of pages 1 through 5.
The submitted documentation was reviewed by Alex Tigera.

MIAMI-DADE COUNTY APPROVED

ROOFING SYSTEM APPROVAL

Category:	Roofing
Sub-Category:	07310 Asphalt Shingles
Materials	Dimensional
Deck Type:	Wood

1. SCOPE

This revises GAF-Elk Timberline Prestique 30 as manufactured by GAF Materials Corp described in Section 2 of this Notice of Acceptance.

2. PRODUCT DESCRIPTION

Product	Dimensions	Test Specifications	Product Description
GAF-Elk Timberline Prestique 30	$13^1/_4$" x $39^3/_8$"	TAS 110	Fiberglass reinforced heavy weight asphalt roof shingle, with a laminate profile

3. EVIDENCE SUBMITTED:

Test Agency	Test Identifier	Test Name/Report	Date
Underwriters Laboratories, Inc.	ASTM D3462	05CA47541	11/10/06
Underwriters Laboratories, Inc.	ASTM D3462	06CA31580	11/30/06
PRI Asphalt Technologies, Inc.	ASTM D3462	GAF-101-02-02	11/02/05
Underwriters Laboratories, Inc.	ASTM D3462	06NK05159	08/09/06
PRI Asphalt Technologies, Inc.	ASTM D3462	GAF-098-02-02	11/08/05
Underwriters Laboratories, Inc.	ASTM D3462	02NK41809	08/11/02
Underwriters Laboratories, Inc.	ASTM D3462	03NK26444	10/17/03
Center for Applied Engineering	ASTM D3462	257989	05/13/97
Underwriters Laboratories, Inc.	TAS 107	01NK45803	04/13/94
Underwriters Laboratories, Inc.	TAS 107	06NK05159	08/09/06
Underwriters Laboratories, Inc.	TAS 107	04NK04273	02/20/04
Underwriters Laboratories, Inc.	TAS 107	05CA42840	11/11/05
Underwriters Laboratories, Inc.	TAS 107	02NK41811	11/11/02
Underwriters Laboratories, Inc.	TAS 107	03CA35209	10/17/03
Underwriters Laboratories, Inc.	TAS 107	04CA13850	08/30/04
Center for Applied Engineering	TAS 100	257989	04/01/97
PRI Asphalt Technologies, Inc.	TAS 100	GAF-044-02-01	01/13/04
PRI Asphalt Technologies, Inc.	TAS 100	GAF-101-02-01	11/09/05
PRI Asphalt Technologies, Inc.	TAS 100	GAF-116-02-02	03/23/06
PRI Asphalt Technologies, Inc.	TAS-100	ELK-083-02-01	10/16/02
		ELK-084-02-01	10/15/02
		ELK-085-02-01	10/14/02
		ELK-086-02-01	10/24/02
		ELK-087-02-01	10/21/02
		ELK-088-02-01	10/16/02
		ELK-107-02-01	10/09/03
		ELK-108-02-01	10/09/03
		ELK-109-02-01	10/09/03

4. LIMITATIONS

4.1 Fire classification is not part of this acceptance; refer to a current Approved Roofing Materials Directory for fire ratings of this product.

4.2 Shall not be installed on roof mean heights in excess of 33 ft.

4.3 All products listed herein shall have a quality assurance audit in accordance with the Florida Building Code and Rule 9B-72 of the Florida Administrative Code.

5. INSTALLATION

5.1 Shingles shall be installed in compliance with Roofing Application Standard RAS 115.

5.2 Flashing shall be in accordance with Roofing Application Standard RAS 115

5.3 The manufacturer shall provide clearly written application instructions.

5.4 Exposure and course layout shall be in compliance with Detail 'A', attached.

5.5 Nailing shall be in compliance with Detail 'B', attached.

6. LABELING

6.1 Shingles shall be labeled with the Miami-Dade Seal or the wording "Miami-Dade County Product Control Approved".

7. BUILDING PERMIT REQUIREMENTS

7.1 Application for building permit shall be accompanied by copies of the following:

7.1.1 This Notice of Acceptance.

7.1.2 Any other documents required by the Building Official or the applicable code in order to properly evaluate the installation of this system.

8. MANUFACTURING PLANTS

8.1 Tampa, FL

8.2 Michigan City, IN

8.3 Mobile, AL

8.4 Baltimore, MD

8.5 Myerstown, PA

8.6 Ennis, TX

8.7 Tuscaloosa, AL

8.8 Dallas, TX

DETAIL A

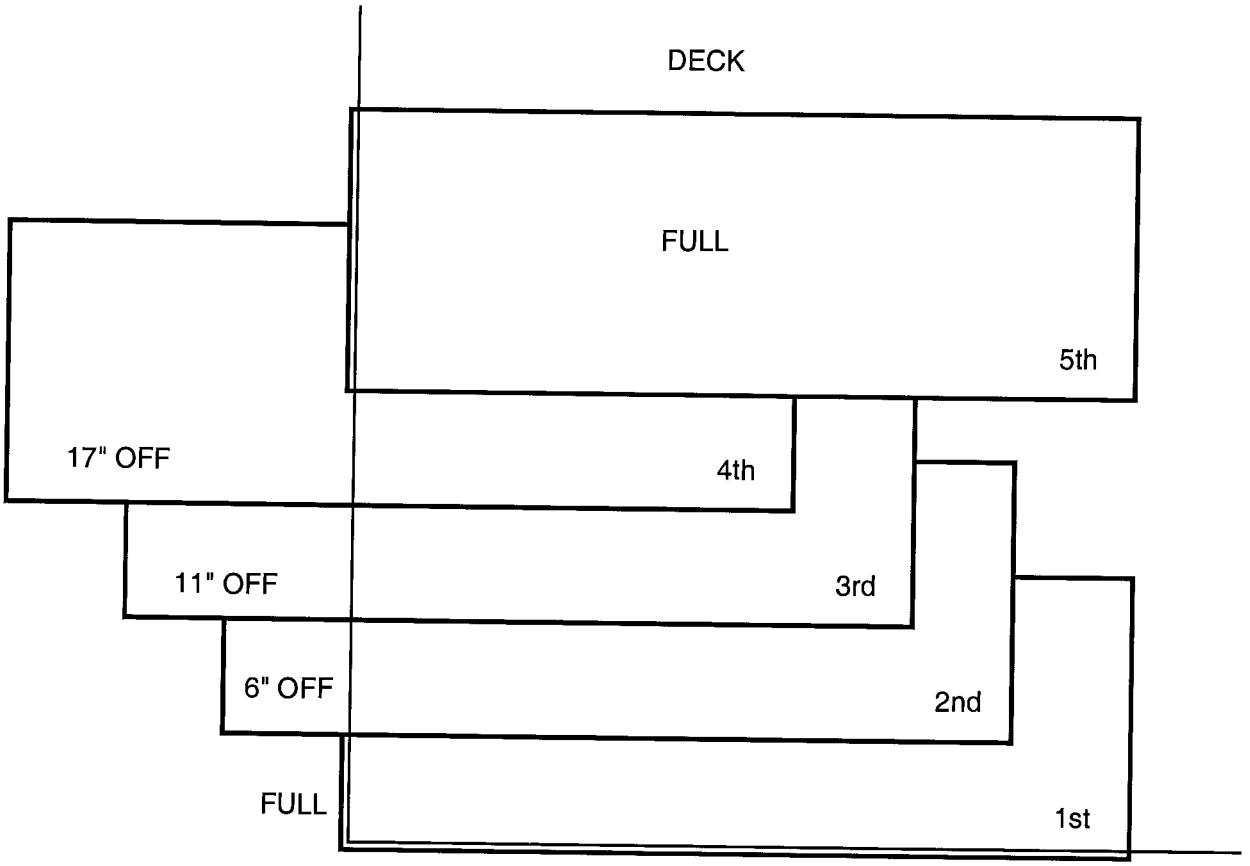

DETAIL B

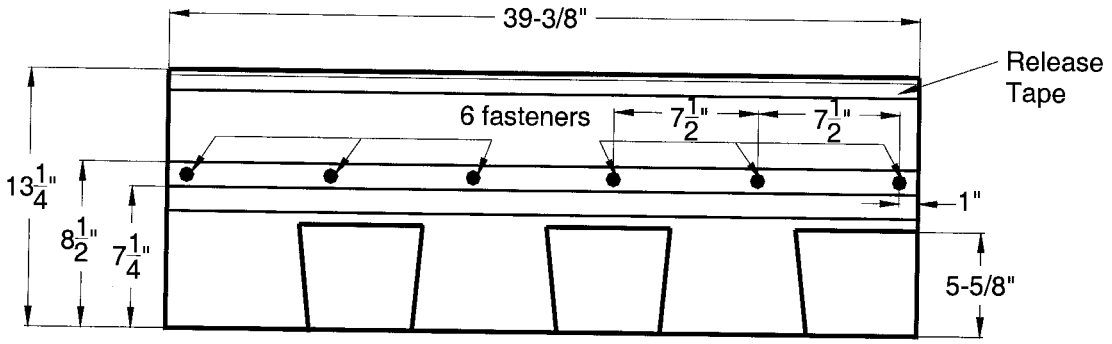

Front Side (Maximum Slope 12:12)

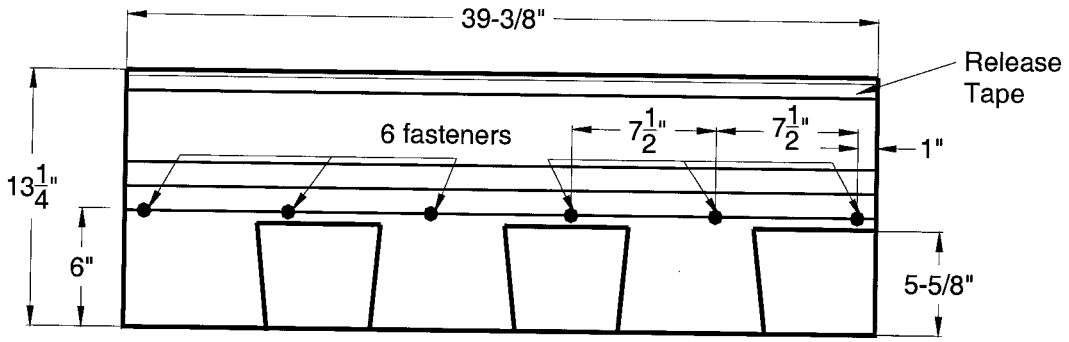

Front Side (Maximum Slope 21:12)

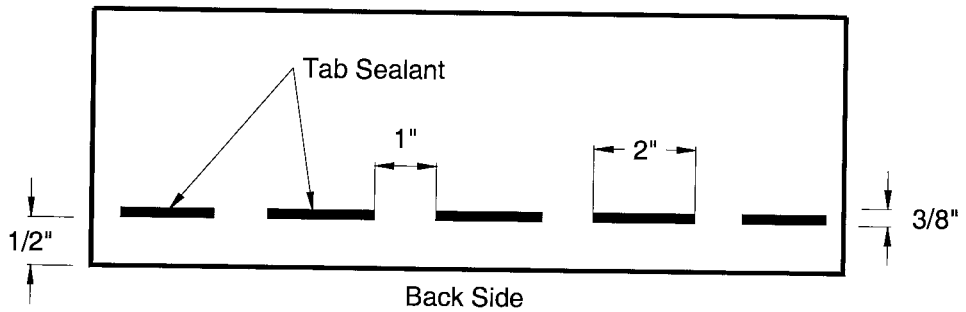

Back Side

END OF THIS ACCEPTANCE