MIAMI-DADE COUNTY
BUILDING CODE COMPLIANCE OFFICE (BCCO)
PRODUCT CONTROL DIVISION

MIAMI-DADE COUNTY, FLORIDA
METRO-DADE FLAGLER BUILDING
140 WEST FLAGLER STREET, SUITE 1603
MIAMI, FLORIDA 33130-1563
(305) 375-2901 FAX (305) 372-6339
www.miamidade.gov/buildingcode

NOTICE OF ACCEPTANCE (NOA)

Reliable Products
1300 Enterprise Drive
Geneva, AL 36340

SCOPE:

This NOA is being issued under the applicable rules and regulations governing the use of construction materials. The documentation submitted has been reviewed by Miami-Dade County Product Control Division and accepted by the Board of Rules and Appeals (BORA) to be used in Miami Dade County and other areas where allowed by the Authority Having Jurisdiction (AHJ).

This NOA shall not be valid after the expiration date stated below. The Miami-Dade County Product Control Division (In Miami Dade County) and/or the AHJ (in areas other than Miami Dade County) reserve the right to have this product or material tested for quality assurance purposes. If this product or material fails to perform in the accepted manner, the manufacturer will incur the expense of such testing and the AHJ may immediately revoke, modify, or suspend the use of such product or material within their jurisdiction. BORA reserves the right to revoke this acceptance, if it is determined by Miami-Dade County Product Control Division that this product or material fails to meet the requirements of the applicable building code.

This product is approved as described herein, and has been designed to comply with the Florida Building Code, including the High Velocity Hurricane Zone.

DESCRIPTION: Model 6375DC Aluminum Louver with Optional CD102 Damper

APPROVAL DOCUMENT: Drawing No. **60-022117-01D** through **09D**, titled "6375DC Louver and CD-102 Damper Assembly," dated 03/06/98, prepared by Reliable Products, signed and sealed by Daniel J. Rau, P.E., bearing the Miami-Dade County Product Control approval stamp with the Notice of Acceptance number and approval date by the Miami-Dade County Product Control Division.

MISSILE IMPACT RATING: Large and Small Missile Impact Resistant

LABELING: Each unit shall bear a permanent label with the manufacturer's name or logo, city, state and following statement: "Miami-Dade County Product Control Approved", unless otherwise noted herein.

RENEWAL of this NOA shall be considered after a renewal application has been filed and there has been no change in the applicable building code negatively affecting the performance of this product.

TERMINATION of this NOA will occur after the expiration date or if there has been a revision or change in the materials, use, and/or manufacture of the product or process. Misuse of this NOA as an endorsement of any product, for sales, advertising or any other purposes shall automatically terminate this NOA. Failure to comply with any section of this NOA shall be cause for termination and removal of NOA.

ADVERTISEMENT: The NOA number preceded by the words Miami-Dade County, Florida, and followed by the expiration date may be displayed in advertising literature. If any portion of the NOA is displayed, then it shall be done in its entirety.

INSPECTION: A copy of this entire NOA shall be provided to the user by the manufacturer or its distributors and shall be available for inspection at the job site at the request of the Building Official.

This NOA consists of this page 1 and evidence pages E-1 and E-2, as well as approval document mentioned above.

The submitted documentation was reviewed by **Carlos M. Utrera, P.E.**

MIAMI-DADE COUNTY APPROVED

1/7/09

NOTICE OF ACCEPTANCE: EVIDENCE SUBMITTED

A. DRAWINGS

1. Manufacturer's die drawings and sections.
2. Drawing No. **60-022117-01D** through **09D**, titled "6375DC Louver and CD-102 Damper Assembly," dated 03/06/98, prepared by Reliable Products, signed and sealed by Daniel J. Rau, P.E.

B. TESTS

1. Test report on Large Missile Impact Test per PA 201, Cyclic wind Pressure Test per PA 203 and Uniform Static Air Pressure Test per PA 202 of "Open, Extruded Aluminum Louver Assembly," prepared by Construction Research Laboratory Inc., Report No.**97-1124.22**, dated 08/04/00 and revised on 12/18/00 , signed and sealed by N. S. Balsara, P.E.
   "Submitted under NOA # 01-0328.04"

C. CALCULATIONS

1. Louver Blade, Mullion & Support Calculations of Dade County Louver per DWG. No. 60021680-21D, dated 07/18/00, pages 1 to 21 of 21, prepared by R. H. Wagner, signed and sealed by E. P. Hutson, P.E.
   "Submitted under NOA # 01-0328.04"

D. QUALITY ASSURANCE

1. Miami Dade Building Code Compliance Office (BCCO).

E. MATERIAL CERTIFICATIONS

1. Extrusion drawings No. 70-020689-00B, 70-020690-00B, 70-020691-00B & 70-020560-00B, prepared by Ruskin Manufacturing, on 05/17/96, 04/05/96, 05/20/96 & 10/25/94 approved by G.L. and R.V.B.
   "Submitted under NOA # 06-0602.04"

1/7/09

Carlos M. Utrera, P.E.
Product Control Examiner
NOA No. 08-1110.12
Expiration Date: July 9, 2011
Approval Date: January 28, 2009

NOTICE OF ACCEPTANCE: EVIDENCE SUBMITTED

F. STATEMENTS

1. Letter of Code Compliance issued by Ruskin Manufacturing, on 07/29/97, signed by M. Astourian, P.E.
2. Test Compliance letter issued by Construction Research Laboratory, Inc., on 08/04/00, signed by R. Sembello.
3. No Financial Interest letter issued by Ruskin Manufacturing, signed by V. M. Astourian and notarized by T. S. Turner on 06/23/99.
   "Submitted under NOA # 01-0328.04"

4. No change letter issued by Ruskin Manufacturing on 05/05/06 and 05/19/06, signed by R. Van Becelaere.
   "Submitted under NOA # 06-0602.04"

5. Revision request letter and new sill die drawings, prepared by Ruskin Company, dated 04/21/08, signed and sealed by Daniel J. Rau, P.E.
   "Submitted under NOA # 08-0506.09"

6. Private Labeling Agreement document in conformance to BCCO guidelines, signed by John E. Knapp and Daniel J. Rau.

1/7/09

Carlos M. Utrera, P.E.
Product Control Examiner
NOA No. 08-1110.12
Expiration Date: July 9, 2011
Approval Date: January 28, 2009

LOUVER SCHEDULE

MODEL	DAMPER REQUIRED BEHIND LOUVER	LOUVER SIZE "A"	LOUVER SIZE "B"	O.D. OF SLEEVE SIZE WIDTH ("A")	O.D. OF SLEEVE SIZE HEIGHT ("B")	O.D. OF SLEEVE SIZE DEPTH	ROUGH OPENING DIM. "C"	ROUGH OPENING DIM. "D"	SHIP SECTIONS	ASSY	DETAILS HEAD	DETAILS JAMB	DETAILS SILL	H.V.B.S. TYPE	H.V.B.S. C-C	H.V.B.S. QTY	H.V.B.S. DEPTH	COLOR	LEGEND
6375DC	NO DAMPER	47 1/4"	71 1/4"	–	–	–	48 1/4"	72 1/4"	1	A	11/03D	13 SIM	13/03D	059	23 5/8"	1	8"	MILL	
6375DC	DAMPER REQUIRED	95 1/4"	117 3/4"	96 1/2"	118"	32 1/2"	97 1/4"	118 3/4"	2	E	12/03D	12 SIM	14/03D	C4 X 5.4#	24 1/16"	3	4"	MILL	③
6375DC	DAMPER REQUIRED	156"	96"	158 1/4"	96 1/4"	34 1/2"	157"	97"	2	C	7/02D	8/02D	9/02D	(2)059	28"	4	8"	MILL	③⑥
6375DC	NO DAMPER	95 1/2"	119"	–	–	–	96 1/2"	120"	2	B	11/03D	13 SIM	13/03D	C5 X 6.7#	23 7/8"	3	5"	MILL	
6375DC	NO DAMPER	32 5/8"	61 7/8"	–	–	–	33 5/8"	62 7/8"	1	D	17/04D	15/04D	16/04D	087	16 5/16"	1	4"	MILL	⑤
6375DC Ⓐ	NO DAMPER	251 3/4"	119 3/4"	252"	120"		252 1/4"	120 1/4"	3	F				C5 X 6.7#	20 15/16"	9	5"	MILL	

FRAME
6063-T5 extruded aluminum with .080" nominal wall thickness.
Flange frame is same material and thickness as above.
BLADES
6063-T5 extruded aluminum with .080" nominal wall thickness. Blades are positioned at 37.5° angle.
SCREEN
3/4" x .051" expanded flattened aluminum bird screen.
1/2" mesh x .063" aluminum bird screen.
18-16 mesh alum insect screen
No screen.
FINISH
Mill.
Kynar (opt).
Baked enamel (modified fluoropolymer, 50% Kynar, opt).
Color Anodize (opt).
Clear Anodize (opt).
Color:
ACCESSORIES
Extended sill.
Clip angles.
Blankoff panel.REF SCHED

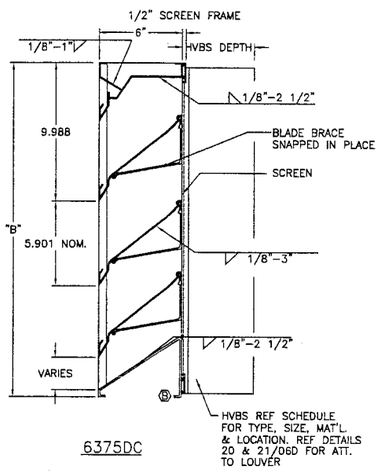

6375DC

FRAME
6063-T5 extruded aluminum with .125" nominal wall thickness. W/4" x 1" angle rear @ perimiter only.
Flange frame is same material and thickness as above.
BLADES
6063-T5 extruded aluminum with .080" nominal wall thickness. Blades are positioned at 37.5° angle.
SCREEN
3/4" x .051" expanded flattened aluminum bird screen.
1/2" mesh x .063" aluminum bird screen. Note 1.
18-16 mesh alum insect screen
No screen.
FINISH
Mill.
Kynar (opt).
Baked enamel (modified fluoropolymer, 50% Kynar, opt).
Color Anodize (opt).
Clear Anodize (opt).
Color: SEE NOTE #15
ACCESSORIES
Extended sill. REF DETAIL'S
Clip angles.
Blankoff panel.
1 1/2" x 1 1/2" x 1/8" Continuous angles at perimeter

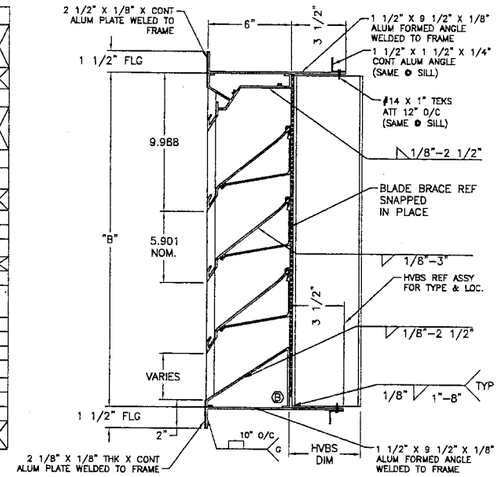

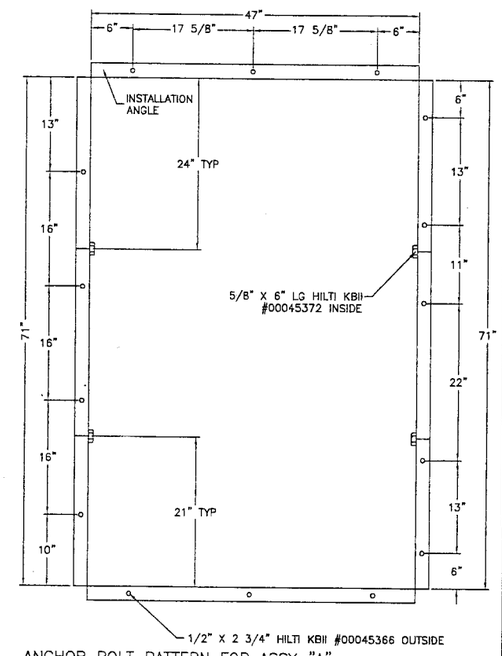

ANCHOR BOLT PATTERN FOR ASSY "A"
N.T.S. REAR VIEW

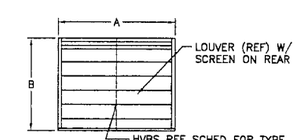

ASSEMBLY "A"
NTS FRONT VIEW

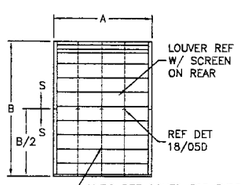

ASSEMBLY "E"
NTS FRONT VIEW

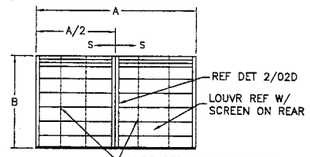

ASSEMBLY "C"
NTS FRONT VIEW

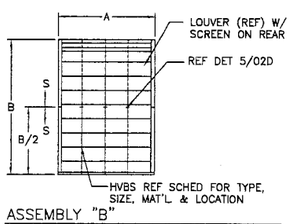

ASSEMBLY "B"
NTS FRONT VIEW

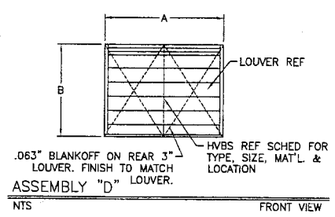

ASSEMBLY "D" LOUVER.
NTS FRONT VIEW

Ⓐ 6375DC

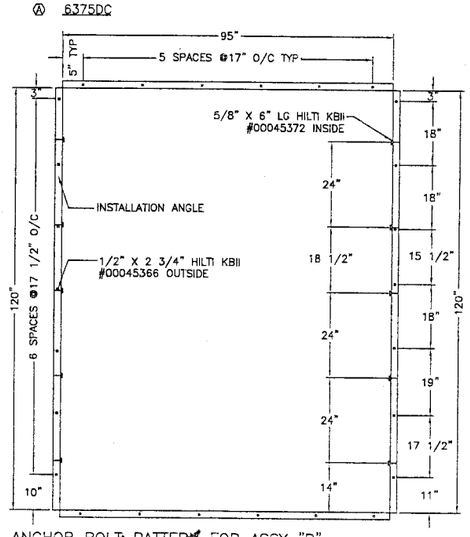

ANCHOR BOLT PATTERN FOR ASSY "B"
N.T.S. REAR VIEW

Ⓑ DESIGN PRESSURE RATING
±138 PSF FOR MODEL ELF6375DXD
±148 PSF FOR Ⓐ MODEL ELE6375DXD
LARGE MISSILE IMPACT RESISTANCE

NOTES:

1) DIMENSIONS SHOWN ARE ACTUAL LOUVER SIZE.
2) LOUVER DESIGN INCORPORATES STRUCTURAL SUPPORTS, ATTACHED TO REAR OF LOUVER TO WITHSTAND VARIOUS WINDLOADS (REF SCHED FOR WINDLOAD PSF) REF SCHEDULE, ASSY, OR PLAN VIEW FOR SIZE, QTY., & LOCATION.
3) ⬭ INDICATES TAG: LETTER= ASSY #= SHIP SECTION.
4) H.V.B.S. = HIDDEN VERTICAL BLADE SUPPORT.
   C-C = CENTER TO CENTER DIM OF HVBS. FOUND ON SCHED
   QTY = QUANTITY OF HVBS. FOUND ON SCHEDULE
   H.H.B.S. = HORZ HIDDEN BLADE SUPPORT
   L.D. = LOUVER DIMENSION.
   L.D.D. = LOUVER DOOR DIMENSION.
   N.I.R.C. = NOT IN RUSKIN CONTRACT.
   O.L.D. = OUT SIDE LOUVER DIMENSION.
   U.N.O. = UNLESS NOTED OTHERWISE
   OPP = OPPOSITE.
   O.S.D. = OUTSIDE SLEEVE DIMENSION
   P.S.F. = POUNDS PER SQUARE FOOT
   R.O. = ROUGH OPENING.
   SIM = SIMILAR
   S.D. = SUB-FRAME DIMENSION.
   S.S. = SHIP SECTION.
   S.S.D. = SHIP SECTION DIMENSION
   TYP = TYPICAL
5) NOTCHING OF HVBS AROUND STRUCTURE AND/OR OBSTRUCTIONS IN THE FIELD, SHALL BE THE RESPONSIBILITY OF INSTALLATION CONTRACTOR. IF CONTINUOUS ANGLES AND/OR EXTENDED SILLS ARE ORDERED NOTCHING OF THE ANGLES AND SILLS AROUND OBSTRUCTIONS (HVBS & FIELD CONDITIONS) SHALL BE THE RESPONSIBILITY OF THE INSTALLATION CONTRACTOR.
6) MULTIPLE SECTION LOUVER/SCREEN ASSEMBLIES REQUIRE FIELD DRILLING OF SUPPORTS, FRAMES AND OPTIONAL CLIP ANGLES BY THE INSTALLATION CONTRACTOR. (N.J.R.C.)
7) SEALING REQUIREMENTS AROUND LOUVERS, BETWEEN ADJOINING SILLS, FRAMES AND WATERSTOPS FOR ARCHITECTURAL STYLE CONTINUOUS BLADE LOUVERS SHALL BE THE RESPONSIBILITY OF THE INSTALLATION CONTRACTOR.
8) IF BITUMINOUS COMPOUNDS ARE REQUIRED, BETWEEN DISSIMILAR METALS OR LOUVER AND OTHER SURFACES, IT IS THE RESPONSIBILITY OF THE INSTALLATION CONTRACTOR TO SUPPLY AND PROPERLY APPLY IT.
9) WHEN CLIP ANGLES ARE ORDERED AS AN OPTION THEY ARE 1 1/2" X 1 1/2" X 1/8" X 2" U.N.O REF. DETAILS AND ARE INSTALLED 24" ON CENTER, 8" FROM CORNERS AND @ SHIP SECTION JOINTS. THE SIZE AND ANCHOR TYPE USED TO FASTEN TO THE STRUCTURE SHALL BE THE RESPONSIBILITY OF THE ENGINEER OF RECORD ON THE PROJECT. (NIRC)
10) REF DWGS: SEE #60-0222117-02D THRU 09D FOR DETAILS.
11) SLEEVE JOINT TO HAVE CONTINUOUS WELD & GRIND SMOOTH SO THAT THE WELD DOES NOT REDUCE OPENING
12) ALL EXPOSED EDGES AND SURFACES, WHEN VIEWED FROM FRONT, ARE TO BE PAINTED TO MATCH LOUVER.

LEGEND

1. NOT USED
2. NOT USED
3. CD-102 DAMPERS ARE TO BE INSTALLED BEHIND ELF6375DXD LOUVERS IN A 1/8" THICK ALUMINUM SLEEVE. (REF. SCHEDULE FOR SLEEVE DEPTH) DAMPER'S ARE TO BE SHIPPED LOOSE DUE TO SIZE & WEIGHT LIMITATION'S AND INSTALLED IN THE FIELD. REF DRAWING #60-22117-09D FOR CD-102 ASSEMBLIES AND ADDITIONAL INFORMATION.
4. NOT USED
5. REAR OF LOUVER TO BE 100% .063" ALUMINUM BLANKED OFF. FINISH TO MATCH LOUVER.
6. HVBS MEMBER (2-059'S) REQUIRED BEHIND VISIBLE MULLION REF DET 2/02D

12/21/2008

IF LOUVER ASSEMBLY IS BEING SPLIT & IT REQUIRES A SLEEVE, THE SLEEVE WILL ALSO BE SPLIT AND BE CAULKED TOGETHER IN FIELD.

FOR OFFICE USE ONLY

Approved as complying with the Florida Building Code
Date 01/28/2009
NOC 08-1110.12
Miami Dade Product Control Division
By

ENGINEER OF RECORD:
DANIEL J. RAU

ENGINEERING DISCIPLINE:
CIVIL ENGINEER

STATE OF FLORIDA #63636

REV.	DESCRIPTION	DATE	REV'D BY	CHK'D BY	APP'D BY
B	CHANGE SILL TO 70-021130-00B	4/21/08	RFM	DJR	DJR
A	ADDED ASSY "F"	10/18/00	JW	VMA	DJR

TOLERANCES UNLESS SPECIFIED OTHERWISE: 3 PLACE .XXX ±.010; 2 PLACE .XX ±.020; ANGLE DIMENSIONS ± 2°; USE WIQ-007 & 008

NOTE:
1) ALL DIMENSIONS ARE GIVEN IN INCHES.
2) ALL EXPOSED SURFACES MUST BE FREE OF DIE LINES.
3) ALUMINUM ASSOCIATION TOLERANCES APPLY UNLESS OTHERWISE SPECIFIED.
4) ** EXTRUDER SPECIFIC ID MARK: .008R x .008DP

THIS INFORMATION DISCLOSED HEREIN WAS ORIGINATED BY AND IS THE PROPERTY OF RELIABLE PRODUCTS, AND EXCEPT FOR USES EXPRESSLY GRANTED TO THE UNITED STATES GOVERNMENT, RELIABLE PRODUCTS RESERVES ALL PATENT, PROPRIETARY, DESIGN, USE, SALE, MANUFACTURING AND REPRODUCTION RIGHTS THERETO. THIS DOES NOT APPLY TO ANY VENDOR PARTS.

CTR	CENTER	OC	ON CENTER
CL	CENTER LINE	OD	OUTSIDE DIAMETER
C-C	CENTER TO CENTER	OR	OUTSIDE RADIUS
CHAM	CHAMFER	PI	POINT OF INTERSECTION
DAT	DATUM	R	FULL RADIUS
DET	DETAIL	REF	REFERENCE
E-E	END TO END	SYM	SYMMETRICAL
EXP	EXPOSED	TAN	TANGENT
ID	INSIDE DIAMETER	TYP	TYPICAL
IR	INSIDE RADIUS		

RELIABLE PRODUCTS
P.O. BOX 580, 1300 ENTERPRISE RD
GENEVA, ALABAMA 36340-0580
PH: (334) 684-3621 FAX: (334) 684-3680

AREA	EST. PER.	EST. WT/FT.
–	–	–
ALLOY & TEMPER	**UNSPEC. RADII**	**UNSPEC. WALL**
–	–	

DWN:	JTK	CHK:		APPV:	
DATE:	3/6/98	DATE:		DATE:	

PART DESC.
6375DC LOUVER SCHED., SPECS, ASSY'S AND NOTES

SHEET 1 OF 9

SCALE: NTS | ECN: – | DATE:

DWG No. 60-022117-01D | REV.

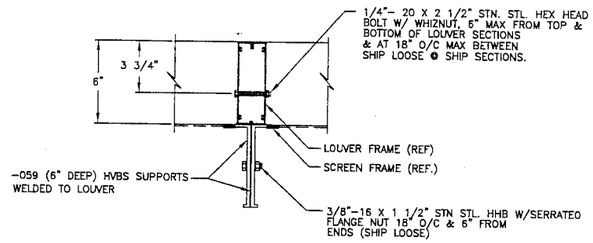

1 / – NOT USED
N.T.S.

© 2 / 01D VISIBLE MULLION CONNECTION DETAIL
SCALE: N.T.S.

3 / 01D NOT USED
SCALE: N.T.S.

4 / 01D NOT USED
SCALE: N.T.S.

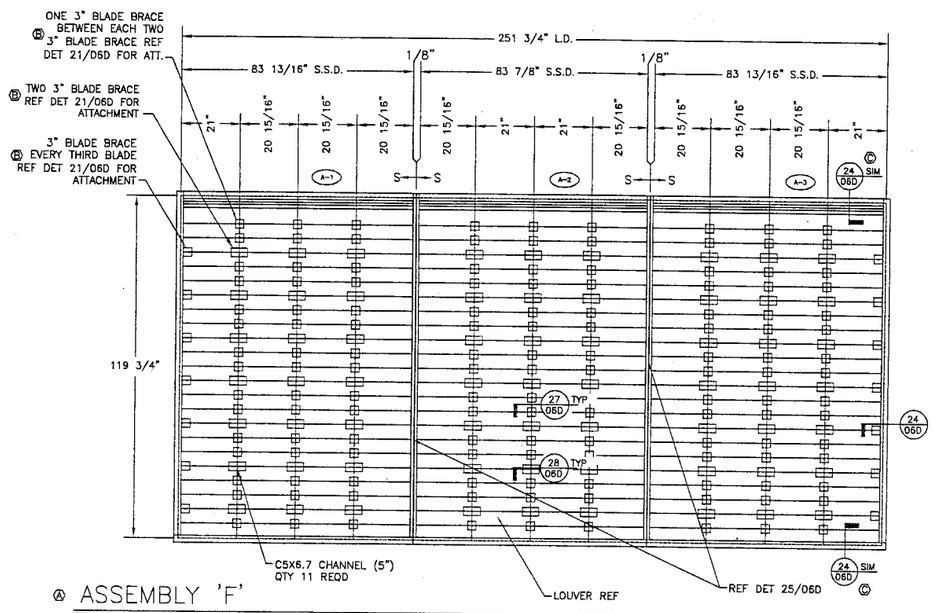

Ⓐ ASSEMBLY 'F'
NTS
DESIGN PRESSURE RATING 160PSF
FRONT VIEW

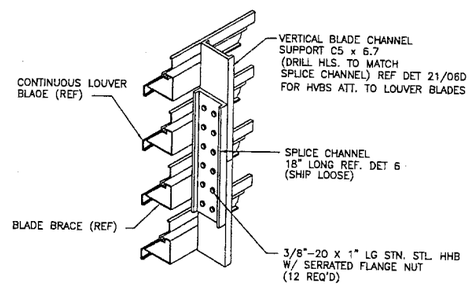

5 / 01D C5" X 6.7# HVBS SPLICE DETAIL
SCALE: N.T.S.

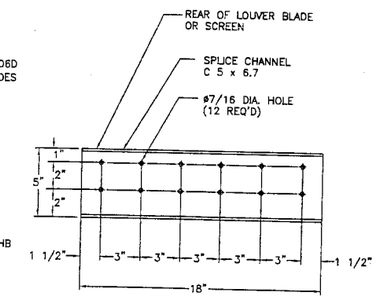

6 / – C5" X 6.7# SPLICE PLATE DETAIL
SCALE: N.T.S.
MATERIAL: C5" X 6.7# STRUCTURAL CHANNEL

Ⓐ NOTES:

1) WELD BIRD SCREEN TO SCREEN FRAME @ 12" C–C.
2) THE STRUCTURE SUBSTRATE THAT HOLDS THE LOUVER IN PLACE, IS ASSUMED TO BE STRUCTURALLY SOUND AND STABLE TO TAKE THE LOADS DISPERSED BY THE LOUVER.
3) LOUVER IS NONBEARING AND IS NOT DESIGNED TO WITHSTAND BUILDING DEADLOADS.

NOTES:
1) REFERENCE DRAWING #60–022117–01D FOR SCHEDULE, SPECIFICATION'S, ASSEMBLIES, DETAIL'S & ADDITIONAL NOTES

FOR OFFICE USE ONLY

Approved as complying with the Florida Building Code
Date: 01/29/2009
NOA: 08-1110.12
Miami-Dade Product Control
Division:
By:

12/21/2008

ENGINEER OF RECORD: DANIEL J. RAU
ENGINEERING DISCIPLINE: CIVIL ENGINEER
STATE OF FLORIDA #63636

REV.	DESCRIPTION	DATE	REV'D BY	CHK'D BY	APP'D BY
D	REVISED ENGINEER OF RECORD	4/21/08	DWS	DJR	DJR
C	REVD DET 2/OOD, ADDED SECTION DETAIL 24/05D	1/11/00	JW	VMA	
B	DET 1/– NOTE USED REVD NOTES ON ASSY 'F'		JW		
A	ADDED ASSY "F"	10/18/00	JW	VMA	DJR

NOTE:
1) ALL DIMENSIONS ARE GIVEN IN INCHES.
2) ALL EXPOSED SURFACES MUST BE FREE OF DIE LINES.
3) ALUMINUM ASSOCIATION TOLERANCES APPLY UNLESS OTHERWISE SPECIFIED.
4) ** EXTRUDER SPECIFIC ID MARK: .008DP

TOLERANCES UNLESS SPECIFIED OTHERWISE
3 PLACE .XXX ±.010
2 PLACE .XX ±.020
ANGLE DIMENSIONS ± 2°
USE WQ-007 & 008

THIS INFORMATION DISCLOSED HEREIN WAS ORIGINATED BY AND IS THE PROPERTY OF RELIABLE PRODUCTS, AND EXCEPT FOR USES EXPRESSLY GRANTED TO THE UNITED STATES GOVERNMENT, RELIABLE PRODUCTS RESERVES ALL PATENT, PROPRIETARY, DESIGN, USE, SALE, MANUFACTURING AND REPRODUCTION RIGHTS THERETO. THIS DOES NOT APPLY TO ANY VENDOR PARTS.

CTR	CENTER	OC	ON CENTER
CL	CENTER LINE	OD	OUTSIDE DIAMETER
C–C	CENTER TO CENTER	OR	OUTSIDE RADIUS
CHAM	CHAMFER	PI	POINT OF INTERSECTION
DAT	DATUM	R	FULL RADIUS
DET	DETAIL	REF	REFERENCE
E–E	END TO END	SYM	SYMMETRICAL
EXP	EXPOSED	TAN	TANGENT
ID	INSIDE DIAMETER	TYP	TYPICAL
IR	INSIDE RADIUS		

RELIABLE PRODUCTS
P.O. BOX 580, 1300 ENTERPRISE RD
GENEVA, ALABAMA 36340–0580
PH: (334) 684–3621 FAX: (334) 684–3680

AREA	EST. PER.	EST. WT/FT.
–	–	–
ALLOY & TEMPER	UNSPEC. RADII	UNSPEC. WALL
–	–	

DWN:	JTK	CHK:		APPV:	
DATE:	3/6/98	DATE:		DATE:	

PART DESC.
6375DC LOUVER
DETAILS AND NOTES
SHEET 2 OF 9

SCALE: NTS | ECN: – | DATE:

DWG No. 60-022117-02D | REV.

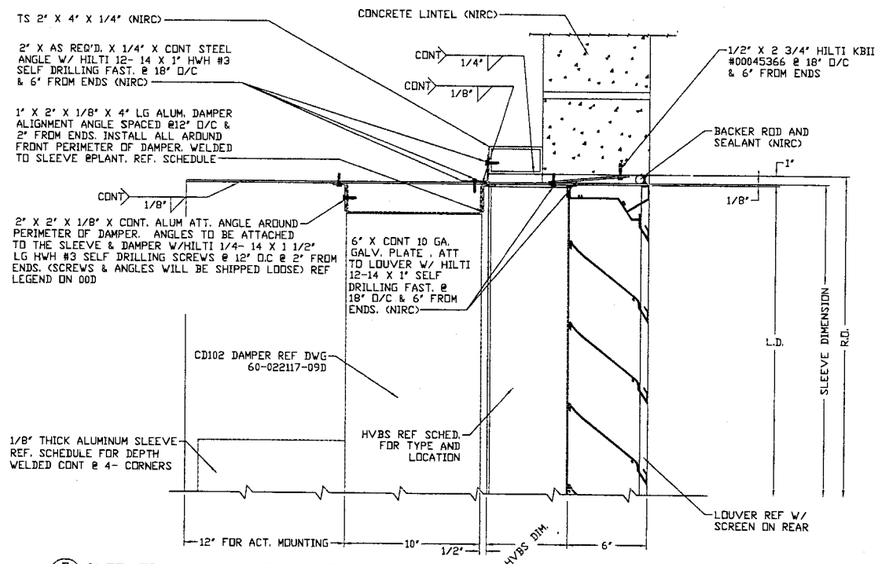

7 / 00D SLEEVED LOUVER DETAIL @HEAD (JAMB SIM)
SCALE: 3" = 1'-0"

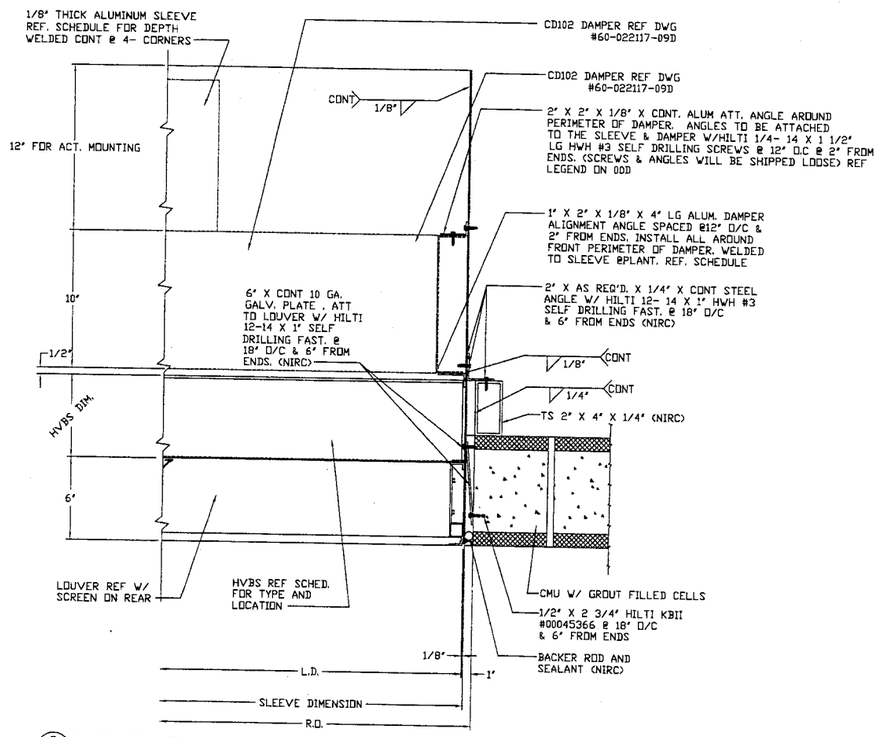

8 / 00D SLEEVED LOUVER DETAIL @ JAMB
SCALE: 3" = 1'-0"

10 NOT USED
SCALE: N.T.S.

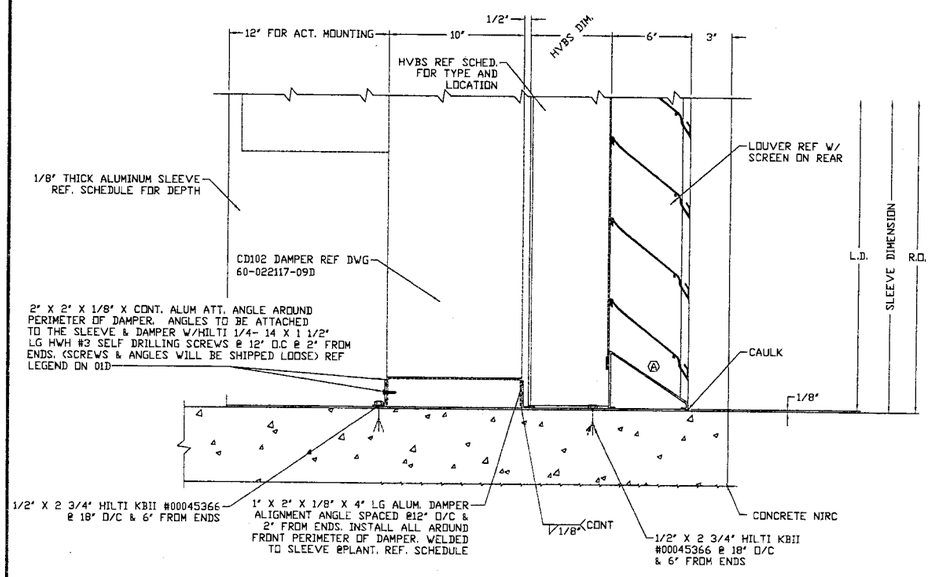

9 / 01D SLEEVED LOUVER DETAIL @SILL
SCALE: 3" = 1'-0"

FOR FASTENER LOADS REF. DWG. 60-022117-07D

NOTE:
ALL STRUCTURAL TUBING SHALL BE CONTINUOUS WELDED W/ 1/4" FILLET WELD ALL AROUND WHERE THEY MEET.

NOTES:
1) REFERENCE DRAWING #60-022117-01D FOR SPECIFICATIONS, SCHEDULE, ASSEMBLIES AND ADDITIONAL NOTES

FOR OFFICE USE ONLY

Approved as complying with the Florida Building Code
Date: 01/28/2009
NOA# 08-1110.12
Miami-Dade Product Control Division
By

12/21/2008

ENGINEER OF RECORD: DANIEL J. RAU
ENGINEERING DISCIPLINE: CIVIL ENGINEER
STATE OF FLORIDA #63636

REV.	DESCRIPTION	DATE	REV'D BY	CHK'D BY	APP'D BY
A	CHANGE SILL TO 70-021130-00B, ENGR OF REC	4/14/08	RFM	DJR	DJR

TOLERANCES UNLESS SPECIFIED OTHERWISE
3 PLACE .XXX ±.010
2 PLACE .XX ±.020
ANGLE DIMENSIONS ± 2°
USE W10-007 & 008

NOTE:
1) ALL DIMENSIONS ARE GIVEN IN INCHES.
2) ALL EXPOSED SURFACES MUST BE FREE OF DIE LINES.
3) ALUMINUM ASSOCIATION TOLERANCES APPLY UNLESS OTHERWISE SPECIFIED.
4) ** EXTRUDER SPECIFIC ID MARK: .008R x .008DP

THIS INFORMATION DISCLOSED HEREIN WAS ORIGINATED BY AND IS THE PROPERTY OF RELIABLE PRODUCTS, AND EXCEPT FOR USES EXPRESSLY GRANTED TO THE UNITED STATES GOVERNMENT, RELIABLE PRODUCTS RESERVES ALL PATENT, PROPRIETARY, DESIGN, USE, SALE, MANUFACTURING AND REPRODUCTION RIGHTS THERETO. THIS DOCUMENT DOES NOT APPLY TO ANY VENDOR PARTS.

CTR	CENTER	OC	ON CENTER
CL	CENTER LINE	OD	OUTSIDE DIAMETER
C-C	CENTER TO CENTER	OR	OUTSIDE RADIUS
CHAM	CHAMFER	PI	POINT OF INTERSECTION
DAT	DATUM	R	FULL RADIUS
DET	DETAIL	REF	REFERENCE
E-E	END TO END	SYM	SYMMETRICAL
EXP	EXPOSED	TAN	TANGENT
ID	INSIDE DIAMETER	TYP	TYPICAL
IR	INSIDE RADIUS		

RELIABLE PRODUCTS
P.O. BOX 580, 1300 ENTERPRISE RD
GENEVA, ALABAMA 36340-0580
PH: (334) 684-3621 FAX: (334) 684-3680

AREA	EST. PER.	EST. WT/FT.
-	-	-
ALLOY & TEMPER	UNSPEC. RADII	UNSPEC. WALL
-	-	

DWN:	JTK	CHK:		APPV:	
DATE:	3/6/98	DATE:		DATE:	

PART DESC.
6375DC LOUVER
DETAILS AND NOTES
SHEET 3 OF 9

SCALE: NTS | ECN: 3347 | DATE:

DWG No. 60-022117-03D | REV.

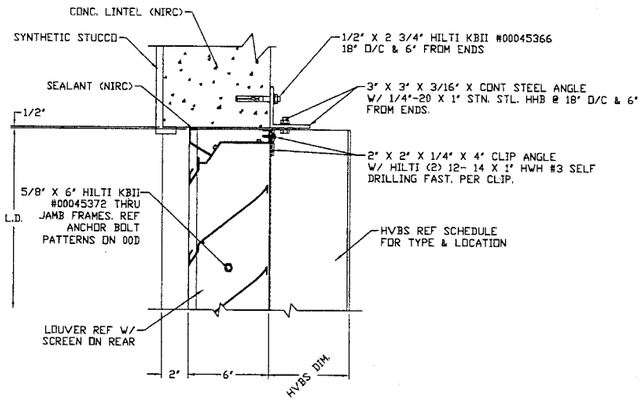

11 / 01D LOUVER DETAIL @HEAD
SCALE: 3" = 1'-0" REFERENCE DRAWING #60-0222117-01D FOR ANCHOR BOLT SPACING

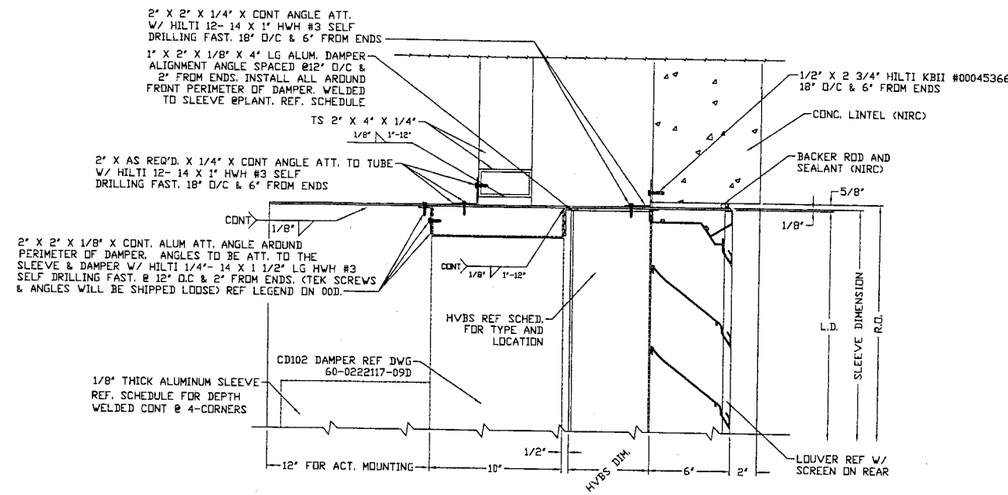

12 / 01D SLEEVED LOUVER DETAIL @HEAD (JAMB SIM)
SCALE: 3" = 1'-0"

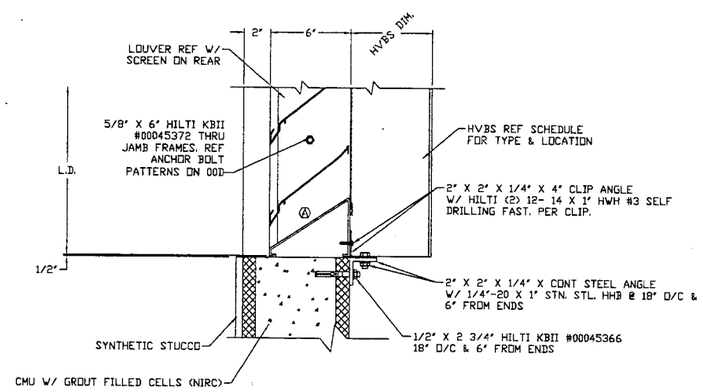

13 / 01D LOUVER DETAIL @SILL (JAMB SIM)
SCALE: 3" = 1'-0" REFERENCE DRAWING #60-0222117-01D FOR ANCHOR BOLT SPACING

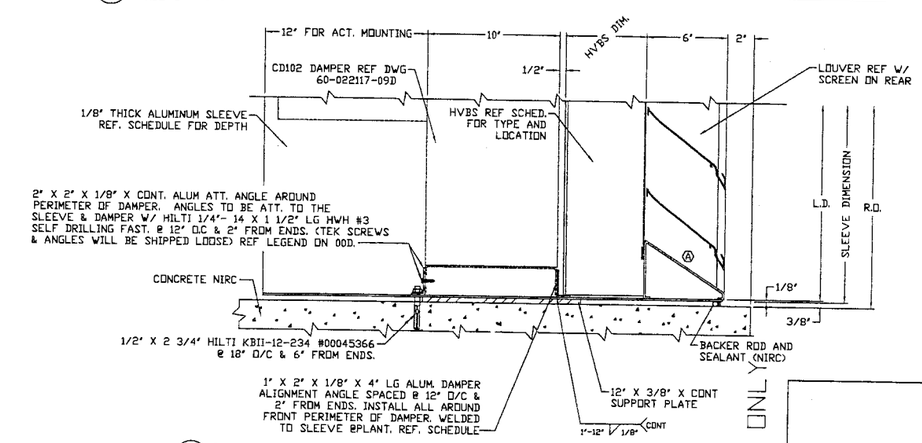

14 / 01D SLEEVED LOUVER DETAIL @SILL
SCALE: 3" = 1'-0"

FOR FASTENER LOADS REF.
DWG. 60-022117-07D & -08D

NOTES:
1) REFERENCE DRAWING #60-022117-01D FOR SPECIFICATIONS, SCHEDULE, ASSEMBLIES AND ADDITIONAL NOTES

FOR OFFICE USE ONLY

Approved as complying with the
Florida Building Code
Date: 01/28/2009
NOA: 08-1110.12
Master Date: Product Control
Division:
By:

12/21/2008

ENGINEER OF RECORD:
DANIEL J. RAU

ENGINEERING DISCIPLINE:
CIVIL ENGINEER

STATE OF FLORIDA #63636

REV.	DESCRIPTION	DATE	BY	CHK'D BY	APP'D BY
A	CHANGE SILL TO 70-021130-00B, ENGR OF REC	4/14/08	RFM	DJR	DJR

TOLERANCES UNLESS SPECIFIED OTHERWISE
3 PLACE .XXX ±.010
2 PLACE .XX ±.020
ANGLE DIMENSIONS ± 2°
USE WIG-007 & 008

NOTE:
1) ALL DIMENSIONS ARE GIVEN IN INCHES.
2) ALL EXPOSED SURFACES MUST BE FREE OF DIE LINES.
3) ALUMINUM ASSOCIATION TOLERANCES APPLY UNLESS OTHERWISE SPECIFIED.
4) ** EXTRUDER SPECIFIC ID MARK: .008R x .008DP

THIS INFORMATION DISCLOSED HEREIN WAS ORIGINATED BY AND IS THE PROPERTY OF RELIABLE PRODUCTS, AND EXCEPT FOR USES EXPRESSLY GRANTED TO THE UNITED STATES GOVERNMENT, RELIABLE PRODUCTS RESERVES ALL PATENT, PROPRIETARY, DESIGN, USE, SALE, MANUFACTURING AND REPRODUCTION RIGHTS THERETO. THIS DOES NOT APPLY TO ANY VENDOR PARTS.

CTR	CENTER	DC	ON CENTER
CL	CENTER LINE	OD	OUTSIDE DIAMETER
C-C	CENTER TO CENTER	OR	OUTSIDE RADIUS
CHAM	CHAMFER	PI	POINT OF INTERSECTION
DAT	DATUM	R	FULL RADIUS
DET	DETAIL	REF	REFERENCE
E-E	END TO END	SYM	SYMMETRICAL
EXP	EXPOSED	TAN	TANGENT
ID	INSIDE DIAMETER	TYP	TYPICAL
IR	INSIDE RADIUS		

RELIABLE PRODUCTS
P.O. BOX 580, 1300 ENTERPRISE RD
GENEVA, ALABAMA 36340-0580
PH: (334) 684-3621 FAX: (334) 684-3680

AREA	EST. PER.	EST. WT/FT.
-	-	-
ALLOY & TEMPER	UNSPEC. RADII	UNSPEC. WALL
-	-	

DWN:	JTK	CHK:		APPV:	
DATE:	3/6/98	DATE:		DATE:	

PART DESC.
6375DC LOUVER
DETAILS AND NOTES

SHEET 4 OF 9

SCALE: NTS | ECN: - | DATE:

DWG No. 60-022117-04D | REV.

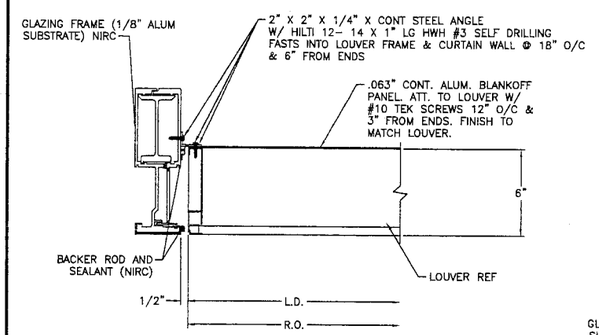

15 / 01D LOUVER DETAIL @JAMB
SCALE: 3" = 1'-0"

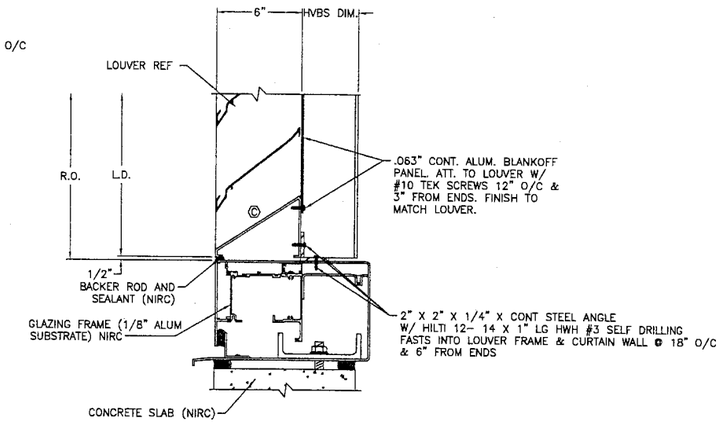

16 / 01D LOUVER DETAIL @SILL
SCALE: 3" = 1'-0"

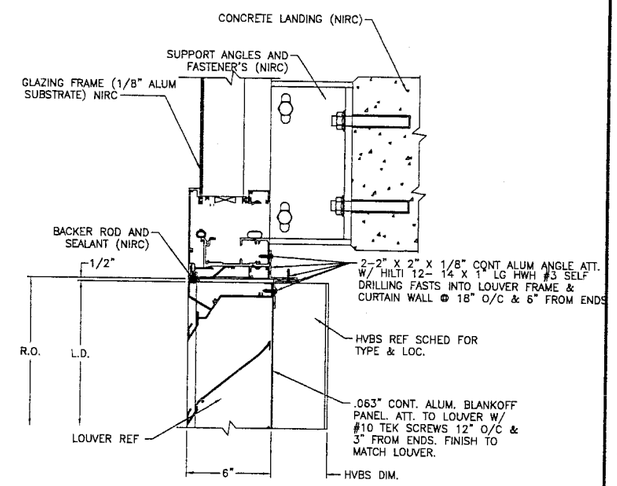

17 / 01D LOUVER DETAIL @HEAD
SCALE: 3" = 1'-0"

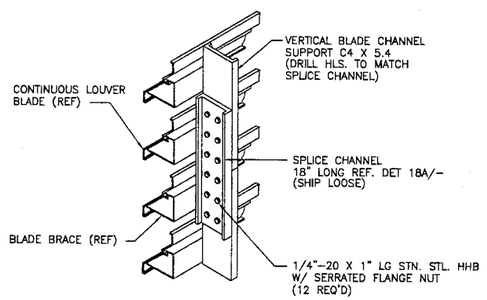

18 / 01D C4" X 5.4# HVBS SPLICE DETAIL
SCALE: N.T.S.

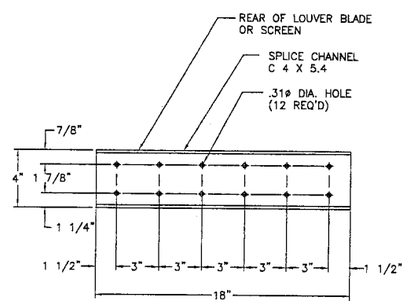

18A / - SPLICE CHANNEL DETAIL
SCALE: N.T.S.

FOR FASTENER LOADS REF. DWG. 60-022117-07D

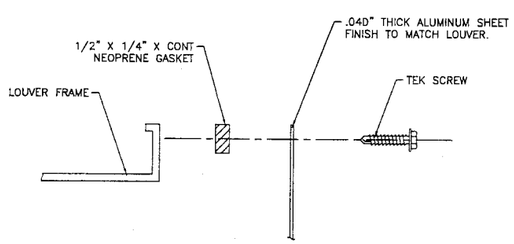

19 / - .040 BLANK-OFF
N.T.S.

NOTES:
1) REFERENCE DRAWING #60-022117-01D FOR SPECIFICATIONS, SCHEDULE, ASSEMBLIES AND ADDITIONAL NOTES

12/21/2008

FOR OFFICE USE ONLY

Approved as complying with the Florida Building Code
Date 01/29/2009
NOA# 08-1110.12
Miami Dade Product Control Division
By

REV.	DESCRIPTION	DATE	REV'D BY	CHK'D BY	APP'D BY
C	CHANGE SILL TO 70-021130-00B, ENGR OF REC	4/14/08	RFM	DJR	DJR
B	REV'D DET 21/00D & DET 28/01D		JW		

TOLERANCES UNLESS SPECIFIED OTHERWISE
3 PLACE .XXX ± .010
2 PLACE .XX ± .020
ANGLE DIMENSIONS ± 2°
USE MO-007 & 008

NOTE:
1) ALL DIMENSIONS ARE GIVEN IN INCHES.
2) ALL EXPOSED SURFACES MUST BE FREE OF DIE LINES.
3) ALUMINUM ASSOCIATION TOLERANCES APPLY UNLESS OTHERWISE SPECIFIED.
4) ** EXTRUDER SPECIFIC ID MARK: .008R x .008DP

THIS INFORMATION DISCLOSED HEREIN WAS ORIGINATED BY AND IS THE PROPERTY OF RELIABLE PRODUCTS, AND EXCEPT FOR USES EXPRESSLY GRANTED TO THE UNITED STATES GOVERNMENT, RELIABLE PRODUCTS RESERVES ALL PATENT, PROPRIETARY, DESIGN, USE, SALE, MANUFACTURING AND REPRODUCTION RIGHTS THERETO. THIS DOES NOT APPLY TO ANY VENDOR PARTS.

CTR	CENTER	OC	ON CENTER
CL	CENTER LINE	OD	OUTSIDE DIAMETER
C-C	CENTER TO CENTER	OR	OUTSIDE RADIUS
CHAM	CHAMFER	PI	POINT OF INTERSECTION
DAT	DATUM	R	FULL RADIUS
DET	DETAIL	REF	REFERENCE
E-E	END TO END	SYM	SYMMETRICAL
EXP	EXPOSED	TAN	TANGENT
ID	INSIDE DIAMETER	TYP	TYPICAL
IR	INSIDE RADIUS		

RELIABLE PRODUCTS
P.O. BOX 580, 1300 ENTERPRISE RD
GENEVA, ALABAMA 36340-0580
PH: (334) 684-3621 FAX: (334) 684-3680

AREA	EST. PER.	EST. WT/FT.
-	-	-
ALLOY & TEMPER	UNSPEC. RADII	UNSPEC. WALL
-	-	

DWN:	JTK	CHK:		APPV:	
DATE:	3/6/98	DATE:		DATE:	

PART DESC.
6375DC LOUVER LOUVER
DETAILS AND NOTES
SHEET 5 OF 9

SCALE: NTS | ECN: - | DATE:

DWG No. 60-022117-05D | REV.

ENGINEER OF RECORD: DANIEL J. RAU
ENGINEERING DISCIPLINE: CIVIL ENGINEER
STATE OF FLORIDA #63636

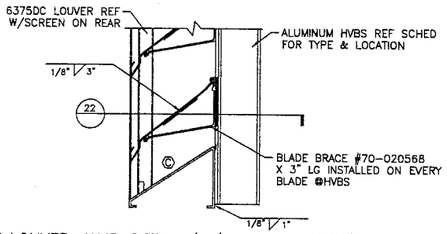

20 / 01D LOUVER JAMB DETAIL (W/ALUMINUM HVBS)
N.T.S. (SCREEN FRAME & SCREEN REMOVED FOR CLARITY)

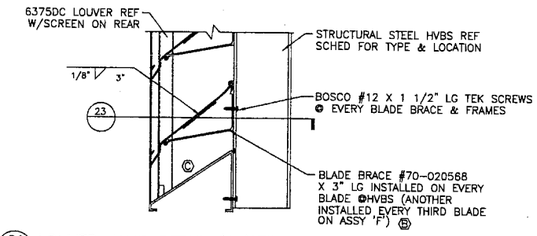

21 / 01D LOUVER JAMB DETAIL (W/STRUCTURAL STEEL HVBS)
N.T.S. (SCREEN FRAME & SCREEN REMOVED FOR CLARITY)

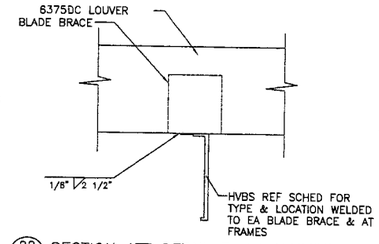

22 / – SECTION ATT DETAIL THRU ALUMINUM HVBS
N.T.S. (SCREEN FRAME & SCREEN REMOVED FOR CLARITY)

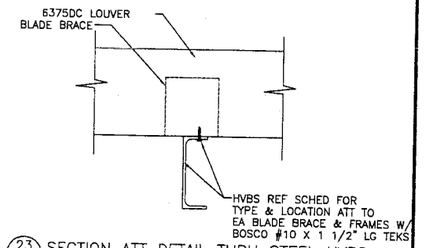

23 / – SECTION ATT DETAIL THRU STEEL HVBS
N.T.S. (SCREEN FRAME & SCREEN REMOVED FOR CLARITY)

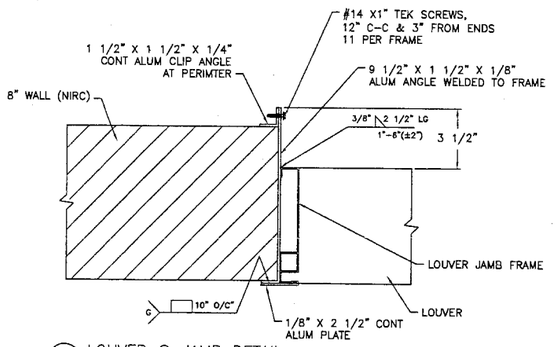

Ⓐ 24 / 02D LOUVER @ JAMB DETAIL
N.T.S.

NOTE:
1) DIMENSION "X" = 2 3/4" FOR 4" DOUBLE DRAINABLE LOUVERS, 3 3/4" FOR 6" DOUBLE DRAINABLE LOUVER'S & 1/2 OF LOUVER FRAME DEPTH FOR ALL OTHER LOUVER'S.

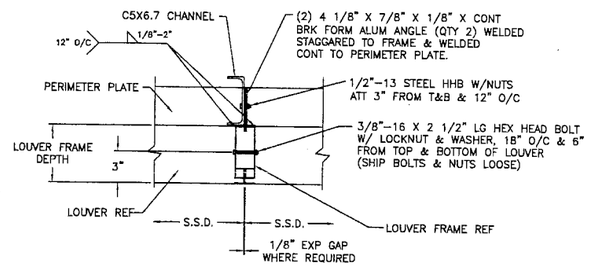

Ⓐ 25 / 02D VISIBLE MULLION CONNECTION DETAIL
N.T.S.

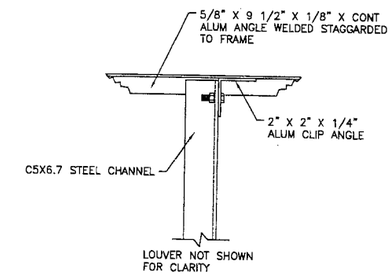

Ⓐ 26 / – HVBS HEAD DETAIL @ ANGLE FRAME (SILL SIM)
N.T.S.
REAR VIEW

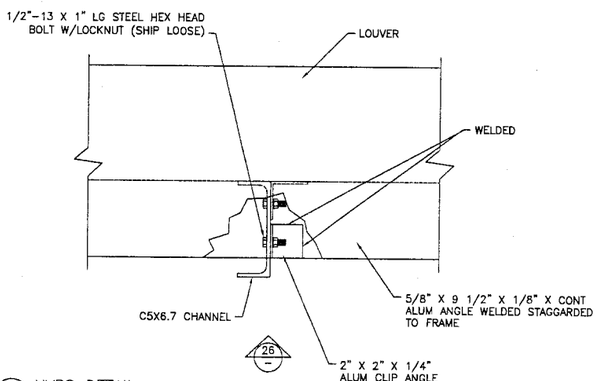

Ⓐ 27 / 02D HVBS DETAIL
N.T.S.

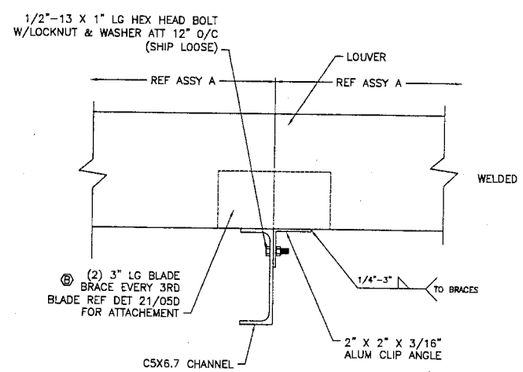

Ⓐ 28 / 02D HVBS DETAIL
N.T.S.

NOTES:
1) REFERENCE DRAWING #60-022117-01D FOR SPECIFICATION'S, SCHEDULE, ASSEMBLIES & ADDITIONAL NOTES

FOR OFFICE USE ONLY

Approved as complying with the Florida Building Code
Date 01/28/2009
NOA# 08-1110.12
Miami Dade Product Control Division
By

12/21/2008

ENGINEER OF RECORD: DANIEL J. RAU
ENGINEERING DISCIPLINE: CIVIL ENGINEER
STATE OF FLORIDA #63636

REV.	DESCRIPTION	DATE	REV'D BY	CHK'D BY	APP'D BY
C	CHANGE SILL TO 70-021130-00B, ENGR OF REC	4/14/08	RFM	DJR	DJR
B	REVD DET 21/00D & DET 28/01D	10/18/00	JW		
A	ADDED DET 24,25,26,27 & 28	10/18/00	JW	VMA	

NOTE:
1) ALL DIMENSIONS ARE GIVEN IN INCHES.
2) ALL EXPOSED SURFACES MUST BE FREE OF DIE LINES.
3) ALUMINUM ASSOCIATION TOLERANCES APPLY UNLESS OTHERWISE SPECIFIED.
4) ** EXTRUDER SPECIFIC ID MARK: .008R x .008DP

TOLERANCES UNLESS SPECIFIED OTHERWISE
3 PLACE .XXX ±.010
2 PLACE .XX ±.020
ANGLE DIMENSIONS ± 2°
USE WIQ-007 & 008

THIS INFORMATION DISCLOSED HEREIN WAS ORIGINATED BY AND IS THE PROPERTY OF RELIABLE PRODUCTS, AND EXCEPT FOR USES EXPRESSLY GRANTED TO THE UNITED STATES GOVERNMENT, RELIABLE PRODUCTS RESERVES ALL PATENT, PROPRIETARY, DESIGN, USE, SALE, MANUFACTURING AND REPRODUCTION RIGHTS THERETO. THIS DOES NOT APPLY TO ANY VENDOR PARTS.

CTR	CENTER	OC	ON CENTER
CL	CENTER LINE	OD	OUTSIDE DIAMETER
C-C	CENTER TO CENTER	OR	OUTSIDE RADIUS
CHAM	CHAMFER	PI	POINT OF INTERSECTION
DAT	DATUM	R	FULL RADIUS
DET	DETAIL	REF	REFERENCE
E-E	END TO END	SYM	SYMMETRICAL
EXP	EXPOSED	TAN	TANGENT
ID	INSIDE DIAMETER	TYP	TYPICAL
IR	INSIDE RADIUS		

RELIABLE PRODUCTS
P.O. BOX 580, 1300 ENTERPRISE RD
GENEVA, ALABAMA 36340-0580
PH: (334) 684-3621 FAX: (334) 684-3680

AREA	EST. PER.	EST. WT/FT.
–	–	–
ALLOY & TEMPER	UNSPEC. RADII	UNSPEC. WALL
–	–	

DWN:	JTK	CHK:	VMA	APPV:	
DATE:	04/23/98	DATE:	10/28/98	DATE:	

PART DESC.
6375DC LOUVER
DETAILS AND NOTES
SHEET 6 OF 9

SCALE: NTS | ECN: – | DATE:

DWG No. 60-022117-06D | REV.

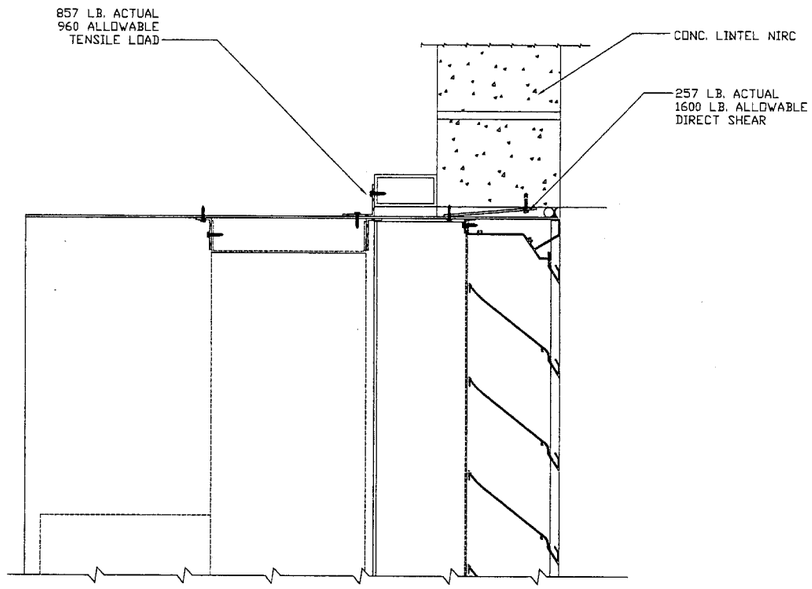

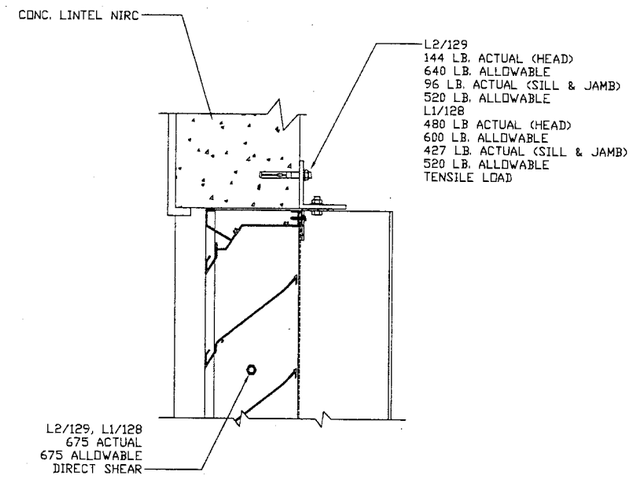

LOUVER DETAIL @HEAD (JAMB & SILL SIM) (138 PSF) REF DET 11 & 13/04D

@ ASSEMBLIES A & B

ALL CONCRETE AND MASONRY ANCHORS FOR GROUT FILLED MASONRY CELLS ARE ½" HILTI KWICK BOLT II W/ 2½" MIN. EMBEDMENT, 3½" MIN. EDGE DISTANCE AND 5" MIN. SPACING.

ALLOWABLE TENSION/SHEAR VALUES FOR THE FASTENERS IN 1/8" ALUMINUM ARE PER "HILTI PRODUCT TECHNICAL GUIDE"

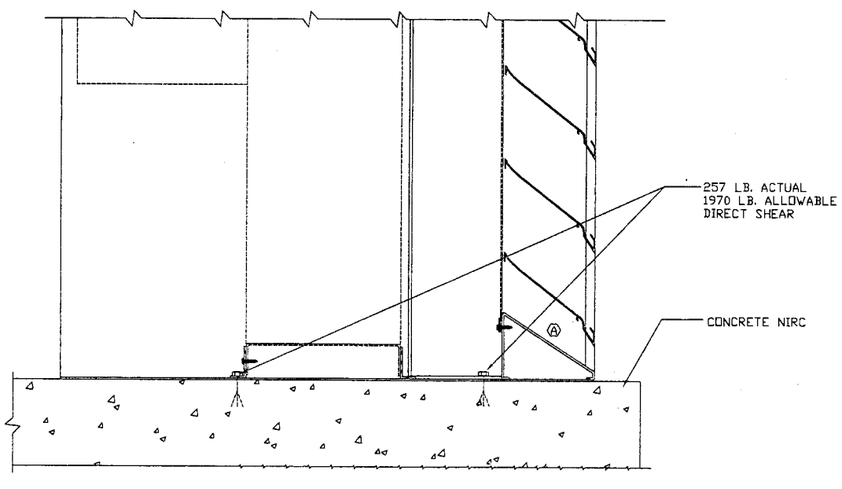

SLEEVED LOUVER DETAILS (JAMB & SILL) (148 PSF) REF DET 7,8, & 9/03D

SCALE: 3" = 1'-0"

@ ASSEMBLY C

FOR OFFICE USE ONLY

Approved as complying with the Florida Building Code
Date: 01/28/2009
NOA: 08-1110.12
Miami Dade Product Control
Division
By

12/21/2008

ENGINEER OF RECORD: DANIEL J. RAU.

ENGINEERING DISCIPLINE: CIVIL ENGINEER

STATE OF FLORIDA #63636

REV.	DESCRIPTION	DATE	REV'D BY	CHK'D BY	APP'D BY
A	CHANGE SILL TO 70-021130-00B, ENGR OF REC	4/14/08	RFM	DJR	DJR

NOTE:
1) ALL DIMENSIONS ARE GIVEN IN INCHES.
2) ALL EXPOSED SURFACES MUST BE FREE OF DIE LINES.
3) ALUMINUM ASSOCIATION TOLERANCES APPLY UNLESS OTHERWISE SPECIFIED.
4) ** EXTRUDER SPECIFIC ID MARK: .008R x .008DP

TOLERANCES UNLESS SPECIFIED OTHERWISE
3 PLACE XXX ±.010
2 PLACE XX ±.020
ANGLE DIMENSIONS ± 2°
USE W10-007 & 008

THIS INFORMATION DISCLOSED HEREIN WAS ORIGINATED BY AND IS THE PROPERTY OF RELIABLE PRODUCTS, AND EXCEPT FOR USES EXPRESSLY GRANTED TO THE UNITED STATES GOVERNMENT, RELIABLE PRODUCTS RESERVES ALL PATENT, PROPRIETARY, DESIGN, USE, SALE, MANUFACTURING AND REPRODUCTION RIGHTS THERETO. THIS DOES NOT APPLY TO ANY VENDOR PARTS.

CTR	CENTER	OC	ON CENTER
CL	CENTER LINE	OD	OUTSIDE DIAMETER
C-C	CENTER TO CENTER	OR	OUTSIDE RADIUS
CHAM	CHAMFER	PI	POINT OF INTERSECTION
DAT	DATUM	R	FULL RADIUS
DET	DETAIL	REF	REFERENCE
E-E	END TO END	SYM	SYMMETRICAL
EXP	EXPOSED	TAN	TANGENT
ID	INSIDE DIAMETER	TYP	TYPICAL
IR	INSIDE RADIUS		

RELIABLE PRODUCTS
P.O. BOX 580, 1300 ENTERPRISE RD
GENEVA, ALABAMA 36340-0580
PH: (334) 684-3621 FAX: (334) 684-3680

AREA	EST. PER.	EST. WT/FT.
-	-	-
ALLOY & TEMPER	UNSPEC. RADII	UNSPEC. WALL
-	-	-

DWN:	JTK	CHK:		APPV:	
DATE:	3/6/98	DATE:		DATE:	

PART DESC.
6375DC LOUVER
DETAILS AND NOTES

SHEET 7 OF 9

SCALE: NTS | ECN: - | DATE:

DWG No. 60-022117-07D | REV.

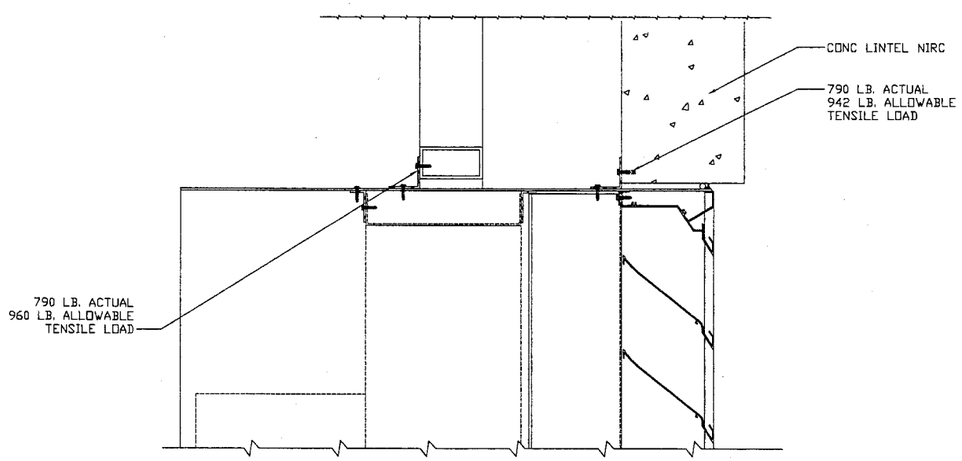

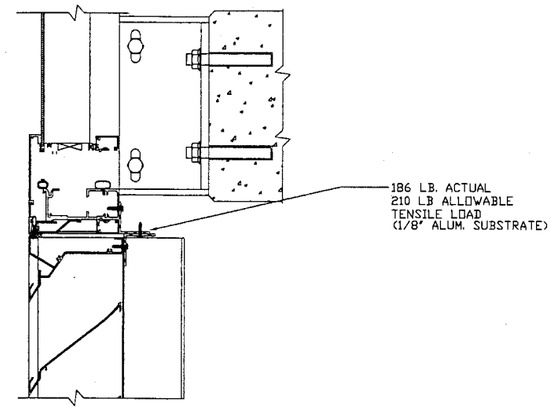

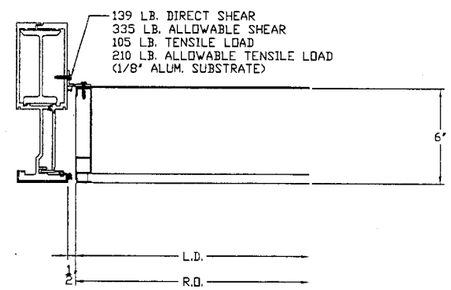

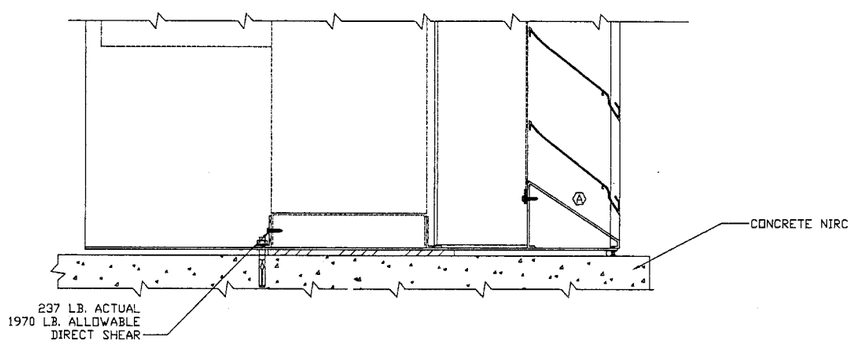

SLEEVED LOUVER DETAILS (JAMB SIM) (138 PSF) REF DET 12 & 14/04D

SCALE: 3" = 1'-0"

@ ASSEMBLY E

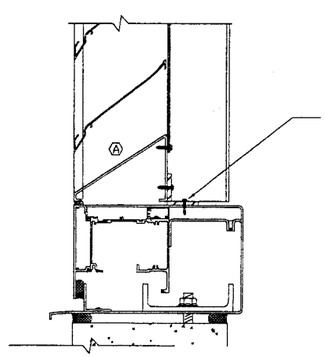

ALLOWABLE TENSION/SHEAR VALUES FOR THE FASTENERS IN 1/8" ALUMINUM ARE PER "HILTI PRODUCT TECHNICAL GUIDE"

12/21/2008

LOUVER DETAILS (138PSF) REF DET 15, 16 &17/05D

SCALE: 3" = 1'-0"

@ ASSEMBLY D

FOR OFFICE USE ONLY

Approved as complying with the Florida Building Code
Date 01/28/2009
NOA# 08-1112.12
Miami Dade Product Control
Division
By

ENGINEER OF RECORD:
DANIEL J. RAU

ENGINEERING DISCIPLINE:
CIVIL ENGINEER

REGISTRATION #:
STATE OF FLORIDA #63636

REV.	CHANGE SILL TO 70-021130-00B	4/14/08	RFM	DJR	DJR
A		DATE	RE'D BY	CHK'D BY	APP'D BY

TOLERANCES UNLESS SPECIFIED OTHERWISE
3 PLACE .XXX ±.010
2 PLACE .XX ±.020
ANGLE DIMENSIONS ± 2°
USE W1Q-007 & 008

NOTE:
1) ALL DIMENSIONS ARE GIVEN IN INCHES.
2) ALL EXPOSED SURFACES MUST BE FREE OF DIE LINES.
3) ALUMINUM ASSOCIATION TOLERANCES APPLY UNLESS OTHERWISE SPECIFIED.
4) ** EXTRUDER SPECIFIC ID MARK: .008R x .008DP

THIS INFORMATION DISCLOSED HEREIN WAS ORIGINATED BY AND IS THE PROPERTY OF RELIABLE PRODUCTS, AND EXCEPT FOR USES EXPRESSLY GRANTED TO THE UNITED STATES GOVERNMENT, RELIABLE PRODUCTS RESERVES ALL PATENT, PROPRIETARY, DESIGN, USE, SALE, MANUFACTURING AND REPRODUCTION RIGHTS THERETO. THIS DOES NOT APPLY TO ANY VENDOR PARTS.

CTR	CENTER	DC	ON CENTER
CL	CENTER LINE	OD	OUTSIDE DIAMETER
C-C	CENTER TO CENTER	OR	OUTSIDE RADIUS
CHAM	CHAMFER	PI	POINT OF INTERSECTION
DAT	DATUM	R	FULL RADIUS
DET	DETAIL	REF	REFERENCE
E-E	END TO END	SYM	SYMMETRICAL
EXP	EXPOSED	TAN	TANGENT
ID	INSIDE DIAMETER	TYP	TYPICAL
IR	INSIDE RADIUS		

RELIABLE PRODUCTS
P.O. BOX 580, 1300 ENTERPRISE RD
GENEVA, ALABAMA 36340-0580
PH: (334) 684-3621 FAX: (334) 684-3680

AREA	EST. PER.	EST. WT/FT.
-	-	-
ALLOY & TEMPER	UNSPEC. RADII	UNSPEC. WALL
-	-	

DWN:	REB	CHK:		APPV:	
DATE:	04/23/98	DATE:		DATE:	

PART DESC.
6375DC LOUVER
DETAILS AND NOTES

SHEET 8 OF 9

SCALE: NTS | ECN: - | DATE:

DWG No. 60-022117-08D | REV.

DAMPER SCHEDULE										LOUVER (NOTE #5)
QTY	A	B	BLD ACT	X	TAG NUMBER	ARRANGEMENT	REQ'D TORQUE PER SECTION	BELIMO ACT. PER SECT.	LOUVER MATCH TAG	SLEEVE I.D. SIZE
2	151 11/16	91 3/4	OB	20 9/32	AHU-28 MAXIMUM OA INTAKE	6 X 1	257 IN/LBS	GM24	L4/M05	156 X 96
1	92	113 1/2	OB	18 1/2	MAU'S INTAKE	4 X 2	142 IN/LBS	GM24	L1/144	96 1/4 X 117 3/4

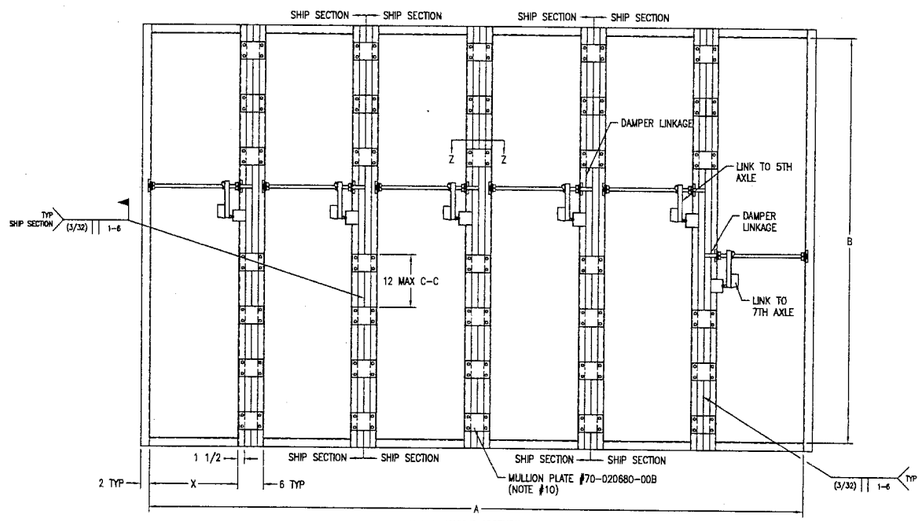

6 X 1 DAMPER ASSEMBLY

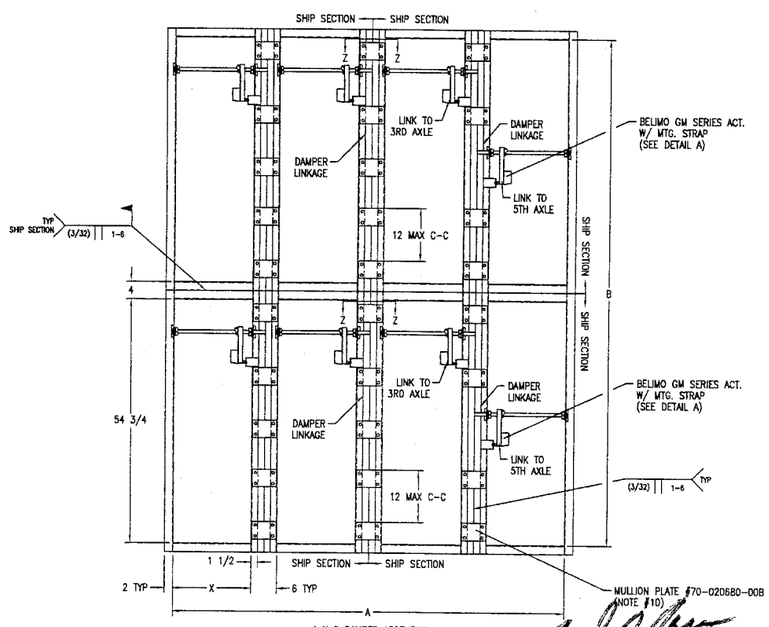

4 X 2 DAMPER ASSEMBLY

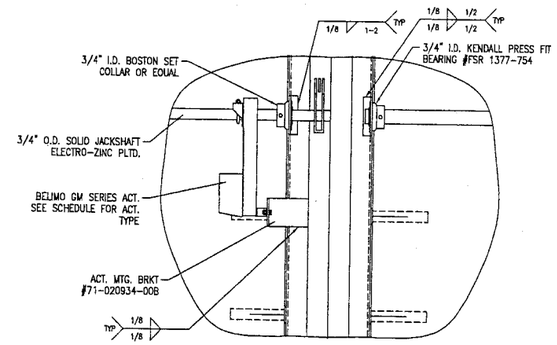

DETAIL A

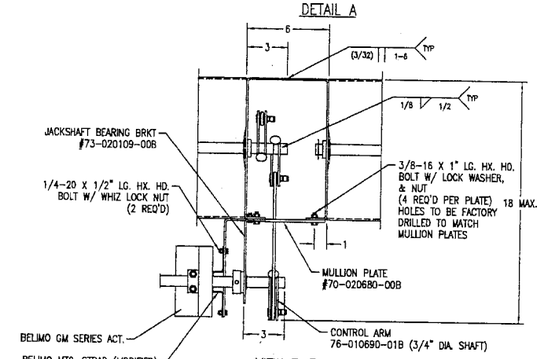

VIEW Z-Z
(SHOWS LINKAGE REQ'D TO OPERATE EACH SECTION NOT SHOWN IN FACE VIEW)

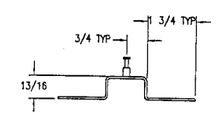

DETAIL B
MODIFY BELIMO MTG. STRAP AS SHOWN

NOTES:
1. SEE SPEC. SHEET FOR DAMPER CONSTRUCTION DETAILS & DIMENSIONS. GALVANIZED FRAME, ALUM. BLADE & PLTD STEEL AXLES.
2. DELETED
3. EACH DAMPER SECTION TO OPERATE INDEPENDENT OF EACH OTHER.
4. TORQUES BASED ON 5" W.G. @ 530 FPM.
5. ALL DAMPER MUST BE INSTALLED IN SLEEVE IN FIELD AS SHOWN IN DWG. NO. 60-021562-02D & 60-021562-030.
6. SEE SCHEDULE FOR TYPE OF ACTUATOR TO MOUNT PER DAMPER.
7. BLADE WIDTH 24" MAX. BASED ON LOAD OF 168 PSF WIND LOAD (32.3" W.G.).
8. LINKAGE NOT TO EXTEND PAST DAMPERS OUTSIDE FLANGES. JACKSHAFT MAY BE MOVED (1) AXLE LOWER TO PREVENT THIS.
9. DELETED
10. SPACE MULLION PLATES ON 12" C-C MAX IN DAMPERS 'B' DIM., STRADDLING ALL MOUNTING BRACKETS.
11. ALL DAMPERS TO BE PROVIDED W/ STN. STL. JAMB SEALS 80-012019-00B & SILICONE BLADE SEALS 80-008170-01A.

12/21/2008

FOR OFFICE USE ONLY

Approved as complying with the Florida Building Code
Date 01/28/2009
NOA# 08-1110.12
Miami Dade Product Control Division
By

ENGINEER OF RECORD:
DANIEL J. RAU.

ENGINEERING DISCIPLINE:
CIVIL ENGINEER

REGISTRATION #:
STATE OF FLORIDA #63636

REV.	DESCRIPTION	DATE	REV'D BY	CHK'D BY	APP'D BY
A	CHANGED ENGINEER OF RECORD	4/21/08	DWS	DJR	DJR

TOLERANCES UNLESS SPECIFIED OTHERWISE
3 PLACE .XXX ±.010
2 PLACE .XX ±.020
ANGLE DIMENSIONS ± 2°
USE WIQ-007 & 008

NOTE:
1) ALL DIMENSIONS ARE GIVEN IN INCHES.
2) ALL EXPOSED SURFACES MUST BE FREE OF DIE LINES.
3) ALUMINUM ASSOCIATION TOLERANCES APPLY UNLESS OTHERWISE SPECIFIED.
4) ** EXTRUDER SPECIFIC ID MARK: .008R x .008DP

THIS INFORMATION DISCLOSED HEREIN WAS ORIGINATED BY AND IS THE PROPERTY OF RELIABLE PRODUCTS, AND EXCEPT FOR USES EXPRESSLY GRANTED TO THE UNITED STATES GOVERNMENT, RELIABLE PRODUCTS RESERVES ALL PATENT, PROPRIETARY, DESIGN, USE, SALE, MANUFACTURING AND REPRODUCTION RIGHTS THERETO. THIS DOCS NOT APPLY TO ANY VENDOR PARTS.

CTR	CENTER	OC	ON CENTER
CL	CENTER LINE	OD	OUTSIDE DIAMETER
C-C	CENTER TO CENTER	OR	OUTSIDE RADIUS
CHAM	CHAMFER	PI	POINT OF INTERSECTION
DAT	DATUM	R	FULL RADIUS
DET	DETAIL	REF	REFERENCE
E-E	END TO END	SYM	SYMMETRICAL
EXP	EXPOSED	TAN	TANGENT
ID	INSIDE DIAMETER	TYP	TYPICAL
IR	INSIDE RADIUS		

RELIABLE PRODUCTS
P.O. BOX 580, 1300 ENTERPRISE RD
GENEVA, ALABAMA 36340-0580
PH: (334) 684-3621 FAX: (334) 684-3680

AREA	EST. PER.	EST. WT/FT.
–	–	–
ALLOY & TEMPER	UNSPEC. RADII	UNSPEC. WALL
–	–	

DWN:	REB	CHK:		APPV:	
DATE:	04/23/98	DATE:		DATE:	

PART DESC.
CD-102
DAMPER ASSEMBLY
SHEET 9 OF 9

SCALE: NTS | ECN: – | DATE:

DWG No. 60-022117-09D | REV.