MIAMI-DADE COUNTY
BUILDING CODE COMPLIANCE OFFICE (BCCO)
PRODUCT CONTROL DIVISION

MIAMI-DADE COUNTY, FLORIDA
METRO-DADE FLAGLER BUILDING

140 WEST FLAGLER STREET, SUITE 1603
MIAMI, FLORIDA 33130-1563
(305) 375-2901 FAX (305) 375-2908
www.buildingcodeonline.com

NOTICE OF ACCEPTANCE (NOA)

Built Right Construction, Inc.
1315 53rd Street, Suite 6
West Palm Beach, FL. 33407

SCOPE:
This NOA is being issued under the applicable rules and regulations governing the use of construction materials. The documentation submitted has been reviewed by Miami-Dade County Product Control Division and accepted by the Board of Rules and Appeals (BORA) to be used in Miami Dade County and other areas where allowed by the Authority Having Jurisdiction (AHJ).

This NOA shall not be valid after the expiration date stated below. The Miami-Dade County Product Control Division (In Miami Dade County) and/or the AHJ (in areas other than Miami Dade County) reserve the right to have this product or material tested for quality assurance purposes. If this product or material fails to perform in the accepted manner, the manufacturer will incur the expense of such testing and the AHJ may immediately revoke, modify, or suspend the use of such product or material within their jurisdiction. BORA reserves the right to revoke this acceptance, if it is determined by Miami-Dade County Product Control Division that this product or material fails to meet the requirements of the applicable building code.

This product is approved as described herein, and has been designed to comply with the Florida Building Code and the High Velocity Hurricane Zone of the Florida Building Code.

DESCRIPTION: Englert Series 1300 Aluminum Metal Panel

LABELING: Each unit shall bear a permanent label with the manufacturer's name or logo, city, state and the following statement: "Miami-Dade County Product Control Approved", unless otherwise noted herein.

RENEWAL of this NOA shall be considered after a renewal application has been filed and there has been no change in the applicable building code negatively affecting the performance of this product.

TERMINATION of this NOA will occur after the expiration date or if there has been a revision or change in the materials, use, and/or manufacture of the product or process. Misuse of this NOA as an endorsement of any product, for sales, advertising or any other purposes shall automatically terminate this NOA. Failure to comply with any section of this NOA shall be cause for termination and removal of NOA.

ADVERTISEMENT: The NOA number preceded by the words Miami-Dade County, Florida, and followed by the expiration date may be displayed in advertising literature. If any portion of the NOA is displayed, then it shall be done in its entirety.

INSPECTION: A copy of this entire NOA shall be provided to the user by the manufacturer or its distributors and shall be available for inspection at the job site at the request of the Building Official.

This NOA consists of pages 1 through 5.
The submitted documentation was reviewed by Alex Tigera.

MIAMI-DADE COUNTY APPROVED

ROOFING ASSEMBLY APPROVAL

Category:	Roofing
Sub-Category:	Metal, Panels (Non-Structural)
Material:	Aluminum
Deck Type:	Wood
Maximum Design Pressure	See Table A Below

TRADE NAMES OF PRODUCTS MANUFACTURED OR LABELED BY APPLICANT:

Product	Dimensions	Test Specifications	Product Description
Series 1300	l = various w = 16" Thickness = 0.032"	TAS 110 TAS 125	Aluminum, preformed, standing seam, coated panels.
Series 1300 Clip	l = 6-¼" w = 1-½" h = 1-$^{11}/_{16}$" Thickness Min. = 0.024"	TAS 114	Corrosion resistant, formed, steel clips for metal panel installation.
Trim Pieces	l = varies w = varies Thickness = 0.04"	TAS 110	Standard flashing and trim pieces. Manufactured for each panel width.

TRADE NAMES OF PRODUCTS MANUFACTURED BY OTHERS:

Product	Dimensions	Product Description	Manufacturer
Fire Barrier Board ("Dens Deck")	min. ¼" thick	Fire barrier for Class 'A' fire rating.	Georgia-Pacific with current PCA
Fasteners (Panel Clips)	min. #10 coarse thread wood screw.	Corrosion resistant, pancake head, self-drilling, self-threading screws	generic

EVIDENCE SUBMITTED

Test Agency	Test Identifier	Test Name/Report	Date
Architectural Testing, Inc.	01-32797.01 01-46070.02	TAS 100 TAS 125	11/05/08 12/03/03
Hurricane Test Laboratory, Inc.	0155 0404-04	TAS 125	5/21/04
BASF		ASTM G23 ASTM B117	11/15/04

APPROVED ASSEMBLY:

SYSTEM A-1:	Series 1300 Metal Roof Panels
Deck Type:	Wood, Non-insulated
Deck Description:	New Construction or Re-roof $^{19}/_{32}$" or greater plywood or wood plank.
Slope Range:	2":12" or greater
Maximum Uplift Pressure:	**See Table A Below**

Deck Attachment: Deck shall be attached in accordance with applicable Building Code, but in no case shall it be less than 8d x 2-1/2" galvanized ring shank roofing nails spaced 6" o.c. at roof perimeter and field. In reroofing, where the deck is less than $^{19}/_{32}$" thick (Minimum $^{15}/_{32}$") the above attachment method must be in addition to existing attachment.

Underlayment: Minimum underlayment shall be an ASTM D 226 Type II installed with a minimum 4" side-lap and 6" end-laps. Underlayment shall be fastened with corrosion resistant 32 gauge tin-caps and 12 gauge 1-¼" annular galvanized ring-shank roofing nails, spaced 6" o.c. at all laps and two staggered rows 12" o.c. in the field of the roll. Or, any approved underlayment having a current NOA.

Fire Barrier Board: Any approved fire barrier having a current NOA. Or for class A or B fire rating, install minimum ¼" thick Georgia Pacific "Dens Deck" (with current NOA) or minimum 4mm thick of Tritex, RockRoof (with current NOA) or $^{5}/_{8}$" water resistant type X gypsum sheathing with treated core and facer.

Valleys: Valley construction shall be in compliance with Roofing Application Standard RAS 133 and with Englert's current published installation instructions.

Metal Panels and Accessories: Install the "Series 1300 Panel" and accessories in compliance with Englert's current, published installation instructions and details. Flashing, penetrations, valley construction and other details shall be constructed in compliance with the minimum requirements provided in Roofing Application Standards RAS 133.

1. Each roof panel is attached to the plywood substrate along it's male rib using the approved clips (6-¼" long x 1-½ " wide x 1-$^{11}/_{16}$" tall) located 3" from each panel end and at a spacing as listed in **Table A** below. Each clip is attached to substrate with four (4) corrosion resistant #10 self tapping pan head screws of sufficient length to penetrate through the sheathing a minimum of 3/16".
2. Attach adjacent panel by placing the female rib over the male rib and clip. Standing seams shall be mechanically seamed to a full 180 degree seam, (double lock)

TABLE A
MAXIMUM DESIGN PRESSURES

Roof Areas	**Field**	**Perimeter and Corner[1]**
Maximum Design Pressures	-55psf	-123.5psf
Maximum Clip Spacing	24" o.c.	8" o.c.

1. Extrapolation shall not be allowed

SYSTEM LIMITATIONS

1. The maximum designed pressure listed herein shall be applicable to all roof pressure zones (i.e. field, perimeters, and corners). Neither rational analysis, nor extrapolation shall be permitted for enhanced fastening at enhanced pressure zones (i.e. perimeters, extended corners and corners).
2. Panels shall be roll formed in continuous lengths from eave to ridge. Maximum lengths shall be as described in Miami-Dade County Roofing Application Protocol RAS 133.
3. All panels shall be permanently labeled with the manufacturer's name and/or logo, and the following statement: "Miami-Dade County Product Control Approved. All clips shall be permanently labeled Englert, and/or logo, and/or model.
4. All products listed herein shall have a quality assurance audit in accordance with the Florida Building Code and Rule 9B-72 of the Florida Administrative Code.
5. Panels may be jobsite roll formed with machine model **#10031106** from Englert Inc.

PROFILE DRAWINGS

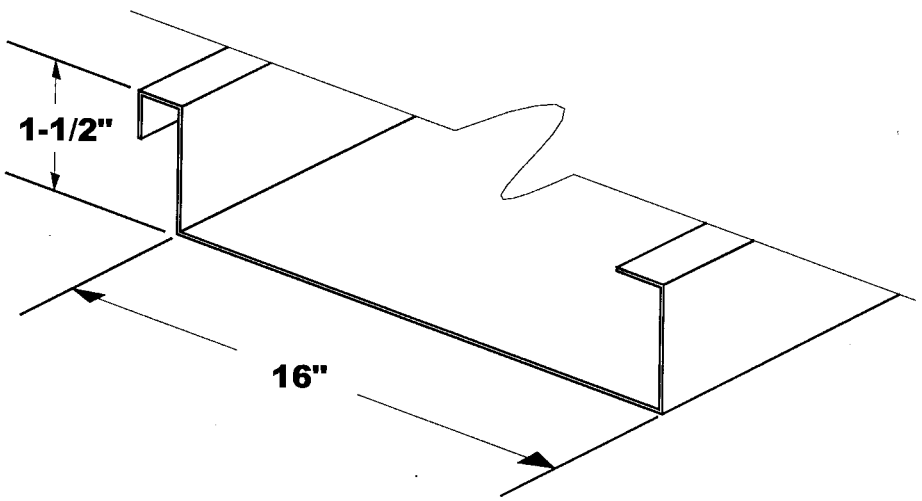

SERIES 1300 METAL PANEL

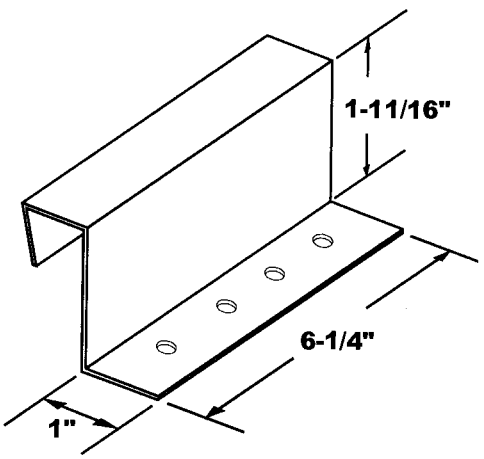

PANEL CLIP

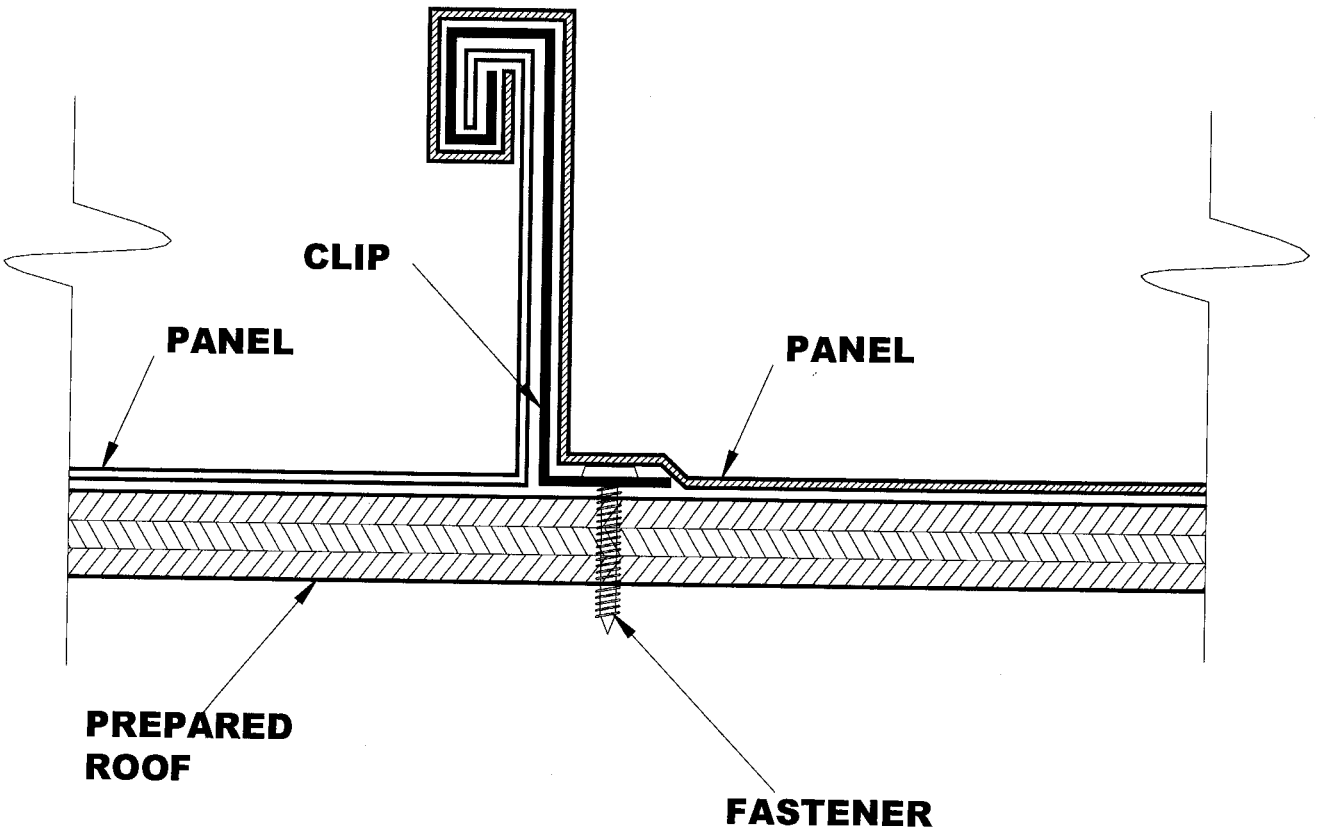

SERIES 1300 PANEL WITH CLIP AND FASTENER
AFTER SEAMING

END OF THIS ACCEPTANCE