MIAMI-DADE COUNTY
BUILDING CODE COMPLIANCE OFFICE (BCCO)
PRODUCT CONTROL DIVISION

MIAMI-DADE COUNTY, FLORIDA
METRO-DADE FLAGLER BUILDING
140 WEST FLAGLER STREET, SUITE 1603
MIAMI, FLORIDA 33130-1563
(305) 375-2901 FAX (305) 372-6339
www.miamidade.gov/buildingcode

NOTICE OF ACCEPTANCE (NOA)

Arch Aluminum & Glass Company
10200 NW 67th Street
Tamarac, FL 33321.

SCOPE:

This NOA is being issued under the applicable rules and regulations governing the use of construction materials. The documentation submitted has been reviewed by Miami-Dade County Product Control Division and accepted by the Board of Rules and Appeals (BORA) to be used in Miami Dade County and other areas where allowed by the Authority Having Jurisdiction (AHJ).

This NOA shall not be valid after the expiration date stated below. The Miami-Dade County Product Control Division (In Miami Dade County) and/or the AHJ (in areas other than Miami Dade County) reserve the right to have this product or material tested for quality assurance purposes. If this product or material fails to perform in the accepted manner, the manufacturer will incur the expense of such testing and the AHJ may immediately revoke, modify, or suspend the use of such product or material within their jurisdiction. BORA reserves the right to revoke this acceptance, if it is determined by Miami-Dade County Product Control Division that this product or material fails to meet the requirements of the applicable building code. This product is approved as described herein, and has been designed to comply with the Florida Building Code, including the High Velocity Hurricane Zone.

DESCRIPTION: Series "PBS-383" Aluminum Window Wall System – L.M.I.

APPROVAL DOCUMENT: Drawing No. **08-1114.05**, titled "PBS-383 Window Wall", Sheets 1 through 11 of 11, dated 04/15/09, prepared by manufacturer, signed and sealed C. W. Stater, P.E., bearing the Miami-Dade County Product Control Approval stamp with the Notice of Acceptance number and approval date by the Miami-Dade County Product Control Division.

MISSILE IMPACT RATING: Large and Small Missile Impact Resistant

LABELING: Each unit shall bear a permanent label with the manufacturer's name or logo, city, state and following statement: "Miami-Dade County Product Control Approved", unless otherwise noted herein.

RENEWAL of this NOA shall be considered after a renewal application has been filed and there has been no change in the applicable building code negatively affecting the performance of this product.

TERMINATION of this NOA will occur after the expiration date or if there has been a revision or change in the materials, use, and/or manufacture of the product or process. Misuse of this NOA as an endorsement of any product, for sales, advertising or any other purposes shall automatically terminate this NOA. Failure to comply with any section of this NOA shall be cause for termination and removal of NOA.

ADVERTISEMENT: The NOA number preceded by the words Miami-Dade County, Florida, and followed by the expiration date may be displayed in advertising literature. If any portion of the NOA is displayed, then it shall be done in its entirety.

INSPECTION: A copy of this entire NOA shall be provided to the user by the manufacturer or its distributors and shall be available for inspection at the job site at the request of the Building Official.

This NOA consists of this page 1 and evidence pages E-1 and E-2, as well as approval document mentioned above.

The submitted documentation was reviewed by **Manuel Perez, P.E.**

MIAMI-DADE COUNTY APPROVED

Arch Aluminum & Glass Company

NOTICE OF ACCEPTANCE: EVIDENCE SUBMITTED

A. DRAWINGS

1. Manufacturer's die drawings and sections.
2. Drawing No **08-1114.05**, Sheets 1 through 11 of 11, titled "PBS-383 Window Wall", dated 04/15/09, prepared by manufacturer, signed and sealed by C. W. Stater, P.E.

B. TESTS

1. Test reports on: 1) Air Infiltration Test, per FBC, TAS 202-94
   2) Uniform Static Air Pressure Test, Loading per FBC TAS 202-94
   3) Water Resistance Test, per FBC, TAS 202-94
   4) Large Missile Impact Test per FBC, TAS 201-94
   5) Cyclic Wind Pressure Loading per FBC, TAS 203-94

   along with marked-up drawings and installation diagram of series PBS-383 aluminum storefront system, spaced at 48" o.c., prepared by Fenestration Testing Laboratory, Inc., Test Report No. **FTL-5580**, dated 04/09/08, signed and sealed by Carlos S. Rionda, P.E.
2. Test reports on: 1) Air Infiltration Test, per FBC, TAS 202-94
   + 2) Uniform Static Air Pressure Test, Loading per FBC TAS 202-94
   3) Water Resistance Test, per FBC, TAS 202-94
   4) Large Missile Impact Test per FBC, TAS 201-94
   5) Cyclic Wind Pressure Loading per FBC, TAS 203-94

   along with marked-up drawings and installation diagram of series PBS-383 aluminum storefront system, spaced at 36" o.c., prepared by Fenestration Testing Laboratory, Inc., Test Report No. **FTL-5581**, dated 05/10/08, signed and sealed by Carlos S. Rionda, P.E.
3. Test reports on: 1) Air Infiltration Test, per FBC, TAS 202-94
   2) Uniform Static Air Pressure Test, Loading per FBC TAS 202-94
   3) Water Resistance Test, per FBC, TAS 202-94
   4) Large Missile Impact Test per FBC, TAS 201-94
   5) Cyclic Wind Pressure Loading per FBC, TAS 203-94

   along with marked-up drawings and installation diagram of series PBS-383 aluminum storefront system, w/pair of doors and 48" o.c. sidelites, prepared by Fenestration Testing Laboratory, Inc., Test Report No. **FTL-5583**, dated 04/07/08, signed and sealed by Carlos S. Rionda, P.E.

C. CALCULATIONS

1. Anchor verification calculations and structural analysis, complying with FBC-2007, prepared by manufacturer, dated 04/03/09 revised on 04/15/09, signed and sealed by C. W. Stater, P.E.

   Complies with ASTM E1300-04

Manuel Perez

Manuel Perez, P.E.
Product Control Examiner
NOA No. 08-1114.05
Expiration Date: July 29, 2014
Approval Date: July 29, 2009

NOTICE OF ACCEPTANCE: EVIDENCE SUBMITTED

D. QUALITY ASSURANCE

1. Miami Dade Building Code Compliance Office (BCCO).

E. MATERIAL CERTIFICATIONS

1. Notice of Acceptance No. **09-0312.03** issued to E.I. DuPont DeNemours & Co., Inc. for their "**DuPont Sentry Glass® Interlayer**" dated 05/13/09, expiring on 01/14/12.
2. Notice of Acceptance No. **06-0216.06** issued to Solutia Inc. for their "**Saflex IIIG Clear or colored interlayer**" dated 05/04/06, expiring on 05/21/11.
3. Notice of Acceptance No. **08-0206.01** issued to Solutia Inc. for their **"Saflex HP Glass Interlayer"** dated 04/17/08, expiring on 04/17/13.

F. STATEMENTS

1. Statement letter of conformance, dated April 15, 2009, signed and sealed by Christopher W. Stater, P.E.
2. Statement letter of no financial interest, dated April 15, 2009, signed and sealed by Christopher W. Stater, P.E.
3. Proposal No. **07-2738** issued by BCCO, dated August 23, 2007, signed by Ishaq Chanda, P.E.

G. OTHERS

1. None.

Manuel Perez, P.E.
Product Control Examiner
NOA No. 08-1114.05
Expiration Date: July 29, 2014
Approval Date: July 29, 2009

Miami/Dade Product Approval Drawings for PBS-383 series Window Wall (L.M.I.)

Product Manufacturer: ARCH ALUMINUM & GLASS Co., Inc.
10200 N.W. 67th Street
Tamarac, Florida

Product Name: Series PBS-383 Aluminum Window Wall System

Approved Testing Entity: Fenestration Testing Laboratory
8148 N.W. 74th Avenue, Medley, FL 33166
www.ftl-inc.com
Lab Numbers: 5580, 5581, 5583
Report Dates: 04/09/2008, 05/10/2008, 04/07/2008

Maximum Allowed Wind Design Pressure: (+/-)62 psf, & (+/-)70 psf & (+/-)106 psf (see tables)
Shutters are NOT required for Building Elevation. (LARGE MISSILE IMPACT compliance)
Florida Building Code Test Protocols:
TAS-201 : LARGE MISSILE IMPACT * PASSED
TAS-202 : Air Infiltration @ 6.24 psf measured 0.14 cmf/sf
Water Infiltration @ 9.3 psf and no leakage
Structural Load ASTM E-330 Design @ 62 psf & 70 psf & 106 psf
Structural Design Load x 1.5 = 93 psf and 159 psf
TAS-203 : Cycle test @ 62 psf , 70 psf, 106 psf * PASSED

Checked for conformance with the Florida Building Code, Section 1626.2
Steel and Aluminum allowable stress per FBC 2007
Aluminum alloys and temper 6063-T6, Fy minimum = 25 ksi
Steel to be ASTM A36. Welding shall use E70XX electrodes.
Metal Curtain Wall Fasteners, AAMA TIR-A9-1991 into aluminum or steel, SAE Grade 5
Wood anchor capacity per NDS 2005, with load duration factor of Cd=1.6
Glazing System's Setting Blocks shall be at 1/8 points per AAMA.
Anchorage of substrate or loading not shown is NOT a part of this approval.

Installation Instructions reference: www.archaluminum.net
Aluminum shall NOT be in contact with wood, concrete, or steel.

Reference NOA No. 07-0727.02 for Small Missile Impact compliance.
Reference NOA No. 05-0829.08 for DOOR compliance.
Evaluation Report: Chris W. Stater, PE FL#38425

INSTRUCTIONS

1. Determine wind load design pressure using ASCE-7-05, Local code wind velocity (mph), Building height & Zone.
2. See Table 4 on sheet 4, for design capacity of Glass.
3. See Tables 1,2,3 on sheet 2 & 3 for design capacity of Mullions.
4. See Table 5 on sheet 7, for design capacity of Anchorage.
5. From steps 2,3,4 use lowest value for design capacity of wall system.

Glazing Material based on ASTM E-1300.04
Max Glazing Area & Interlayer type: Reference Table 5
- Maximum DLO size: width 46.5" (3'-10.5") height 115" (9'-7")
- Maximum module width 48 inches @ 70psf, 62psf with door
- Alternate module width: 36 inches (3'-0) @ 106 psf

Heat Strengthen Glass: ASTM C 1036 and ASTM C 1048.04 and ASTM 1376
Glass Interlayer:
Saflex HP Glass Interlayer@ 0.100" is Manufactured by SOLUTIA, INC.
Saflex IIIG Glass Interlayer@ 0.090" is Manufactured by SOLUTIA, INC.
DuPont SentryGlas Plus @ 0.090" Glass Interlayer is Manufactured by E.I.Dupont De Nemours & Co.,Inc.

Anchorage shall be as listed, and shown on Elevations and Details,
Anchor Bolts into Steel (minimum thickness 0.125 inch or gage no.10)
5/16" ASTM A-325, SAE Grade 5 bolt w/ minimum yield strength
Fy = 92,000 psi, reference TIR-A9-1991, reference sheet 8 & 9
Anchor Bolts into Wood: (Design of wood anchor bolts use 1.33 wind load factor with load duration factor of Cd = 1.6 was used)
5/16"Tapcon by ITW; NOA No: 07-0315.03
5/16"Tapcon by Elco; NOA No: 04-0721-01, reference sheet 8 & 9
Anchor Bolts into Concrete: reference sheet 8 & 9
Pressure Bar fastener "Dril-Flex" (by Elco) NO substitution allowed
Maximum Allowable Shim = 0.0" space under extruded aluminum anchors, (if shim space > 0"contact delegated licensed engineer)
Architect & Engineer of Record shall coordinate perimeter Joint size per FBC 2007 adopted standards and adopted codes.

* NOTES
INSPECTION (i.e. installation, edge distances, quality control, etc.), supporting structure analysis, field changes, air and water infiltration, window washing equipment, building creep, thermal and structural movement BY OTHERS. Inspection shall be the responsibility of the Architect, Engineer of Record, or building Inspector coordinated by the G.C. or Owner. Should field inspection show any discrepancies the delegated structural engineer shall be notified immediately.

Supporting substrate (BY OTHERS) needs to be capable of sustaining a wind load reaction @ ends of each vertical.
Final Coordination of shop drawings with field conditions by Others.
Responsible charge of Field Inspection with shop drawing and NOA submittal process by Others.

Approved as complying with the Florida Building Code
Date JULY 29, 2009
NOA# 08-1114.05
Miami Dade Product Control Division
By Manuel Perez

Dade County Product Approval

C. W. STATER, PE

4-15-2009

FLA PE # 38425

REV	BY	DATE	DESCRIPTION

Arch Aluminum & Glass Co., Inc.
Your TRUE Single Source®
10200 N.W. 67TH STREET
TAMARAC, FLORIDA 33321
Tel. (800) 432-8132
Fax. (954) 724-9293

C. W. Stater, PE
FL PE License#38425
10200 N.W. 67th Street
Tamarac, FL 33321
Phone: 800-432-8132
cstater@archaluminum.net

drawn by: CWS
date: Apr. 15, 2009
system name: PBS-383 WINDOW WALL
drawing no: 08-1114.05
Sheet 1 of 11

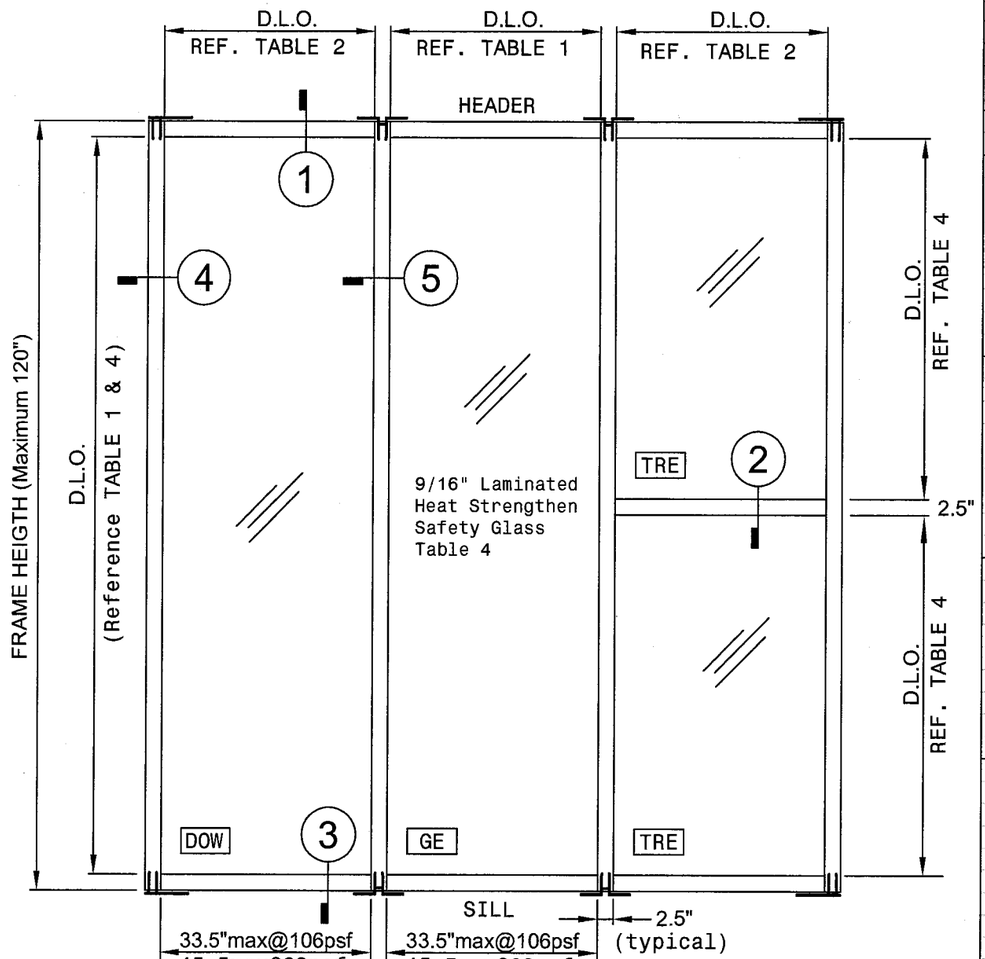

ELEVATION 1

TABLE 1. MULLN 38309 LOAD CAPACITY - PSF

MULLION LOAD CAPACITY			MULLION LOAD CAPACITY		
38309			38309		
Nominal	Dims.	PSF	Nominal	Dims.	PSF
D.L.O.	FRAME	EXT. (+)	D.L.O.	FRAME	EXT. (+)
WIDTH	HEIGHT	INT. (-)	WIDTH	HEIGHT	INT. (-)
12"	120"	106	12"	90"	106
18"	120"	106	18"	90"	106
24"	120"	106	24"	90"	106
30"	120"	106	30"	90"	106
33.5	120"	106	33.5	90"	106
33.6	120"	62	33.6	90"	62
36"	120"	62	36"	90"	62
42"	120"	62	42"	90"	62
45.5	120"	62	45.5	90"	62
12"	114"	106	12"	90"	106
18"	114"	106	18"	90"	106
24"	114"	106	24"	90"	106
30"	114"	106	30"	90"	106
33.5	114"	106	33.5	90"	106
33.6	114"	62	33.6	90"	62
36"	114"	62	36"	90"	62
42"	114"	62	42"	90"	62
45.5	114"	62	45.5	90"	62
12"	108"	106	12"	78"	106
18"	108"	106	18"	78"	106
24"	108"	106	24"	78"	106
30"	108"	106	30"	78"	106
33.5	108"	106	33.5	78"	106
33.6	108"	62	33.6	78"	62
36"	108"	62	36"	78"	62
42"	108"	62	42"	78"	62
45.5	108"	62	45.5	78"	62
12"	102"	106	12"	72"	106
18"	102"	106	18"	72"	106
24"	102"	106	24"	72"	106
30"	102"	106	30"	72"	106
33.5	102"	106	33.5	72"	106
33.6	102"	62	33.6	72"	62
36"	102"	62	36"	72"	62
42"	102"	62	42"	72"	62
45.5	102"	62	45.5	72"	62
12"	96"	106	12"	66"	106
18"	96"	106	18"	66"	106
24"	96"	106	24"	66"	106
30"	96"	106	30"	66"	106
33.5	96"	106	33.5	66"	106
33.6	96"	62	33.6	66"	62
36"	96"	62	36"	66"	62
42"	96"	62	42"	66"	62
45.5	96"	62	45.5	66"	62

TABLE 2. JAMB 38309 LOAD CAPACITY - PSF

JAMB LOAD CAPACITY			JAMB LOAD CAPACITY		
38309			38309		
Nominal	Dims.	PSF	Nominal	Dims.	PSF
D.L.O.	FRAME	EXT. (-)	D.L.O.	FRAME	EXT. (+)
WIDTH	HEIGHT	INT. (-)	WIDTH	HEIGHT	INT. (-)
12"	120"	106	12"	90"	106
18"	120"	106	18"	90"	106
24"	120"	106	24"	90"	106
30"	120"	106	30"	90"	106
33.5	120"	106	33.5	90"	106
33.6	120"	62	33.6	90"	62
36"	120"	62	36"	90"	62
42"	120"	62	42"	90"	62
45.5	120"	62	45.5	90"	62
12"	114"	106	12"	90"	106
18"	114"	106	18"	90"	106
24"	114"	106	24"	90"	106
30"	114"	106	30"	90"	106
33.5	114"	106	33.5	90"	106
33.6	114"	62	33.6	90"	62
36"	114"	62	36"	90"	62
42"	114"	62	42"	90"	62
45.5	114"	62	45.5	90"	62
12"	108"	106	12"	78"	106
18"	108"	106	18"	78"	106
24"	108"	106	24"	78"	106
30"	108"	106	30"	78"	106
33.5	108"	106	33.5	78"	106
33.6	108"	62	33.6	78"	62
36"	108"	62	36"	78"	62
42"	108"	62	42"	78"	62
45.5	108"	62	45.5	78"	62
12"	102"	106	12"	72"	106
18"	102"	106	18"	72"	106
24"	102"	106	24"	72"	106
30"	102"	106	30"	72"	106
33.5	102"	106	33.5	72"	106
33.6	102"	62	33.6	72"	62
36"	102"	62	36"	72"	62
42"	102"	62	42"	72"	62
45.5	102"	62	45.5	72"	62
12"	96"	106	12"	66"	106
18"	96"	106	18"	66"	106
24"	96"	106	24"	66"	106
30"	96"	106	30"	66"	106
33.5	96"	106	33.5	66"	106
33.6	96"	62	33.6	66"	62
36"	96"	62	36"	66"	62
42"	96"	62	42"	66"	62
45.5	96"	62	45.5	66"	62

DESIGN PRESSURE	REFERENCE SHEET / TABLE
GLASS TYPE SPECIFICATION	TYPE = G1, G2 & G3 REFERENCE B.O.M. SHEET 11
ANCHOR TYPE (TOP / BOTT)	TYPE-A, TYPE-B, TYPE-C REF. SHEETS 6,7,8,9,10
FOR	
SUPPORTING SUBSTRATE	WOOD PRESSURE TREATED SG=0.55
	STEEL ASTM A-36 tmin=0.125"
	CONCRETE F'c = 3000psi NWT
	GROUT FILLED MASONRY BLOCK ASTM C-90

Approved as complying with the Florida Building Code
Date JULY 29 2009
NOA# 08-1114.05
Miami-Dade Product Control Division
By Manuel Perez

Dade County
Product Approval

C. W. STATER, PE

4-15-09

FLA PE # 38425

REV	BY	DATE	DESCRIPTION

Arch Aluminum & Glass Co., Inc.
Your TRUE Single Source®
10200 N.W. 67TH STREET
TAMARAC, FLORIDA 33321
Tel. (800) 432-8132
Fax. (954) 724-9293

C. W. Stater, PE
FL PE License#38425
10200 N.W. 67th Street
Tamarac, FL 33321
Phone: 800-432-8132
cstater@archaluminum.net

drawn by: CWS

date: Apr. 15, 2009

system name: PBS-383 WINDOW WALL

drawing no: 08-1114.05

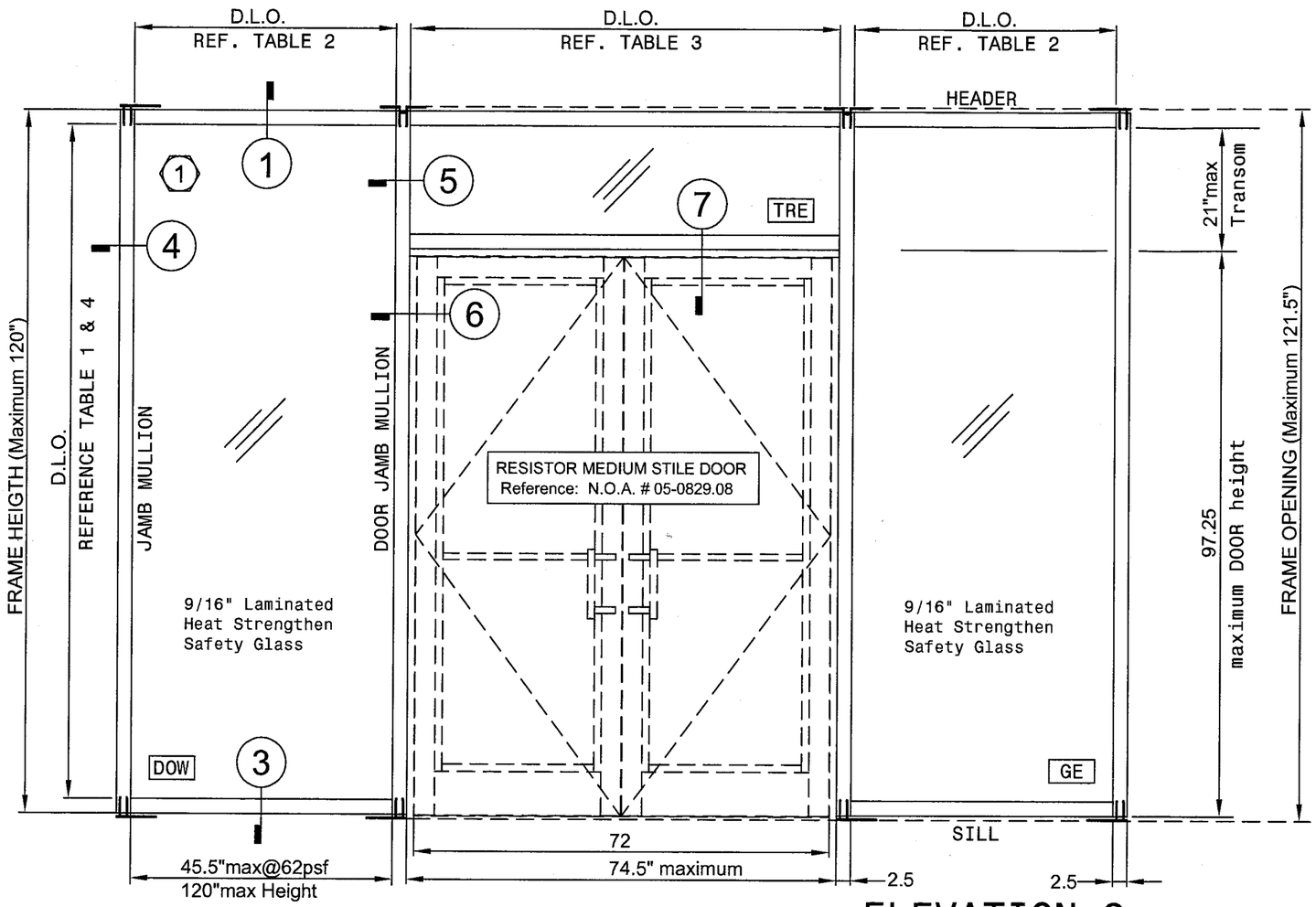

ELEVATION 2

TABLE 3. DOOR JAMB LOADING

		DOOR JAMB LOAD CAPACITY		
DOOR	38309			
Nominal	Nominal	Nominal	Dims.	PSF
MAX				
DOOR	38309	TRIB.	FRAME	EXT. (+)
CL-CL	CL-CL	WIDTH	HEIGHT	INT. (-)
74.5	12	43.25	120"	62
74.5	18	46.25	120"	62
74.5	24	49.25	120"	62
74.5	30	52.25	120"	62
74.5	33	53.75	120"	62
74.5	36	55.25	120"	62
74.5	42	58.25	120"	62
74.5	48	61.25	120"	62
74.5	12	43.25	114"	62
74.5	18	46.25	114"	62
74.5	24	49.25	114"	62
74.5	30	52.25	114"	62
74.5	33	53.75	114"	62
74.5	36	55.25	114"	62
74.5	42	58.25	114"	62
74.5	48	61.25	114"	62
74.5	12	43.25	108"	62
74.5	18	46.25	108"	62
74.5	24	49.25	108"	62
74.5	30	52.25	108"	62
74.5	33	53.75	108"	62
74.5	36	55.25	108"	62
74.5	42	58.25	108"	62
74.5	48	61.25	108"	62
74.5	12	43.25	102"	62
74.5	18	46.25	102"	62
74.5	24	49.25	102"	62
74.5	30	52.25	102"	62
74.5	33	53.75	102"	62
74.5	36	55.25	102"	62
74.5	42	58.25	102"	62
74.5	48	61.25	102"	62
74.5	12	43.25	96"	62
74.5	18	46.25	96"	62
74.5	24	49.25	96"	62
74.5	30	52.25	96"	62
74.5	33	53.75	96"	62
74.5	36	55.25	96"	62
74.5	42	58.25	96"	62
74.5	48	61.25	96"	62

DESIGN PRESSURE	REFERENCE: SHEET / TABLE
GLASS TYPE SPECIFICATION	TYPE = G1, G2 & G3 REFERENCE B.O.M. SHEET 11
ANCHOR TYPE (TOP / BOTT)	TYPE-A, TYPE-B, TYPE-C REF. SHEETS 6,7,8,9,10
FOR	
SUPPORTING SUBSTRATE	WOOD PRESSURE TREATED SG=0.55
	STEEL ASTM A-36 tmin=0.125"
	CONCRETE F'c = 3000psi NWT
	GROUT FILLED MASONRY BLOCK ASTM C-90

Approved as complying with the Florida Building Code
Date JULY 29, 2009
NOA# 08-1114.05
Miami-Dade Product Control Division
By Manuel Perez

Dade County
Product Approval

C. W. STATER, PE

4-15-09

FLA PE # 38425

REV	BY	DATE	DESCRIPTION

Arch Aluminum & Glass Co., Inc.
Your TRUE Single Source®
10200 N.W. 67TH STREET
TAMARAC, FLORIDA 33321
Tel. (800) 432-8132
Fax. (954) 724-9293

C. W. Stater, PE
FL PE License#38425
10200 N.W. 67th Street
Tamarac, FL 33321
Phone: 800-432-8132
cstater@archaluminum.net

drawn by: CWS

date: Apr. 15, 2009

system name: PBS-383 WINDOW WALL

drawing no: 08-1114.05

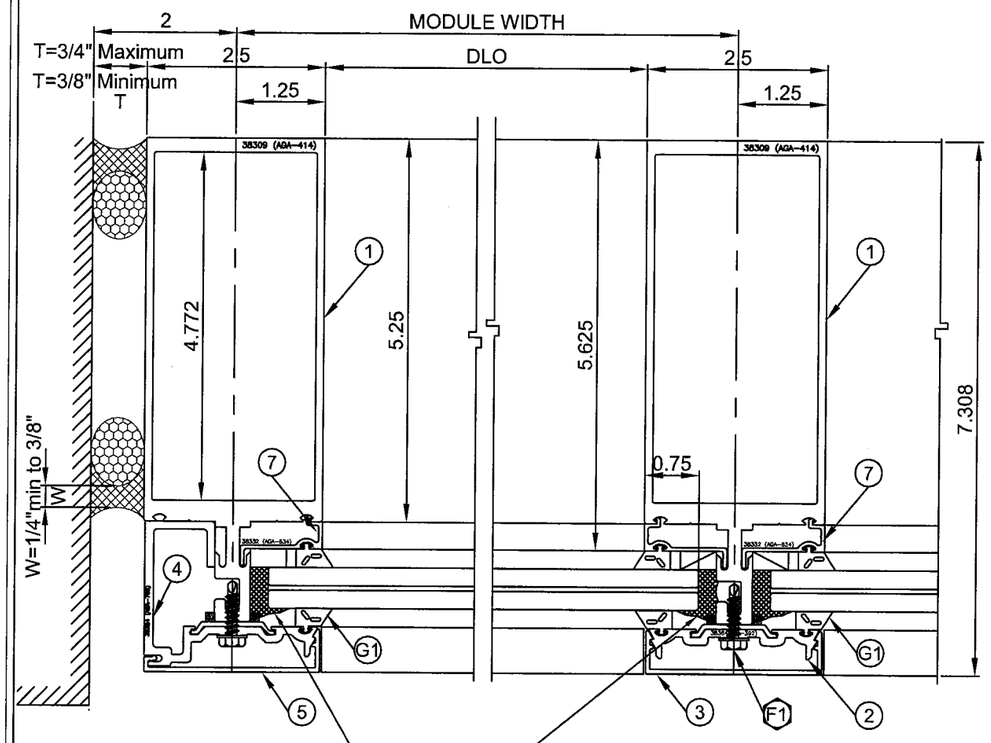

4 JAMB MULLION

5 INTERMMEDIATE MULLION

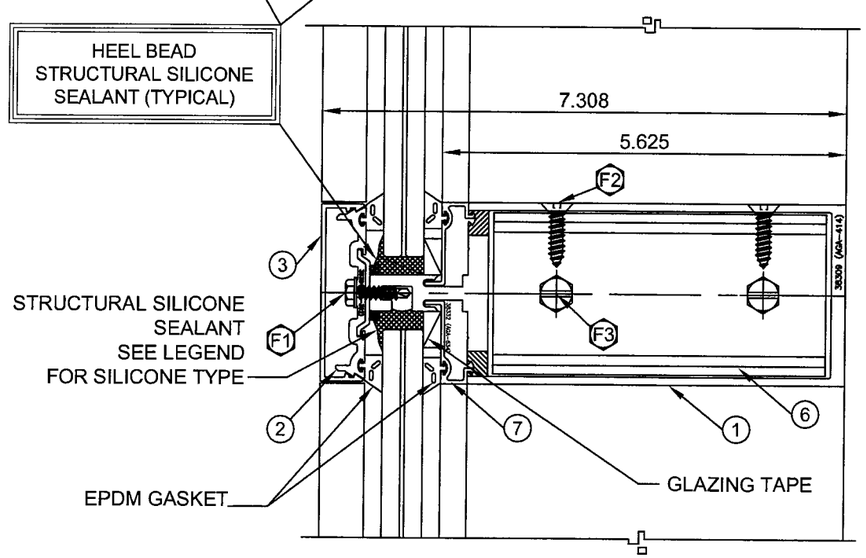

2 INTERMMEDIATE HORIZONTAL

TABLE 4. GLASS DESIGN LOAD CAPACITY - PSF

PBS-38309

GLAZING TYPE 1 - 0.090" Solutia Saflex IIIG

115	33.5	26.8	26.8	106psf
Nominal D.L.O. HEIGHT	Dims. D.L.O. WIDTH	Glass AREA	TESTED AREA	ALLOW D.Pres. Cyclic PSF
57.5	12	4.8 ft^2	26.8	106psf
57.5	18	7.2 ft^2	26.8	106psf
57.5	24	9.6 ft^2	26.8	106psf
57.5	30	12.0 ft^2	26.8	106psf
57.5	33.5	13.4 ft^2	26.8	106psf
114.97	33.51	26.8 ft^2	36.3	62psf
115	36	28.8 ft^2	36.3	62psf
115	38	30.3 ft^2	36.3	62psf
115	40	31.9 ft^2	36.3	62psf
115	43	34.3 ft^2	36.3	62psf
115	45.50	36.3 ft^2	36.3	62psf

PBS-38309

GLAZING TYPE 2 - 0.100" Solutia Saflex HP

115	33.5	26.8	26.8	106psf
Nominal D.L.O. HEIGHT	Dims. D.L.O. WIDTH	Glass AREA	TESTED AREA	ALLOW D.Pres. Cyclic PSF
115	12	9.6 ft^2	26.8	106psf
115	18	14.4 ft^2	26.8	106psf
115	24	19.2 ft^2	26.8	106psf
115	30	24.0 ft^2	26.8	106psf
115	33.5	26.8 ft^2	26.8	106psf
114.97	33.51	26.8 ft^2	36.3	62psf
108	35.67	26.8 ft^2	36.3	62psf
102	37.77	26.8 ft^2	36.3	62psf
96	40.13	26.8 ft^2	36.3	62psf
90	42.81	26.8 ft^2	36.3	62psf
84.67	45.50	26.8 ft^2	36.3	62psf

PBS-38309

GLAZING TYPE 3 - .090" Dupont SnetryGlas Plus

115	33.5	26.8	26.8	106psf
Nominal D.L.O. HEIGHT	Dims. D.L.O. WIDTH	Glass AREA	TESTED AREA	ALLOW D.Pres Cyclic PSF
115	12	9.6 ft^2	26.8	106psf
115	18	14.4 ft^2	26.8	106psf
115	24	19.2 ft^2	26.8	106psf
115	30	24.0 ft^2	26.8	106psf
115	33.5	26.8 ft^2	26.8	106psf
114.97	33.51	26.8 ft^2	36.3	62psf
108	35.67	26.8 ft^2	36.3	62psf
102	37.77	26.8 ft^2	36.3	62psf
96	40.13	26.8 ft^2	36.3	62psf
90	42.81	26.8 ft^2	36.3	62psf
84.67	45.50	26.8 ft^2	36.3	62psf

PBS-38309 WITH DOOR

GLAZING TYPE 1 - 0.090" Solutia Saflex IIIG

115	45.5	36.3	36.3	62psf
Nominal D.L.O. HEIGHT	Dims. D.L.O. WIDTH	Glass AREA	TESTED AREA	ALLOW D.Pres. Cyclic PSF
115	12	9.6 ft^2	36.3	62psf
115	24	19.2 ft^2	36.3	62psf
115	36	28.8 ft^2	36.3	62psf
115	45.5	36.3 ft^2	36.3	62psf

PBS-38309 WITH DOOR

GLAZING TYPE 2 - 0.100" Solutia Saflex HP

115	45.5	36.3	36.3	62psf
Nominal D.L.O. HEIGHT	Dims. D.L.O. WIDTH	Glass AREA	TESTED AREA	ALLOW D.Pres. Cyclic PSF
115	12	9.6 ft^2	36.3	62psf
115	24	19.2 ft^2	36.3	62psf
115	36	28.8 ft^2	36.3	62psf
115	45.5	36.3 ft^2	36.3	62psf

PBS-38309 WITH DOOR

GLAZING TYPE 3 - .090" Dupont SnetryGlas Plus

115	45.5	36.3	36.3	62psf
Nominal D.L.O. HEIGHT	Dims. D.L.O. WIDTH	Glass AREA	TESTED AREA	ALLOW D.Pres. Cyclic PSF
115	12	9.6 ft^2	36.3	62psf
115	24	19.2 ft^2	36.3	62psf
115	36	28.8 ft^2	36.3	62psf
115	45.5	36.3 ft^2	36.3	62psf

REFERENCE PAGE 11 FOR GLASS TYPE SPECIFICATION

STRUCTURAL SEALANT LEGEND	PERIMETER SEALANT LEGEND & SIZE W*
GE = GE UltraGlaze*SSG4000	GE = GE SilPruf LM SCS2700, where W=T/2
DOW = Dow Corning 995 S.S.G.S.	DOW = Dow Corning 790, where W=T/2
TRE = TREMCO Proglaze*SSG	TRE = TREMCO Dymonic FC, W=T & 3/4" max

*Perimeter sealants shall be capable of -50%, +100% movement at Jamb, Head & Sill gap can be designed by Engineer of Record based on manufacture's guidelines.

Approved as complying with the Florida Building Code
Date JULY 29, 2009
NOA# 08-1114.05
Miami-Dade Product Control Division
By Maxwell Perez

Dade County Product Approval

C. W. STATER, PE

4-15-09

FLA PE # 38425

REV	BY	DATE	DESCRIPTION

Arch Aluminum & Glass Co., Inc.
Your TRUE Single Source®
10200 N.W. 67TH STREET
TAMARAC, FLORIDA 33321
Tel. (800) 432-8132
Fax. (954) 724-9293

C. W. Stater, PE
FL PE License#38425
10200 N.W. 67th Street
Tamarac, FL 33321
Phone: 800-432-8132
cstater@archaluminum.net

drawn by: CWS

date: Apr. 15, 2009

system name: PBS-383 WINDOW WALL

drawing no: 08-1114.05

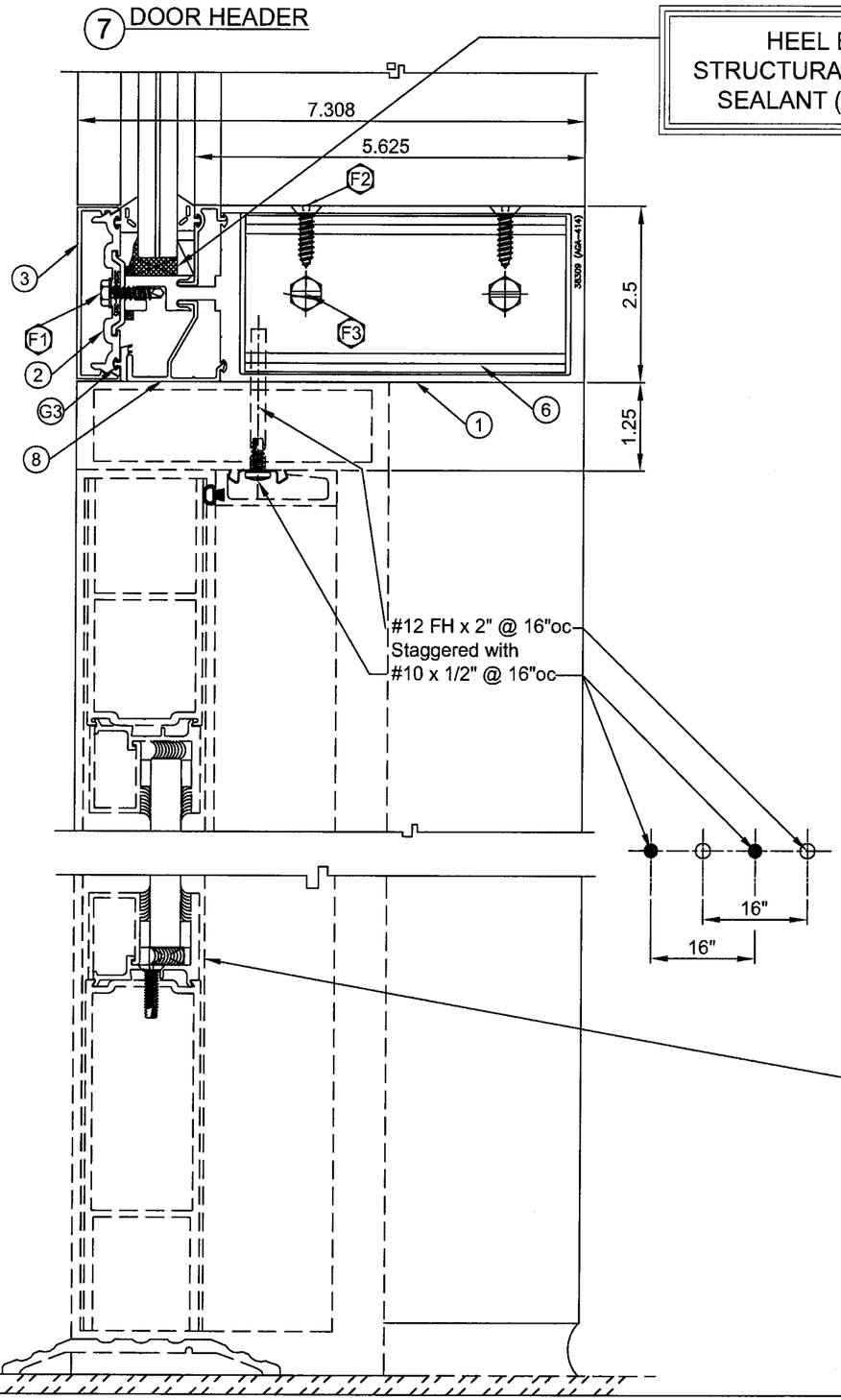

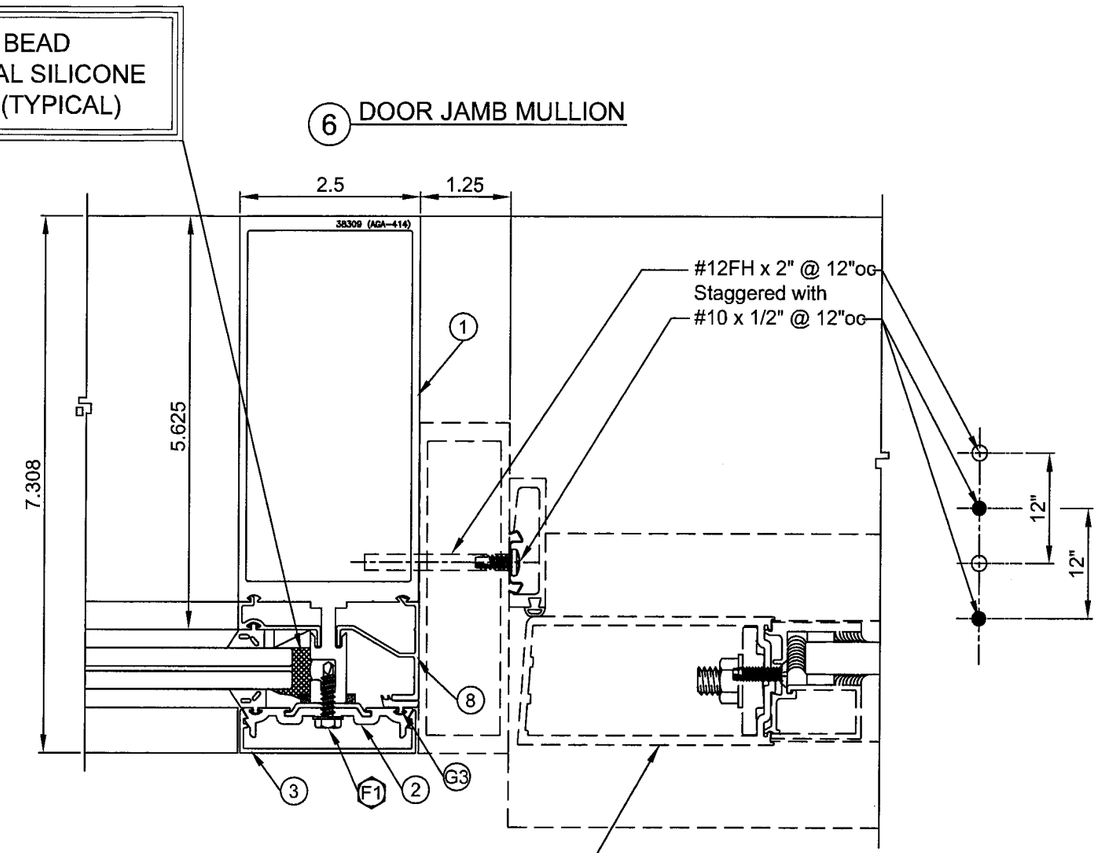

HEEL BEAD
STRUCTURAL SILICONE
SEALANT (TYPICAL)

RESISTOR MEDIUM STILE DOOR
N.O.A. # 05-0829.08
MIAMI-DADE APPROVED
L.M.I. DOOR

Approved as complying with the Florida Building Code
Date JULY 29, 2009
NOA# 08-1114.05
Miami-Dade Product Control Division
By Manuel Perez

Dade County
Product Approval

C. W. STATER, PE

4-15-09

FLA PE # 38425

REV	BY	DATE	DESCRIPTION

Arch Aluminum & Glass Co., Inc.
Your TRUE Single Source®
10200 N.W. 67TH STREET
TAMARAC, FLORIDA 33321
Tel. (800) 432-8132
Fax. (954) 724-9293

C. W. Stater, PE
FL PE License#38425
10200 N.W. 67th Street
Tamarac, FL 33321
Phone: 800-432-8132
cstater@archaluminum.net

drawn by: CWS

date: Apr. 15, 2009

system name: PBS-383 WINDOW WALL

drawing no: 08-1114.05

SUBSTRATE:
STEEL 1/8" thick Minimum
CONCRETE F'c = 3000 psi NWT
MASONRY ASTM C-90
PT WOOD SG=0.55

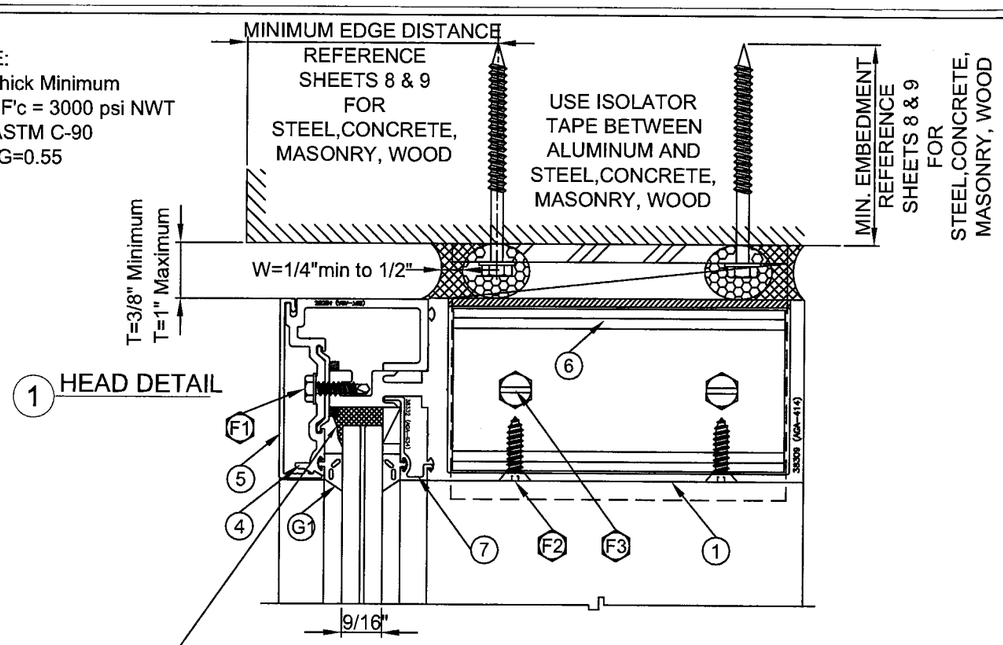

SEE TABLE 5, PAGE 6 FOR ANCHOR LOAD CAPACITY
SEE PAGE 8 & 9 FOR ANCHOR TYPE INFORMATON
REFERENCE PAGE 11 FOR GLASS TYPE SPECIFICATION

HEEL BEAD
STRUCTURAL SILICONE
SEALANT (TYPICAL)

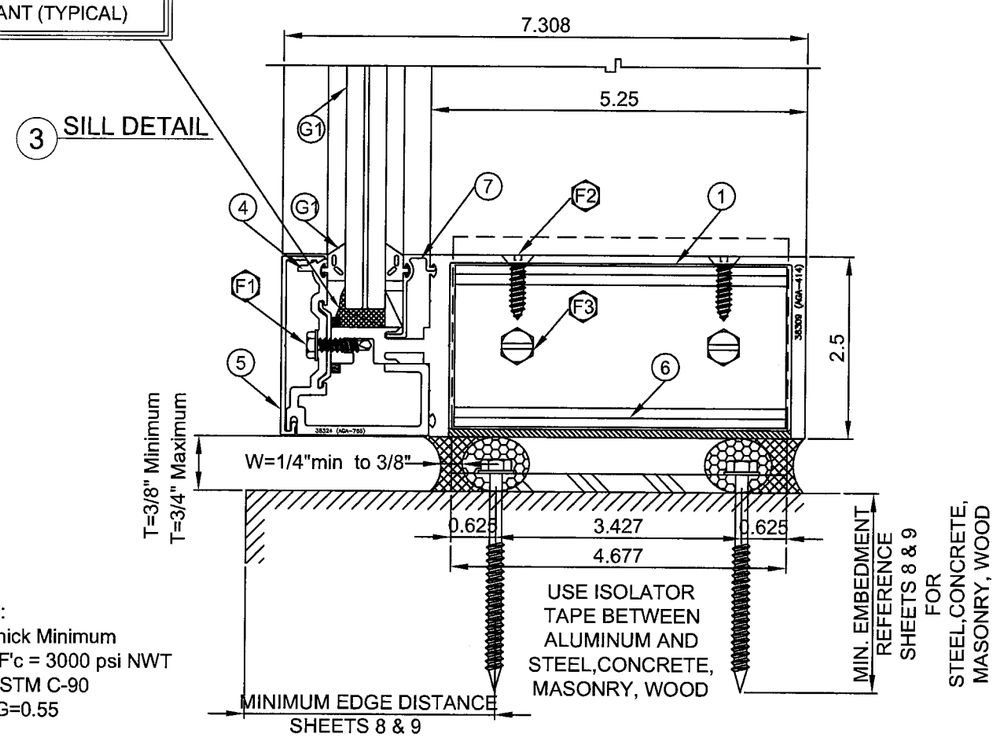

SUBSTRATE:
STEEL 1/8" thick Minimum
CONCRETE F'c = 3000 psi NWT
MASONRY ASTM C-90
PT WOOD SG=0.55

STRUCTURAL SEALANT LEGEND	PERIMETER SEALANT LEGEND & SIZE W*
GE = GE UltraGlaze*SSG4000	GE = GE SilPruf LM SCS2700, where W=T/2
DOW = Dow Corning 995 S.S.G.S.	DOW = Dow Corning 790, where W=T/2
TRE = TREMCO Proglaze*SSG	TRE = TREMCO Dymonic FC, W=T & 3/4"max

*Architect & Engineer of Record shall coordinate Head Joint size that accomodates supporting structure's deflection from uniformly distributed and concentrated live loads, long term creep, sway, thermal movement, and construction tolerance without failue of Joint sealant per FBC 2007 adopted standards and ASTM C-1472.

Perimeter sealants shall be capable of -50%, +100% movement at Jamb, Head & Sill gap can be designed by Engineer of Record based on manufacture's guidelines.

Approved as complying with the Florida Building Code
Date JULY 29 2009
NOA# 08-1114.05
Miami-Dade Product Control Division
By Manuel Perez

Dade County
Product Approval

C. W. STATER, PE

4-15-09

FLA PE # 38425

REV	BY	DATE	DESCRIPTION

Arch Aluminum & Glass Co., Inc.
Your TRUE Single Source®
10200 N.W. 67TH STREET
TAMARAC, FLORIDA 33321
Tel. (800) 432-8132
Fax. (954) 724-9293

C. W. Stater, PE
FL PE License#38425
10200 N.W. 67th Street
Tamarac, FL 33321
Phone: 800-432-8132
cstater@archaluminum.net

drawn by: CWS
date: Apr. 15, 2009
system name: PBS-383 WINDOW WALL
drawing no: 08-1114.05
Sheet 6 of 11

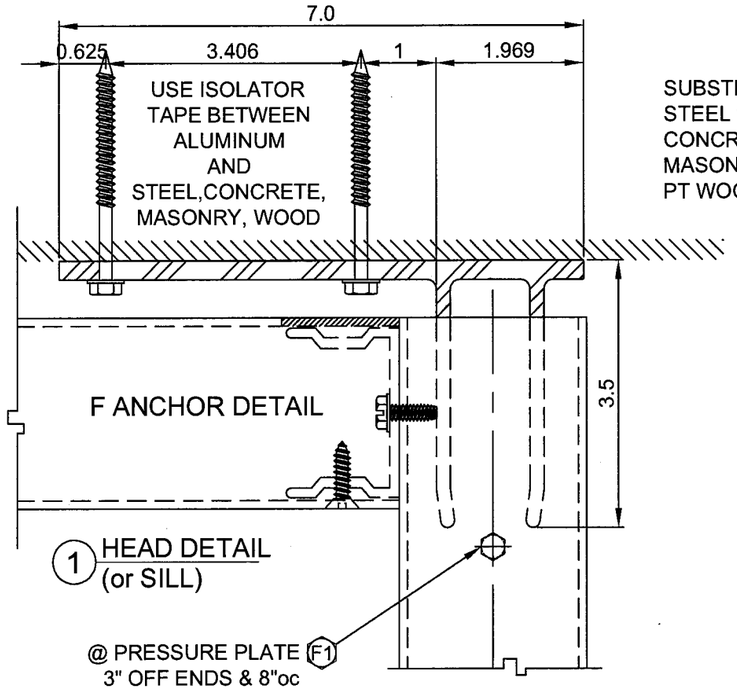

SUBSTRATE:
STEEL 1/8" thick Minimum
CONCRETE F'c = 3000 psi NWT
MASONRY ASTM C-90
PT WOOD SG=0.55

SEE TABLE 5 (THIS PAGE) FOR ANCHOR LOAD CAPACITY
SEE PAGE 8 & 9 FOR ANCHOR TYPE INFORMATON

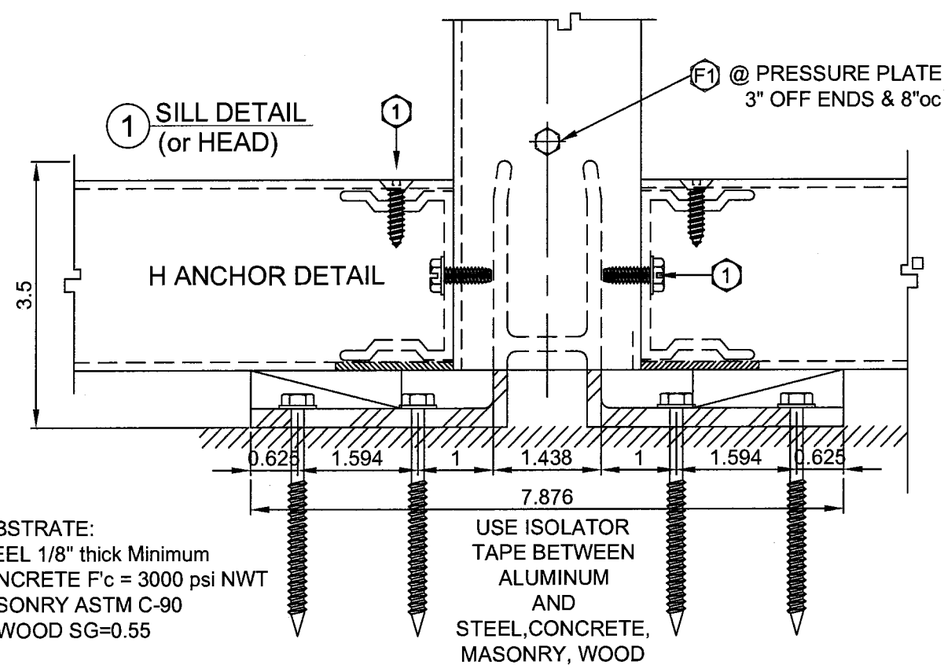

SUBSTRATE:
STEEL 1/8" thick Minimum
CONCRETE F'c = 3000 psi NWT
MASONRY ASTM C-90
PT WOOD SG=0.55

TABLE 5. ANCHOR LOAD CAPACITY

ANCHOR LOAD CAPACITY - PSF					ANCHOR LOAD CAPACITY - PSF				
		ANCHOR TYPE					ANCHOR TYPE		
Nominal	Dims.	A	B	C	Nominal	Dims.	A	B	C
D.L.O.	D.L.O.	EXT. (+)	EXT. (+)	EXT. (+)	D.L.O.	D.L.O.	EXT. (+)	EXT. (+)	EXT. (+)
WIDTH	HEIGHT	INT. (-)	INT. (-)	INT. (-)	WIDTH	HEIGHT	INT. (-)	INT. (-)	INT. (-)
12"	120"	106	106	106	12"	90"	106	106	106
18"	120"	106	106	106	18"	90"	106	106	106
24"	120"	106	106	106	24"	90"	106	106	106
30"	120"	106	106	106	30"	90"	106	106	106
33.5	120"	106	106	106	33.5	90"	106	106	106
33.6	120"	62	62	62	33.6	90"	62	62	62
36"	120"	62	62	62	36"	90"	62	62	62
42"	120"	62	62	62	42"	90"	62	62	62
45.5	120"	62	62	62	45.5	90"	62	62	62
12"	114"	106	106	106	12"	90"	106	106	106
18"	114"	106	106	106	18"	90"	106	106	106
24"	114"	106	106	106	24"	90"	106	106	106
30"	114"	106	106	106	30"	90"	106	106	106
33.5	114"	106	106	106	33.5	90"	106	106	106
33.6	114"	62	62	62	33.6	90"	62	62	62
36"	114"	62	62	62	36"	90"	62	62	62
42"	114"	62	62	62	42"	90"	62	62	62
45.5	114"	62	62	62	45.5	90"	62	62	62
12"	108"	106	106	106	12"	78"	106	106	106
18"	108"	106	106	106	18"	78"	106	106	106
24"	108"	106	106	106	24"	78"	106	106	106
30"	108"	106	106	106	30"	78"	106	106	106
33.5	108"	106	106	106	33.5	78"	106	106	106
33.6	108"	62	62	62	33.6	78"	62	62	62
36"	108"	62	62	62	36"	78"	62	62	62
42"	108"	62	62	62	42"	78"	62	62	62
45.5	108"	62	62	62	45.5	78"	62	62	62
12"	102"	106	106	106	12"	72"	106	106	106
18"	102"	106	106	106	18"	72"	106	106	106
24"	102"	106	106	106	24"	72"	106	106	106
30"	102"	106	106	106	30"	72"	106	106	106
33.5	102"	106	106	106	33.5	72"	106	106	106
33.6	102"	62	62	62	33.6	72"	62	62	62
36"	102"	62	62	62	36"	72"	62	62	62
42"	102"	62	62	62	42"	72"	62	62	62
45.5	102"	62	62	62	45.5	72"	62	62	62
12"	96"	106	106	106	12"	66"	106	106	106
18"	96"	106	106	106	18"	66"	106	106	106
24"	96"	106	106	106	24"	66"	106	106	106
30"	96"	106	106	106	30"	66"	106	106	106
33.5	96"	106	106	106	33.5	66"	106	106	106
33.6	96"	62	62	62	33.6	66"	62	62	62
36"	96"	62	62	62	36"	66"	62	62	62
42"	96"	62	62	62	42"	66"	62	62	62
45.5	96"	62	62	62	45.5	66"	62	62	62

Approved as complying with the Florida Building Code
Date JULY 29, 2009
NOA# 08-1114.05
Miami-Dade Product Control
Drawing
By Manuel Perez

Dade County
Product Approval

C. W. STATER, PE

4-15-09

FLA PE # 38425

REV	BY	DATE	DESCRIPTION

Arch Aluminum & Glass Co., Inc.
Your TRUE Single Source®
10200 N.W. 67TH STREET
TAMARAC, FLORIDA 33321
Tel. (800) 432-8132
Fax. (954) 724-9293

C. W. Stater, PE
FL PE License#38425
10200 N.W. 67th Street
Tamarac, FL 33321
Phone: 800-432-8132
cstater@archaluminum.net

drawn by: CWS

date: Apr. 15, 2009

system name: PBS-383 WINDOW WALL

drawing no: 08-1114.05

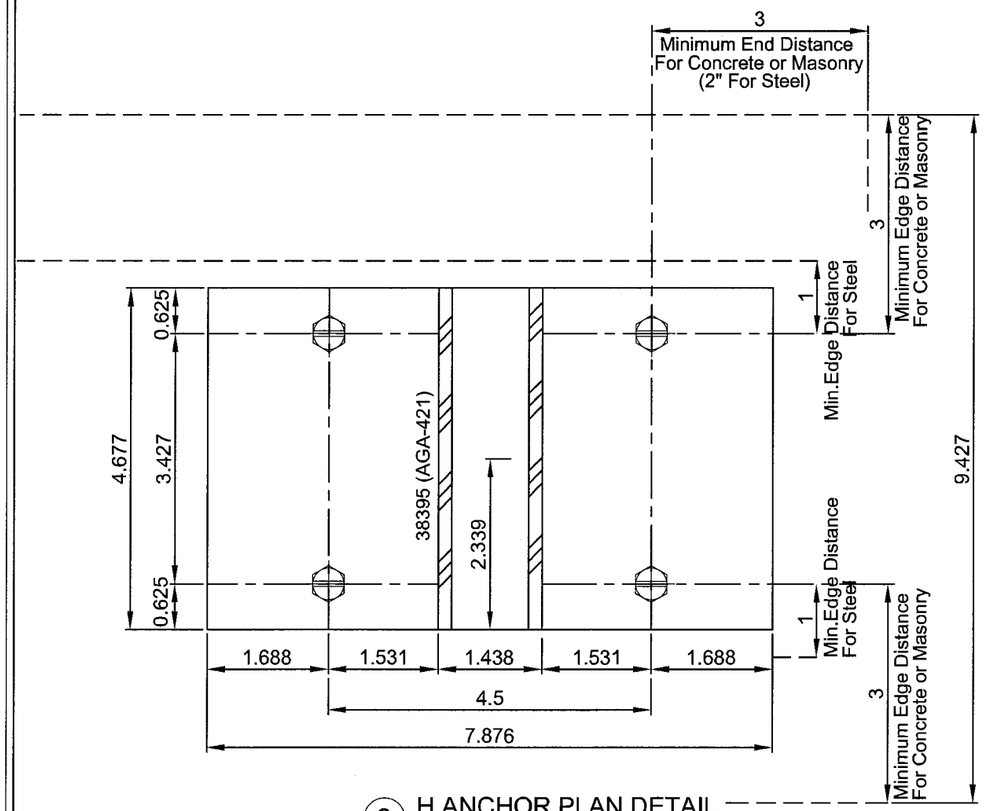

3 H ANCHOR PLAN DETAIL
@ *STEEL* (t_{min}=0.125")
@ *CONCRETE* or
@ *MASONRY*

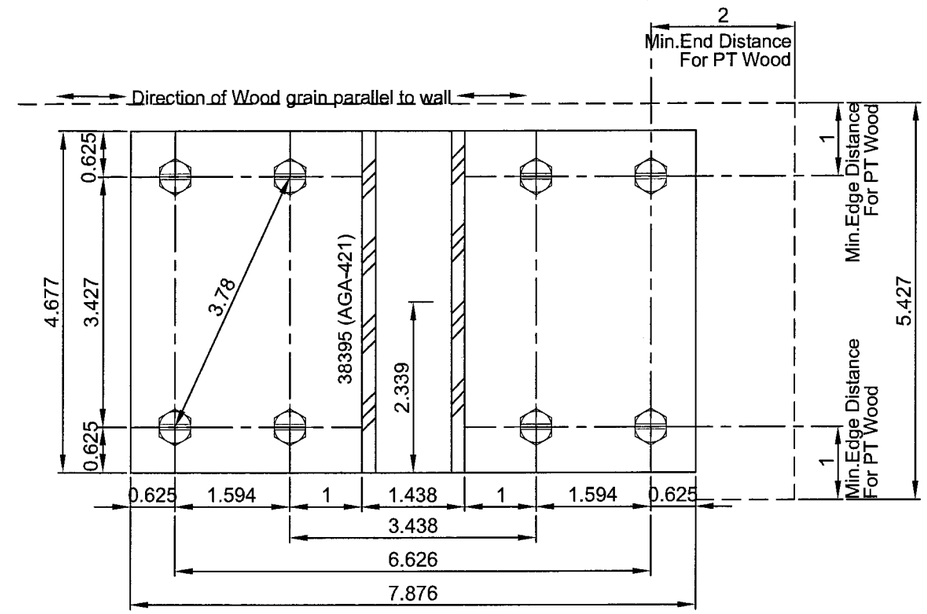

3 H ANCHOR PLAN DETAIL
WOOD CONSTRUCTION

ANCHOR TYPE-B
FOR STEEL CONSTRUCTION
Use (4) 5/16" dia., AB point, ASTM-A325, SAE GRADE 5
into 1/8" minimum thickness steel
Extending trreads 3/8" past plane of steel
with minimum edge distance = 1"

ANCHOR TYPE-C
FOR CONCRETE & GROUT FILLED MASONRY BLOCK ASTM C-90
Use (4) 3/8" dia. Powers 'Wedgebolt'
with 2" minimum embedment into
concrete F'c=3000psi NWT or ASTM C-90 Block
with 3" minimum edge distance

ANCHOR TYPE-A
FOR WOOD CONSTRUCTION
Use (8) 1/4" dia. Tapcon (by Elco or ITW)
with 1 1/2" minimum embedment into wood
Southern Yellow pine SG=0.55
with minimum edge distance = 1.0"
with minimum end distance = 2.0"
(Anchors shall NOT be applied to wood defects.)

Approved as complying with the Florida Building Code
Date JULY 29, 2009
NOA# 08-1114.05
Miami-Dade Product Control Division
By Manuel Perez

Dade County
Product Approval

C. W. STATER, PE

4-5-09

FLA PE # 38425

REV	BY	DATE	DESCRIPTION

Arch Aluminum & Glass Co., Inc.
Your TRUE Single Source®
10200 N.W. 67TH STREET
TAMARAC, FLORIDA 33321
Tel. (800) 432-8132
Fax. (954) 724-9293

C. W. Stater, PE
FL PE License#38425
10200 N.W. 67th Street
Tamarac, FL 33321
Phone: 800-432-8132
cstater@archaluminum.net

drawn by: CWS
date: Apr. 15, 2009
system name: PBS-383 WINDOW WALL
drawing no: 08-1114.05
Sheet 8 of 11

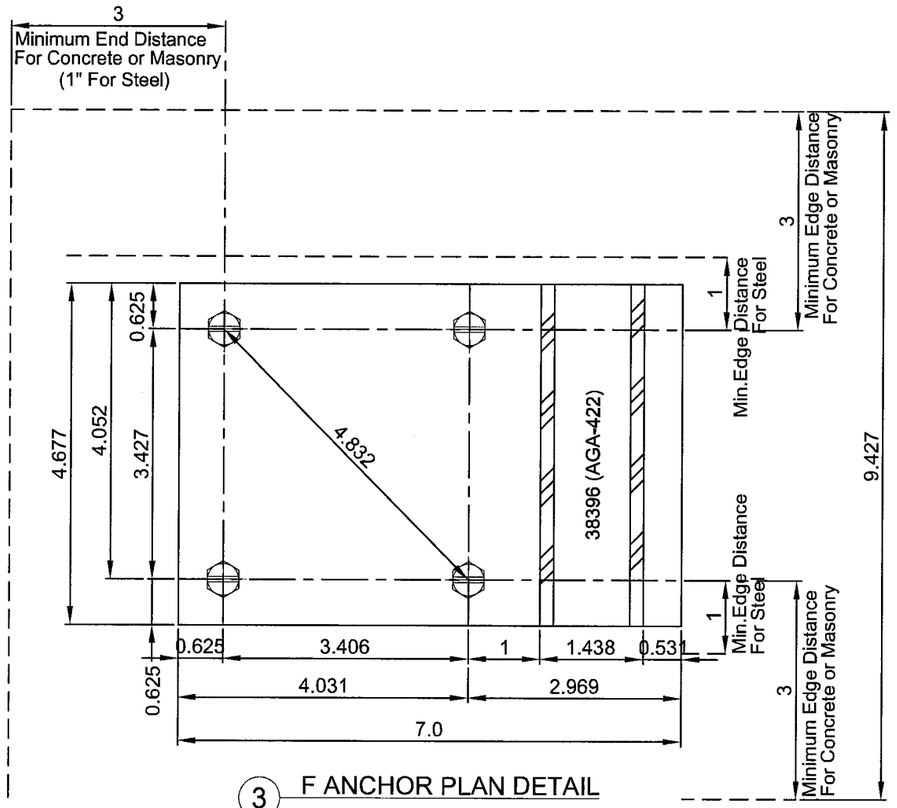

(3) F ANCHOR PLAN DETAIL

@ STEEL (t_{min}=0.125")
@ CONCRETE or
@ MASONRY

ANCHOR TYPE-B
FOR STEEL CONSTRUCTION
Use (4) 5/16" dia.,AB point, ASTM-A325, SAE GRADE 5
into 1/8" minimum thickness steel
Extending trreads 3/8" past plane of steel
with minimum edge distance = 1"

ANCHOR TYPE-C
FOR CONCRETE & GROUT FILLED MASONRY BLOCK ASTM C-90
Use (4) 3/8" dia. Powers 'Wedgebolt'
with 2" minimum embedment into
concrete F'c=3000psi NWT or ASTM C-90 Block
with 3" minimum edge distance

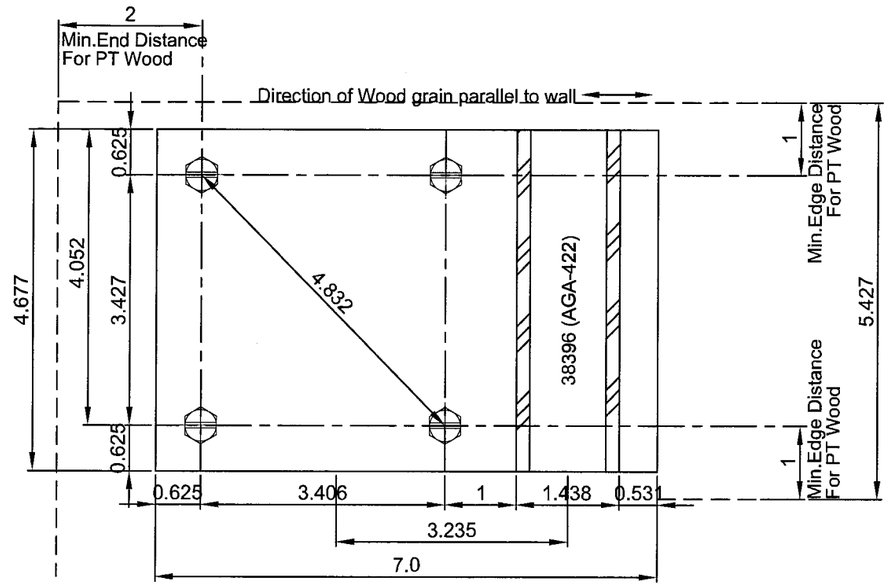

(3) F ANCHOR PLAN DETAIL
WOOD CONSTRUCTION

ANCHOR TYPE-A
FOR WOOD CONSTRUCTION
Use (4) 1/4" dia. Tapcon (by Elco or ITW)
with 1 1/2" minimum embedment into wood
Southern Yellow pine SG=0.55
with minimum edge distance = 1.0"
with minimum end distance = 2.0"
(Anchors shall NOT be applied to wood defects.)

Approved as complying with the
Florida Building Code
Date JULY 29 2009
NOA# 08-1114.05
Miami-Dade Product Control
Division
By Manuel Cruz

Dade County
Product Approval

C. W. STATER, PE

4-15-09

FLA PE # 38425

REV	BY	DATE	DESCRIPTION

Arch Aluminum & Glass Co., Inc.
Your TRUE Single Source®
10200 N.W. 67TH STREET
TAMARAC, FLORIDA 33321
Tel. (800) 432-8132
Fax. (954) 724-9293

C. W. Stater, PE
FL PE License#38425
10200 N.W. 67th Street
Tamarac, FL 33321
Phone: 800-432-8132
cstater@archaluminum.net

drawn by: CWS

date: Apr. 15, 2009

system name: PBS-383 WINDOW WALL

drawing no: 08-1114.05

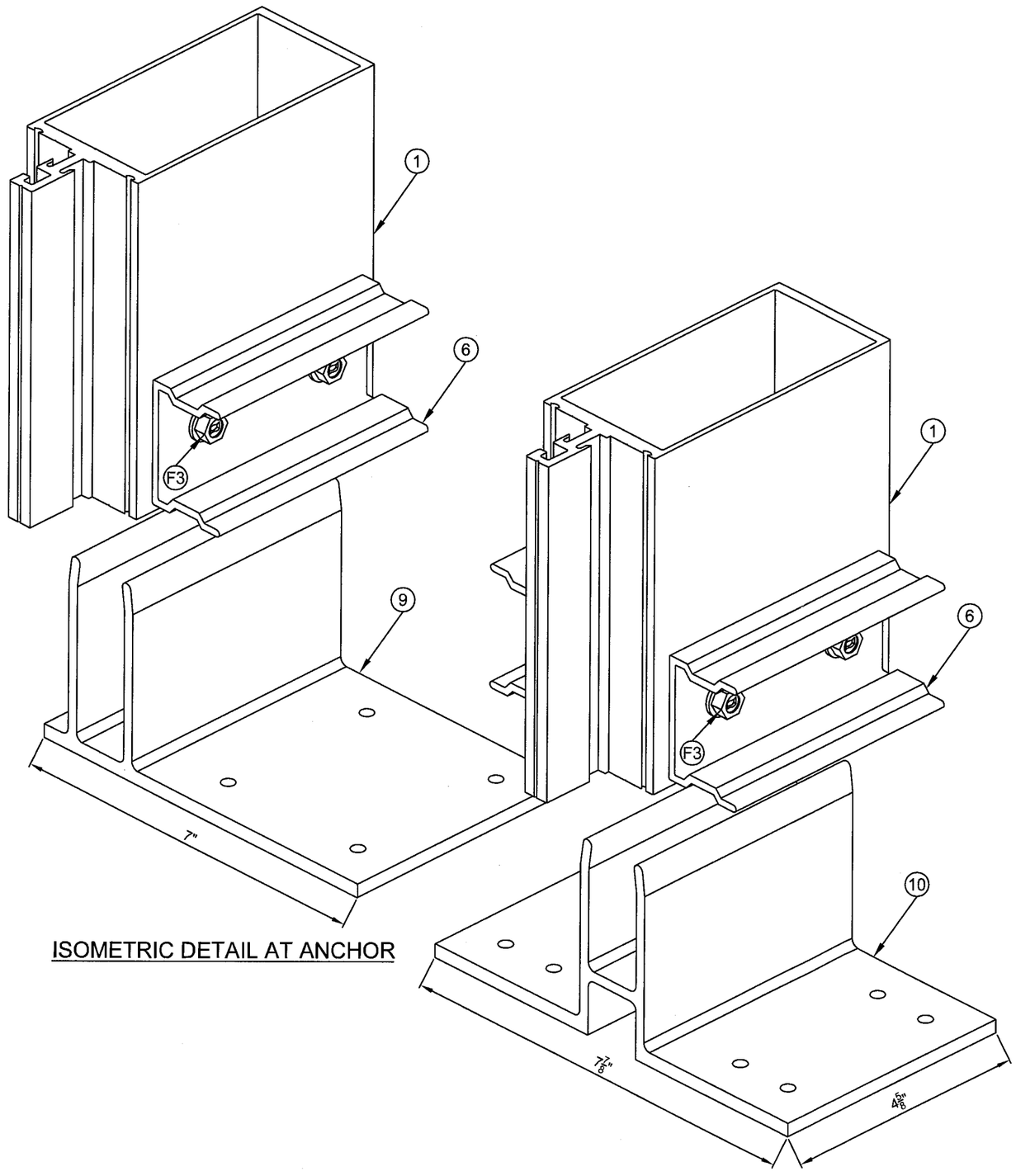

ISOMETRIC DETAIL AT ANCHOR

Approved as complying with the Florida Building Code
Date: JULY 29, 2009
NOA#: 08-1114.05
Miami-Dade Product Control Division
By: Manuel Perez

Dade County
Product Approval

C. W. STATER, PE

4-15-09

FLA PE # 38425

REV	BY	DATE	DESCRIPTION

Arch Aluminum & Glass Co., Inc.
Your TRUE Single Source®
10200 N.W. 67TH STREET
TAMARAC, FLORIDA 33321
Tel. (800) 432-8132
Fax. (954) 724-9293

C. W. Stater, PE
FL PE License#38425
10200 N.W. 67th Street
Tamarac, FL 33321
Phone: 800-432-8132
cstater@archaluminum.net

drawn by: CWS

date: Apr. 15, 2009

system name: PBS-383 WINDOW WALL

drawing no: 08-1114.05

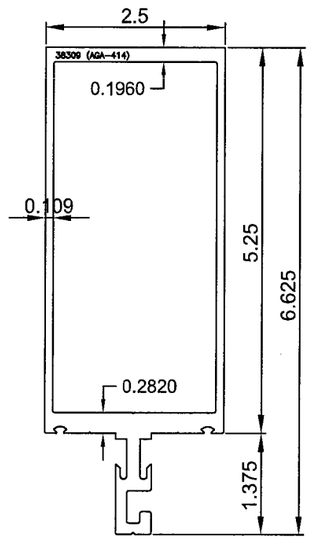

① 38309 (AGA-414)

② 38364 (AGA-392-1)
38168 ISOLATOR

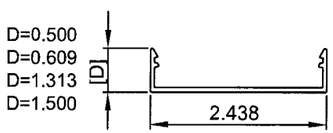

③ 38349 (AGA-383-1)

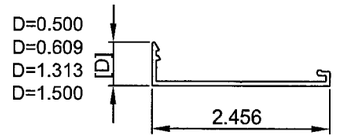

⑤ 38315 (AGA-764)

SHEAR CLIP TYPE 1

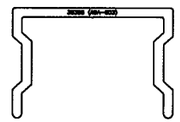

⑥ 38355 (AGA-603)

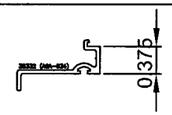

⑦ 38332 (AGA-634)

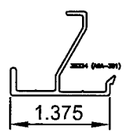

⑧ 38334 (AGA-391)

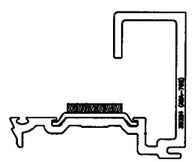

④ 38324 (AGA-765)
38168 ISOLATOR

	ITEM#	PART #	DESCRIPTION	MATERIAL	SUPPLIER/REMARKS
	①	38309	TYPICAL MULLION	6063-T6	ARCH ALUMINUM
G1 05481	②	38364	CENTER PRESSURE PLATE	6005-T6	ARCH ALUMINUM
	③	38349	COVER CAP (SEE THICKNESSES)	6063-T5	ARCH ALUMINUM
	④	38324	END PRESSURE PLATE	6063-T6	ARCH ALUMINUM
G2 BN0812	⑤	38315	END COVER CAP (THICKNESSES)	6063-T5	ARCH ALUMINUM
	⑥	38355	SHEAR BLOCK	6063-T5	ARCH ALUMINUM
	⑦	38332	GLAZING ADAPTOR	6063-T5	ARCH ALUMINUM
G3 05337	⑧	38334	1" GLAZING ADAPTOR	6063-T5	ARCH ALUMINUM
	⑨	38396	F-ANCHOR	6005-T6	ARCH ALUMINUM
	⑩	38395	H-ANCHOR	6005-T6	ARCH ALUMINUM
F1					
	G1	05841	GLAZING GASKET	EPDM	CHECK SPECS DATA
F2 23167	G2	BN0812	0.25" x .625" SETTING BLOCK	EPDM	DURO 85 +/-5
	G3	05337	GLAZING GASKET	EPDM	CHECK SPECS DATA
F3 23261	F1		#12-14 x 7/8" Drill-Flex(Elco)	Stalgard	@ 8"O.C.(NO substitution)
	F2	23167	#12-24 x 3/4" FHPMS S/S SELF TAP		2 PER SHEAR CLIP
	F3	23261	#1/4"-20 x 5/8" HWHS SLOTTED HEAD		2 PER SHEAR CLIP
			*** GLASS TYPE SPECIFICATON***		
	GL-1	GL-1	9/16" LAMI GLASS (1/4" HS + 0.090" SAFLEX IIIG + 1/4" HS)		
			SAFLEX IIIG Interlayer is Manufactured by SOLUTIA, INC.		
	GL-2	GL-2	9/16" LAMI GLASS (1/4" HS + 0.10" SAFLEX HP + 1/4" HS)		
			SAFLEX HP Interlayer is Manufactured by SOLUTIA, INC.		
	GL-3	GL-3	9/16" LAMI GLASS (1/4" HS + 0.090" SentryGlass Plus + 1/4" HS)		
			SentryGlass Plus Interlayer Manufactured by E.I.Dupont De Nemours & Co.,Inc.		

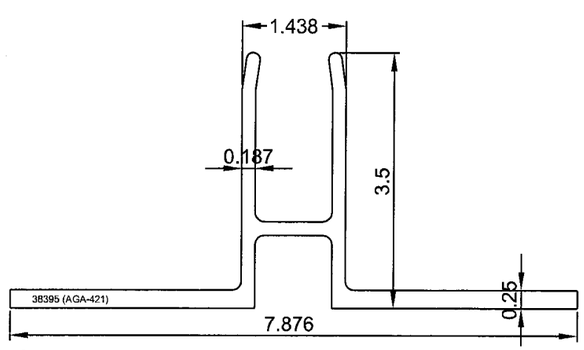

⑩ 38395 (AGA-421)

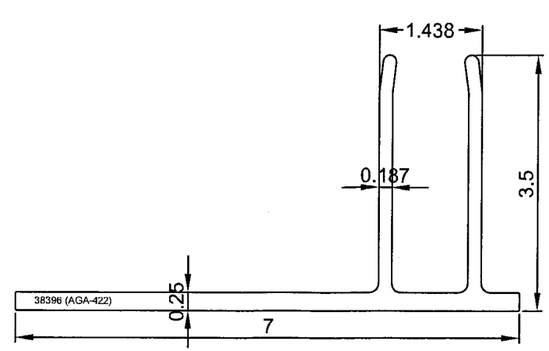

⑨ 38396 (AGA-422)

Approved as complying with the Florida Building Code
Date JULY 27, 2009
NOA# 08-1114.05
Miami-Dade Product Control Division
By Manuel Perez

Dade County
Product Approval

C. W. STATER, PE

4-15-2009

FLA PE # 38425

REV	BY	DATE	DESCRIPTION

Arch Aluminum & Glass Co., Inc.
Your TRUE Single Source®
10200 N.W. 67TH STREET
TAMARAC, FLORIDA 33321
Tel. (800) 432-8132
Fax. (954) 724-9293

C. W. Stater, PE
FL PE License#38425
10200 N.W. 67th Street
Tamarac, FL 33321
Phone: 800-432-8132
cstater@archaluminum.net

drawn by: CWS

date: Apr. 15, 2009

system name: PBS-383 WINDOW WALL

drawing no: 08-1114.05