MIAMI-DADE COUNTY
BUILDING CODE COMPLIANCE OFFICE (BCCO)
PRODUCT CONTROL DIVISION

MIAMI-DADE COUNTY, FLORIDA
METRO-DADE FLAGLER BUILDING
140 WEST FLAGLER STREET, SUITE 1603
MIAMI, FLORIDA 33130-1563
(305) 375-2901 FAX (305) 372-6339
www.maimidade.gov/buildingcode

NOTICE OF ACCEPTANCE (NOA)

CGI Windows & Doors
10100 NW 25 St.
Miami, FL 33172

SCOPE:

This NOA is being issued under the applicable rules and regulations governing the use of construction materials. The documentation submitted has been reviewed by Miami-Dade County Product Control Division and accepted by the Board of Rules and Appeals (BORA) to be used in Miami Dade County and other areas where allowed by the Authority Having Jurisdiction (AHJ).

This NOA shall not be valid after the expiration date stated below. The Miami-Dade County Product Control Division (In Miami Dade County) and/or the AHJ (in areas other than Miami Dade County) reserve the right to have this product or material tested for quality assurance purposes. If this product or material fails to perform in the accepted manner, the manufacturer will incur the expense of such testing and the AHJ may immediately revoke, modify, or suspend the use of such product or material within their jurisdiction. BORA reserves the right to revoke this acceptance, if it is determined by Miami-Dade County Product Control Division that this product or material fails to meet the requirements of the applicable building code. This product is approved as described herein, and has been designed to comply with the Florida Building Code, including the High Velocity Hurricane Zone.

DESCRIPTION: Series 238 Aluminum Fixed Window – L.M.I.

APPROVAL DOCUMENT: Drawing No. **W99-10,** titled "Series-238 Aluminum Fixed Window", sheets 1 through 12 of 12, dated 02/19/99 with revision F dated 10/07/08, prepared by Al-Farooq Corporation, signed and sealed by Humayoun Farooq, P. E., bearing the Miami-Dade County Product Control Revision stamp with the Notice of Acceptance number and expiration date by the Miami-Dade County Product Control Division.

MISSILE IMPACT RATING: Large and Small Missile Impact Resistant

LABELING: Each unit shall bear a permanent label with the manufacturer's name or logo, city, state and following statement: "Miami-Dade County Product Control Approved", unless otherwise noted herein.

RENEWAL of this NOA shall be considered after a renewal application has been filed and there has been no change in the applicable building code negatively affecting the performance of this product.

TERMINATION of this NOA will occur after the expiration date or if there has been a revision or change in the materials, use, and/or manufacture of the product or process. Misuse of this NOA as an endorsement of any product, for sales, advertising or any other purposes shall automatically terminate this NOA. Failure to comply with any section of this NOA shall be cause for termination and removal of NOA.

ADVERTISEMENT: The NOA number preceded by the words Miami-Dade County, Florida, and followed by the expiration date may be displayed in advertising literature. If any portion of the NOA is displayed, then it shall be done in its entirety.

INSPECTION: A copy of this entire NOA shall be provided to the user by the manufacturer or its distributors and shall be available for inspection at the job site at the request of the Building Official.

This NOA **revises and renews NOA # 08-1010.01** and consists of this page 1 and evidence pages E-1, E-2 and E-3, as well as approval document mentioned above.

The submitted documentation was reviewed by **Manuel Perez, P.E.**

MIAMI-DADE COUNTY APPROVED

NOA No. 08-1114.06
Expiration Date: October 26, 2013
Approval Date: February 18, 2009

CGI Windows & Doors

NOTICE OF ACCEPTANCE: EVIDENCE SUBMITTED

A. DRAWINGS

1. Manufacturer's die drawings and sections.
2. Drawing No **W99-10**, Sheets 1 through 12 of 12, titled "Series -238 Aluminum Fixed Window", dated 02/19/99 with revision F dated 10/07/08, prepared by Al-Farooq Corporation, signed and sealed by Humayoun Farooq, P.E.

B. TESTS

1. Test report on: 1) Air Infiltration Test, per FBC, TAS 202-94
   2) Uniform Static Air Pressure Test, Loading per FBC TAS 202-94
   3) Water Resistance Test, per FBC, TAS 202-94
   4) Forced Entry Test, per FBC 2411 3.2.1, TAS 202-94
   5) Large Missile Impact Test, per TAS 201-94.
   6) Cyclic Wind Pressure Loading, per TAS 203-94.

   along with marked-up drawings and installation diagram of aluminum fixed windows, prepared by Hurricane Testing Lab, Inc., Test Reports No: **HTL-0080-0301-07**, dated 10/13/06 for specimens J, K, L, M, N & P and **HTL-0080-0905-06**, dated 10/13/06 for specimen H, signed and sealed by Vinu J. Abraham, P.E.
2. Test report on: 1) Air Infiltration Test, per FBC, TAS 202-94
   2) Uniform Static Air Pressure Test, Loading per FBC TAS 202-94
   3) Water Resistance Test, per FBC, TAS 202-94
   4) Forced Entry Test, per FBC 2411 3.2.1, TAS 202-94

   along with marked-up drawings and installation diagram of aluminum casement, project-out and fixed windows, prepared by Hurricane Testing Lab, Inc., Test Reports No: **HTL-0080-0301-07**, dated 09/21/07 for specimens A & G and **HTL-0080-0905-07**, dated 10/12/06 for specimen B & C, signed and sealed by Vinu J. Abraham, P.E.
3. Test report on: 1) Large Missile Impact Test, per PA 201-94.
   2) Cyclic Wind Pressure Loading, per PA 203-94.

   along with installation diagram of an aluminum casement window, prepared by Hurricane Test Laboratory, Inc. Report No. **HETI-08-2143** dated 06/27/08, signed and sealed by Candido F. Font, P.E.
4. Test report on: 1) Large Missile Impact Test, per PA 201-94.
   2) Cyclic Wind Pressure Loading, per PA 203-94.

   along with installation diagram of an aluminum project-out window, prepared by Hurricane Test Laboratory, Inc. Report No. **HETI-08-2144** dated 06/27/08, signed and sealed by Candido F. Font, P.E.
5. Test report on: 1) Large Missile Impact Test, per PA 201-94.
   2) Cyclic Wind Pressure Loading, per PA 203-94.

   along with installation diagram of an aluminum fixed window, prepared by Hurricane Test Laboratory, Inc. Report No. **HETI-07-4287** dated 07/17/08, signed and sealed by Candido F. Font, P.E.

Manuel Perez, P.E.
Product Control Examiner
NOA No. 08-1114.06
Expiration Date: October 26, 2013
Approval Date: February 18, 2009

NOTICE OF ACCEPTANCE: EVIDENCE SUBMITTED

6. Test report on: 1) Large Missile Impact Test, per PA 201-94.
   2) Cyclic Wind Pressure Loading, per PA 203-94.
   along with installation diagram of an aluminum casement window, prepared by Hurricane Test Laboratory, Inc. Report No. **HETI-07-4298** dated 07/17/08, signed and sealed by Candido F. Font, P.E.
7. Test report on: 1) Air Infiltration Test, per SFBC PA 202-94
   2) Uniform Static Air Pressure Test, Loading per SFBC PA 202-94.
   3) Water Resistance Test, per SFBC PA 202-94.
   along with installation diagram of CGI 238 alum. fixed window, prepared by Hurricane Testing Lab, Inc, Test Report No. **HTL-0080-1107-98,** dated Nov. 10, 1998, signed and sealed by Timothy S. Marshall, P.E.
   (Submitted under NOA# 06-0928.03)
8. Test report on: 1) Large Missile Impact Test, per PA 201-94.
   2) Cyclic Wind Pressure Loading, per PA 203-94
   along with marked-up drawings and installation diagram of an aluminum fixed window, prepared by Hurricane Testing Lab, Inc., Test Reports No. **HTL-0080-0203-99 & HTL-0080-0606-99**, dated 11/29/99 for specimen #1, 2, 3, signed and sealed by Timothy S. Marshall, P.E.
   (Submitted under NOA# 06-0928.03)
9. Test report on 1) Uniform Static Air Pressure Test, Loading per ASTM E330.
   along with installation diagram of a Series CGI 238 alum. fixed windows, prepared by Hurricane Test Laboratory, Inc. Test Report No. **HTL-0080-1127-98,** dated 11/10/98, signed and sealed by Timothy S. Marshall, P.E.
   (Submitted under NOA# 06-0928.03)
10. Test report on: 1) Large Missile Impact Test, per PA 201-94.
    2) Cyclic Wind Pressure Loading, per PA 203-94.
    along with installation diagram alum. fixed, casement and project-out windows, prepared by American Test Lab of South Florida Test Report No. **ATL-1209.01-94,** dated 2/20/95, signed and sealed by Gerard B. Sullivan, P.E.
    (Submitted under NOA# 06-0928.03) (For Reference only).
11. Test report on: 1) Large Missile Impact Test, per PA 201-94.
    2) Cyclic Wind Pressure Loading, per PA 203-94
    Along with marked-up drawings and installation diagram of an aluminum casement window, prepared by Hurricane Testing Lab, Inc., Test Reports No. **HTL-0080-0303-96**, dated 03/06/96 for specimen #1, 2, 3 & 4 and **FTL-1041** dated 10/14/94, signed and sealed by Timothy S. Marshall, P.E.
    (Submitted under NOA# 06-0928.03) (For Reference only)
    (For reference only). (Submitted under previous NOA# 01-1002.03)

Manuel Perez, P.E.
Product Control Examiner
NOA No. 08-1114.06
Expiration Date: October 26, 2013
Approval Date: February 18, 2009

NOTICE OF ACCEPTANCE: EVIDENCE SUBMITTED

C. CALCULATIONS

1. Anchor verification calculations and structural analysis, complying with FBC-2004 and 2007, prepared by Al-Farooq Corporation, dated 08/30/06, 11/29/07 and 11/06/08, all signed and sealed by Humayoun Farooq, P.E.
   Complies with ASTM E1300-02/04.

D. QUALITY ASSURANCE

1. Miami Dade Building Code Compliance Office (BCCO).

E. MATERIAL CERTIFICATIONS

1. Notice of Acceptance No. **06-0216.06** issued to Solutia Inc. for their "**Saflex IIIG Clear or colored Interlayer**" dated 05/04/06, expiring on 05/21/11.

F. STATEMENTS

1. Statement letter of compliance w/ FBC-2004 and 2007 dated 10/01/08, signed and sealed by Humayoun Farooq, P.E.
2. Statement letter of no financial interest, dated 10/01/08, signed and sealed by Humayoun Farooq, P.E.

G. OTHER

1. Notice of Acceptance No. **08-1010.01**, issued to CGI Windows & Doors for their Series 238 Aluminum Fixed Window – L.M.I., approved on 11/20/08 and expiring on 10/26/09.

Manuel Perez, P.E.
Product Control Examiner
NOA No. 08-1010.01
Expiration Date: October 26, 2009
Approval Date: February 18, 2009

GENERAL WINDOW SECTIONS
FLANGE FRAME

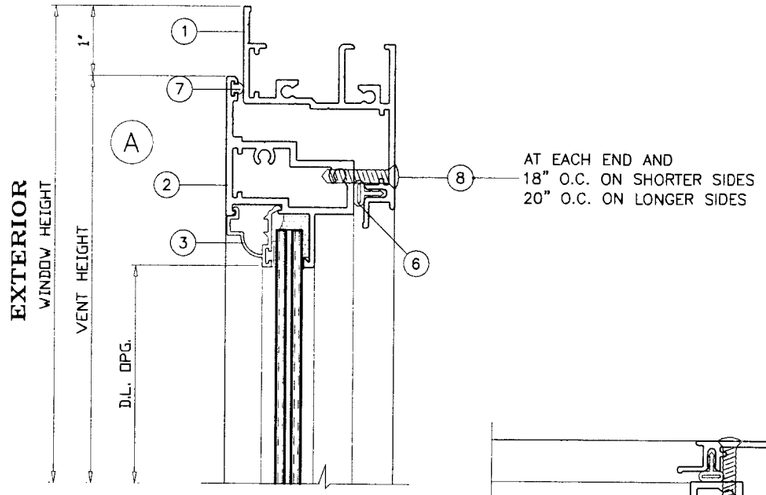

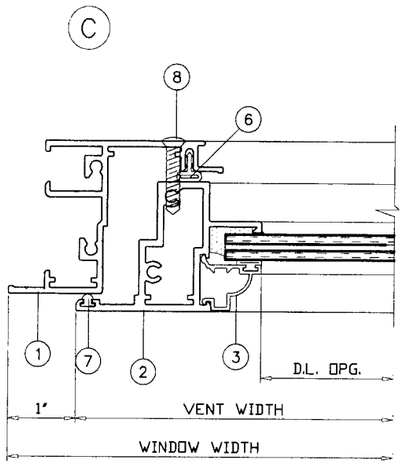

FOR GLASS TYPES
REFER TO
SHEETS 3 THRU 6

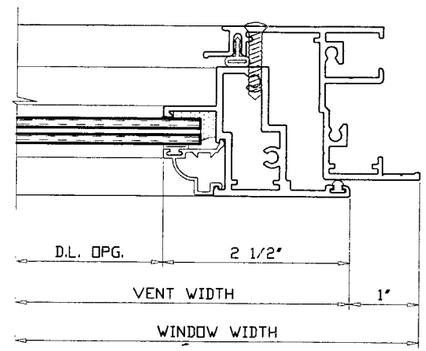

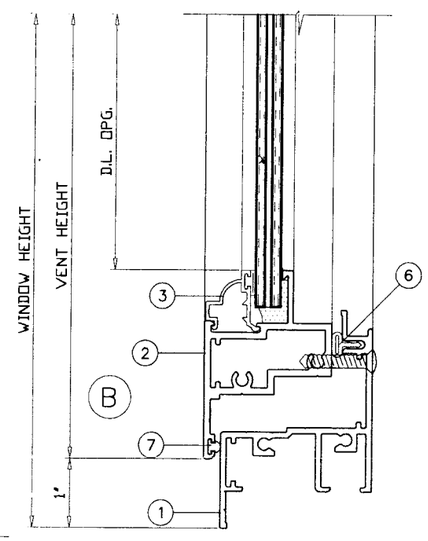

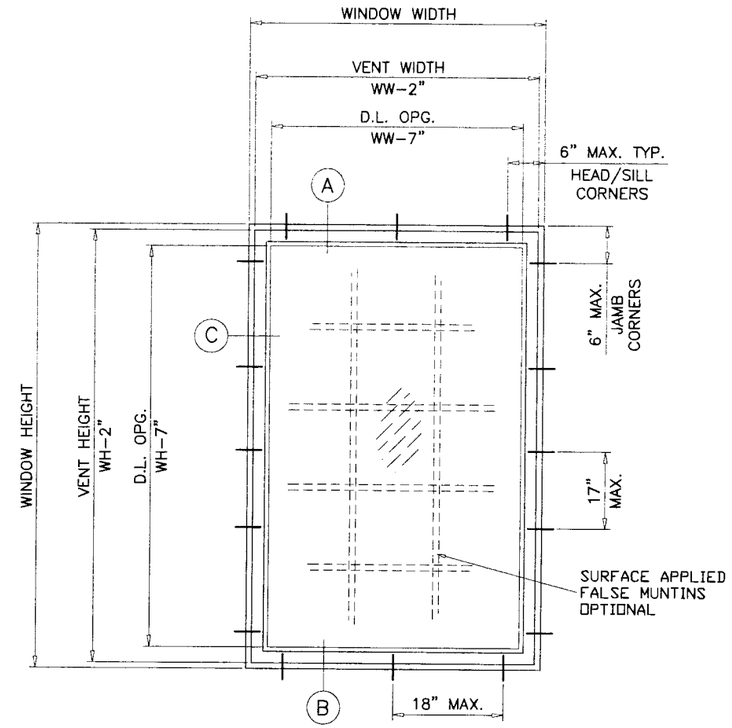

TYPICAL ELEVATION
(FLANGE FRAME)

MAX. ANCHOR SPACING TO BE AS FOLLOWS
17" O.C. ON LONGER SIDES
18" O.C. ON SHORTER SIDES

FOR MULLION/MULTIPLE UNITS, REFER TO
SEPARATE CGI MULLION N.O.A.

THESE WINDOWS ARE RATED FOR LARGE MISSILE IMPACT.
SHUTTERS ARE NOT REQUIRED.

INSTRUCTIONS:

USE CHARTS AS FOLLOWS.

STEP 1 DETERMINE DESIGN WIND LOAD REQUIREMENT BASED ON WIND VELOCITY, BLDG. HEIGHT, WIND ZONE USING APPLICABLE ASCE 7 STANDARD.

STEP 2 SEE CHARTS ON SHEETS 4 THRU 6 FOR DESIGN LOAD CAPACITY OF DESIRED GLASS SIZE/TYPE.

STEP 3 USING CHART ON SHEETS 9 & 10 SELECT ANCHOR OPTION WITH DESIGN RATING MORE THAN DESIGN LOAD SPECIFIED IN STEP 1 ABOVE.

STEP 4 IF ALUMINUM BUCK SYSTEM IS USED USE CHART ON SHEETS 11 & 12 TO DETERMINE CAPACITY.

STEP 5 THE LOWEST VALUE RESULTING FROM STEPS 2, 3 AND 4 SHALL APPLY TO ENTIRE SYSTEM.

NOTES:

THIS PRODUCT HAS BEEN DESIGNED AND TESTED TO COMPLY WITH THE REQUIREMENTS OF THE FLORIDA BUILDING CODE 2004/2007 EDITION INCLUDING HIGH VELOCITY HURRICANE ZONE (HVHZ).

WOOD BUCKS BY OTHERS, MUST BE ANCHORED PROPERLY TO TRANSFER LOADS TO THE STRUCTURE.

ANCHORS SHALL BE AS LISTED, SPACED AS SHOWN ON DETAILS, ANCHORS EMBEDMENT TO BASE MATERIAL SHALL BE BEYOND WALL DRESSING OR STUCCO.

ANCHORING OR LOADING CONDITIONS NOT SHOWN IN THESE DETAILS ARE NOT PART OF THIS APPROVAL.

A LOAD DURATION INCREASE IS USED IN DESIGN OF ANCHORS INTO WOOD ONLY.

MATERIALS INCLUDING BUT NOT LIMITED TO STEEL/METAL SCREWS, THAT COME INTO CONTACT WITH OTHER DISSIMILAR MATERIALS SHALL MEET THE REQUIREMENTS OF 2004/2007 FLORIDA BLDG. CODE SECTION 2003.8.4.

Engr: DR. HUMAYOUN FAROOQ
STRUCTURES
FLA. PE # 16557
C.A.N. 3538

NOV 07 2008

PR[illegible] REVISED
as co[illegible] with the Florida
Buil[illegible]
Acce[illegible] 08-1114.06
Expir[illegible] OCT. 26, 2013
By [illegible]
Miami-Dade Product Control
Divisi[illegible]

AL-FAROOQ CORPORATION
ENGINEERS & PRODUCT DEVELOPMENT
1235 S.W. 87 AVE
MIAMI, FLORIDA 33174
TEL. (305) 264-8100 FAX. (305) 262-6978

COMP-ANL\W99-10CGI

SERIES-238 ALUMINUM FIXED WINDOW

CGI WINDOWS & DOORS
10100 N.W. 25TH STREET
DORAL, FL. 33172
TEL. (305) 593-6590 FAX. (305) 593-6592

revisions:

no	date	by	description
B	08.09.01		CHARTS REV. PER ASTM E-1300
C	10.04.01		3A, 4 & 6 REV./BCCO COMMENTS
D	08.26.06		UPDATED FOR 2004 FBC
E	02.05.08		NO CHANGE THIS SHEET
F	10.07.08		GENERAL REV.

date: 02-19-99
scale: 1/2" = 1"
dr. by: HAMID
chk. by:

drawing no.
W99-10

GENERAL WINDOW SECTIONS
EQUAL LEG FRAME

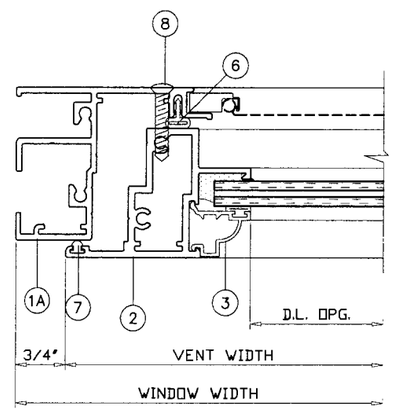

EXTERIOR

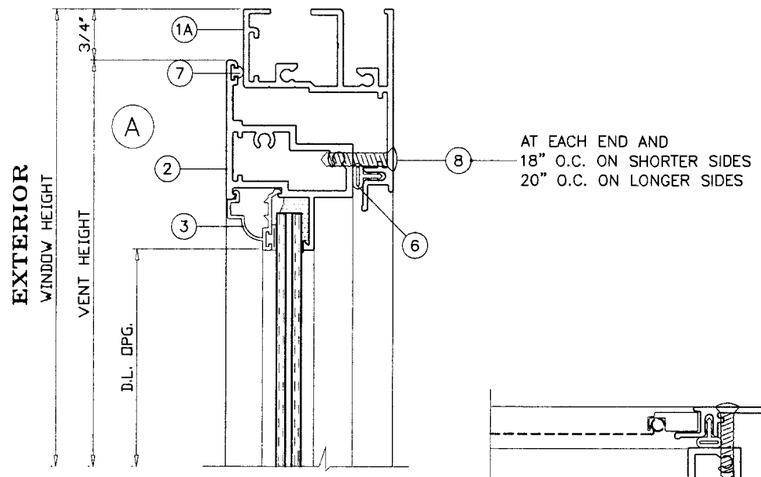

FOR GLASS TYPES,
REFER TO
SHEETS 3 THRU 6

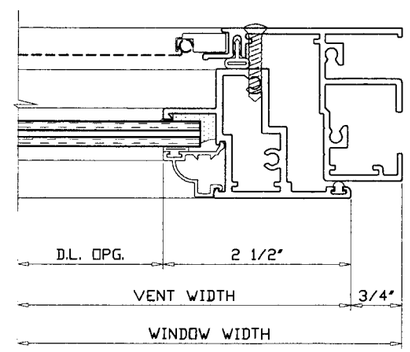

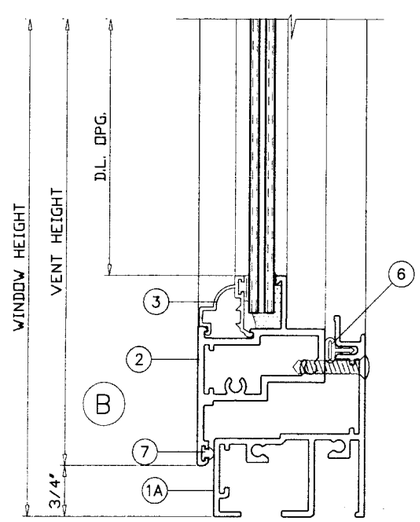

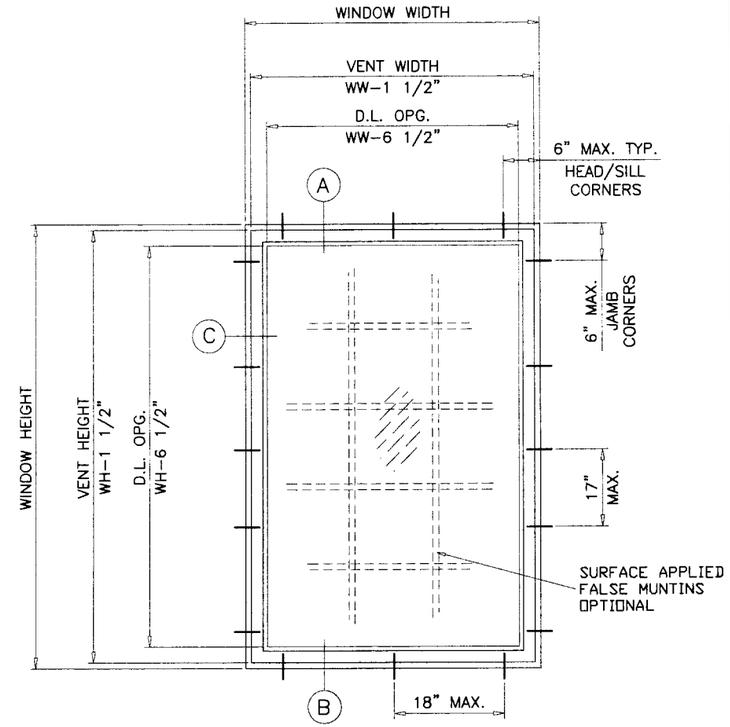

TYPICAL ELEVATION
(EQUAL LEG FRAME)

MAX. ANCHOR SPACING TO BE AS FOLLOWS
17" O.C. ON LONGER SIDES
18" O.C. ON SHORTER SIDES

Engr: DR. HUMAYOUN FAROOQ
STRUCTURES
FLA. PE # 16557
C.A.N. 3538

NOV 07 2008

PRODUCT REVIEWED
as complying with the Florida
Building Code
Acceptance No. OB-1114.06
Expiration Date Oct. 26, 2013
By Manuel Perez
Miami-Dade Product Control
Division

AL-FAROOQ CORPORATION
ENGINEERS & PRODUCT DEVELOPMENT
1235 S.W. 87 AVE
MIAMI, FLORIDA 33174
TEL. (305) 264-8100 FAX. (305) 262-6978
COMP-ANL\W99-10CGI

SERIES-238 ALUMINUM FIXED WINDOW

CGI WINDOWS & DOORS
10100 N.W. 25TH STREET
DORAL, FL. 33172
TEL. (305) 593-6590 FAX. (305) 593-6592

revisions:			
no	date	by	description
F	10.07.08		GENERAL REV.

date: 02-19-99
scale: 1/2" = 1"
dr. by: HAMID
chk. by:

drawing no.
W99-10

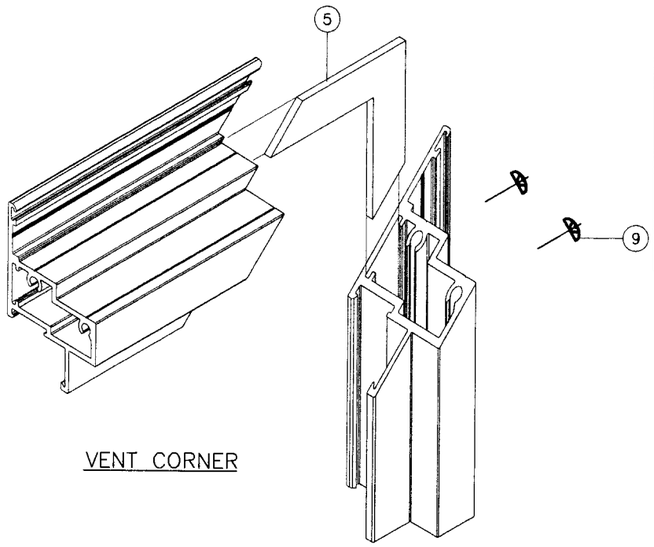

VENT CORNER

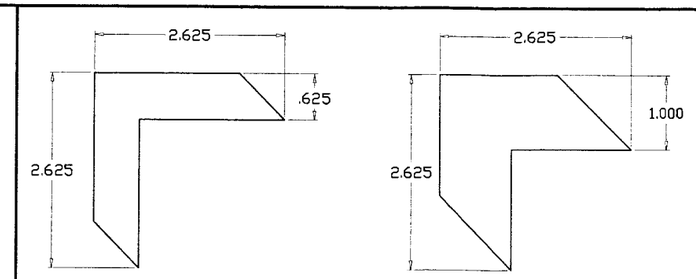

CORNER KEY
.060 THICK ST. STEEL

CORNER KEY
.062 THICK ALUMINUM

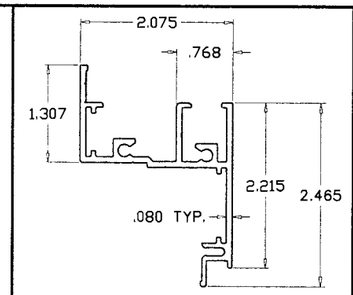

FLANGE FRAME

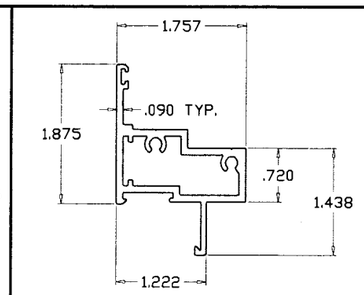

VENT (5/16" LAM. GLASS)

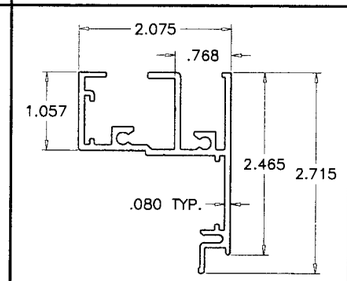

EQUAL LEG FRAME

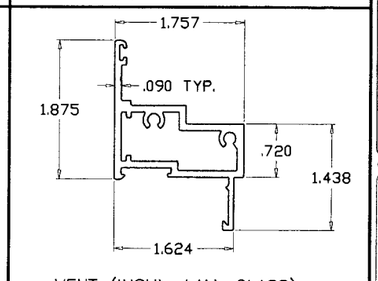

VENT (INSUL. LAM. GLASS)

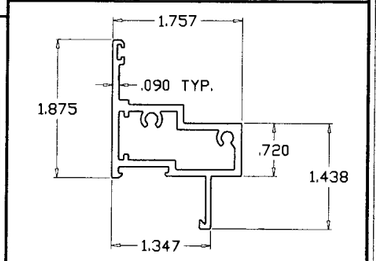

VENT (7/16" LAM. GLASS)

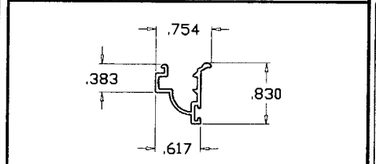

CGI-375: OGEE GLAZING STOP

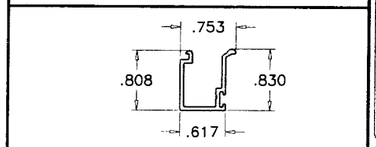

CGI-396: SQUARE GLAZING STOP

ALL FRAME AND VENT CORNERS TO BE SEALED WITH GE SILPRUF OR EQUIV.

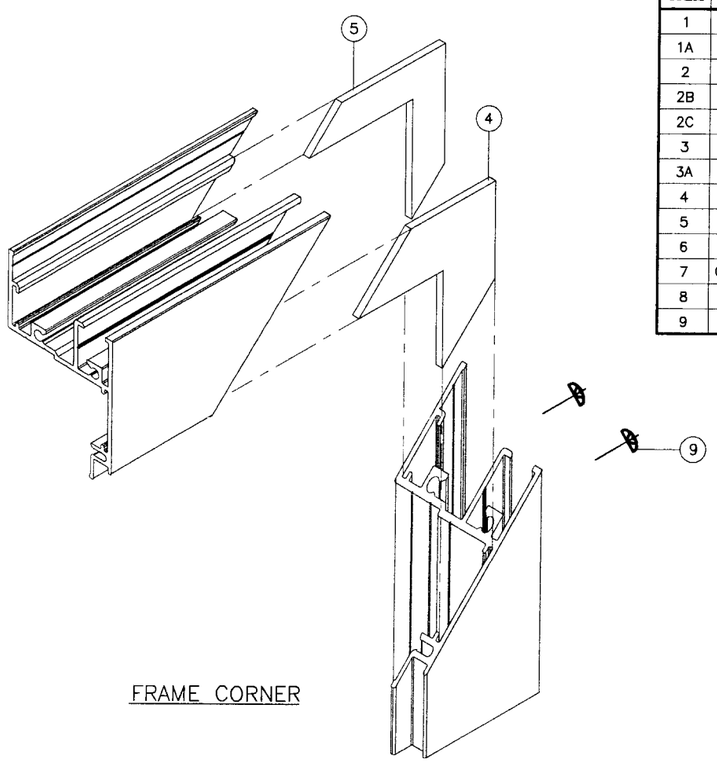

FRAME CORNER

ITEM	PART #	QUANTITY	DESCRIPTION	MATERIAL	MANF./SUPPLIER/REMARKS
1	CGI-373	4	FLANGE FRAME	6063-T6	INDALEX OR EQUIV.
1A	CGI-397	4	EQUAL LEG FRAME	6063-T6	INDALEX OR EQUIV.
2	CGI-378	4	VENT (5/16" LAM. GLASS)	6063-T6	INDALEX OR EQUIV.
2B	CGI-381	4	VENT (INSUL. LAM. GLASS)	6063-T6	INDALEX OR EQUIV.
2C	CGI-385	4	VENT (7/16" LAM. GLASS)	6063-T6	INDALEX OR EQUIV.
3	CGI-375	4	OGEE GLAZING BEAD	6063-T5	INDALEX OR EQUIV.
3A	CGI-396	4	SQUARE GLAZING BEAD	6063-T5	INDALEX OR EQUIV.
4	–	4	.060 THICK CORNER KEY	ALUMINUM	–
5	–	8	.060 THICK CORNER KEY	ST. STEEL	–
6	AP-425	AS REQD.	FRAME WEATHERSTRIPPING	–	ULTRAFAB/SCHLEGEL
7	Q200 X190	AS REQD.	VENT WEATHERSTRIPPING	–	SCHLEGEL Q-LON
8	–	AS REQD.	VENT SCREWS @ 20" O.C. LONGER SIDES, 18" O.C. SHORTER SIDES	–	#10 X 1" SS SMS
9	–	2/ CORNER	FRAME AND VENT ASSEMBLY SCREWS	–	#10 X 1-1/4" SS SMS

Engr: DR. HUMAYOUN FAROOQ
STRUCTURES
FLA. PE # 16557
C.A.N. 3538

NOV 07 2008

08-11/4.06
Oct. 26, 2013

AL-FAROOQ CORPORATION
ENGINEERS & PRODUCT DEVELOPMENT
1235 S.W. 87 AVE
MIAMI, FLORIDA 33174
TEL. (305) 264-8100 FAX. (305) 262-6978

COMP-ANL\W99-10CGI

SERIES-238 ALUMINUM FIXED WINDOW

CGI WINDOWS & DOORS
10100 N.W. 25TH STREET
DORAL, FL. 33172
TEL. (305) 593-6590 FAX. (305) 593-6592

revisions:

no	date	by	description
D	08.26.06		UPDATED FOR 2004 FBC
E	02.05.08		NO CHANGE THIS SHEET
F	10.07.08		GENERAL REV.

date: 02-19-99
scale: 1/2" = 1"
dr. by: HAMID
chk. by:

drawing no.
W99-10

sheet 3 of 12

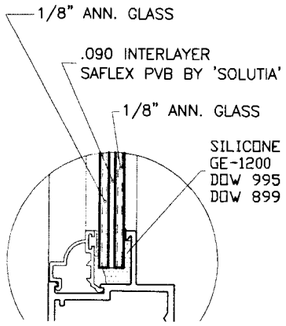

5/16" NOMINAL
GLASS TYPE '2'

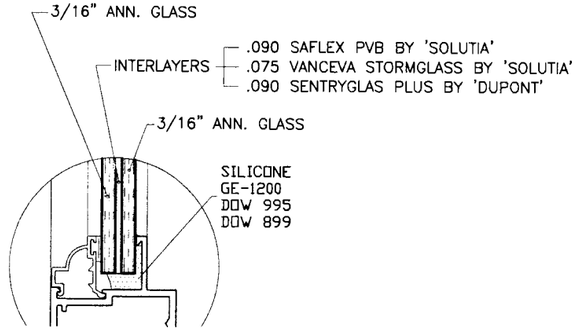

7/16" NOMINAL
GLASS TYPE '3'

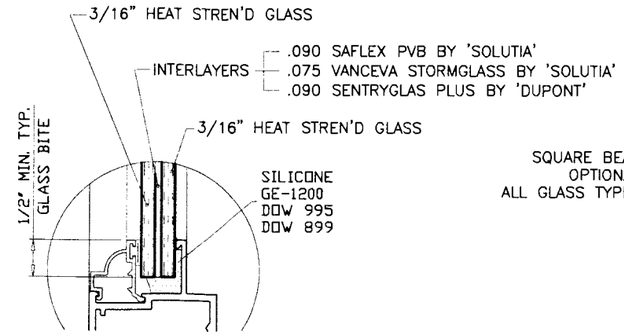

7/16" NOMINAL
GLASS TYPE '6'

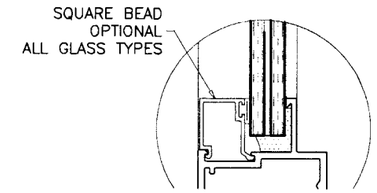

PERFORMANCE VALUES OF IMPACT RESISTANT WINDOWS

REFER TO SHEETS 7 THRU 12 FOR INSTALLATION DETAILS

WINDOW DIMS.		GLASS TYPE '2'		GLASS TYPE '3'		GLASS TYPE '6'	
WIDTH	HEIGHT	EXT. (+)	INT. (−)	EXT. (+)	INT. (−)	EXT. (+)	INT. (−)
19-1/8"	26"	110.0	195.0	110.0	195.0	110.0	195.0
26-1/2"		110.0	166.2	110.0	195.0	110.0	195.0
37"		110.0	166.2	110.0	172.5	110.0	195.0
53-1/8"		110.0	120.0	110.0	148.2	110.0	195.0
19-1/8"	38-3/8"	110.0	195.0	110.0	195.0	110.0	195.0
26-1/2"		110.0	163.0	110.0	167.7	110.0	195.0
37"		110.0	116.8	110.0	151.9	101.8	180.5
53-1/8"		84.1	84.1	108.8	118.7	108.8	118.7
19-1/8"	50-5/8"	110.0	185.7	110.0	187.6	110.0	195.0
26-1/2"		110.0	131.2	110.0	148.7	110.0	195.0
37"		95.0	95.0	110.0	120.0	110.0	120.0
53-1/8"		67.9	67.9	85.3	85.3	85.3	85.3
19-1/8"	63"	110.0	177.5	110.0	179.4	110.0	195.0
26-1/2"		102.7	102.7	110.0	120.0	110.0	120.0
37"		70.5	70.5	102.1	111.3	102.1	111.3
53-1/8"		57.7	57.7	81.3	81.3	81.3	81.3
19-1/8"	74-1/4"	110.0	120.0	110.0	174.6	110.0	195.0
26-1/2"		89.8	89.8	110.0	120.0	110.0	120.0
37"		56.9	56.9	90.0	90.0	90.0	90.0
53-1/8"		–	–	–	–	70.0	70.0

Engr: DR. HUMAYOUN FAROOQ
STRUCTURES
FLA. PE # 16557
C.A.N. 3538

NOV 07 2008

08-1114.06
Oct. 26, 2013

AL-FAROOQ CORPORATION
ENGINEERS & PRODUCT DEVELOPMENT
1235 S.W. 87 AVE
MIAMI, FLORIDA 33174
TEL. (305) 264-8100 FAX. (305) 262-6978
COMP-ANL\W99-10CGI

SERIES-238 ALUMINUM FIXED WINDOW

CGI WINDOWS & DOORS
10100 N.W. 25TH STREET
DORAL, FL. 33172
TEL. (305) 593-6590 FAX. (305) 593-6592

revisions:

no	date	by	description
B	08.09.01		CHARTS REV. PER ASTM E-1300
D	08.26.06		UPDATED FOR 2004 FBC
E	02.05.08		NO CHANGE THIS SHEET
F	10.07.08		GENERAL REV.

date: 02-19-99
scale: 1/2" = 1"
dr. by: HAMID
chk. by:

drawing no.
W99-10

PERFORMANCE VALUES OF IMPACT RESISTANT WINDOWS

REFER TO SHEETS 7 THRU 12 FOR INSTALLATION DETAILS

WINDOW DIMS.		GLASS TYPE '2'		GLASS TYPE '3'		GLASS TYPE '6'	
WIDTH	HEIGHT	EXT. (+)	1NT. (−)	EXT. (+)	1NT. (−)	EXT. (+)	1NT. (−)
24"	36"	110.0	180.0	110.0	181.9	110.0	195.0
30"		110.0	144.0	110.0	166.3	110.0	195.0
36"		110.0	120.0	110.0	161.7	104.7	185.5
42"		110.0	120.0	110.0	120.0	110.0	120.0
48"		104.8	104.8	110.0	120.0	110.0	120.0
54"		88.3	88.3	110.0	120.0	110.0	120.0
57"		81.9	81.9	108.3	118.1	108.3	118.1
60"		76.9	76.9	105.9	115.5	105.9	115.5
63"		72.5	72.5	103.7	113.2	103.7	113.2
66"		68.5	68.5	90.0	90.0	90.0	90.0
69"		64.5	64.5	90.0	90.0	90.0	90.0
72"		60.9	60.9	90.0	90.0	90.0	90.0
75"		57.8	57.8	90.0	90.0	90.0	90.0
78"		55.0	55.0	90.0	90.0	90.0	90.0
81"		50.2	50.2	90.0	90.0	90.0	90.0
84"		48.6	48.6	90.0	90.0	90.0	90.0
87"		47.0	47.0	90.0	90.0	90.0	90.0
24"	42"	110.0	168.0	110.0	169.7	110.0	195.0
30"		110.0	144.0	110.0	150.9	110.0	195.0
36"		110.0	120.0	110.0	120.0	110.0	120.0
42"		102.9	102.9	110.0	120.0	110.0	120.0
48"		87.2	87.2	110.0	120.0	110.0	120.0
54"		76.9	76.9	103.9	113.4	103.9	113.4
57"		72.2	72.2	90.0	90.0	90.0	90.0
60"		67.9	67.9	90.0	90.0	90.0	90.0
63"		63.9	63.9	90.0	90.0	90.0	90.0
66"		60.2	60.2	90.0	90.0	90.0	90.0
69"		55.3	55.3	90.0	90.0	90.0	90.0
72"		52.0	52.0	90.0	90.0	90.0	90.0
75"		49.1	49.1	90.0	90.0	90.0	90.0
78"		46.7	46.7	88.4	88.4	90.0	90.0
81"		44.8	44.8	85.4	85.4	90.0	90.0
84"		–	–	–	–	90.0	90.0
87"		–	–	–	–	70.0	70.0
24"	48"	110.0	160.0	110.0	161.7	110.0	195.0
30"		110.0	120.0	110.0	141.1	108.2	191.8
36"		104.8	104.8	110.0	120.0	110.0	120.0
42"		87.2	87.2	110.0	120.0	110.0	120.0
48"		77.3	77.3	110.0	120.0	110.0	120.0
54"		69.8	69.8	90.0	90.0	90.0	90.0
57"		66.3	66.3	90.0	90.0	90.0	90.0
60"		65.0	65.0	90.0	90.0	90.0	90.0
63"		60.8	60.8	90.0	90.0	90.0	90.0
66"		57.0	57.0	90.0	90.0	90.0	90.0
69"		53.6	53.6	89.6	89.6	90.0	90.0
72"		50.6	50.6	85.5	85.5	90.0	90.0
75"		–	–	–	–	90.0	90.0
78"		–	–	–	–	70.0	70.0
81"		–	–	–	–	70.0	70.0
84"		–	–	–	–	70.0	70.0
87"		–	–	–	–	70.0	70.0
24"	54"	110.0	142.2	110.0	155.9	110.0	195.0
30"		103.3	103.3	110.0	120.0	110.0	120.0
36"		88.3	88.3	110.0	120.0	110.0	120.0
42"		76.9	76.9	103.9	113.4	103.9	113.4
48"		69.8	69.8	90.0	90.0	90.0	90.0
54"		67.4	67.4	80.0	80.0	80.0	80.0
57"		63.7	63.7	80.0	80.0	80.0	80.0
60"		60.2	60.2	80.0	80.0	80.0	80.0
63"		57.1	57.1	80.0	80.0	80.0	80.0
66"		–	–	–	–	80.0	80.0
69"		–	–	–	–	70.0	70.0
72"		–	–	–	–	70.0	70.0
75"		–	–	–	–	70.0	70.0
78"		–	–	–	–	70.0	70.0
81"		–	–	–	–	70.0	70.0
84"		–	–	–	–	70.0	70.0
87"		–	–	–	–	70.0	70.0

PERFORMANCE VALUES OF IMPACT RESISTANT WINDOWS

REFER TO SHEETS 7 THRU 12 FOR INSTALLATION DETAILS

WINDOW DIMS.		GLASS TYPE '2'		GLASS TYPE '3'		GLASS TYPE '6'	
WIDTH	HEIGHT	EXT. (+)	1NT. (−)	EXT. (+)	1NT. (−)	EXT. (+)	1NT. (−)
24"	60"	110.0	120.0	110.0	151.6	110.0	195.0
30"		91.2	91.2	110.0	120.0	110.0	120.0
36"		76.9	76.9	105.9	115.5	105.9	115.5
42"		67.9	67.9	90.0	90.0	90.0	90.0
48"		65.0	65.0	90.0	90.0	90.0	90.0
54"		60.2	60.2	80.0	80.0	80.0	80.0
57"		57.6	57.6	75.8	75.8	75.8	75.8
60"		–	–	–	–	72.0	72.0
63"		–	–	–	–	70.0	70.0
66"		–	–	–	–	70.0	70.0
69"		–	–	–	–	70.0	70.0
72"		–	–	–	–	70.0	70.0
75"		–	–	–	–	70.0	70.0
78"		–	–	–	–	70.0	70.0
81"		–	–	–	–	70.0	70.0
84"		–	–	–	–	70.0	70.0
87"		–	–	–	–	50.0	50.0
24"	66"	110.0	119.6	110.0	120.0	110.0	120.0
30"		81.8	81.8	110.0	120.0	110.0	120.0
36"		68.5	68.5	90.0	90.0	90.0	90.0
42"		60.2	60.2	90.0	90.0	90.0	90.0
48"		57.0	57.0	90.0	90.0	90.0	90.0
54"		–	–	–	–	80.0	80.0
57"		–	–	–	–	70.0	70.0
60"		–	–	–	–	70.0	70.0
63"		–	–	–	–	68.6	68.6
66"		–	–	–	–	65.5	65.5
69"		–	–	–	–	65.5	65.5
72"		–	–	–	–	65.5	65.5
75"		–	–	–	–	65.5	65.5
78"		–	–	–	–	50.0	50.0
81"		–	–	–	–	50.0	50.0
84"		–	–	–	–	50.0	50.0
87"		–	–	–	–	50.0	50.0
24"	72"	110.0	111.5	110.0	120.0	110.0	120.0
30"		77.0	77.0	110.0	120.0	110.0	120.0
36"		60.9	60.9	90.0	90.0	90.0	90.0
42"		52.0	52.0	90.0	90.0	90.0	90.0
48"		50.6	50.6	85.5	85.5	90.0	90.0
54"		–	–	–	–	70.0	70.0
57"		–	–	–	–	70.0	70.0
60"		–	–	–	–	70.0	70.0
63"		–	–	–	–	68.6	68.6
66"		–	–	–	–	65.5	65.5
69"		–	–	–	–	62.6	62.6
72"		–	–	–	–	50.0	50.0
75"		–	–	–	–	50.0	50.0
78"		–	–	–	–	50.0	50.0
81"		–	–	–	–	50.0	50.0
84"		–	–	–	–	50.0	50.0
87"		–	–	–	–	50.0	50.0
24"	78"	108.1	108.1	110.0	120.0	110.0	120.0
30"		70.2	70.2	110.0	120.0	110.0	120.0
36"		55.0	55.0	90.0	90.0	90.0	90.0
42"		46.7	46.7	88.4	88.4	90.0	90.0
48"		–	–	–	–	70.0	70.0
54"		–	–	–	–	70.0	70.0
57"		–	–	–	–	70.0	70.0
60"		–	–	–	–	70.0	70.0
63"		–	–	–	–	68.6	68.6
66"		–	–	–	–	50.0	50.0
69"		–	–	–	–	50.0	50.0
72"		–	–	–	–	50.0	50.0
75"		–	–	–	–	50.0	50.0
78"		–	–	–	–	50.0	50.0
81"		–	–	–	–	50.0	50.0

PERFORMANCE VALUES OF IMPACT RESISTANT WINDOWS

REFER TO SHEETS 7 THRU 12 FOR INSTALLATION DETAILS

WINDOW DIMS.		GLASS TYPE '2'		GLASS TYPE '3'		GLASS TYPE '6'	
WIDTH	HEIGHT	EXT. (+)	1NT. (−)	EXT. (+)	1NT. (−)	EXT. (+)	1NT. (−)
24"	84"	110.0	114.4	110.0	120.0	110.0	120.0
30"		65.7	65.7	90.0	90.0	90.0	90.0
36"		48.6	48.6	90.0	90.0	90.0	90.0
42"		–	–	–	–	90.0	90.0
48"		–	–	–	–	70.0	70.0
54"		–	–	–	–	70.0	70.0
57"		–	–	–	–	70.0	70.0
60"		–	–	–	–	70.0	70.0
63"		–	–	–	–	50.0	50.0
66"		–	–	–	–	50.0	50.0
69"		–	–	–	–	50.0	50.0
72"		–	–	–	–	50.0	50.0
75"		–	–	–	–	50.0	50.0
24"	96"	88.6	88.6	110.0	120.0	110.0	120.0
30"		57.9	57.9	90.0	90.0	90.0	90.0
36"		43.0	43.0	90.0	90.0	90.0	90.0
42"		–	–	–	–	70.0	70.0
48"		–	–	–	–	70.0	70.0
54"		–	–	–	–	50.0	50.0
57"		–	–	–	–	50.0	50.0
60"		–	–	–	–	50.0	50.0
63"		–	–	–	–	50.0	50.0
66"		–	–	–	–	50.0	50.0
24"	108"	70.4	70.4	90.0	90.0	90.0	90.0
30"		56.4	56.4	90.0	90.0	90.0	90.0
36"		–	–	–	–	70.0	70.0
42"		–	–	–	–	70.0	70.0
48"		–	–	–	–	50.0	50.0
54"		–	–	–	–	50.0	50.0
57"		–	–	–	–	50.0	50.0
60"		–	–	–	–	50.0	50.0
24"	120"	59.5	59.5	90.0	90.0	90.0	90.0
30"		–	–	–	–	90.0	90.0
36"		–	–	–	–	70.0	70.0
42"		–	–	–	–	70.0	70.0
48"		–	–	–	–	50.0	50.0
54"		–	–	–	–	50.0	50.0
24"	132"	46.9	46.9	90.0	90.0	90.0	90.0
30"		–	–	–	–	70.0	70.0
36"		–	–	–	–	70.0	70.0
42"		–	–	–	–	50.0	50.0
48"		–	–	–	–	50.0	50.0
24"	144"	41.3	41.3	90.0	90.0	90.0	90.0
30"		–	–	–	–	70.0	70.0
36"		–	–	–	–	50.0	50.0
42"		–	–	–	–	50.0	50.0
24"	156"	–	–	–	–	70.0	70.0
30"		–	–	–	–	70.0	70.0
36"		–	–	–	–	50.0	50.0

NOTE:
LOAD AREA LIMITS
FOR +110, −195 PSF = 10.0 SQ. FT.
+110, −120 PSF = 16.3 SQ. FT.
+90, −90 PSF = 24.0 SQ. FT.
+70, −70 PSF = 35.0 SQ. FT.
+50, −50 PSF = 45.0 SQ. FT.

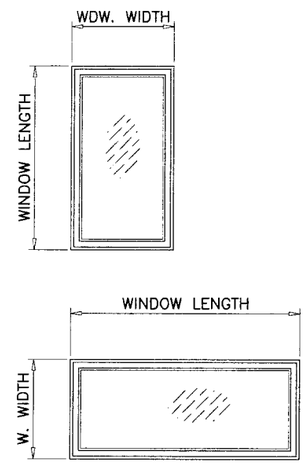

NOTE:
WIDTH AND LENGTH DIMENSIONS CAN BE ORIENTED VERTICALLY OR HORIZONTALLY AS SHOWN ABOVE.

NOTE:
GLASS CAPACITIES ON THIS SHEET ARE BASED ON ASTM E1300-02/04 (3 SEC. GUSTS).

Engr: DR. HUMAYOUN FAROOQ
STRUCTURES
FLA. PE # 16557
C.A.N. 3538

NOV 07 2008

08-1114.06
Oct. 26, 2013
Manuel Perez

AL-FAROOQ CORPORATION
ENGINEERS & PRODUCT DEVELOPMENT
1235 S.W. 87 AVE
MIAMI, FLORIDA 33174
TEL. (305) 264-8100 FAX. (305) 262-6978

COMP-ANL\W99-10CGI

SERIES-238 ALUMINUM FIXED WINDOW

CGI WINDOWS & DOORS
10100 N.W. 25TH STREET
DORAL, FL. 33172
TEL. (305) 593-6590 FAX. (305) 593-6592

revisions:

no	date	by	description
B	08.09.01		CHARTS REV. PER ASTM E-1300
D	08.26.06		UPDATED FOR 2004 FBC
E	02.05.08		NO CHANGE THIS SHEET
F	10.07.08		GENERAL REV.

date: 02-19-99
scale: 1/2" = 1"
dr. by: HAMID
chk. by:

drawing no.
W99-10

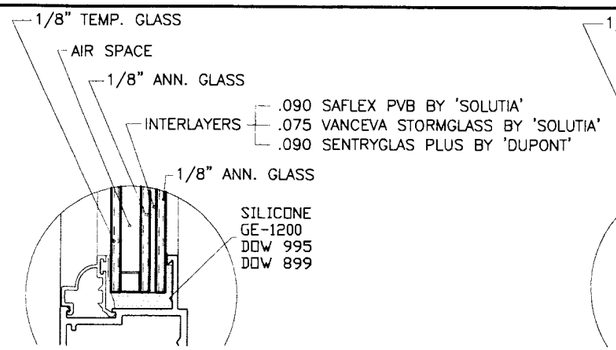

3/4" INSULATED
GLASS TYPE '2A'

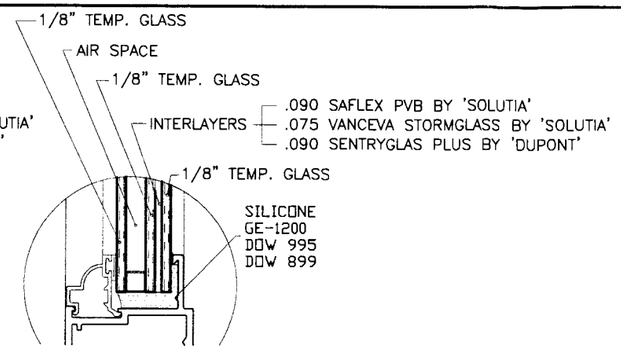

3/4" INSULATED
GLASS TYPE '3A'

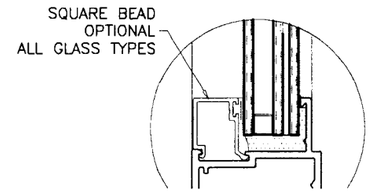

PERFORMANCE VALUES OF IMPACT RESISTANT WINDOWS
REFER TO SHEETS 7 THRU 12 FOR INSTALLATION DETAILS

WINDOW DIMS.		GLASS TYPE '2A'		GLASS TYPE '3A'	
WIDTH	HEIGHT	EXT. (+)	INT. (−)	EXT. (+)	INT. (−)
24"	36"	110.0	180.0	110.0	180.0
30"		110.0	144.0	110.0	144.0
36"		110.0	120.0	110.0	120.0
42"		110.0	120.0	110.0	120.0
48"		110.0	111.3	110.0	120.0
54"		93.8	93.8	110.0	120.0
57"		87.0	87.0	110.0	116.9
60"		81.7	81.7	120.0	114.3
63"		77.0	77.0	120.0	112.0
66"		72.7	72.7	90.0	90.0
69"		68.5	68.5	90.0	90.0
72"		64.7	64.7	90.0	90.0
75"		61.4	61.4	90.0	90.0
78"		58.4	58.4	90.0	90.0
81"		53.4	53.4	90.0	90.0
84"		51.6	51.6	90.0	90.0
87"		49.9	49.9	90.0	90.0
24"	42"	110.0	168.0	110.0	168.0
30"		110.0	144.0	110.0	144.0
36"		110.0	120.0	110.0	120.0
42"		102.9	102.9	96.9	102.9
48"		92.7	92.7	96.9	102.9
54"		81.7	81.7	96.9	102.9
57"		76.7	76.7	90.0	90.0
60"		72.1	72.1	90.0	90.0
63"		67.9	67.9	90.0	90.0
66"		63.9	63.9	90.0	90.0
69"		58.8	58.8	90.0	90.0
72"		55.2	55.2	90.0	90.0
75"		52.2	52.2	90.0	90.0
78"		49.6	49.6	90.0	90.0
81"		47.6	47.6	90.0	90.0
24"	48"	110.0	160.0	110.0	160.0
30"		110.0	120.0	110.0	120.0
36"		110.0	111.3	110.0	120.0
42"		92.7	92.7	96.9	102.9
48"		82.1	82.1	84.8	90.0
54"		74.2	74.2	90.0	90.0
57"		70.4	70.4	90.0	90.0
60"		69.0	69.0	90.0	90.0
63"		64.6	64.6	90.0	90.0
66"		60.5	60.5	90.0	90.0
69"		57.0	57.0	90.0	90.0
72"		53.7	53.7	90.0	90.0

PERFORMANCE VALUES OF IMPACT RESISTANT WINDOWS
REFER TO SHEETS 7 THRU 12 FOR INSTALLATION DETAILS

WINDOW DIMS.		GLASS TYPE '2A'		GLASS TYPE '3A'	
WIDTH	HEIGHT	EXT. (+)	INT. (−)	EXT. (+)	INT. (−)
24"	54"	110.0	151.0	110.0	154.3
30"		109.7	109.7	110.0	120.0
36"		93.8	93.8	110.0	120.0
42"		81.7	81.7	96.9	102.9
48"		74.2	74.2	90.0	90.0
54"		71.6	71.6	80.0	80.0
57"		67.6	67.6	80.0	80.0
60"		64.0	64.0	80.0	80.0
63"		60.6	60.6	80.0	80.0
24"	60"	110.0	120.0	110.0	120.0
30"		96.9	96.9	110.0	120.0
36"		81.7	81.7	110.0	114.3
42"		72.1	72.1	90.0	90.0
48"		69.0	69.0	90.0	90.0
54"		64.0	64.0	80.0	80.0
57"		61.2	61.2	75.8	75.8
24"	66"	110.0	120.0	110.0	120.0
30"		86.9	86.9	110.0	120.0
36"		72.7	72.7	90.0	90.0
42"		63.9	63.9	90.0	90.0
48"		60.5	60.5	90.0	90.0
24"	72"	110.0	118.4	110.0	120.0
30"		81.8	81.8	110.0	120.0
36"		64.7	64.7	90.0	90.0
42"		55.2	55.2	90.0	90.0
48"		53.7	53.7	90.0	90.0
24"	78"	110.0	114.8	110.0	120.0
30"		74.6	74.6	110.0	118.9
36"		58.4	58.4	90.0	90.0
42"		49.6	49.6	90.0	90.0
24"	84"	110.0	120.0	110.0	120.0
30"		69.8	69.8	90.0	90.0
36"		51.6	51.6	90.0	90.0
24"	96"	94.1	94.1	110.0	120.0
30"		61.6	61.6	90.0	90.0
36"		45.6	45.6	90.0	90.0
24"	108"	74.8	74.8	90.0	90.0
30"		59.9	59.9	90.0	90.0
24"	120"	63.2	63.2	90.0	90.0
24"	132"	49.8	49.8	90.0	90.0
24"	144"	43.8	43.8	90.0	90.0

PERFORMANCE VALUES OF IMPACT RESISTANT WINDOWS
REFER TO SHEETS 7 THRU 12 FOR INSTALLATION DETAILS

WINDOW DIMS.		GLASS TYPE '2A'		GLASS TYPE '3A'	
WIDTH	HEIGHT	EXT. (+)	INT. (−)	EXT. (+)	INT. (−)
19−1/8"	26"	110.0	195.0	110.0	195.0
26−1/2"		110.0	166.2	110.0	166.2
37"		110.0	166.2	110.0	166.2
53−1/8"		110.0	120.0	110.0	120.0
19−1/8"	38−3/8"	110.0	195.0	110.0	195.0
26−1/2"		110.0	163.0	110.0	163.0
37"		110.0	116.8	110.0	116.8
53−1/8"		89.3	89.3	110.0	112.6
19−1/8"	50−5/8"	110.0	185.7	110.0	185.7
26−1/2"		110.0	139.4	110.0	147.2
37"		100.9	100.9	110.0	116.8
53−1/8"		72.1	72.1	85.3	85.3
19−1/8"	63"	110.0	177.5	110.0	177.5
26−1/2"		109.1	109.1	110.0	120.0
37"		74.9	74.9	110.0	110.2
53−1/8"		61.3	61.3	81.3	81.3
19−1/8"	74−1/4"	110.0	120.0	110.0	120.0
26−1/2"		95.4	95.4	110.0	120.0
37"		60.4	60.4	90.0	90.0

NOTE:
LOAD AREA LIMITS
FOR +110, −195 PSF = 9.32 SQ. FT.
+110, −120 PSF = 16.2 SQ. FT.
+90, −90 PSF = 24.0 SQ. FT.

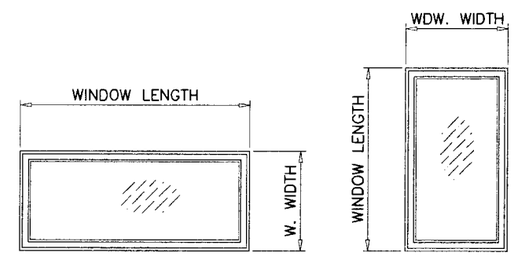

NOTE:
WIDTH AND LENGTH DIMENSIONS CAN BE ORIENTED VERTICALLY OR HORIZONTALLY AS SHOWN ABOVE.

NOTE:
GLASS CAPACITIES ON THIS SHEET ARE BASED ON ASTM E1300−02/04 (3 SEC. GUSTS).

Engr: DR. HUMAYOUN FAROOQ
STRUCTURES
FLA. PE # 16557
C.A.N. 3538

NOV 07 2008

PRODUCT APPROVAL
In accordance with the Florida
Building Code
Accepted as: 08-1114.06
Expiration Date: Oct. 26, 2013
By: Manuel Perez
Notice: Date Product Control
Division

AL-FAROOQ CORPORATION
ENGINEERS & PRODUCT DEVELOPMENT
1235 S.W. 87 AVE
MIAMI, FLORIDA 33174
TEL. (305) 264-8100 FAX. (305) 262-6978

COMP−ANL\W99−10CGI

SERIES−238 ALUMINUM FIXED WINDOW

CGI WINDOWS & DOORS
10100 N.W. 25TH STREET
DORAL, FL. 33172
TEL. (305) 593−6590 FAX. (305) 593−6592

revisions:

no	date	by	description
B	08.09.01		CHARTS REV. PER ASTM E−1300
C	10.04.01		CHART REV. PER BCCO COMMENTS
D	08.26.06		UPDATED FOR 2004 FBC
E	02.05.08		NO CHANGE THIS SHEET
F	10.07.08		GENERAL REV.

date: 02−19−99
scale: 1/2" = 1"
dr. by: HAMID
chk. by:

drawing no.
W99−10

INSTALLATION CONDITIONS FLANGE FRAME (APPLIES TO ALL FOUR SIDES)

FOR ANCHOR PERFORMANCE VALUES SEE SHEETS 9 & 10

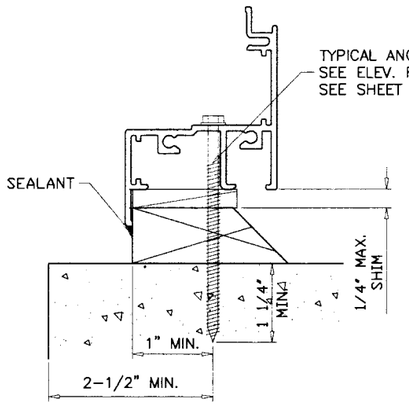

INSTALLATION TYPE '1'

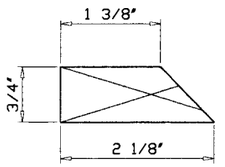

WOOD BUCK TYPE '1'

MATERIAL: PRESSURE TREATED

TYPICAL INSTALLATION DETAIL
ON ALL FOUR SIDES/USING WOOD

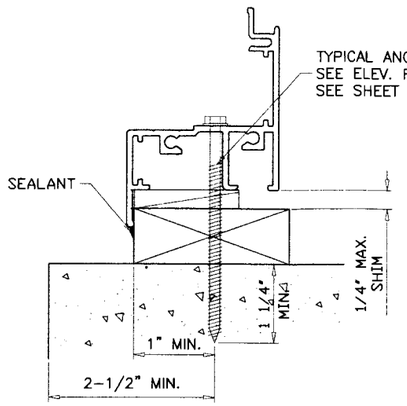

INSTALLATION TYPE '2'

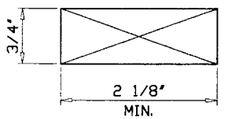

WOOD BUCK TYPE '2'

MATERIAL: PRESSURE TREATED

TYPICAL INSTALLATION DETAIL
ON ALL FOUR SIDES/USING WOOD

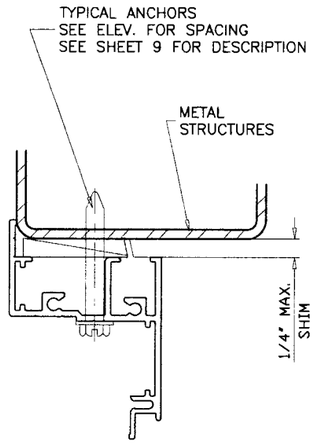

ATTACHMENT TO
METAL STRUCTURES

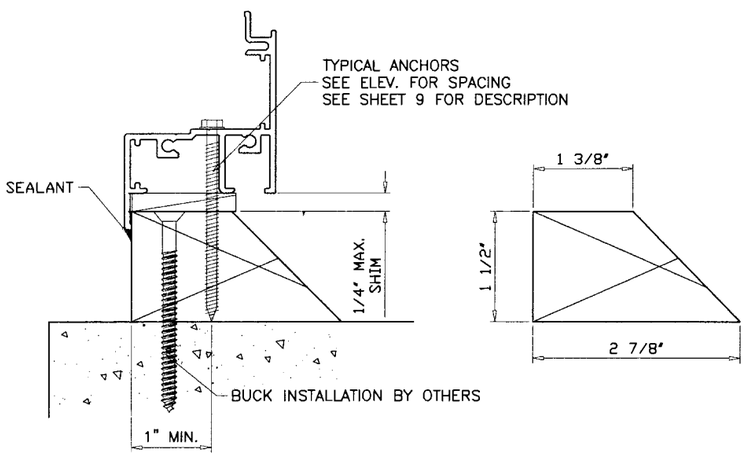

INSTALLATION TYPE '3'

WOOD BUCK TYPE '3'

MATERIAL: PRESSURE TREATED

TYPICAL INSTALLATION DETAIL
ON ALL FOUR SIDES/USING WOOD

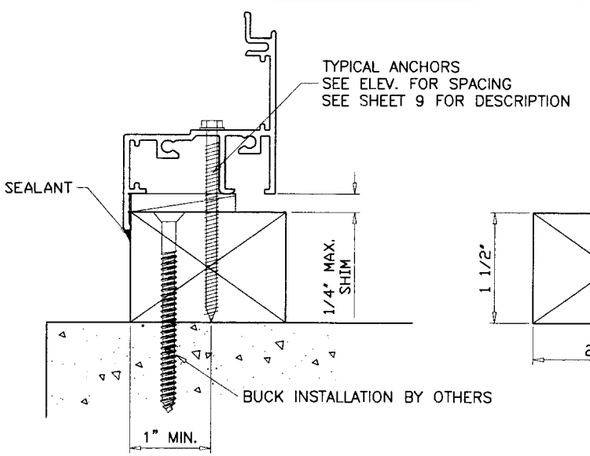

INSTALLATION TYPE '4'

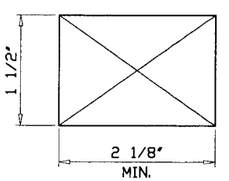

WOOD BUCK TYPE '4'

MATERIAL: PRESSURE TREATED

TYPICAL INSTALLATION DETAIL
ON ALL FOUR SIDES/USING WOOD

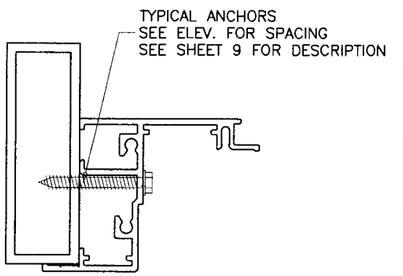

ATTACHMENT TO
APPROVED MULLIONS

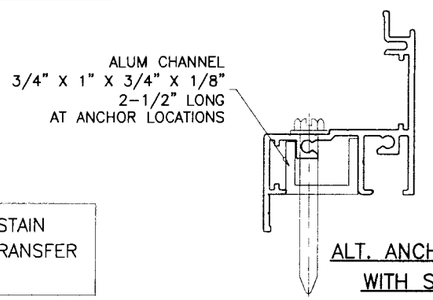

ALT. ANCHOR LOCATION
WITH SHEAR CLIP

WOOD BUCKS NOT BY CGI CORP., MUST SUSTAIN LOADS IMPOSED BY GLAZING SYSTEM AND TRANSFER THEM TO THE BUILDING STRUCTURE.

Engr: DR. HUMAYOUN FARCOQ
STRUCTURES
FLA. PE # 16557
C.A.N. 3538

NOV 07 2008

08-1114.06
Oct. 26, 2013

AL-FAROOQ CORPORATION
ENGINEERS & PRODUCT DEVELOPMENT
1235 S.W. 87 AVE
MIAMI, FLORIDA 33174
TEL. (305) 264-8100 FAX. (305) 262-6978

COMP-ANL\W99-10CGI

SERIES-238 ALUMINUM FIXED WINDOW

CGI WINDOWS & DOORS
10100 N.W. 25TH STREET
DORAL, FL. 33172
TEL. (305) 593-6590 FAX. (305) 593-6592

revisions:

no	date	by	description
B	08.09.01		REVISED
D	08.26.06		UPDATED FOR 2004 FBC
E	02.05.08		NO CHANGE THIS SHEET
F	10.07.08		GENERAL REV.

date: 02-19-99
scale: 1/2" = 1"
dr. by: HAMID
chk. by:

drawing no.
W99-10

INSTALLATION CONDITIONS EQUAL LEG FRAME (APPLIES TO ALL FOUR SIDES)

FOR ANCHOR PERFORMANCE VALUES SEE SHEETS 9 & 10

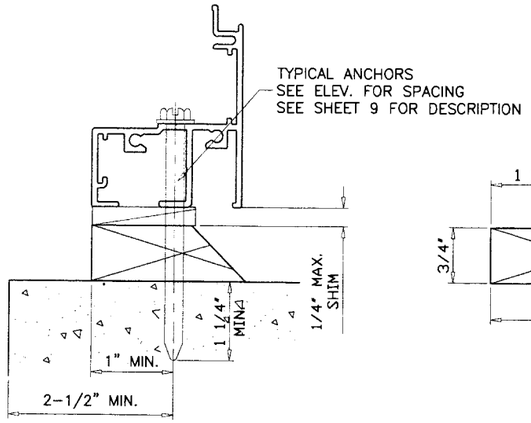

INSTALLATION TYPE '1'

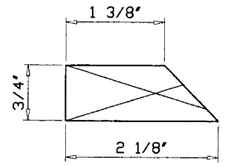

WOOD BUCK TYPE '1'

MATERIAL: PRESSURE TREATED

TYPICAL INSTALLATION DETAIL
ON ALL FOUR SIDES/USING WOOD

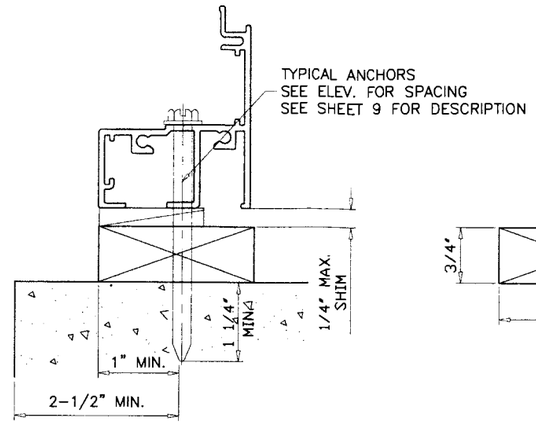

INSTALLATION TYPE '2'

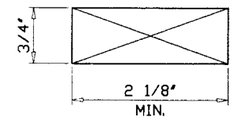

WOOD BUCK TYPE '2'

MATERIAL: PRESSURE TREATED

TYPICAL INSTALLATION DETAIL
ON ALL FOUR SIDES/USING WOOD

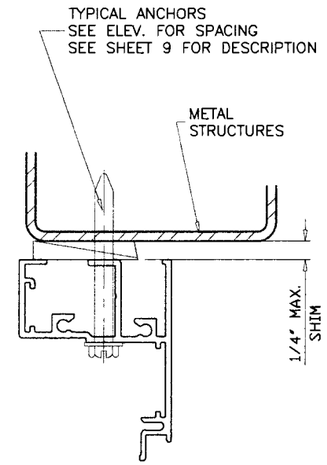

ATTACHMENT TO
METAL STRUCTURES

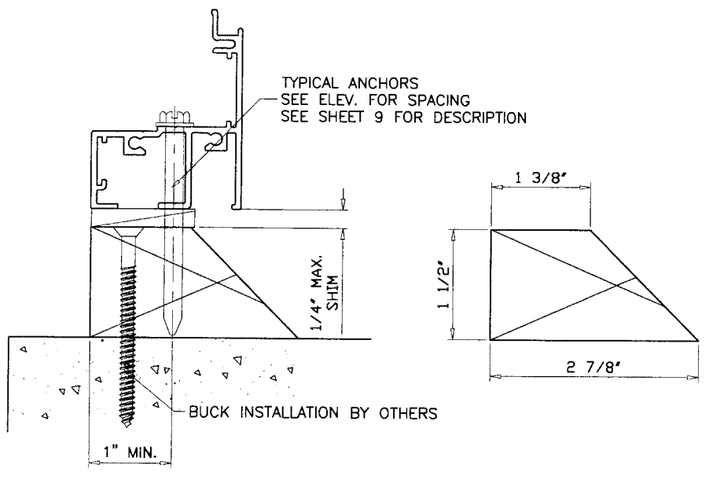

INSTALLATION TYPE '3'

WOOD BUCK TYPE '3'

MATERIAL: PRESSURE TREATED

TYPICAL INSTALLATION DETAIL
ON ALL FOUR SIDES/USING WOOD

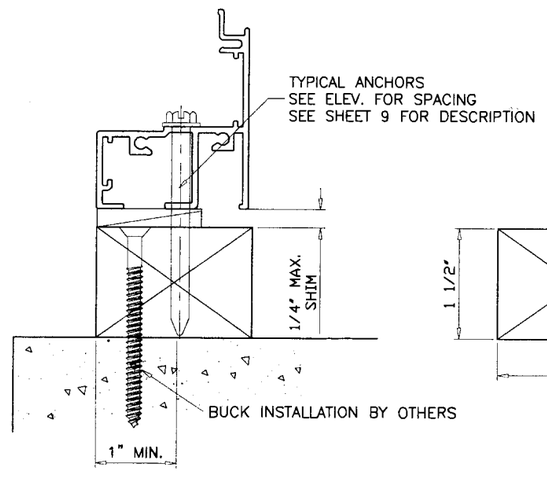

INSTALLATION TYPE '4'

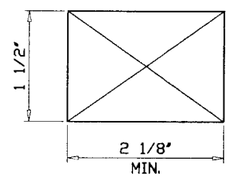

WOOD BUCK TYPE '4'

MATERIAL: PRESSURE TREATED

TYPICAL INSTALLATION DETAIL
ON ALL FOUR SIDES/USING WOOD

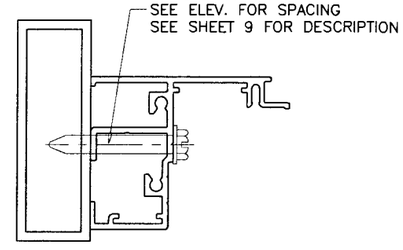

ATTACHMENT TO
APPROVED MULLIONS

WOOD BUCKS NOT BY CGI CORP., MUST SUSTAIN LOADS IMPOSED BY GLAZING SYSTEM AND TRANSFER THEM TO THE BUILDING STRUCTURE.

Engr: DR. HUMAYOUN FAROOQ
STRUCTURES
FLA. PE # 16557
C.A.N. 3538

NOV 07 2008

PRODUCT REVIEWED
as complying with the Florida
Building Code
Acceptance No. 08-1114.06
Expiration Date Oct. 26, 2013
By Manuel Perez
Miami-Dade Product Control
Division

AL-FAROOQ CORPORATION
ENGINEERS & PRODUCT DEVELOPMENT
1235 S.W. 87 AVE
MIAMI, FLORIDA 33174
TEL. (305) 264-8100 FAX. (305) 262-6978
COMP-ANL\W99-10CGI

SERIES-238 ALUMINUM FIXED WINDOW

CGI WINDOWS & DOORS
10100 N.W. 25TH STREET
DORAL, FL. 33172
TEL. (305) 593-6590 FAX. (305) 593-6592

revisions:			
no	date	by	description
F	10.07.08		GENERAL REV.

date: 02-19-99
scale: 1/2" = 1"
dr. by: HAMID
chk. by:

drawing no.
W99-10

PERFORMANCE VALUES OF INSTALLATION ANCHORS REFER TO SHEET 7 & 8 FOR DETAILS			
WINDOW DIMS.		ANCHORS WITHOUT SHEAR CLIP	ANCHORS WITH SHEAR CLIP
WIDTH	HEIGHT	EXT. (+) INT. (−)	EXT. (+) INT. (−)
19−1/8"	26"	195.0	195.0
26−1/2"		195.0	195.0
37"		195.0	195.0
53−1/8"		195.0	176.7
19−1/8"	38−3/8"	195.0	195.0
26−1/2"		195.0	195.0
37"		195.0	188.0
53−1/8"		195.0	141.5
19−1/8"	50−5/8"	195.0	195.0
26−1/2"		195.0	186.1
37"		195.0	155.1
53−1/8"		184.1	130.9
19−1/8"	63"	195.0	180.4
26−1/2"		195.0	139.8
37"		157.4	111.9
53−1/8"		133.9	95.2
19−1/8"	74−1/4"	195.0	186.2
26−1/2"		195.0	142.5
37"		157.1	111.7
53−1/8"		127.9	90.9

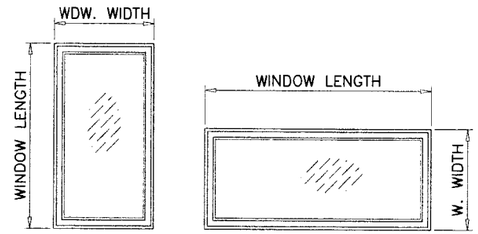

NOTE:
WIDTH AND LENGTH DIMENSIONS CAN BE ORIENTED VERTICALLY OR HORIZONTALLY AS SHOWN ABOVE.
INTERPOLATION BETWEEN SIZES ALLOWED.

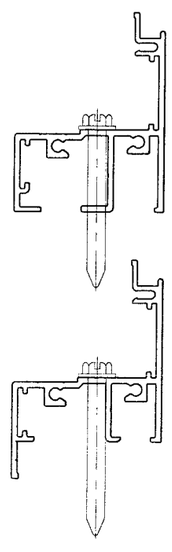

ANCHORS W/O SHEAR CLIP

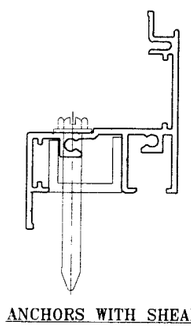

ANCHORS WITH SHEAR CLIP

TYPICAL ANCHORS: SEE ELEV. FOR SPACING

1/4" DIA. KWIK−CON II BY 'HILTI' (Fu=163 KSI, Fy=157 KSI)
1/4" DIA. ULTRACON BY 'ELCO' (Fu=177 KSI, Fy=155 KSI)

INTO 2BY WOOD BUCKS OR WOOD STRUCTURES
1−3/8" MIN. PENETRATION INTO WOOD

THRU 1BY BUCKS INTO CONC. OR MASONRY
1−1/4" MIN. EMBED INTO CONC. OR MASONRY

DIRECTLY INTO CONC. OR MASONRY
1−1/4" MIN. EMBED INTO CONC. OR MASONRY

#14 SMS OR SELF DRILLING SCREWS (GRADE 2 CRS)

INTO MIAMI−DADE COUNTY APPROVED MULLIONS (MIN. THK. = .090")
INTO METAL STRUCTURES

STEEL : 12 GA. MIN. (Fy = 36 KSI MIN.)
ALUMINUM : 1/8" THK. MIN. (6063−T5 MIN.)
(STEEL IN CONTACT WITH ALUMINUM TO BE PLATED OR PAINTED)

TYPICAL EDGE DISTANCE

INTO CONCRETE AND MASONRY = 2−1/2" MIN.
INTO WOOD STRUCTURE = 1" MIN.
INTO METAL STRUCTURE = 3/4" MIN.

CONCRETE f'c = 3000 PSI MIN.
MASONRY f'm = 1500 PSI MIN.

Engr: DR. HUMAYOUN FAROOQ
STRUCTURES
FLA. PE # 16557
C.A.N. 3538

NOV 07 2008

PRODUCT REVISED
as complying with the Florida Building Code
Acceptance No. 08-1114.06
Expiration Date Oct. 26, 2013
By Manuel Perez
Miami Dade Product Control Division

AL-FAROOQ CORPORATION
ENGINEERS & PRODUCT DEVELOPMENT
1235 S.W. 87 AVE
MIAMI, FLORIDA 33174
TEL. (305) 264-8100 FAX. (305) 262-6978
COMP−ANL\W99−10CGI

SERIES−238 ALUMINUM FIXED WINDOW

CGI WINDOWS & DOORS
10100 N.W. 25TH STREET
DORAL, FL. 33172
TEL. (305) 593−6590 FAX. (305) 593−6592

revisions:

no	date	by	description
B	08.09.01		CHARTS REV. PER 1997 NDS
C	10.04.01		ANCHOR REV. PER BCCO COMMENTS
D	08.26.06		UPDATED FOR 2004 FBC
E	02.05.08		NO CHANGE THIS SHEET
F	10.07.08		GENERAL REV.

date: 02−19−99
scale: 1/2" = 1"
dr. by: HAMID
chk. by:

drawing no.
W99−10

PERFORMANCE VALUES OF INSTALLATION ANCHORS

REFER TO SHEETS 7 & 8 FOR DETAILS

WINDOW DIMS.		ANCHORS WITHOUT SHEAR CLIP	ANCHORS WITH SHEAR CLIP
WIDTH	HEIGHT	EXT. (+) INT. (−)	EXT. (+) INT. (−)
24"	36"	195.0	195.0
30"		195.0	195.0
36"		195.0	195.0
42"		195.0	160.0
48"		195.0	170.7
54"		195.0	142.2
57"		184.6	131.3
60"		171.4	121.9
63"		160.0	113.8
66"		187.5	133.3
69"		176.5	125.5
72"		166.7	118.5
75"		157.9	112.3
78"		150.0	106.7
81"		171.4	121.9
84"		163.6	116.4
87"		156.5	111.3
24"	42"	195.0	192.0
30"		195.0	170.7
36"		195.0	160.0
42"		195.0	156.7
48"		195.0	156.7
54"		187.0	133.0
57"		171.4	121.9
60"		158.2	112.5
63"		146.9	104.5
66"		171.4	121.9
69"		160.7	114.3
72"		151.3	107.6
75"		142.9	101.6
78"		135.3	96.2
81"		154.3	109.7
84"		146.9	104.5
87"		140.3	99.7
24"	48"	195.0	195.0
30"		195.0	186.2
36"		195.0	170.7
42"		195.0	156.7
48"		195.0	160.0
54"		180.0	128.0
57"		163.6	116.4
60"		150.0	106.7
63"		138.5	98.5
66"		160.7	114.3
69"		150.0	106.7
72"		140.6	100.0
75"		132.4	94.1
78"		125.0	88.9
81"		142.1	101.1
84"		135.0	96.0
87"		128.6	91.4

PERFORMANCE VALUES OF INSTALLATION ANCHORS

REFER TO SHEETS 7 & 8 FOR DETAILS

WINDOW DIMS.		ANCHORS WITHOUT SHEAR CLIP	ANCHORS WITH SHEAR CLIP
WIDTH	HEIGHT	EXT. (+) INT. (−)	EXT. (+) INT. (−)
24"	54"	195.0	182.9
30"		195.0	157.5
36"		195.0	142.2
42"		187.0	133.0
48"		180.0	128.0
54"		177.8	126.4
57"		160.0	113.8
60"		145.5	103.4
63"		133.3	94.8
66"		153.8	109.4
69"		142.9	101.6
72"		133.3	94.8
75"		125.0	88.9
78"		117.6	83.7
81"		133.3	94.8
84"		126.3	89.8
87"		120.0	85.3
24"	60"	195.0	160.0
30"		192.0	136.5
36"		171.4	121.9
42"		158.2	112.5
48"		150.0	106.7
54"		145.5	103.4
57"		144.4	102.7
60"		144.0	102.4
63"		130.9	93.1
66"		144.0	102.4
69"		138.5	98.5
72"		128.6	91.4
75"		120.0	85.3
78"		112.5	80.0
81"		127.1	90.4
84"		120.0	85.3
87"		113.7	80.8
24"	66"	195.0	177.8
30"		195.0	150.6
36"		187.5	133.3
42"		171.4	121.9
48"		160.7	114.3
54"		153.8	109.4
57"		151.6	107.8
60"		144.0	102.4
63"		130.6	92.9
66"		148.8	105.8
69"		136.4	97.0
72"		125.9	89.5
75"		116.9	83.1
78"		109.1	77.6
81"		122.7	87.3
84"		115.5	82.1
87"		109.1	77.6

PERFORMANCE VALUES OF INSTALLATION ANCHORS

REFER TO SHEETS 7 & 8 FOR DETAILS

WINDOW DIMS.		ANCHORS WITHOUT SHEAR CLIP	ANCHORS WITH SHEAR CLIP
WIDTH	HEIGHT	EXT. (+) INT. (−)	EXT. (+) INT. (−)
24"	72"	195.0	160.0
30"		189.5	134.7
36"		166.7	118.5
42"		151.3	107.6
48"		140.6	100.0
54"		133.3	94.8
57"		130.7	92.9
60"		128.6	91.4
63"		127.0	90.3
66"		125.9	89.5
69"		125.2	89.0
72"		125.0	88.9
75"		115.4	82.1
78"		107.1	76.2
81"		120.0	85.3
84"		112.5	80.0
87"		105.9	75.3
24"	78"	195.0	145.5
30"		171.4	121.9
36"		150.0	106.7
42"		135.3	96.2
48"		125.0	88.9
54"		117.6	83.7
57"		114.8	81.7
60"		112.5	80.0
63"		110.6	78.6
66"		109.1	77.6
69"		107.9	76.8
72"		107.1	76.2
75"		106.7	75.9
78"		106.5	75.7
81"		106.5	75.7
24"	84"	195.0	160.0
30"		187.8	133.6
36"		163.6	116.4
42"		146.9	104.5
48"		135.0	96.0
54"		126.3	89.8
57"		122.9	87.4
60"		120.0	85.3
63"		117.6	83.6
66"		115.5	82.1
69"		113.8	80.9
72"		112.5	80.0
75"		111.5	79.3

PERFORMANCE VALUES OF INSTALLATION ANCHORS

REFER TO SHEETS 7 & 8 FOR DETAILS

WINDOW DIMS.		ANCHORS WITHOUT SHEAR CLIP	ANCHORS WITH SHEAR CLIP
WIDTH	HEIGHT	EXT. (+) INT. (−)	EXT. (+) INT. (−)
24"	96"	192.9	137.1
30"		160.0	113.8
36"		138.5	98.5
42"		123.4	87.8
48"		112.5	80.0
54"		104.3	74.2
57"		101.1	71.9
60"		98.2	69.8
63"		95.7	68.0
66"		93.5	66.5
24"	108"	195.0	140.0
30"		162.6	115.6
36"		140.0	99.6
42"		124.1	88.3
48"		112.5	80.0
54"		103.7	73.7
57"		100.1	71.2
60"		96.9	68.9
24"	120"	195.0	142.2
30"		164.6	117.0
36"		141.2	100.4
42"		124.7	88.7
48"		112.5	80.0
54"		103.2	73.4
24"	132"	195.0	144.0
30"		166.2	118.2
36"		142.1	101.1
42"		125.1	89.0
48"		112.5	80.0
24"	144"	184.1	130.9
30"		150.7	107.2
36"		128.6	91.4
42"		112.9	80.3
24"	156"	187.5	133.3
30"		153.2	108.9
36"		130.4	92.8

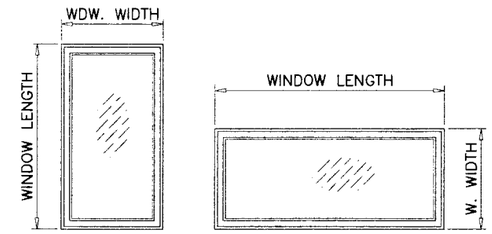

NOTE:
WIDTH AND LENGTH DIMENSIONS CAN BE ORIENTED VERTICALLY OR HORIZONTALLY AS SHOWN ABOVE. INTERPOLATION BETWEEN SIZES ALLOWED.

Engr: DR. HUMAYOUN FAROOQ
STRUCTURES
FLA. PE # 16557
C.A.N. 3538

NOV 07 2008

PRODUCT REVISED
as complying with the Florida
Building Code
Acceptance No. 08-1114.06
Expiration Date Oct. 26, 2013
By
Miami-Dade Product Control
Division

AL-FAROOQ CORPORATION
ENGINEERS & PRODUCT DEVELOPMENT
1235 S.W. 87 AVE
MIAMI, FLORIDA 33174
TEL. (305) 264-8100 FAX. (305) 262-6978

COMP-ANL\W99-10CGI

SERIES-238 ALUMINUM FIXED WINDOW

CGI WINDOWS & DOORS
10100 N.W. 25TH STREET
DORAL, FL. 33172
TEL. (305) 593-6590 FAX. (305) 593-6592

revisions:

no	date	by	description
B	08.09.01		CHARTS REV. PER 1997 NDS
C	10.04.01		ANCHOR REV. PER BCCO COMMENTS
D	08.26.06		UPDATED FOR 2004 FBC
E	02.05.08		NO CHANGE THIS SHEET
F	10.07.08		GENERAL REV.

date: 02-19-99
scale: 1/2" = 1"
dr. by: HAMID
chk. by:

drawing no.
W99-10

PERFORMANCE VALUES ALUM BUCK INSTALLATION ANCHORS		
WINDOW DIMS.		ANCHORS AT 17" O.C.
WIDTH	HEIGHT	EXT. (+) INT. (−)
24"	36"	195.0
30"		195.0
36"		195.0
42"		176.0
48"		187.7
54"		156.4
57"		144.4
60"		134.1
63"		125.2
66"		146.7
69"		138.0
72"		130.4
75"		123.5
78"		117.3
81"		134.1
84"		128.0
87"		122.4
24"	42"	195.0
30"		187.7
36"		176.0
42"		172.4
48"		172.4
54"		146.3
57"		134.1
60"		123.8
63"		114.9
66"		134.1
69"		125.7
72"		118.3
75"		111.7
78"		105.9
81"		120.7
84"		114.9
87"		109.7
24"	48"	195.0
30"		195.0
36"		187.7
42"		172.4
48"		176.0
54"		140.8
57"		128.0
60"		117.3
63"		108.3
66"		125.7
69"		117.3
72"		110.0
75"		103.5
78"		97.8
81"		111.2
84"		105.6
87"		100.6

PERFORMANCE VALUES ALUM BUCK INSTALLATION ANCHORS		
WINDOW DIMS.		ANCHORS AT 17" O.C.
WIDTH	HEIGHT	EXT. (+) INT. (−)
24"	54"	195.0
30"		173.3
36"		156.4
42"		146.3
48"		140.8
54"		139.1
57"		125.2
60"		113.8
63"		104.3
66"		120.3
69"		111.7
72"		104.3
75"		97.8
78"		92.0
81"		104.3
84"		98.8
87"		93.9
24"	60"	176.0
30"		150.2
36"		134.1
42"		123.8
48"		117.3
54"		113.8
57"		112.9
60"		112.6
63"		102.4
66"		112.6
69"		108.3
72"		100.6
75"		93.9
78"		88.0
81"		99.4
84"		93.9
87"		88.9
24"	66"	195.0
30"		165.6
36"		146.7
42"		134.1
48"		125.7
54"		120.3
57"		118.6
60"		112.6
63"		102.2
66"		116.4
69"		106.7
72"		98.5
75"		91.4
78"		85.3
81"		96.0
84"		90.4
87"		85.3

PERFORMANCE VALUES ALUM BUCK INSTALLATION ANCHORS		
WINDOW DIMS.		ANCHORS AT 17" O.C.
WIDTH	HEIGHT	EXT. (+) INT. (−)
24"	72"	176.0
30"		148.2
36"		130.4
42"		118.3
48"		110.0
54"		104.3
57"		102.2
60"		100.6
63"		99.3
66"		98.5
69"		97.9
72"		97.8
75"		90.3
78"		83.8
81"		93.9
84"		88.0
87"		82.8
24"	78"	160.0
30"		134.1
36"		117.3
42"		105.9
48"		97.8
54"		92.0
57"		89.8
60"		88.0
63"		86.5
66"		85.3
69"		84.4
72"		83.8
75"		83.4
78"		83.3
81"		83.3
24"	84"	176.0
30"		146.9
36"		128.0
42"		114.9
48"		105.6
54"		98.8
57"		96.1
60"		93.9
63"		92.0
66"		90.4
69"		89.0
72"		88.0
75"		87.2

PERFORMANCE VALUES ALUM BUCK INSTALLATION ANCHORS		
WINDOW DIMS.		ANCHORS AT 17" O.C.
WIDTH	HEIGHT	EXT. (+) INT. (−)
24"	96"	150.9
30"		125.2
36"		108.3
42"		96.5
48"		88.0
54"		81.6
57"		79.0
60"		76.8
63"		74.8
66"		73.1
24"	108"	154.0
30"		127.2
36"		109.5
42"		97.1
48"		88.0
54"		81.1
57"		78.3
60"		75.8
24"	120"	156.4
30"		128.7
36"		110.4
42"		97.5
48"		88.0
54"		80.7
24"	132"	158.4
30"		130.0
36"		111.2
42"		97.9
48"		88.0
24"	144"	144.0
30"		117.9
36"		100.6
42"		88.3
24"	156"	146.7
30"		119.8
36"		102.0

PERFORMANCE VALUES ALUM BUCK INSTALLATION ANCHORS		
WINDOW DIMS.		ANCHORS AT 17" O.C.
WIDTH	HEIGHT	EXT. (+) INT. (−)
19−1/8"	26"	195.0
26−1/2"		195.0
37"		195.0
53−1/8"		194.3
19−1/8"	38−3/8"	195.0
26−1/2"		195.0
37"		195.0
53−1/8"		155.7
19−1/8"	50−5/8"	195.0
26−1/2"		195.0
37"		170.6
53−1/8"		144.0
19−1/8"	63"	195.0
26−1/2"		153.8
37"		123.1
53−1/8"		104.7
19−1/8"	74−1/4"	195.0
26−1/2"		156.8
37"		122.9
53−1/8"		100.0

NOTE:
INTERPOLATION BETWEEN SIZES ALLOWED.

ALUMINUM BUCK FRAMING DETAIL

REFER TO SHEETS 4 THRU 6 FOR WINDOW CAPACITIES
USE LOWER APPLICABLE VALUES.

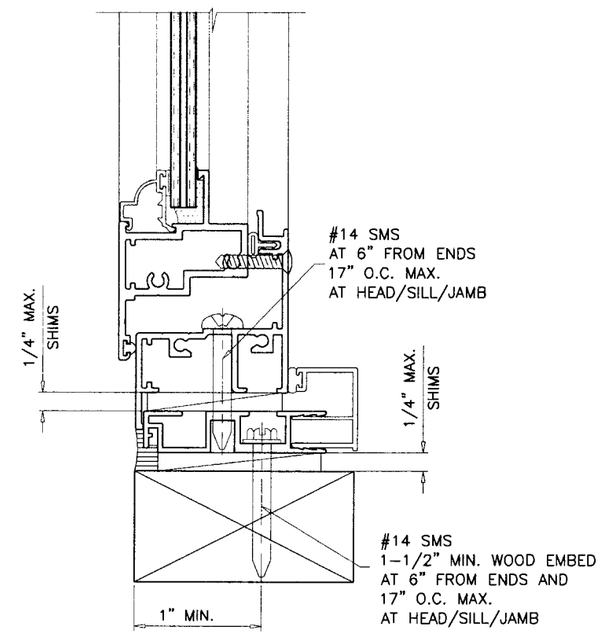

INSTALLATION TYPE '5'
2BY WOOD BUCK OR WOOD STRUCTURES

TYPICAL INSTALLATION DETAIL
ON ALL FOUR SIDES/USING ALUMINUM BUCK SYSTEM

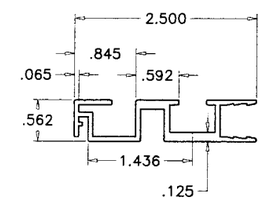

ALUMINUM BUCK
6063−T6

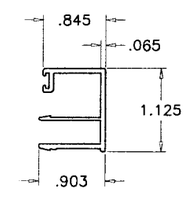

OPTIONAL COVER
6063−T6

Engr: DR. HUMAYOUN FAROOQ
STRUCTURES
FLA. PE # 16557
C.A.N. 3538

NOV 07 2008

PRODUCT REVIEWED
is complying with the Florida
Building Code
Acceptance No. 08-1114.06
Expiration Date Oct. 26, 2013
By Manuel Perez
Miami-Dade Product Control
Division

AL-FAROOQ CORPORATION
ENGINEERS & PRODUCT DEVELOPMENT
1235 S.W. 87 AVE
MIAMI, FLORIDA 33174
TEL. (305) 264-8100 FAX. (305) 262-6978

COMP−ANL\W99−10CGI

SERIES−238 ALUMINUM FIXED WINDOW

CGI WINDOWS & DOORS
10100 N.W. 25TH STREET
DORAL, FL. 33172
TEL. (305) 593-6590 FAX. (305) 593-6592

revisions:

no	date	by	description
E	02.05.08		ALUM BUCK ADDED
F	10.07.08		GENERAL REV.

date: 02-19-99
scale: 1/2" = 1"
dr. by: HAMID
chk. by:

drawing no.
W99−10

PERFORMANCE VALUES OF ALUM BUCK INSTALLATION ANCHORS			
WINDOW DIMS.		ANCHORS AT 17" O.C.	ANCHORS AT 10" O.C.
WIDTH	HEIGHT	EXT. (+) INT. (−)	EXT. (+) INT. (−)
24"	36"	169.5	195.0
30"		155.0	195.0
36"		150.7	195.0
42"		113.0	150.7
48"		120.5	150.7
54"		100.4	150.7
57"		92.7	139.1
60"		86.1	129.1
63"		80.4	140.6
66"		94.2	131.8
69"		88.6	124.1
72"		83.7	117.2
75"		79.3	126.9
78"		75.3	120.5
81"		86.1	114.8
84"		82.2	123.3
87"		78.6	117.9
24"	42"	135.6	180.8
30"		120.5	160.7
36"		113.0	150.7
42"		110.7	147.6
48"		110.7	143.5
54"		93.9	140.9
57"		86.1	129.1
60"		79.5	119.2
63"		73.8	129.1
66"		86.1	120.5
69"		80.7	113.0
72"		76.0	106.4
75"		71.7	114.8
78"		68.0	108.8
81"		77.5	103.3
84"		73.8	110.7
87"		70.4	105.7
24"	48"	150.7	188.3
30"		131.5	164.4
36"		120.5	150.7
42"		110.7	143.5
48"		113.0	141.3
54"		90.4	135.6
57"		82.2	123.3
60"		75.3	113.0
63"		69.5	121.7
66"		80.7	113.0
69"		75.3	105.5
72"		70.6	98.9
75"		66.5	106.4
78"		62.8	100.4
81"		71.4	95.2
84"		67.8	101.7
87"		64.6	96.9

PERFORMANCE VALUES OF ALUM BUCK INSTALLATION ANCHORS			
WINDOW DIMS.		ANCHORS AT 17" O.C.	ANCHORS AT 10" O.C.
WIDTH	HEIGHT	EXT. (+) INT. (−)	EXT. (+) INT. (−)
24"	54"	129.1	193.7
30"		111.3	166.9
36"		100.4	150.7
42"		93.9	140.9
48"		90.4	135.6
54"		89.3	133.9
57"		80.4	120.5
60"		73.1	109.6
63"		67.0	117.2
66"		77.3	108.2
69"		71.7	100.4
72"		67.0	93.7
75"		62.8	100.4
78"		59.1	94.5
81"		67.0	89.3
84"		63.4	95.2
87"		60.3	90.4
24"	60"	113.0	169.5
30"		96.4	144.6
36"		86.1	129.1
42"		79.5	119.2
48"		75.3	113.0
54"		73.1	109.6
57"		72.5	108.8
60"		72.3	108.5
63"		65.7	108.5
66"		72.3	105.5
69"		69.5	97.4
72"		64.6	90.4
75"		60.3	96.4
78"		56.5	90.4
81"		63.8	85.1
84"		60.3	90.4
87"		57.1	85.6
24"	66"	125.6	175.8
30"		106.4	148.9
36"		94.2	131.8
42"		86.1	120.5
48"		80.7	113.0
54"		77.3	108.2
57"		76.1	106.6
60"		72.3	105.5
63"		65.6	104.8
66"		74.7	104.6
69"		68.5	95.9
72"		63.2	88.5
75"		58.7	93.9
78"		54.8	87.7
81"		61.6	82.2
84"		58.0	87.0
87"		54.8	82.2

PERFORMANCE VALUES OF ALUM BUCK INSTALLATION ANCHORS			
WINDOW DIMS.		ANCHORS AT 17" O.C.	ANCHORS AT 10" O.C.
WIDTH	HEIGHT	EXT. (+) INT. (−)	EXT. (+) INT. (−)
24"	72"	113.0	158.2
30"		95.2	133.2
36"		83.7	117.2
42"		76.0	106.4
48"		70.6	98.9
54"		67.0	93.7
57"		65.6	91.9
60"		64.6	90.4
63"		63.8	89.3
66"		63.2	88.5
69"		62.9	88.0
72"		62.8	87.9
75"		57.9	87.9
78"		53.8	86.1
81"		60.3	80.4
84"		56.5	84.8
87"		53.2	79.8
24"	78"	102.7	164.4
30"		86.1	137.8
36"		75.3	120.5
42"		68.0	108.8
48"		62.8	100.4
54"		59.1	94.5
57"		57.7	92.3
60"		56.5	90.4
63"		55.5	88.9
66"		54.8	87.7
69"		54.2	86.7
72"		53.8	86.1
75"		53.6	85.7
78"		53.5	85.6
81"		53.5	79.5
24"	84"	113.0	169.5
30"		94.3	141.5
36"		82.2	123.3
42"		73.8	110.7
48"		67.8	101.7
54"		63.4	95.2
57"		61.7	92.6
60"		60.3	90.4
63"		59.0	88.6
66"		58.0	87.0
69"		57.2	85.8
72"		56.5	84.8
75"		56.0	84.0

PERFORMANCE VALUES OF ALUM BUCK INSTALLATION ANCHORS			
WINDOW DIMS.		ANCHORS AT 17" O.C.	ANCHORS AT 10" O.C.
WIDTH	HEIGHT	EXT. (+) INT. (−)	EXT. (+) INT. (−)
24"	96"	96.9	161.4
30"		80.4	133.9
36"		69.5	115.9
42"		62.0	103.3
48"		56.5	94.2
54"		52.4	87.3
57"		50.8	84.6
60"		49.3	82.2
63"		48.1	80.1
66"		47.0	78.3
24"	108"	98.9	155.4
30"		81.7	128.3
36"		70.3	110.5
42"		62.3	98.0
48"		56.5	88.8
54"		52.1	81.8
57"		50.3	79.0
60"		48.7	76.5
24"	120"	100.4	150.7
30"		82.7	124.0
36"		70.9	106.4
42"		62.6	93.9
48"		56.5	84.8
54"		51.8	77.8
24"	132"	101.7	146.9
30"		83.4	120.5
36"		71.4	103.1
42"		62.8	90.7
48"		56.5	81.6
24"	144"	92.5	154.1
30"		75.7	126.1
36"		64.6	107.6
42"		56.7	94.5
24"	156"	94.2	150.7
30"		76.9	123.1
36"		65.5	104.8

PERFORMANCE VALUES OF ALUM BUCK INSTALLATION ANCHORS			
WINDOW DIMS.		ANCHORS AT 17" O.C.	ANCHORS AT 10" O.C.
WIDTH	HEIGHT	EXT. (+) INT. (−)	EXT. (+) INT. (−)
19-1/8"	26"	195.0	195.0
26-1/2"		185.4	195.0
37"		156.5	195.0
53-1/8"		124.8	187.2
19-1/8"	38-3/8"	177.2	195.0
26-1/2"		146.6	195.5
37"		132.8	177.0
53-1/8"		100.0	149.9
19-1/8"	50-5/8"	165.8	195.0
26-1/2"		131.4	164.3
37"		109.5	136.9
53-1/8"		92.5	127.0
19-1/8"	63"	127.4	195.0
26-1/2"		98.7	172.8
37"		79.1	138.4
53-1/8"		67.2	117.7
19-1/8"	74-1/4"	131.5	195.0
26-1/2"		100.7	161.1
37"		78.9	126.2
53-1/8"		64.2	102.8

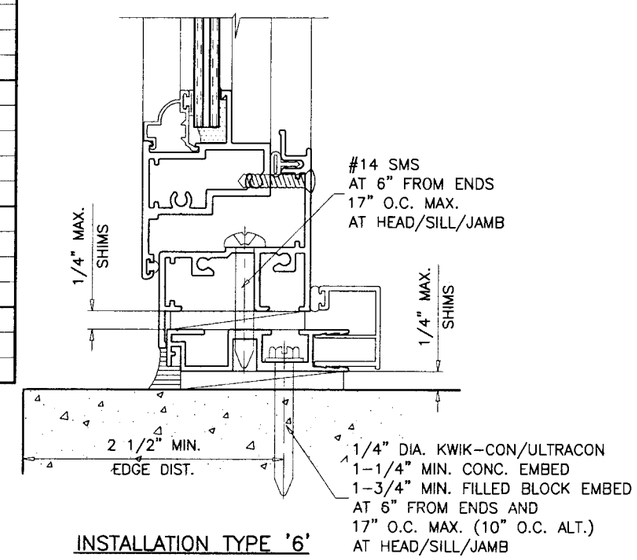

INSTALLATION TYPE '6'

TYPICAL INSTALLATION DETAIL
ON ALL FOUR SIDES/USING ALUMINUM BUCK SYSTEM

NOTE:
INTERPOLATION BETWEEN SIZES ALLOWED.

Engr: DR. HUMAYOUN FAROOQ
STRUCTURES
FLA. PE # 16557
C.A.N. 3538

NOV 07 2008

PRODUCT REVISED
as complying with the Florida
Building Code
Acceptance No. 08-1114.06
Expiration Date Oct. 26, 2013
By Manuel Perez
Miami-Dade Product Control
Division

ALUMINUM BUCK FRAMING DETAIL

REFER TO SHEETS 4 THRU 6 FOR WINDOW CAPACITIES
USE LOWER APPLICABLE VALUES.

AL-FAROOQ CORPORATION
ENGINEERS & PRODUCT DEVELOPMENT
1235 S.W. 87 AVE
MIAMI, FLORIDA 33174
TEL. (305) 264-8100 FAX. (305) 262-6978

COMP-ANL\W99-10CGI

SERIES-238 ALUMINUM FIXED WINDOW

CGI WINDOWS & DOORS
10100 N.W. 25TH STREET
DORAL, FL. 33172
TEL. (305) 593-6590 FAX. (305) 593-6592

revisions:

no	date	by	description
E	02.05.08		ALUM BUCK ADDED
F	10.07.08		GENERAL REV.

date: 02-19-99
scale: 1/2" = 1"
dr. by: HAMID
chk. by:

drawing no.
W99-10