MIAMI-DADE COUNTY
BUILDING CODE COMPLIANCE OFFICE (BCCO)
PRODUCT CONTROL DIVISION

MIAMI-DADE COUNTY, FLORIDA
METRO-DADE FLAGLER BUILDING
140 WEST FLAGLER STREET, SUITE 1603
MIAMI, FLORIDA 33130-1563
(305) 375-2901 FAX (305) 375-2908
www.miamidade.gov/buildingcode

NOTICE OF ACCEPTANCE (NOA)

Nan Ya Plastics Corporation USA
8989 North Loop East, Suite 800
Houston, TX 77029

SCOPE:

This NOA is being issued under the applicable rules and regulations governing the use of construction materials. The documentation submitted has been reviewed by Miami-Dade County Product Control Division and accepted by the Board of Rules and Appeals (BORA) to be used in Miami Dade County and other areas where allowed by the Authority Having Jurisdiction (AHJ).

This NOA shall not be valid after the expiration date stated below. The Miami-Dade County Product Control Division (In Miami Dade County) and/or the AHJ (in areas other than Miami Dade County) reserve the right to have this product or material tested for quality assurance purposes. If this product or material fails to perform in the accepted manner, the manufacturer will incur the expense of such testing and the AHJ may immediately revoke, modify, or suspend the use of such product or material within their jurisdiction. BORA reserves the right to revoke this acceptance, if it is determined by Miami-Dade County Product Control Division that this product or material fails to meet the requirements of the applicable building code.

This product is approved as described herein, and has been designed to comply with the Florida Building Code, including the High Velocity Hurricane Zone.

DESCRIPTION: Nan Ya Series Twin Mulled Fiberglass Fixed Panels–LMI

Limitation: 1. The system is approved with .090" Solutia PVB interlayer.
2. Rail item #16 must be full panel width & stiles item # 17 must be full panel length
3. The 5/16" ITW Tapcon at mullion clip at head/Sill must have min edge distance = 3-1/8" into min 3192 psi compressive strength concrete.

APPROVAL DOCUMENT: Drawing No. **NAN0016**, titled "Impact Twin Mulled Fixed Lite Panels", sheets 1 through 7 of 7, dated 11/07/08 and lat revised on 03-05-09, prepared by PTC, LLC, signed and sealed by Paul E. Winter, P.E., bearing the Miami-Dade County Product Control Approval stamp with the Notice of Acceptance number and approval date by the Miami-Dade County Product Control Division.

MISSILE IMPACT RATING: Large and Small Missile Impact Resistant

LABELING: Each unit shall bear a permanent label with the manufacturer's name or logo, city, state and following statement: "Miami-Dade County Product Control Approved", unless otherwise noted herein.

RENEWAL of this NOA shall be considered after a renewal application has been filed and there has been no change in the applicable building code negatively affecting the performance of this product.

TERMINATION of this NOA will occur after the expiration date or if there has been a revision or change in the materials, use, and/or manufacture of the product or process. Misuse of this NOA as an endorsement of any product, for sales, advertising or any other purposes shall automatically terminate this NOA. Failure to comply with any section of this NOA shall be cause for termination and removal of NOA.

ADVERTISEMENT: The NOA number preceded by the words Miami-Dade County, Florida, and followed by the expiration date may be displayed in advertising literature. If any portion of the NOA is displayed, then it shall be done in its entirety.

INSPECTION: A copy of this entire NOA shall be provided to the user by the manufacturer or its distributors and shall be available for inspection at the job site at the request of the Building Official.
This NOA consists of this page 1 and evidence page E-1 and E-2, as well as approval document mentioned above.
The submitted documentation was reviewed by **Ishaq I. Chanda, P.E.**

MIAMI-DADE COUNTY APPROVED

4/7/19

Nan Ya Plastics Corporation USA

NOTICE OF ACCEPTANCE: EVIDENCE SUBMITTED

A. DRAWINGS

1. Manufacturer's die drawings and sections.
2. Drawing No. **NAN0016**, titled "Impact Twin Mulled Fixed Lite Panels", sheets 1 through 7 of 7, dated 11/07/08 and lat revised on 03-05-09, prepared by PTC, LLC, signed and sealed by Paul E. Winter, P.E.

B. TESTS

1. Test reports on 1) Air Infiltration Test, per FBC, TAS 202-94
   2) Uniform Static Air Pressure Test, Loading per FBC TAS 202-94
   3) Water Resistance Test, per FBC, TAS 202-94
   4) Large Missile Impact Test per FBC, TAS 201-94
   5) Cyclic Wind Pressure Loading per FBC, TAS 203-94
   6) Forced Entry Test, per FBC, TAS 202-94

   along with marked-up drawings and installation diagram of Fiberglass mulled Fixed panels (O-O) and Fixed sidelite w/ Doors (O-XXX), prepared by Certified Testing Laboratories, Test Report No(s). CTLA 1780W-1 dated 03/06/08 and CTLA 1780W-2, dated 03/06/08 respectively, both signed and sealed by Ramesh Patel, P.E.
   Note: The above test report has been revised by an addendum issued by Certified Testing Lab on 02/25/09, signed & sealed by Ramesh Patel, P.E.

C. CALCULATIONS

1. Anchor verification calculations and structural analysis, prepared by PTC Engineering, Inc., dated 03/05/09, signed and sealed by Paul E. Winter, P.E.
2. Successor Engineer's letter dated 03/03/09, prepared, signed and sealed by Paul E. Winter, P.E.
3. Anchor verification calculations and structural analysis, prepared by PTC Engineering, Inc., dated 4/21/08, signed and sealed by Douglas J. McDougall, P.E.

D. QUALITY ASSURANCE

1. Miami Dade Building Code Compliance Office (BCCO).

E. MATERIAL CERTIFICATIONS

1. Test report No.ETC-05-255-16776.1, prepared by ETC Laboratories, dated 07/06/06, issued to Nan Ya Plastics Corp., for their SMC Fiberglass material / ETC05033 per ASTMD-638-03 *"4500 exposed Xenon Arch"*& tensile strength ASTMD-638-03 "*Tensile strength*", *Smoke density* per ASTMD2843-99, *Rate of burning* per ASTMD-635-98 and "*Self ignition*" per ASTMD1929-01, all signed and sealed by Joseph Labora Doldan, P.E.
2. Test report No.ETC-05-255-17144.0, prepared by ETC Laboratories, dated 07/03/08, issued to Nan Ya Plastics Corp., for their Rigid PVC plastic(part #ETC06024) per ASTM D1929-96 *"Standard Test Method for Ignition Properties of Plastics"*, ASTM D2843-99 *"Standard Test Method for Density of Smoke from the Burning or Decomposition of Plastics"*, ASTM D635-98 *"Standard Test Method for Rate of Burning and/or Extent and Time of Burning of Self-Supporting Plastics in a Horizontal Position"* and ASTM D638-03 "Standard Test Methods for Tensile Properties of Plastics" for exposed & unexposed sample per Xenon Arch after 4500 Hours, signed and sealed by Joseph Labora Doldan, P.E.

Ishaq I. Chanda

Ishaq I. Chanda, P.E.
Product Control Examiner
NOA No 08-1118.09
Expiration Date: April 29, 2014
Approval Date: April 29, 2009

E. MATERIAL CERTIFICATIONS (continue)

3. Test report No.ETC-06-255-17412.0, prepared by ETC Laboratories, dated 04/25/06, issued to Nan Ya Plastics Corp., for their Phenolic Foam Board / ETC06013 plastic per ASTME-E84-05 *"Standard Test Method for Surface Burning Characteristics of Building Materials"*, signed and sealed by Joseph Labora Doldan, P.E.
4. Test report No.ETC-05-255-17412.1, prepared by ETC Laboratories, dated 04/25/06, re-issued on 06/28/06 to Nan Ya Plastics Corp., for their Phenolic Foam Board / ETC06013 plastic per ASTME-E84-05 *"Standard Test Method for Surface Burning Characteristics of Building Materials"*, signed and sealed by Joseph L. Doldan, P.E.
5. Test report No.ETC-05-255-17900.0, prepared by ETC Laboratories, dated 06/28/06, issued to Nan Ya Plastics Corp., for their Phenolic Foam Board / ETC06013 plastic per ASTM D1929-96 *"Standard Test Method for Ignition Properties of Plastics"*, signed and sealed by Joseph L. Doldan, P.E.
6. Test report No.ETC-05-255-16776.0, prepared by ETC Laboratories, dated 01/04/06, issued to Nan Ya Plastics Corp., for their SMC / ETC05033 plastic per ASTM D1929-96 *"Standard Test Method for Ignition Properties of Plastics"*, ASTM D2843-99 *"Standard Test Method for Density of Smoke from the Burning or Decomposition of Plastics"*, ASTM D635-98 *"Standard Test Method for Rate of Burning and/or Extent and Time of Burning of Self-Supporting Plastics in a Horizontal Position"* and ASTM D638-03 *"Standard Test Methods for Tensile Properties of Plastics"*, signed and sealed by Joseph Labora Doldan, P.E.
7. Test report No.ETC-05-255-16777.1, prepared by ETC Laboratories, dated 07/26/06, issued to Nan Ya Plastics Corp., for their Cellular PVC / ETC05034 plastic per ASTM D1929-96 *"Standard Test Method for Ignition Properties of Plastics"*, ASTM D2843-99 *"Standard Test Method for Density of Smoke from the Burning or Decomposition of Plastics"*, ASTM D635-98 *"Standard Test Method for Rate of Burning and/or Extent and Time of Burning of Self-Supporting Plastics in a Horizontal Position"* and ASTM D638-03 *"Standard Test Methods for Tensile Properties of Plastics"*, signed and sealed by Joseph Labora Doldan, P.E.
8. Notice of Acceptance No. 09-0127.13, for "Interlayer for laminated glass" by Solutia, expiring 03-04-2014.

F. STATEMENTS

1. Statement letter dated 03/03/2009 being successor Engineer, prepared, signed and sealed by Paul E. Winter, P.E.
2. Statement letter of conformance and no financial interest, issued by PTC, dated 03/05/09, signed and sealed by Paul E. Winter, P.E.
3. Lab compliance letter as part of above test reports.

G. OTHER

1. Test proposal # **07-3867** dated 11/27/2006 approved by BCCO.

Ishaq I. Chanda

Ishaq I. Chanda, P.E.
Product Control Examiner
NOA No 08-1118.09
Expiration Date: April 29, 2014
Approval Date: April 29, 2009

NAN YA PLASTICS CORP.

IMPACT TWIN MULLED FIXED LITE PANELS

INSTALLATION ANCHORAGE DETAILS

GENERAL NOTES:

1. THE PRODUCT SHOWN HEREIN IS DESIGNED TO COMPLY WITH THE HVHZ 2004 AND 2007 FLORIDA BUILDING CODE (FBC) AT THE DESIGN PRESSURE(S) STATED HEREIN. A
2. THE PRODUCT DETAILS CONTAINED HEREIN ARE BASED UPON SIGNED AND SEALED TEST REPORTS # CTLA 1780W-1 DATED 03/06/08 AND ASSOCIATED LABORATORY STAMPED DRAWINGS. A
3. ADEQUACY OF THE EXISTING STRUCTURAL CONCRETE MASONRY AND 2X FRAMING AS A MAIN WIND FORCE RESISTING SYSTEM CAPABLE OF WITHSTANDING AND TRANSFERRING APPLIED PRODUCT LOADS TO THE STRUCTURE IS THE RESPONSIBILITY OF THE ENGINEER OR ARCHITECT OF RECORD AND TO BE REVIEWED BY AUTHORITY HAVING JURISDICTION (AHJ). A
4. 1X AND 2X BUCKS (WHEN USED) SHALL BE DESIGNED AND ANCHORED TO PROPERLY TRANSFER ALL LOADS TO THE STRUCTURE. BUCK DESIGN AND INSTALLATION IS THE RESPONSIBILITY OF THE ENGINEER OR ARCHITECT OF RECORD AND TO BE REVIEWED BY AUTHORITY HAVING JURISDICTION (AHJ). A
5. THE INSTALLATION DETAILS DESCRIBED HEREIN ARE GENERIC AND MAY NOT REFLECT ACTUAL CONDITIONS FOR A SPECIFIC SITE. IF SITE CONDITIONS CAUSE INSTALLATION TO DEVIATE FROM THE REQUIREMENTS DETAILED HEREIN, THEN THE BUILDING OFFICIAL MAY ELECT ONE OF THE FOLLOWING OPTIONS:
   - A. OUTSIDE HVHZ: REQUIRE THAT A LICENSED ENGINEER OR ARCHITECT PREPARE AND SUBMIT SITE SPECIFIC DOCUMENTS FOR USE WITH THIS DOCUMENT TO BE REVIEWED BY AUTHORITY HAVING JURISDICTION (AHJ). A
   - B. INSIDE HVHZ: REQUIRE THAT A ONE-TIME SITE SPECIFIC APPROVAL BE APPLIED FOR AND OBTAINED FROM THE MIAMI-DADE COUNTY PRODUCT CONTROL DIVISION.
6. IN AREAS WHERE WIND-BORNE DEBRIS PROTECTION REQUIREMENTS EXIST, USE OF AN APPROVED IMPACT PROTECTIVE SYSTEM IS NOT REQUIRED.
7. DOOR FRAME AND PANEL MATERIAL: FOAM CORE W/ SMC FIBERGLASS SKIN A
8. GLASS MEETS THE REQUIREMENTS OF ASTM E1300. SEE SHEET 3 FOR GLAZING DETAIL.
9. DESIGNATION "O" STANDS FOR THE FOLLOWING: O: FIXED PANEL
10. A 1/3 INCREASE IN ALLOWABLE STRESS FOR WIND LOADS WAS NOT USED IN THE DESIGN OF THE PRODUCT(S) SHOWN HEREIN. WIND LOAD DURATION FACTOR (Cd = 1.6) HAS BEEN USED FOR WOOD ANCHOR DESIGN.

INSTALLATION NOTES:

1. ONE (1) INSTALLATION ANCHOR IS REQUIRED AT EACH ANCHOR LOCATION SHOWN.
2. THE NUMBER OF INSTALLATION ANCHORS DEPICTED IS THE MINIMUM NUMBER OF ANCHORS TO BE USED FOR PRODUCT INSTALLATION. ANCHORS ARE TO MATCH TYPE, SIZE AND EMBEDMENT OF THOSE SHOWN HEREIN FOR RESPECTIVE SUBSTRATE.
3. SHIM AS REQUIRED AT EACH INSTALLATION ANCHOR WITH LOAD BEARING SHIM(S). MAXIMUM ALLOWABLE SHIM SIZE IS 1/4 INCH. SHIM WHERE SPACE OF 1/16 INCH OR GREATER OCCURS. SHIM(S) SHALL BE CONSTRUCTED OF HIGH DENSITY PLASTIC OR BETTER.
4. FOR INSTALLATION INTO WOOD FRAMING, USE #12 WOOD SCREWS OF SUFFICIENT LENGTH TO ACHIEVE 1-1/2 INCH MINIMUM EMBEDMENT. MINIMUM EDGE DISTANCE IS 3/4 INCH. USE #12 WOOD SCREWS FOR MULLION CLIPS WITH 1-1/2 INCH MINIMUM EMBEDMENT. MINIMUM EDGE DISTANCE IS 7/8 INCH.
5. FOR INSTALLATION THROUGH 1X BUCK (TO BE PROPERLY SECURED) TO CONCRETE / MASONRY, USE 1/4 INCH ITW TAPCONS OF SUFFICIENT LENGTH TO ACHIEVE 1 1/4 INCH MINIMUM EMBEDMENT. MINIMUM EDGE DISTANCE IS 2 5/8 INCHES. USE 5/16 INCH ITW TAPCONS FOR ANCHORS THROUGH MULLION CLIPS WITH 1-1/4 INCH MINIMUM EMBEDMENT. MINIMUM EDGE DISTANCE IS 4 INCHES A
6. MINIMUM EMBEDMENT AND EDGE DISTANCE EXCLUDE WALL FINISHES (INCLUDING BUT NOT LIMITED TO STUCCO, FOAM, BRICK VENEER AND SIDING).
7. INSTALLATION ANCHORS AND ASSOCIATED HARDWARE MUST BE MADE OF CORROSION RESISTANT MATERIAL OR HAVE A CORROSION RESISTANT COATING.
8. FOR HOLLOW BLOCK AND GROUT FILLED BLOCK, DO NOT INSTALL INSTALLATION ANCHORS INTO MORTAR JOINTS. EDGE DISTANCE IS MEASURED FROM FREE EDGE OF BLOCK OR EDGE OF MORTAR JOINT INTO FACE SHELL OF BLOCK.
9. INSTALLATION ANCHORS SHALL BE INSTALLED IN ACCORDANCE WITH ANCHOR MANUFACTURER'S INSTALLATION INSTRUCTIONS AND ANCHORS SHALL NOT BE USED IN SUBSTRATES WITH STRENGTHS LESS THAN THE MINIMUM STRENGTH SPECIFIED BY THE ANCHOR MANUFACTURER.
10. INSTALLATION ANCHOR CAPACITIES FOR PRODUCTS HEREIN ARE BASED ON SUBSTRATE MATERIALS WITH THE FOLLOWING PROPERTIES: A
    - A. WOOD - PT SOUTHERN YELLOW PINE, MINIMUM SPECIFIC GRAVITY OF 0.55.
    - B. CONCRETE - MINIMUM COMPRESSIVE STRENGTH OF 3192 psi AND COMPLIES WITH ACI 301, ACI 318-05 AND ACI 355
    - C. MASONRY - STRENGTH CONFORMANCE TO ASTM C-90 AND ACI 530-05, GRADE N, TYPE 1 (OR GREATER)

Approved as complying with the Florida Buiding Code
Date APR 29, 2009
NOA# 08-1118.09
Miami Dade Product Control Division
By Shaq I. Chanta

TABLE OF CONTENTS

SHEET	REV.	SHEET DESCRIPTION
1	A	GENERAL AND INSTALLATION NOTES
2	A	ELEVATIONS AND ANCHOR LAYOUTS
3	A	VERTICAL SECTIONS & GLAZING DETAIL
4	A	VERTICAL SECTIONS & CORNER DETAIL
5	A	HORIZONTAL SECTIONS
6	A	HORIZONTAL SECTIONS & BILL OF MATERIALS
7	A	COMPONENTS

DESIGN PRESSURE RATING (PSF)		IMPACT RATING
WHERE WATER INFILTRATION REQUIREMENT IS NEEDED	WHERE WATER INFILTRATION REQUIREMENT IS NOT NEEDED	LARGE MISSILE IMPACT
±70.0	±70.0	

REV	DESCRIPTION	DATE	BY
A	PER MIAMI DADE COMMENTS DATED 01/11/09	03/03/09	SMC

APPROVED BY: PAUL E. WINTER
DATE: 03/03/09

NAN YA PLASTICS CORP.
6 FL, 201 HWA N. ROAD
TAIPEI, TAIWAN

TITLE: IMPACT TWIN MULLED FIXED LITE PANELS GENERAL AND INSTALLATION NOTES

PREPARED BY: PTC, LLC Phone 321.690.1788 Fax 321.690.1789

DRAWN BY: BB
DATE: 11/07/08
SCALE: N.T.S.
DRAWING NO: NAN0016
REV: A
SHEET: 1 OF 7

PROJECT #308-0741.21

Paul E. Winter
Florida P.E. No. 22693
PTC, LLC
1535 N. Cogswell Street, Suite C25
Rockledge, Florida 32955
FBPE Certificate of Authorization NO. 25935

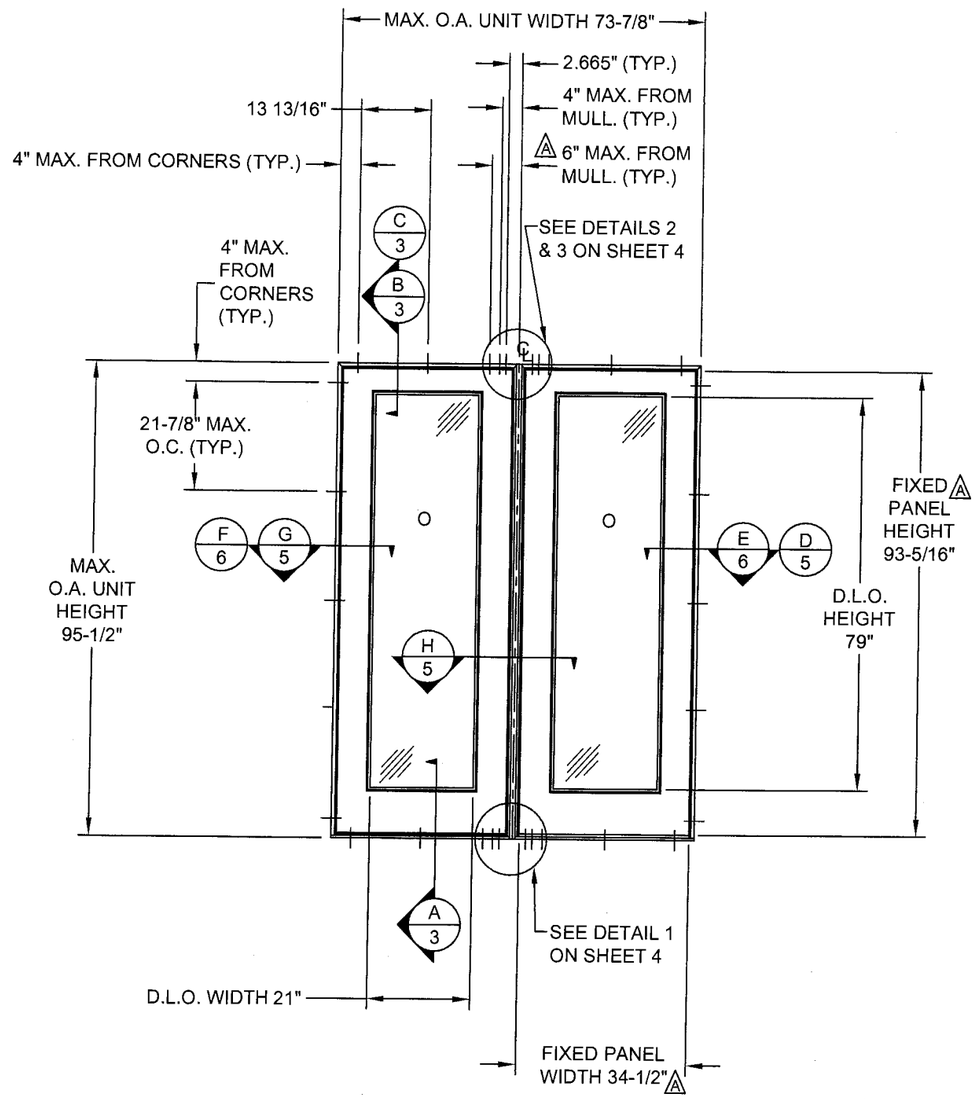

ELEVATION AND ANCHOR LAYOUT

EXTERIOR VIEW

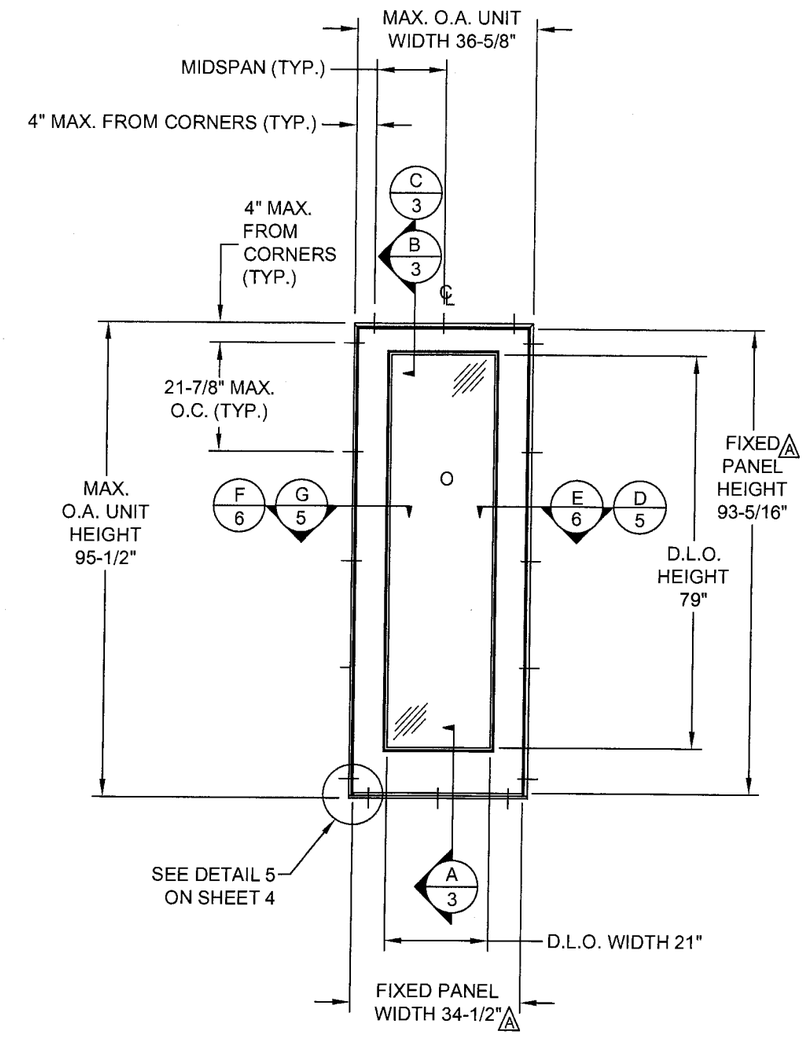

ELEVATION AND ANCHOR LAYOUT

EXTERIOR VIEW

Approved as complying with the Florida Buiding Code
Date APR 29, 2009
NOA# 08-1118.09
Miami Dade Product Control Division
By Shang I. Chang

REV	DESCRIPTION	DATE	BY
A	PER MIAMI DADE COMMENTS DATED 01/11/09	03/03/09	SMC

APPROVED BY: PAUL E. WINTER
DATE: 03/03/09

NAN YA PLASTICS CORP.
6 FL, 201 HWA N. ROAD
TAIPEI, TAIWAN

TITLE: IMPACT TWIN MULLED FIXED LITE PANELS ELEVATIONS & ANCHOR LAYOUTS

DRAWN BY: BB
DATE: 11/07/08
SCALE: N.T.S.
DRAWING NO: NAN0016
REV: A
SHEET: 2 OF 7

PREPARED BY:
PTC, LLC
Phone 321.690.1788
Fax 321.690.1789

PROJECT #308-Q741.21

Paul E. Winter
Florida P.E. No. 22693

PTC, LLC
1535 N. Cogswell Street, Suite C25
Rockledge, Florida 32955
FBPE Certificate of Authorization NO. 25935

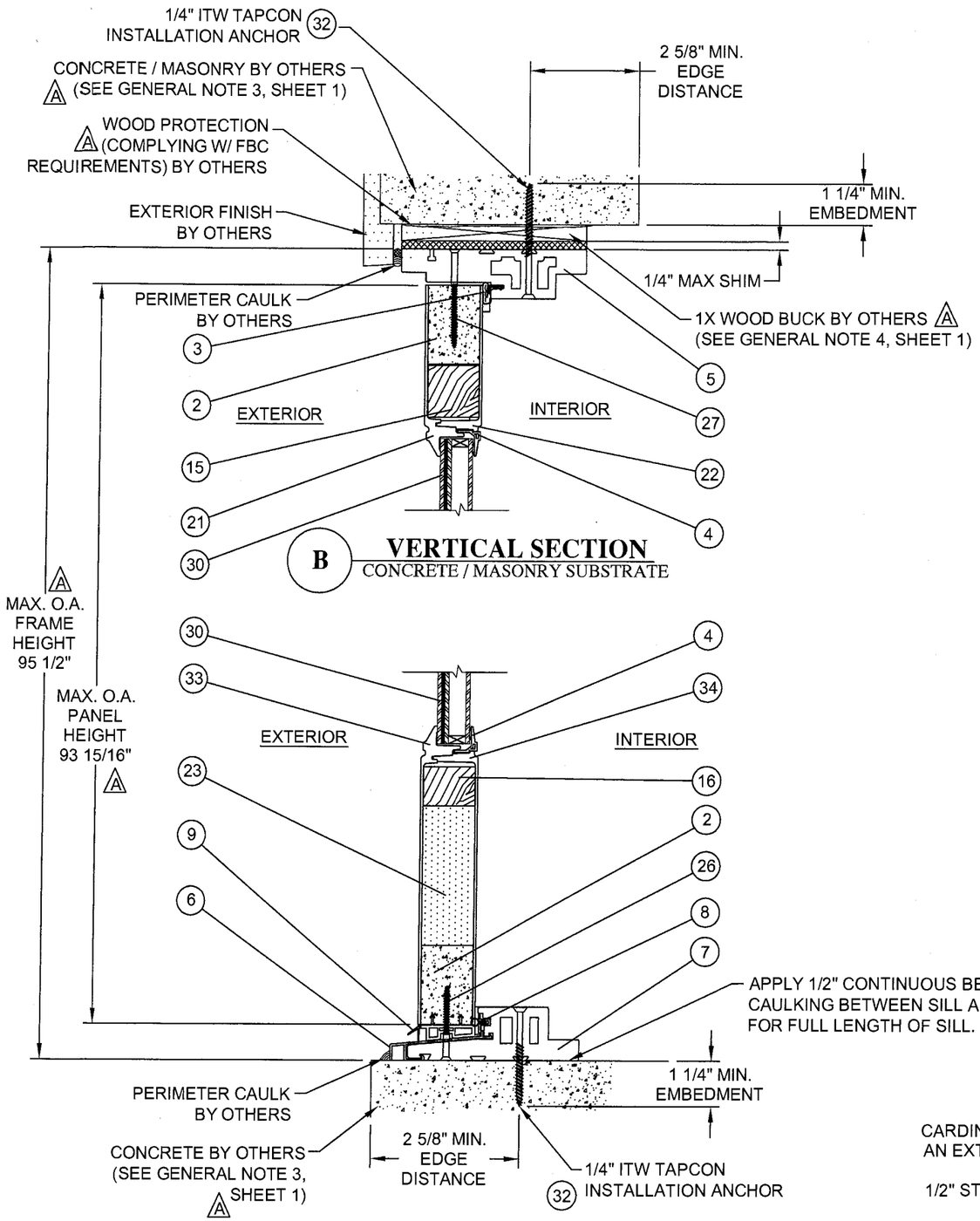

B VERTICAL SECTION
CONCRETE / MASONRY SUBSTRATE

A VERTICAL SECTION
CONCRETE SUBSTRATE

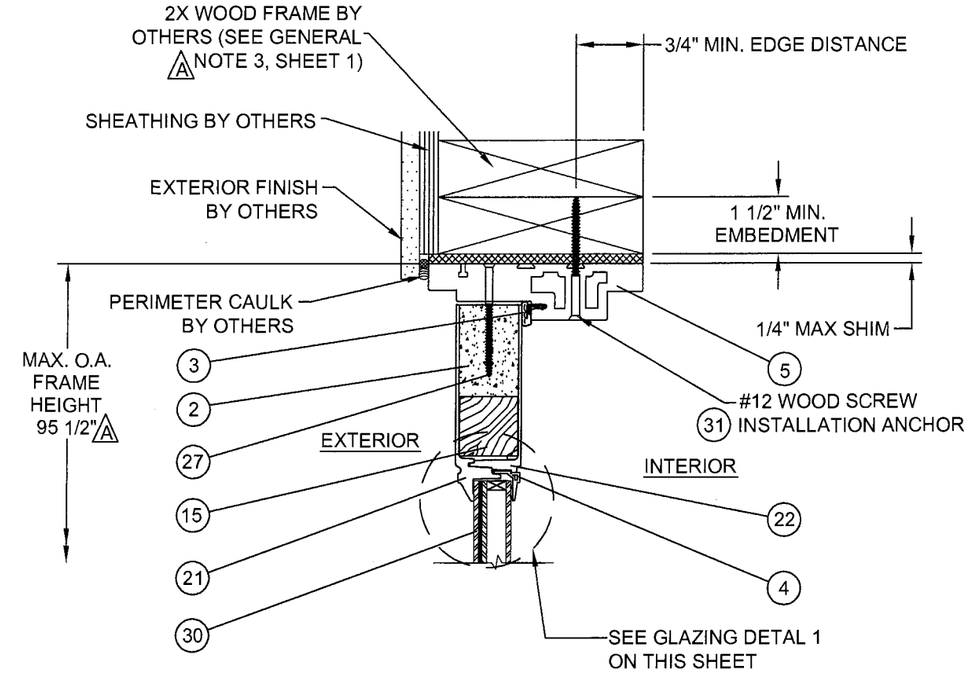

C VERTICAL SECTION
WOOD FRAME SUBSTRATE

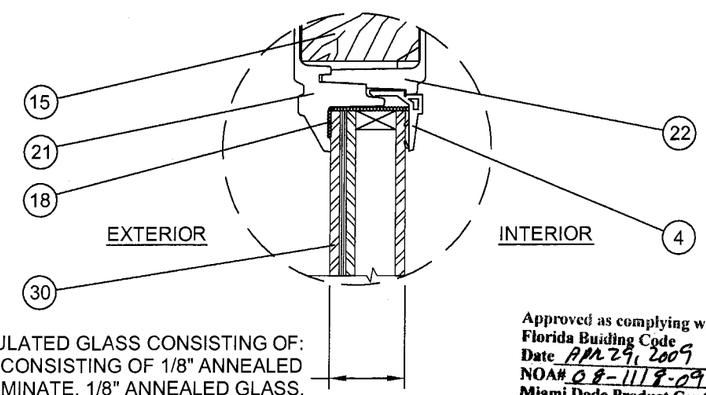

CARDINAL 1" O.A. LAMINATED INSULATED GLASS CONSISTING OF: AN EXTERIOR LAMINATED GLASS CONSISTING OF 1/8" ANNEALED GLASS, 0.090" PVB LAMINATE, 1/8" ANNEALED GLASS, 1/2" STAINLESS STEEL SPACER, 1/8" TEMPERED INTERIOR GLASS

Solutia
4/7/19

Approved as complying with the Florida Buiding Code
Date APR 29, 2009
NOA# 08-1118.09
Miami Dade Product Control Division
By Ishaq I. Uganda

GLAZING DETAIL 1

REV	DESCRIPTION	DATE	BY
A	PER MIAMI DADE COMMENTS DATED 01/11/09	03/03/09	SMC

APPROVED BY: PAUL E. WINTER
DATE: 03/03/09

NAN YA PLASTICS CORP.
6 FL, 201 HWA N. ROAD
TAIPEI, TAIWAN

TITLE: IMPACT TWIN MULLED FIXED LITE PANELS
VERTICAL SECTIONS & GLAZING DETAIL

DATE: 11/07/08
DRAWN BY: BB
DRAWING NO: NAN0016
SCALE: N.T.S.
SHEET: 3 OF 7
REV: A

PREPARED BY:
PTC, LLC
Phone 321.690.1788
Fax 321.690.1789

PROJECT #308-0741.21

Paul E. Winter
Florida P.E. No. 42693
3/3/09

PTC, LLC
1535 N. Cogswell Street, Suite C25
Rockledge, Florida 32955
FBPE Certificate of Authorization NO. 25935

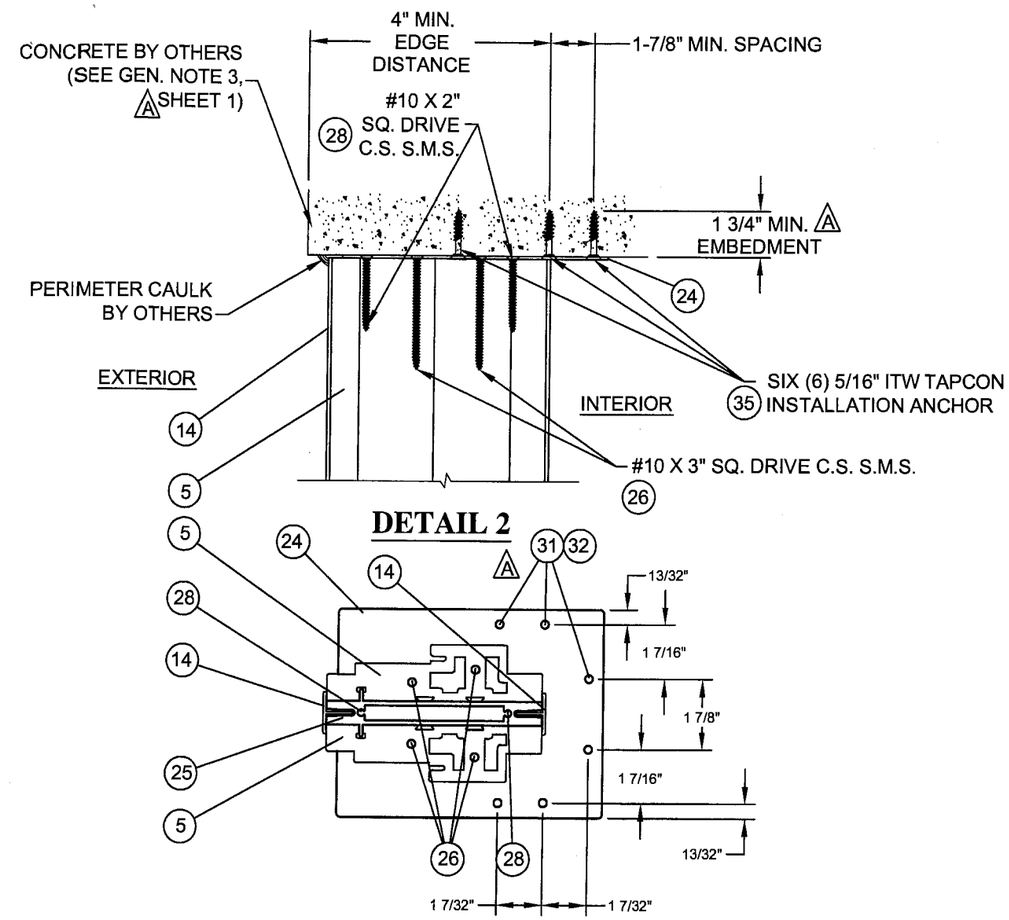

DETAIL 2

DETAIL 4 A

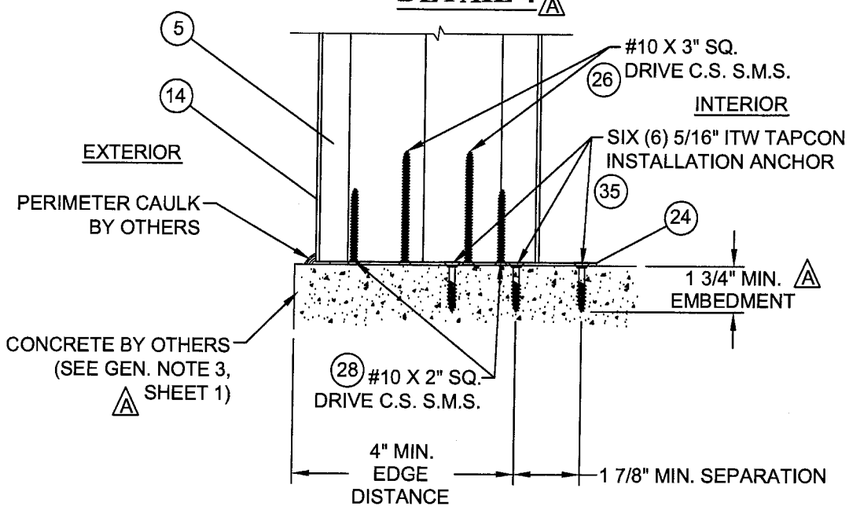

DETAIL 1

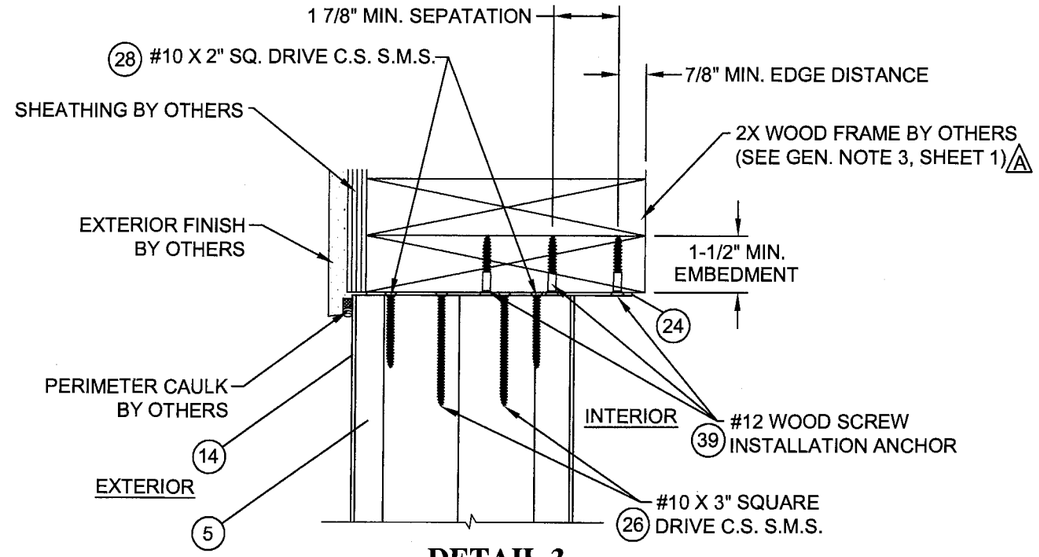

DETAIL 3

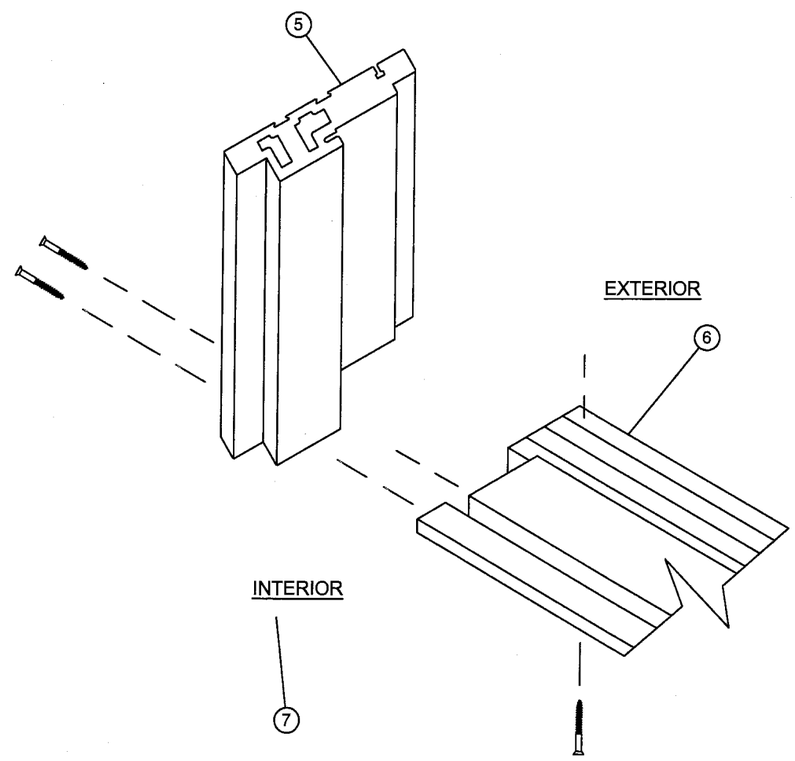

Approved as complying with the Florida Building Code
Date APR 29, 2009
NOA# 08-1118-09
Miami Dade Product Control Division
By Ishaq I. Khanda

REV	DESCRIPTION	DATE	BY
A	PER MIAMI DADE COMMENTS DATED 01/11/09	03/03/09	SMC

APPROVED BY: PAUL E. WINTER
DATE: 03/03/09

NAN YA PLASTICS CORP.
6 FL, 201 HWA N. ROAD
TAIPEI, TAIWAN

TITLE: IMPACT TWIN MULLED FIXED LITE PANELS VERTICAL SECTIONS

PREPARED BY: PTC, LLC
Phone 321.690.1788
Fax 321.690.1789

DRAWN BY: BB
DATE: 11/07/08
SCALE: N.T.S.
DRAWING NO: NAN0016
REV: A
SHEET: 4 OF 7

PROJECT #308-0741.21

Paul E. Winter
Florida P.E. No. 22693

3/5/09

PTC, LLC
1535 N. Cogswell Street, Suite C25
Rockledge, Florida 32955
FBPE Certificate of Authorization NO. 25935

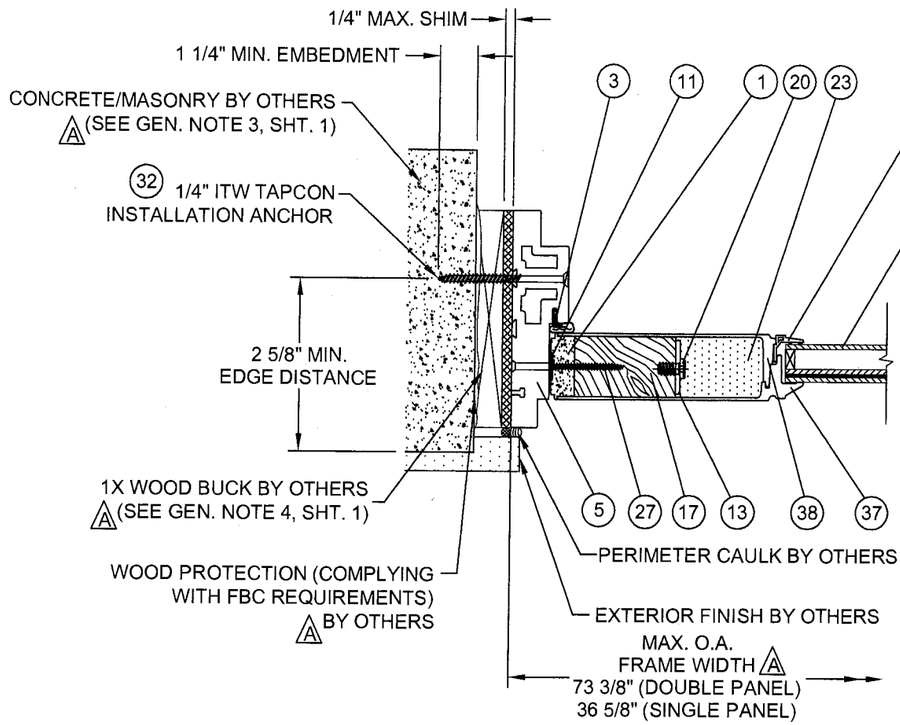

G HORIZONTAL SECTION
CONCRETE / MASONRY SUBSTRATE

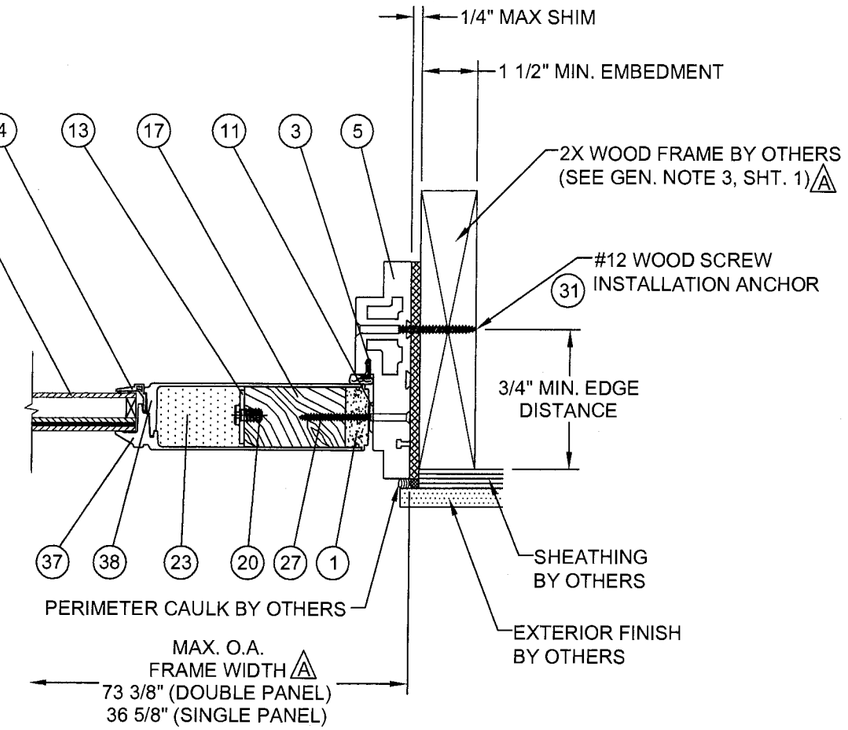

D HORIZONTAL SECTION
WOOD FRAME SUBSTRATE

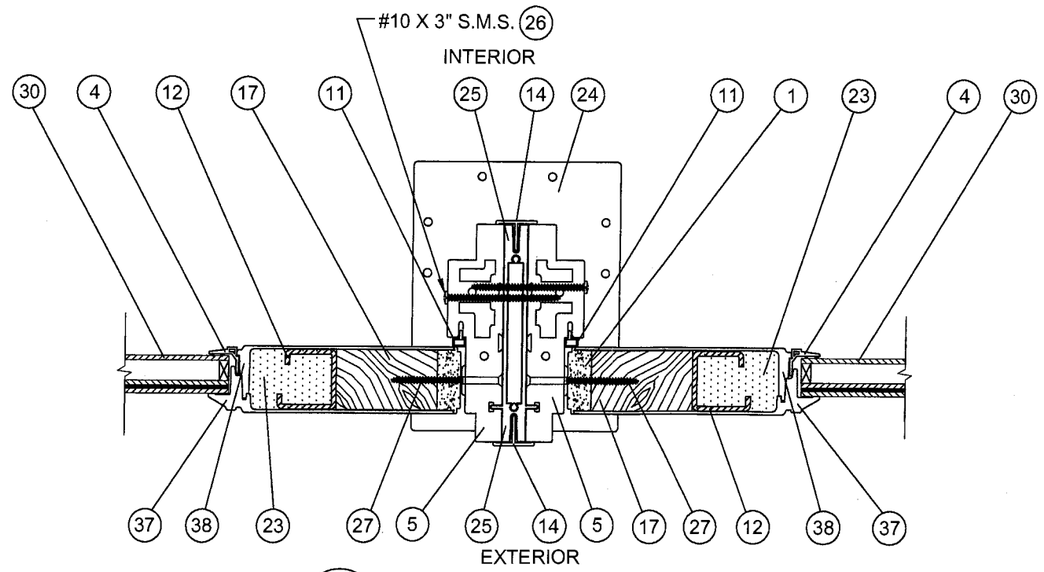

H HORIZONTAL SECTION
MULLION

Approved as complying with the Florida Buiding Code
Date APR 29, 2009
NOA# 08-1118.09
Miami Dade Product Control Division
By Shaq I. Chanda

REV	DESCRIPTION	DATE	BY
A	PER MIAMI DADE COMMENTS DATED 01/11/09	03/03/09	SMC

APPROVED BY: PAUL E. WINTER
DATE: 03/03/09

NAN YA PLASTICS CORP.
6 FL, 201 HWA N. ROAD
TAIPEI, TAIWAN

TITLE: IMPACT TWIN MULLED FIXED LITE PANELS
HORIZONTAL SECTIONS

DRAWN BY: BB
DATE: 11/07/08
SCALE: N.T.S.
DRAWING NO: NAN0016
REV: A
SHEET: 5 OF 7

PREPARED BY:
PTC, LLC
Phone 321.690.1788
Fax 321.690.1789

PROJECT #308-0741.21

Paul E. Winter
Florida P.E. No. 42863
3/3/09
PTC, LLC
1535 N. Cogswell Street, Suite C25
Rockledge, Florida 32955
FBPE Certificate of Authorization NO. 26935

BILL OF MATERIALS

ITEM NO.	QTY.	DISCRIPTION	MATERIAL	VENDOR A
1	4	5/8" STILE	FOAM PVC	NAN YA PLASTICS
2	4	TOP & BOTTOM RAIL	FOAM PVC	NAN YA PLASTICS
3	6	LITE FRAME A	FOAM PVC	NAN YA PLASTICS
4	8	1" GLAZING BEAD	PVC	NAN YA PLASTICS
5	6	5 3/4" HEAD FRAME & JAMB	PVC CO-EX	NAN YA PLASTICS
6	2	OUTSWING SILL-B	ALUMINUM	NAN YA PLASTICS
7	2	OUTSWING SILL-A	PVC CO-EX	NAN YA PLASTICS
8	2	WEATHERSTRIP (A)	PP & TPE	NAN YA PLASTICS
9	2	DOOR BOTTOM A	PVC CO-EX	NAN YA PLASTICS
11	3	PANEL GAP PLANK A	FOAM PVC	NAN YA PLASTICS
12	2	1 3/8" REINFORCEMENT STEEL	SPHC	-----
13	2	1/8" REINFORCEMENT SHEET STEEL	SPHC	-----
14	2	MULLION COVER	PVC CO-EX	NAN YA PLASTICS
15	2	1-9/16" REINFORCEMENT WOOD - D	WHITE PINE WOOD	-----
16	2	1-3/16" REINFORCEMENT WOOD - C	WHITE PINE WOOD	-----
17	4	2-23/32" REINFORCEMENT WOOD - A	WHITE PINE WOOD	-----
18	---	DOW CORNING 995 STRUCTURAL SEALANT GLAZING MATERIAL	SILICONE	DOW CORNING
20	12	PLASTIC SCREW	NYLON 66	-----
21	2	SMC 18P FIBERGLASS SKIN (EXTERIOR) (TOP RAIL) ts = .085", Fy - 11,000 PSI A	SHEET MOLDING COMPOUND	NAN YA PLASTICS
22	2	SMC 18P FIBERGLASS SKIN (INTERIOR) (TOP RAIL) ts = .085", Fy = 11,000 PSI A	SHEET MOLDING COMPOUND	NAN YA PLASTICS
23	2	PHENOLIC FOAM A	N.A.	NAN YA PLASTICS
24	2	MULLION CLIP	STAINLESS STEEL	NAN YA PLASTICS
25	1	ALUMINUM MULLION	ALUMINUM (6063-T5)	NAN YA PLASTICS
26	44	#10 X 3" PHILLIPS SQUARE DRIVE SCREWS	SHEET METAL	-----
27	36	#10 X 2-1/2" PHILLIPS SQUARE DRIVE SCREWS	SHEET METAL	-----
28	4	#10 X 2" PHILLIPS SQUARE DRIVE SCREWS	SHEET METAL	-----
29	6	#9 X1-1/2" PFH SCREWS	SHEET METAL	-----
30	1	CARDINAL 1" O.A. LAMINATED INSULATED GLASS CONSISTING OF: AN EXTERIOR LAMINATED GLASS CONSISTING OF 1/8" ANNEALED GLASS, 0.090" PVB LAMINATE, 1/8" ANNEALED GLASS, 1/2" STAINLESS STEEL SPACER, 1/8" TEMPERED INTERIOR GLASS	GLASS (Solutia PVB) 4/17/9	CARDINAL
31	AS REQ'D	#12 WOOD INSTALLATION SCREW	STEEL	-----
32	AS REQ'D	1/4" ITW TAPCON INSTALLATION ANCHOR	STEEL	-----
33	1	SMC 18P FIBERGLASS SKIN (EXTERIOR) (BOTTOM RAIL) ts = .085", Fy = 11,000 PSI A	SHEET MOLDING COMPOUND	NAN YA PLASTICS
34	1	SMC 18P FIBERGLASS SKIN (INTERIOR) (BOTTOM RAIL) ts = .085", Fy = 11,000 PSI A	SHEET MOLDING COMPOUND	NAN YA PLASTICS
35	AS REQ'D	5/16" ITW TAPCON INSTALLATION ANCHOR	STEEL	-----
36	AS REQ'D	#12 WOOD INSTALLATION SCREW	STEEL	-----
37	2	SMC 18P FIBERGLASS SKIN (EXTERIOR) (STILE) ts = .085", Fy = 11,000 PSI A	SHEET MOLDING COMPOUND	NAN YA PLASTICS
38	2	SMC 18P FIBERGLASS SKIN (INTERIOR) (STILE) ts = .085", Fy = 11,000 PSI A	SHEET MOLDING COMPOUND	NAN YA PLASTICS
39	4	#12 WOOD SCREW	STEEL	-----

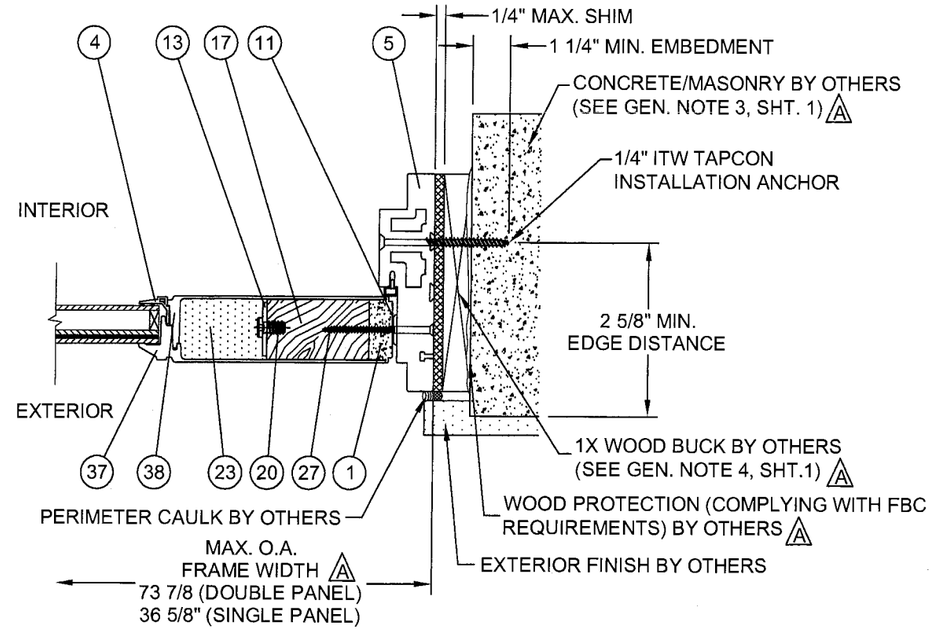

E HORIZONTAL SECTION
CONCRETE / MASONRY SUBSTRATE

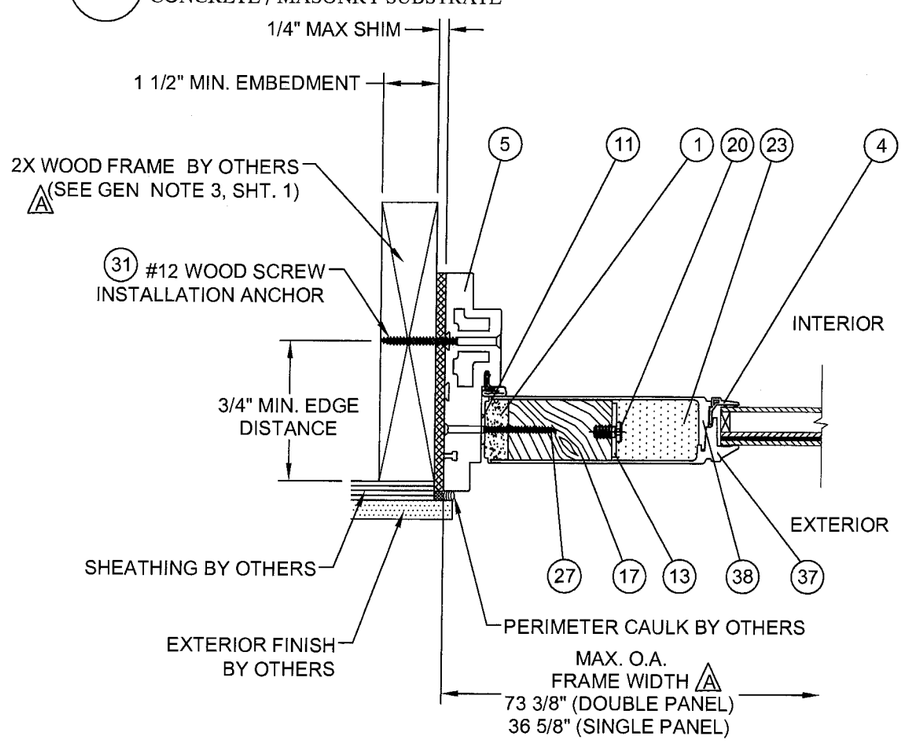

F HORIZONTAL SECTION
WOOD FRAME SUBSTRATE

REV	DESCRIPTION	DATE	BY
A	PER MIAMI DADE COMMENTS DATED 01/11/09	03/03/09	SMC

APPROVED BY: PAUL E. WINTER
DATE: 03/03/09

NAN YA PLASTICS CORP.
6 FL, 201 HWA N. ROAD
TAIPEI, TAIWAN

TITLE: IMPACT TWIN MULLED FIXED LITE PANELS
HORIZONTAL SECTIONS & BILL OF MATERIALS

DRAWN BY: BB
DATE: 11/07/08
SCALE: N.T.S.
DRAWING NO: NAN0016
REV: A
SHEET: 6 OF 7

PREPARED BY:
PTC, LLC
Phone 321.690.1788
Fax 321.690.1789

PROJECT #308-0741.21

Paul E. Winter
Florida P.E. No. 22693

PTC, LLC
1535 N. Cogswell Street, Suite C25
Rockledge, Florida 32955
FBPE Certificate of Authorization NO. 25935

Approved as complying with the Florida Building Code
Date APR 29, 2009
NOA# 08-1118.05
Miami Dade Product Control Division
By Sheng I. Chang

1. 5/8" STILE
FOAM PVC

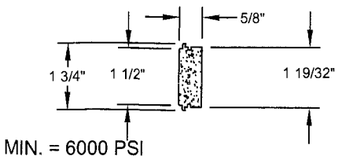

Fy MIN. = 6000 PSI

2. TOP & BOTTOM RAIL
FOAM PVC

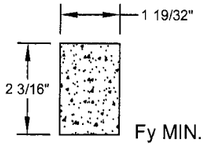

Fy MIN. = 6000 PSI

3. Q-LON WEATHER STRIPPING
FOAM PVC

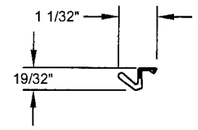

4. 5/8" GLAZING BEAD
PVC

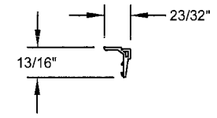

5. HEAD FRAME & JAMB
FOAM PVC CO-EX

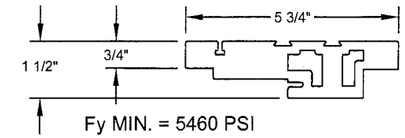

Fy MIN. = 5460 PSI

6. OUTSWING SILL-B (EXTERIOR)
6063-T5 ALUMINUM
TYP. WALL THICKNESS 0.063"

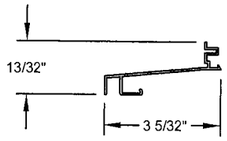

7. OUTSWING SILL-A (INTERIOR)
FOAM PVC CO-EX

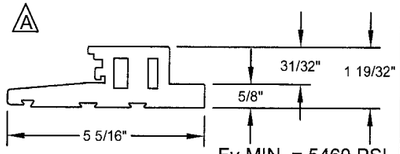

Fy MIN. = 5460 PSI

8. WEATHERSTRIP (A)
PP & TPE

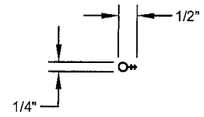

9. DOOR BOTTOM A
PVC CO-EX

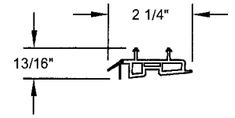

11. DOOR GAP PLANK
RIGID PVC

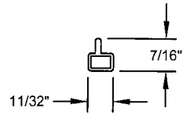

12. 1 3/8" REINFORCEMENT STEEL
SPHC TYP. WALL THICKNESS 1/8"

Fy = 36 KSI
L = 88.5"

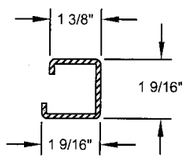

13. 1/8" REINFORCEMENT SHEET STEEL
SPHC TYP. WALL THICKNESS 1/8"

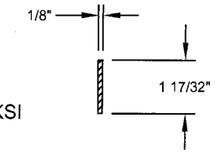

Fy = 36 KSI
L = 88.5"

14. MULLION COVER
PVC CO-EX

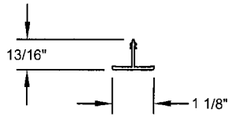

15. 1-9/16" REINFORCEMENT WOOD - D
WHITE PINE WOOD

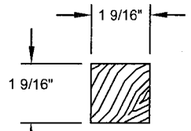

L = 34.5"

16. 1-3/16" REINFORCEMENT WOOD - C
WHITE PINE WOOD

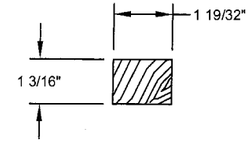

17. 2-23/32" REINFORCEMENT WOOD - A
WHITE PINE WOOD

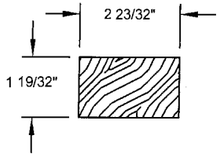

25. MULLION
6063-T5 ALUMINUM
TYP. WALL THICKNESS 1/8"

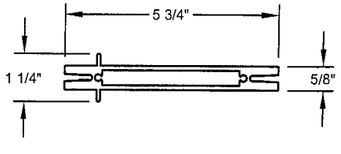

Ix = 6.74 in.^{4}
Sx = 2.3 in.^{3}

21. TOP RAIL SMC 18P
FIBERGLASS SKIN (EXTERIOR)
TYP. WALL THICKNESS 0.085"

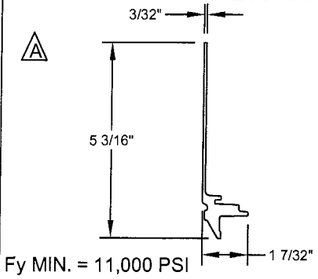

Fy MIN. = 11,000 PSI

22. TOP RAIL SMC 18P FIBERGLASS
SKIN (INTERIOR)
TYP. WALL THICKNESS 0.085"

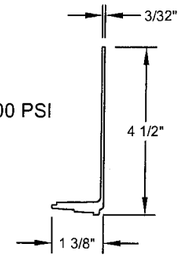

Fy MIN. = 11,000 PSI

37. STILE RAIL SMC 18P
FIBERGLASS SKIN (EXTERIOR)
TYP. WALL THICKNESS 0.085"

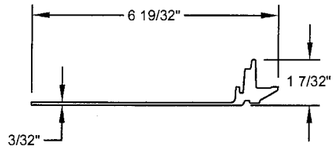

Fy MIN. = 11,000 PSI

20. PASSIVE SCREW
NYLON 66

24. MULLION CLIP
STAINLESS STEEL
TYP. WALL THICKNESS 5/64"

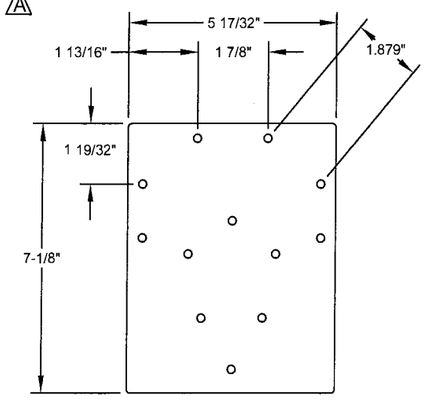

33. BOTTOM RAIL SMC 18P
FIBERGLASS SKIN (EXTERIOR)
TYP. WALL THICKNESS 0.085"

Fy MIN. =
11,000 PSI

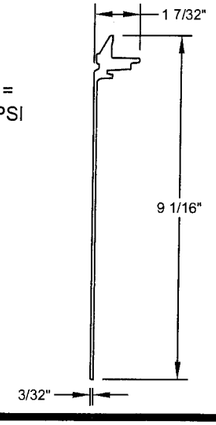

34. BOTTOM RAIL SMC 18P
FIGERGLASS SKIN (INTERIOR)
WALL THICKNESS 0.085"

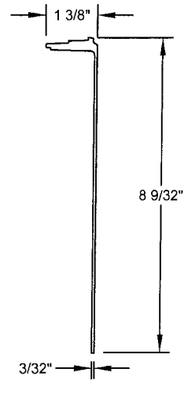

Fy MIN. =
11,000 PSI

38. STILE RAIL SMC 18P
FIBERGLASS SKIN (INTERIOR)
TYP. WALL THICKNESS 0.085"

Fy MIN. =
11,000 PSI

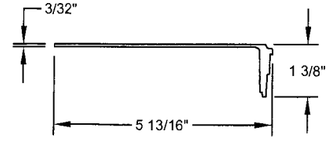

REV	DESCRIPTION	DATE	BY
A	PER MIAMI DADE COMMENTS DATED 01/11/09	03/03/09	SMC

APPROVED BY: PAUL E. WINTER
DATE: 03/03/09

NAN YA PLASTICS CORP.
6 FL, 201 HWA N. ROAD
TAIPEI, TAIWAN

TITLE: IMPACT TWIN MULLED FIXED LITE PANELS COMPONENTS

DRAWN BY: BB
DATE: 11/07/08
SCALE: N.T.S.
DRAWING NO: NAN0016
REV: A
SHEET: 7 OF 7

PREPARED BY:
PTC, LLC
Phone 321.690.1788
Fax 321.690.1789

PROJECT #308-0741.21
Paul E. Winter
Florida P.E. No. 22693

PTC, LLC
1535 N. Cogswell Street, Suite C25
Rockledge, Florida 32955
FBPE Certificate of Authorization NO. 25935

Approved as complying with the
Florida Buiding Code
Date APR 29, 2009
NOA# 08-1118.09
Miami Dade Product Control
Division
By Shaq I. Chand