MIAMI-DADE COUNTY

BUILDING CODE COMPLIANCE OFFICE (BCCO)
PRODUCT CONTROL DIVISION

MIAMI-DADE COUNTY, FLORIDA
METRO-DADE FLAGLER BUILDING
140 WEST FLAGLER STREET, SUITE 1603
MIAMI, FLORIDA 33130-1563
(305) 375-2901 FAX (305) 372-6339
www.miamidade.gov/buildingcode

NOTICE OF ACCEPTANCE (NOA)

R. C. Aluminum Industries, Inc.
2805 NW 75th Avenue
Miami, FL 33122

SCOPE:

This NOA is being issued under the applicable rules and regulations governing the use of construction materials. The documentation submitted has been reviewed by Miami–Dade County Product Control Division and accepted by the Board of Rules and Appeals (BORA) to be used in Miami–Dade County and other areas where allowed by the Authority Having Jurisdiction (AHJ).

This NOA shall not be valid after the expiration date stated below. The Miami–Dade County Product Control Division (In Miami–Dade County) and/or the AHJ (in areas other than Miami–Dade County) reserve the right to have this product or material tested for quality assurance purposes. If this product or material fails to perform in the accepted manner, the manufacturer will incur the expense of such testing and the AHJ may immediately revoke, modify, or suspend the use of such product or material within their jurisdiction. BORA reserves the right to revoke this acceptance, if it is determined by Miami–Dade County Product Control Division that this product or material fails to meet the requirements of the applicable building code.

This product is approved as described herein, and has been designed to comply with the Florida Building Code, including the High Velocity Hurricane Zone.

DESCRIPTION: Series "2400 ST" Aluminum Sliding Glass Door – S.M.I.

APPROVAL DOCUMENT: Drawing No. **W01–54**, titled "Series – 2400ST Alum. Sld. Glass Door (S.M.I.)", sheets 1 through 9 of 9, dated 08/17/01 with revision "**M**" dated 09/14/09, prepared by Al – Farooq Corporation, signed and sealed by Arshad Viqar, P. E., bearing the Miami–Dade County Product Control Revision stamp with the Notice of Acceptance number and expiration date by the Miami–Dade County Product Control Division.

MISSILE IMPACT RATING: Small Missile Impact Resistant

LIMITATIONS: Miami–Dade County Product Control Approved Shutters Or Protection Devices Shall Be Required.

LABELING: Each unit shall bear a permanent label with the manufacturer's name or logo, city, state and following statement: "Miami–Dade County Product Control Approved", unless otherwise noted herein.

RENEWAL of this NOA shall be considered after a renewal application has been filed and there has been no change in the applicable building code negatively affecting the performance of this product.

TERMINATION of this NOA will occur after the expiration date or if there has been a revision or change in the materials, use, and/or manufacture of the product or process. Misuse of this NOA as an endorsement of any product, for sales, advertising or any other purposes shall automatically terminate this NOA. Failure to comply with any section of this NOA shall be cause for termination and removal of NOA.

ADVERTISEMENT: The NOA number preceded by the words Miami–Dade County, Florida, and followed by the expiration date may be displayed in advertising literature. If any portion of the NOA is displayed, then it shall be done in its entirety.

INSPECTION: A copy of this entire NOA shall be provided to the user by the manufacturer or its distributors and shall be available for inspection at the job site at the request of the Building Official.

This NOA **revises NOA # 07–1019.01** and consists of this page 1 and evidence pages E–1, E–2, E–3 and E–4, as well as approval document mentioned above.

The submitted documentation was reviewed by **Jaime D. Gascon, P. E.**

MIAMI-DADE COUNTY APPROVED

J. Gascon
10/15/09

R.C. Aluminum Industries, Inc.

NOTICE OF ACCEPTANCE: EVIDENCE SUBMITTED

A. DRAWINGS

1. Manufacturer's die drawings and sections.
2. Drawing No. **W01–54**, titled "Series – 2400ST Alum SLD. Glass Door (S.M.I.)", sheets 1 through 8 of 8, dated 08/17/01 with revision "**M**" dated 09/14/09, prepared by Al–Farooq Corporation signed and sealed by Arshad Viqar, P. E.

B. TESTS

1. Test reports on: 1) Air Infiltration Test, per FBC, TAS 202–94
   2) Uniform Static Air Pressure Test, Loading per FBC TAS 202–94
   3) Water Resistance Test, per FBC, TAS 202–94
   4) Small Missile Impact Test per FBC, TAS 201–94
   5) Cyclic Wind Pressure Loading per FBC, TAS 203–94
   6) Forced Entry Test, per FBC 2411 3.2.1 (b) and TAS 202–94

   along with marked–up drawings and installation diagram of an aluminum sliding glass door, prepared by Fenestration Testing Laboratory, Inc., Test Report No. **FTL–5723**, dated 10/01/08, signed and sealed by Carlos S. Rionda, P. E.

2. Test reports on: 1) Air Infiltration Test, per FBC, TAS 202–94
   2) Uniform Static Air Pressure Test, Loading per FBC TAS 202–94
   3) Water Resistance Test, per FBC, TAS 202–94
   4) Small Missile Impact Test per FBC, TAS 201–94
   5) Cyclic Wind Pressure Loading per FBC, TAS 203–94
   6) Forced Entry Test, per FBC 2411 3.2.1 (b) and TAS 202–94

   along with marked–up drawings and installation diagram of an aluminum sliding glass door, prepared by Fenestration Testing Laboratory, Inc., Test Report No. **FTL–5677**, dated 09/04/08, signed and sealed by Carlos S. Rionda, P. E.

3. Test reports on: 1) Air Infiltration Test, per FBC, TAS 202–94
   2) Uniform Static Air Pressure Test, Loading per FBC TAS 202–94
   3) Water Resistance Test, per FBC, TAS 202–94
   4) Small Missile Impact Test per FBC, TAS 201–94
   5) Cyclic Wind Pressure Loading per FBC, TAS 203–94
   6) Forced Entry Test, per FBC 2411 3.2.1 (b) and TAS 202–94

   along with marked–up drawings and installation diagram of an aluminum sliding glass door, prepared by Fenestration Testing Laboratory, Inc., Test Report No. **FTL–5118**, dated 08/28/08, signed and sealed by Carlos S. Rionda, P. E.

Jaime D. Gascon, P. E.
Chief, Product Control Division
NOA No. 08–1119.07
Expiration Date: February 07, 2012
Approval Date: November 04, 2009

NOTICE OF ACCEPTANCE: EVIDENCE SUBMITTED

B. TESTS (CONTINUED)

4. Test reports on: 1) Air Infiltration Test, per FBC, TAS 202–94
2) Uniform Static Air Pressure Test, Loading per FBC TAS 202–94
3) Water Resistance Test, per FBC, TAS 202–94
4) Small Missile Impact Test per FBC, TAS 201–94
5) Cyclic Wind Pressure Loading per FBC, TAS 203–94
6) Forced Entry Test, per FBC 2411 3.2.1 (b) and TAS 202–94
along with marked–up drawings and installation diagram of an aluminum sliding glass door, prepared by Fenestration Testing Laboratory, Inc., Test Report No. **FTL–5108**, dated 02/02/07, signed and sealed by Michael Wenzel, P. E.
(Submitted under NOA# 07–1019.01)

5. Test reports on: 1) Air Infiltration Test, per FBC, TAS 202–94
2) Uniform Static Air Pressure Test, Loading per FBC, TAS 202–94
3) Water Resistance Test, per FBC, TAS 202–94
4) Small Missile Impact Test per FBC, TAS 201–94
5) Cyclic Wind Pressure Loading per FBC, TAS 203–94
6) Forced Entry Test, per FBC 2411 3.2.1 (b) and TAS 202–94
along with marked–up drawings and installation diagram of an aluminum sliding glass door, prepared by Fenestration Testing Laboratory, Inc., Test Report No. **FTL–4895**, dated 08/23/06, signed and sealed by Edmundo Largaespada, P. E.
(Submitted under NOA# 07–0124.07)

6. Test reports on: 1) Small Missile Impact Test per FBC, TAS 201–94
2) Cyclic Wind Pressure Loading per FBC, TAS 203–94
along with marked–up drawings and installation diagram of an aluminum sliding glass door, prepared by Fenestration Testing Laboratory, Inc., Test Report No. **FTL–4993**, dated 07/19/06, signed and sealed by Edmundo Largaespada, P. E.
(Submitted under NOA# 07–0124.07)

7. Test reports on: 1) Uniform Static Air Pressure Test, Loading per FBC TAS 202–94
2) Small Missile Impact Test per FBC, TAS 201–94
3) Cyclic Wind Pressure Loading per FBC, TAS 203–94
along with marked–up drawings and installation diagram of an aluminum sliding glass door, prepared by Fenestration Testing Laboratory, Inc., Test Report No. **FTL–4615**, dated 6/16/05, signed and sealed by Edmundo Largaespada, P. E.
(Submitted under NOA# 06–0327.05)

Jaime D. Gascon, P. E.
Chief, Product Control Division
NOA No. 08–1119.07
Expiration Date: February 07, 2012
Approval Date: November 04, 2009

NOTICE OF ACCEPTANCE: EVIDENCE SUBMITTED

B. TESTS (CONTINUED)

8. Test reports on: 1) Air Infiltration Test, per FBC, TAS 202–94
2) Uniform Static Air Pressure Test, Loading per FBC, TAS 202–94
3) Water Resistance Test, per FBC, TAS 202–94
4) Large Missile Impact Test per FBC, TAS 201–94
5) Small Missile Impact Test per FBC, TAS 201–94
6) Cyclic Wind Pressure Loading per FBC, TAS 203–94
7) Forced Entry Test, per FBC 2411 3.2.1 (b) and TAS 202–94

Along with marked–up drawings and installation diagram of an aluminum sliding glass door, prepared by Fenestration Testing Laboratory, Inc., Test Report No. **FTL–3106**, dated 08/03/01, signed and sealed by Luis Figueredo, P. E.
(Submitted under NOA# 01–0927.04)

C. CALCULATIONS

1. Anchor verification calculations and structural analysis, complying with FBC–2007, prepared by Al–Farooq Corporation, dated 10/15/09, signed and sealed by Arshad Viqar, P. E.
Complies with ASTM E1300–04

D. QUALITY ASSURANCE

1. Miami–Dade Building Code Compliance Office (BCCO).

E. MATERIAL CERTIFICATIONS

1. Notice of Acceptance No. **09–0312.02** issued to E.I. DuPont DeNemours & Co., Inc. for their "**DuPont Butacite® PVB, Interlayer**" dated 05/13/09, expiring on 12/11/10.

2. Notice of Acceptance No. **09-0312.03** issued to E.I. DuPont DeNemours & Co., Inc. for their "**DuPont Sentry Glass® Interlayer**" dated 05/13/09, expiring on 01/14/12.

F. STATEMENTS

1. Statement letter of change, dated 10/15/09, signed and sealed by Arshad Viqar, P. E.

2. Statement letter of conformance, 10/15/09, signed and sealed by Arshad Viqar, P. E.

3. Statement letter of no financial interest, dated 10/15/09, signed and sealed by Arshad Viqar, P. E.

4. Laboratory compliance letter for Test Report No. **FTL–5723**, **FTL–5677** and **FTL–5118** issued by Fenestration Testing Laboratory, Inc., dated October 01, September 04 and August 28, 2008, signed and sealed by Carlos S. Rionda, P. E.

5. Laboratory compliance letter for Test Report No. **FTL–5108**, issued by Fenestration Testing Laboratory, Inc., dated February 02, 2007, signed and sealed by Michael Wenzel, P. E.
(Submitted under NOA# 07–1019.01)

Jaime D. Gascon, P. E.
Chief, Product Control Division
NOA No. 08–1119.07
Expiration Date: February 07, 2012
Approval Date: November 04, 2009

NOTICE OF ACCEPTANCE: EVIDENCE SUBMITTED

F. STATEMENTS (CONTINUED)

6. Laboratory compliance letter for Test Report No.'s **FTL–4895**, **FTL–4993** and **FTL–4615** issued by Fenestration Testing Laboratory, Inc., dated August 23, July 19, 2006 and June 16, 2005, signed and sealed by Edmundo Largaespada, P. E.
   (Submitted under NOA# 07–0124.07)
7. Laboratory compliance letter for Test Report No. **FTL–3106**, issued by Fenestration Testing Laboratory, Inc., dated August 03, 2001, signed and sealed by Luis Figueredo, P. E.
   (Submitted under NOA# 01–0927.04)
8. Proposal from March 17, 2008 issued by BCCO, dated June 09, 2008, signed by Jaime D. Gascon, P. E.
   (Submitted under NOA# 07–0124.07)

G. OTHERS

1. Notice of Acceptance No. **07–1019.01**, issued to R.C. Aluminum Industries, Inc. for their "Series 2400ST Aluminum Sliding Glass Door – S.M.I.", approved on 02/28/08 and expiring on 02/07/12.

Jaime D. Gascon, P. E.
Chief, Product Control Division
NOA No. 08–1119.07
Expiration Date: February 07, 2012
Approval Date: November 04, 2009

DAYLITE OPENINGS:

DLO WIDTH = $\frac{\text{FRAME WIDTH}}{4}$ − 3.937

DLO HEIGHT = FRAME HEIGHT − 5.500

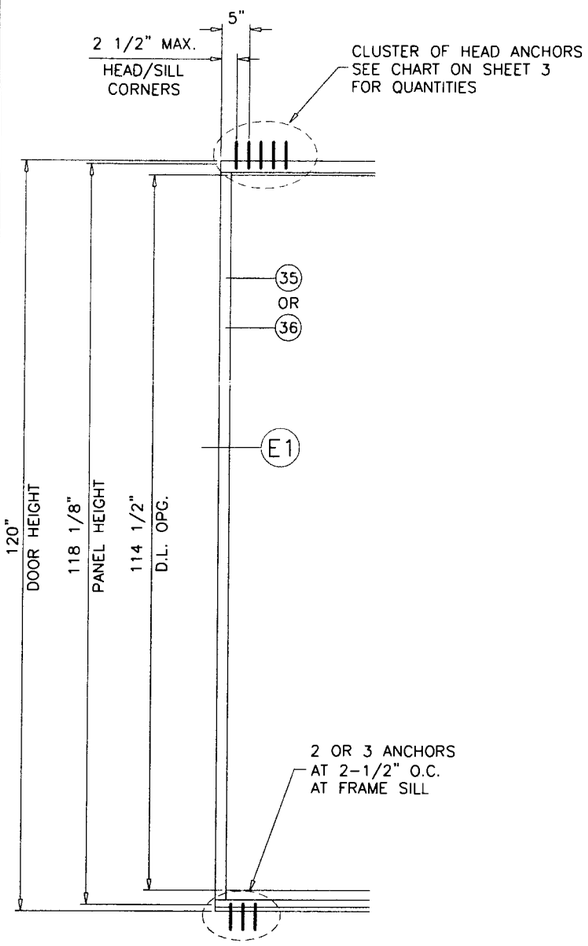

JAMB OPTION W/O ANCHORS

(120" MAX. DOOR HEIGHT USING ITEMS #35 OR #36)

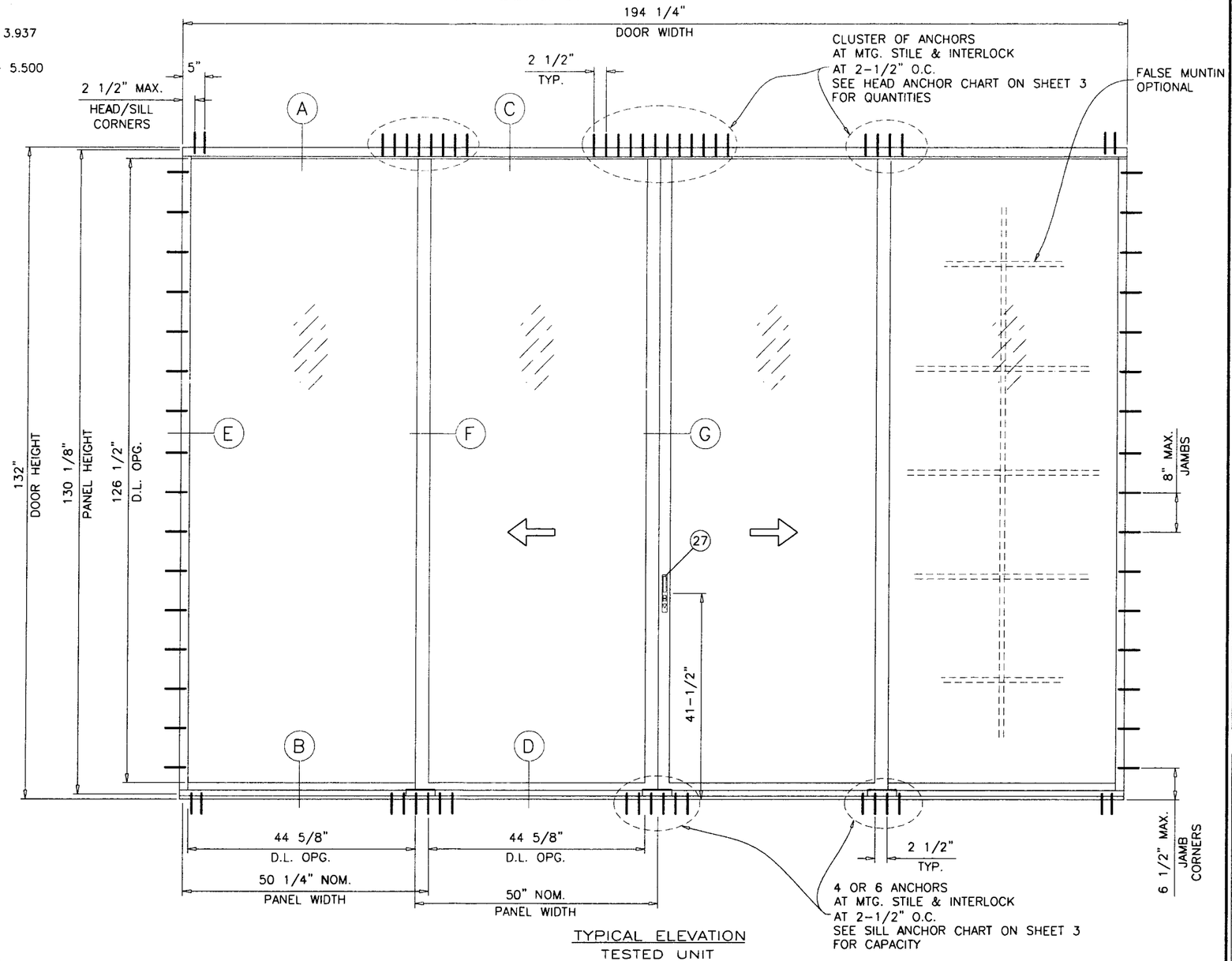

TYPICAL ELEVATION

TESTED UNIT

SERIES-2400ST ALUMINUM SLIDING GLASS DOOR

SEE SHEET 2 FOR DESIGN LOAD CAPACITY OF DESIRED GLASS SIZE.

USING CHART ON SHEET 3 SELECT ANCHOR OPTION WITH DESIGN RATING MORE THAN DESIGN LOADS REQUIRED.

LOWER DESIGN PRESSURES FROM GLASS OR ANCHOR CHARTS WILL APPLY TO ENTIRE SYSTEM.

THIS PRODUCT HAS BEEN DESIGNED AND TESTED TO COMPLY WITH THE REQUIREMENTS OF THE FLORIDA BUILDING CODE 2007 EDITION INCLUDING HIGH VELOCITY HURRICANE ZONE (HVHZ).

1BY OR 2BY WOOD BUCKS BY OTHERS, MUST BE ANCHORED PROPERLY TO TRANSFER LOADS TO THE STRUCTURE.

ANCHORS SHALL BE AS LISTED, SPACED AS SHOWN ON DETAILS, ANCHORS EMBEDMENT TO BASE MATERIAL SHALL BE BEYOND WALL DRESSING OR STUCCO.

ANCHORING OR LOADING CONDITIONS NOT SHOWN IN THESE DETAILS ARE NOT PART OF THIS APPROVAL.

A LOAD DURATION INCREASE IS USED IN DESIGN OF ANCHORS INTO WOOD ONLY.

MATERIALS INCLUDING BUT NOT LIMITED TO STEEL/METAL SCREWS, THAT COME INTO CONTACT WITH OTHER DISSIMILAR MATERIALS SHALL MEET THE REQUIREMENTS OF 2007 FLORIDA BLDG. CODE SECTION 2003.8.4.

THESE DOORS ARE RATED FOR SMALL MISSILE IMPACT.
MIAMI-DADE COUNTY APPROVED IMPACT RESISTANT SHUTTERS REQUIRED FOR INSTALLATIONS UP TO 30 FT. OF GRADE.
SHUTTERS NOT REQD. FOR INSTALLATIONS ABOVE 30 FT. OF GRADE.

Engr: ARSHAD VIQAR
CIVIL
FLA. PE # 38863
C.A.N. 3538

OCT 05 2009

PRODUCT REVISED
as complying with the Florida Building Code
Acceptance No 08-1119.07
Expiration Date FEBRUARY 07, 2012
By
Miami Dade Product Control Division

AL-FAROOQ CORPORATION
ENGINEERS & PRODUCT DEVELOPMENT
1235 S.W. 87 AVE
MIAMI, FLORIDA 33174
TEL. (305) 264-8100 FAX. (305) 262-6978

COMP-ANL\W01-54RC

SERIES-2400ST ALUM SLD. GLASS DOOR (S.M.I.)

R.C. ALUMINUM INDUSTRIES INC.
2805 N.W. 75 TH AVE.
MIAMI, FL. 33122
TEL. (305) 592-1515 FAX. (305) 592-2184

revisions:

no	date	by	description
I	01.24.08		NO CHANGE THIS SHEET
J	11.11.08		UPDATED FOR 2007 FBC
K	12.31.08		REV. PER BCCO COMMENTS
L	08.21.09		NO CHANGE THIS SHEET
M	09.14.09		NO CHANGE THIS SHEET

date: 08-17-01
scale: 1/2"=1'-0"
dr. by: HAMID
chk. by:

drawing no.
W01-54

sheet 1 of 9

DESIGN LOAD CAPACITY – PSF

PANEL WIDTH NOMINAL INCHES	DOOR HEIGHT INCHES	GLASS TYPE 'A'		GLASS TYPE 'B'		GLASS TYPE 'C'	
		EXT.(+)	INT.(–)	EXT.(+)	INT.(–)	EXT.(+)	INT.(–)
30	96	131.0	142.0	120.0	120.0	131.0	131.0
36		131.0	142.0	120.0	120.0	131.0	131.0
42		131.0	142.0	120.0	120.0	131.0	131.0
48		131.0	142.0	120.0	120.0	131.0	131.0
54		131.0	131.0	120.0	120.0	131.0	131.0
60		131.0	131.0	120.0	120.0	131.0	131.0
30	102	131.0	142.0	120.0	120.0	131.0	131.0
36		131.0	142.0	120.0	120.0	131.0	131.0
42		131.0	142.0	120.0	120.0	131.0	131.0
48		131.0	131.0	120.0	120.0	131.0	131.0
54		131.0	131.0	120.0	120.0	131.0	131.0
60		–	–	–	–	120.0	120.0
30	103–3/8	131.0	142.0	120.0	120.0	131.0	131.0
36		131.0	142.0	120.0	120.0	131.0	131.0
42		131.0	142.0	120.0	120.0	131.0	131.0
44		131.0	142.0	120.0	120.0	131.0	131.0
30	108	131.0	131.0	120.0	120.0	131.0	131.0
36		131.0	131.0	120.0	120.0	131.0	131.0
42		131.0	131.0	120.0	120.0	131.0	131.0
48		131.0	131.0	120.0	120.0	131.0	131.0
54		–	–	–	–	131.0	131.0
30	114	131.0	131.0	120.0	120.0	131.0	131.0
36		131.0	131.0	120.0	120.0	131.0	131.0
42		131.0	131.0	120.0	120.0	131.0	131.0
48		131.0	131.0	120.0	120.0	131.0	131.0
54		–	–	–	–	120.0	120.0
30	119–1/2	131.0	131.0	120.0	120.0	131.0	131.0
36		131.0	131.0	120.0	120.0	131.0	131.0
42		131.0	131.0	120.0	120.0	131.0	131.0
48		128.7	128.7	120.0	120.0	131.0	131.0
30	120	120.0	120.0	120.0	120.0	131.0	131.0
36		120.0	120.0	120.0	120.0	131.0	131.0
42		120.0	120.0	120.0	120.0	131.0	131.0
48		120.0	120.0	120.0	120.0	131.0	131.0
30	126	120.0	120.0	120.0	120.0	120.0	120.0
36		120.0	120.0	120.0	120.0	120.0	120.0
42		120.0	120.0	120.0	120.0	120.0	120.0
48		–	–	120.0	120.0	120.0	120.0
30	132	120.0	120.0	120.0	120.0	120.0	120.0
36		120.0	120.0	120.0	120.0	120.0	120.0
42		120.0	120.0	120.0	120.0	120.0	120.0
48		–	–	120.0	120.0	120.0	120.0

NOTE:
GLASS CAPACITIES ON THIS SHEET ARE BASED ON ASTM E1300–02/04 (3 SEC. GUSTS) AND FLORIDA BUILDING COMMISSION DECLARATORY STATEMENT DCA05–DEC–219

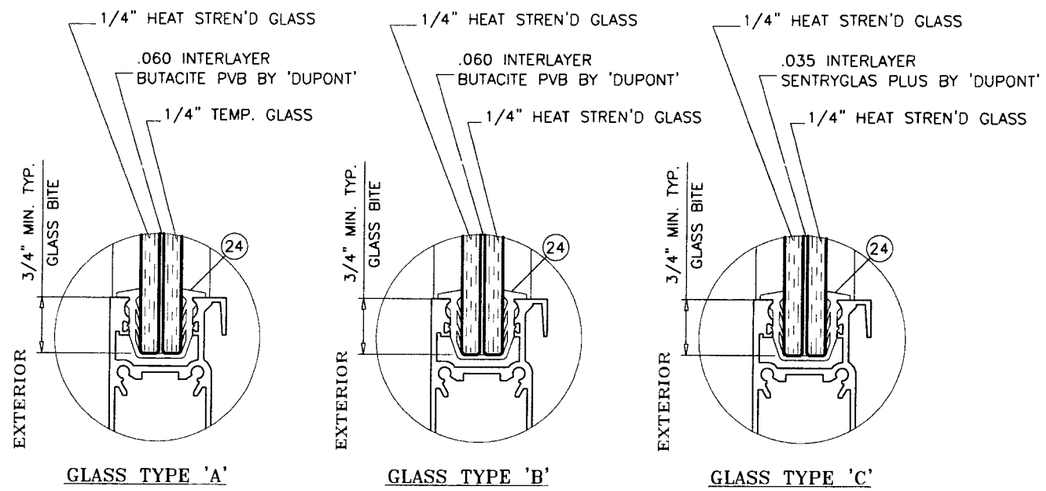

GLAZING OPTIONS

NOTE:
ON DOORS WITH NOMINAL PANEL WIDTHS GREATER THAN 48 INCHES LIMIT EXTERIOR(+) DESIGN LOADS TO +120.0 PSF.

Engr: ARSHAD VIQAR
CIVIL
FLA. PE # 38863
C.A.N. 3538

OCT 05 2009

PRODUCT REVISED
as complying with the Florida Building Code
Acceptance No 08-1119.09
Expiration Date FEBRUARY 07, 2012
By
Miami Dade Product Control Division

AL-FAROOQ CORPORATION
ENGINEERS & PRODUCT DEVELOPMENT
1235 S.W. 87 AVE
MIAMI, FLORIDA 33174
TEL. (305) 264-8100 FAX. (305) 262-6978

COMP-ANL\W01-54RC

SERIES-2400ST ALUM SLD. GLASS DOOR (S.M.I.)

R.C. ALUMINUM INDUSTRIES INC.
2805 N.W. 75 TH AVE.
MIAMI, FL. 33122
TEL. (305) 592-1515 FAX. (305) 592-2184

revisions:

no	date	by	description
I	01.24.08		NO CHANGE THIS SHEET
J	11.11.08		UPDATED FOR 2007 FBC
K	12.31.08		REV. PER BCCO COMMENTS
L	08.21.09		REV. PER BCCO COMMENTS
M	09.14.09		REV. PER BCCO COMMENTS

date: 08-17-01
scale: 1/2"=1'-0"
dr. by: HAMID
chk. by:

drawing no.
W01-54

DESIGN LOAD CAPACITY - PSF (HEAD ANCHORS)

PANEL WIDTH NOMINAL INCHES	DOOR HEIGHT INCHES	ANCHORS TYPE A & B 1/2" MAX. SHIM SPACE			ANCHORS TYPE B 1/4" MAX. SHIM SPACE		ANCHORS TYPE B 3/8" MAX. SHIM SPACE		ANCHORS TYPE C 1/4" MAX. SHIM SPACE			ANCHORS TYPE C 3/8" MAX. SHIM SPACE			ANCHORS TYPE C 1/2" MAX. SHIM SPACE		
		2 ANCHORS AT FREE STAND. JAMB	3 ANCHORS AT FREE STAND. JAMB	4 ANCHORS AT FREE STAND. JAMB	2 ANCHORS AT FREE STAND. JAMB	3 ANCHORS AT FREE STAND. JAMB	2 ANCHORS AT FREE STAND. JAMB	3 ANCHORS AT FREE STAND. JAMB	2 ANCHORS AT FREE STAND. JAMB	3 ANCHORS AT FREE STAND. JAMB	4 ANCHORS AT FREE STAND. JAMB	3 ANCHORS AT FREE STAND. JAMB	4 ANCHORS AT FREE STAND. JAMB	5 ANCHORS AT FREE STAND. JAMB	4 ANCHORS AT FREE STAND. JAMB	5 ANCHORS AT FREE STAND. JAMB	6 ANCHORS AT FREE STAND. JAMB
		4 ANCHORS AT MTG. STILE ENDS	6 ANCHORS AT MTG. STILE ENDS	8 ANCHORS AT MTG. STILE ENDS	4 ANCHORS AT MTG. STILE ENDS	6 ANCHORS AT MTG. STILE ENDS	4 ANCHORS AT MTG. STILE ENDS	6 ANCHORS AT MTG. STILE ENDS	4 ANCHORS AT MTG. STILE ENDS	6 ANCHORS AT MTG. STILE ENDS	8 ANCHORS AT MTG. STILE ENDS	6 ANCHORS AT MTG. STILE ENDS	8 ANCHORS AT MTG. STILE ENDS	10 ANCHORS AT MTG. STILE ENDS	8 ANCHORS AT MTG. STILE ENDS	10 ANCHORS AT MTG. STILE ENDS	12 ANCHORS AT MTG. STILE ENDS
		EXT. (+) INT. (-)	EXT. (+) INT. (-)	EXT. (+) INT. (-)	EXT. (+) INT. (-)	EXT. (+) INT. (-)	EXT. (+) INT. (-)	EXT. (+) INT. (-)	EXT. (+) INT. (-)	EXT. (+) INT. (-)	EXT. (+) INT. (-)	EXT. (+) INT. (-)	EXT. (+) INT. (-)	EXT. (+) INT. (-)	EXT. (+) INT. (-)	EXT. (+) INT. (-)	EXT. (+) INT. (-)
30	96	142.0	142.0	142.0	142.0	142.0	142.0	142.0	142.0	142.0	142.0	142.0	142.0	142.0	142.0	142.0	142.0
36		126.4	142.0	142.0	142.0	142.0	142.0	142.0	131.7	142.0	142.0	127.3	142.0	142.0	138.8	142.0	142.0
42		108.4	142.0	142.0	142.0	142.0	132.6	142.0	112.9	142.0	142.0	109.1	142.0	142.0	119.0	142.0	142.0
48		94.8	142.0	142.0	142.0	142.0	116.0	142.0	98.8	142.0	142.0	95.5	127.4	142.0	104.1	130.2	142.0
54		84.3	126.4	142.0	128.9	142.0	103.1	142.0	87.8	131.7	142.0	84.9	113.2	141.6	92.6	115.7	138.8
60		75.9	113.8	142.0	116.0	142.0	92.8	139.3	79.0	118.5	142.0	76.4	101.9	127.4	83.3	104.2	125.0
30	102	142.0	142.0	142.0	142.0	142.0	142.0	142.0	142.0	142.0	142.0	142.0	142.0	142.0	142.0	142.0	142.0
36		119.0	142.0	142.0	142.0	142.0	142.0	142.0	123.9	142.0	142.0	119.8	142.0	142.0	130.7	142.0	142.0
42		102.0	142.0	142.0	142.0	142.0	124.8	142.0	106.2	142.0	142.0	102.7	137.0	142.0	112.0	140.0	142.0
48		89.2	133.9	142.0	136.5	142.0	109.2	142.0	92.9	139.4	142.0	89.9	119.9	142.0	98.0	122.5	142.0
54		79.3	119.0	142.0	121.3	142.0	97.0	142.0	82.6	123.9	142.0	79.9	106.6	133.2	87.1	108.9	130.7
60		71.4	107.1	142.0	109.2	142.0	87.3	131.1	74.4	111.5	142.0	71.9	95.9	119.9	78.4	98.0	117.6
30	103-3/8	140.9	142.0	142.0	142.0	142.0	142.0	142.0	142.0	142.0	142.0	141.9	142.0	142.0	142.0	142.0	142.0
36		117.4	142.0	142.0	142.0	142.0	142.0	142.0	122.3	142.0	142.0	118.2	142.0	142.0	128.9	142.0	142.0
42		100.6	142.0	142.0	142.0	142.0	123.1	142.0	104.8	142.0	142.0	101.4	135.2	142.0	110.5	138.2	142.0
44		96.1	142.0	142.0	146.9	142.0	117.5	142.0	100.0	142.0	142.0	96.7	129.0	142.0	105.5	131.9	142.0
30	108	134.8	142.0	142.0	142.0	142.0	142.0	142.0	140.4	142.0	142.0	135.8	142.0	142.0	142.0	142.0	142.0
36		112.4	142.0	142.0	142.0	142.0	137.5	142.0	117.0	142.0	142.0	113.2	142.0	142.0	123.4	142.0	142.0
42		96.3	142.0	142.0	142.0	142.0	117.8	142.0	100.3	142.0	142.0	97.0	129.4	142.0	105.8	132.3	142.0
48		84.3	126.4	142.0	128.9	142.0	103.1	142.0	87.8	131.7	142.0	84.9	113.2	141.6	92.6	115.7	138.8
54		74.9	112.4	142.0	114.6	142.0	91.7	137.5	78.0	117.0	142.0	75.5	100.6	125.8	82.3	102.9	123.4
30	114	127.7	142.0	142.0	142.0	142.0	142.0	142.0	133.1	142.0	142.0	128.7	142.0	142.0	140.3	142.0	142.0
36		106.5	142.0	142.0	142.0	142.0	130.2	142.0	110.9	142.0	142.0	107.2	142.0	142.0	116.9	142.0	142.0
42		91.2	136.9	142.0	142.0	142.0	111.6	142.0	95.0	142.0	142.0	91.9	122.6	142.0	100.2	125.3	142.0
48		79.8	119.8	142.0	122.1	142.0	97.7	142.0	83.2	124.7	142.0	80.4	107.3	134.1	87.7	109.6	131.5
54		71.0	106.5	141.9	108.5	142.0	86.8	130.3	73.9	110.9	142.0	71.5	95.3	119.2	77.9	97.5	116.9
30	119-1/2	121.9	142.0	142.0	142.0	142.0	142.0	142.0	126.9	142.0	142.0	122.8	142.0	142.0	133.8	142.0	142.0
36		101.6	142.0	142.0	142.0	142.0	124.3	142.0	105.8	142.0	142.0	102.3	136.4	142.0	111.5	139.4	142.0
42		87.0	130.6	142.0	133.1	142.0	106.5	142.0	90.7	136.0	142.0	87.7	116.9	142.0	95.6	119.5	142.0
48		76.2	114.3	142.0	116.5	142.0	93.2	139.8	79.3	119.0	142.0	76.7	102.3	127.9	83.6	104.6	125.5
30	120	121.4	142.0	142.0	142.0	142.0	142.0	142.0	126.4	142.0	142.0	122.2	142.0	142.0	133.3	142.0	142.0
36		101.1	142.0	142.0	142.0	142.0	123.7	142.0	105.3	142.0	142.0	101.9	135.9	142.0	111.1	138.9	142.0
42		86.7	130.1	142.0	132.6	142.0	106.1	142.0	90.3	135.4	142.0	87.3	116.5	142.0	95.2	119.0	142.0
48		75.9	113.8	142.0	116.0	142.0	92.8	139.3	79.0	118.5	142.0	76.4	101.9	127.4	83.3	104.2	125.0
30	126	115.6	142.0	142.0	142.0	142.0	141.4	142.0	120.4	142.0	142.0	116.4	142.0	142.0	126.9	142.0	142.0
36		96.3	142.0	142.0	142.0	142.0	117.8	142.0	100.3	142.0	142.0	97.0	129.4	142.0	105.8	132.3	142.0
42		82.6	123.9	142.0	126.3	142.0	101.0	142.0	86.0	129.0	142.0	83.2	110.9	138.7	90.7	113.4	136.0
48		72.2	108.4	142.0	110.5	142.0	88.4	132.6	75.2	112.9	142.0	72.8	97.0	121.3	79.3	99.2	119.0
30	132	110.3	142.0	142.0	142.0	142.0	135.0	142.0	114.9	142.0	142.0	111.1	142.0	142.0	121.2	142.0	142.0
36		91.9	142.0	142.0	140.6	142.0	112.5	142.0	95.8	142.0	142.0	92.6	123.5	142.0	101.0	126.2	142.0
42		78.8	118.2	142.0	120.5	142.0	96.4	142.0	82.1	123.1	142.0	79.4	105.9	132.4	86.5	108.2	129.8
48		69.0	103.5	137.9	105.5	142.0	84.4	126.6	71.8	107.7	142.0	69.5	92.6	115.8	75.7	94.7	113.6

DESIGN LOAD CAPACITY - PSF SILL ANCHORS

PANEL WIDTH NOMINAL INCHES	DOOR HEIGHT INCHES	2 ANCHORS AT FREE STAND. JAMB	3 ANCHORS AT FREE STAND. JAMB
		4 ANCHORS AT MTG. STILE ENDS	6 ANCHORS AT MTG. STILE ENDS
		EXT. (+) INT. (-)	EXT. (+) INT. (-)
30	96	142.0	142.0
36		142.0	142.0
42		134.0	142.0
48		117.3	142.0
54		104.2	142.0
60		93.8	140.7
30	102	142.0	142.0
36		142.0	142.0
42		126.1	142.0
48		110.4	142.0
54		98.1	142.0
60		88.3	132.4
30	103-3/8	142.0	142.0
36		142.0	142.0
42		124.4	142.0
44		118.8	142.0
30	108	142.0	142.0
36		139.0	142.0
42		119.1	142.0
48		104.2	142.0
54		92.6	139.0
30	114	142.0	142.0
36		131.6	142.0
42		112.8	142.0
48		98.7	142.0
54		87.8	131.6
30	119-1/2	142.0	142.0
36		125.6	142.0
42		107.6	142.0
48		94.2	141.3
30	120	142.0	142.0
36		125.1	142.0
42		107.2	142.0
48		93.8	140.7
30	126	142.0	142.0
36		119.1	142.0
42		102.1	142.0
48		89.3	134.0
30	132	136.4	142.0
36		113.7	142.0
42		97.5	142.0
48		85.3	127.9

NOTE:
SEE SHEET 2 FOR DESIGN LOAD CAPACITY OF DESIRED GLASS SIZE.
USING CHART ON THIS SHEET SELECT ANCHOR OPTION WITH DESIGN RATING MORE THAN DESIGN LOADS REQUIRED.
LOWER DESIGN PRESSURES FROM GLASS OR HEAD OR SILL ANCHOR CHARTS WILL APPLY TO ENTIRE SYSTEM.

Engr: ARSHAD VIQAR
CIVIL
FLA PE # 38863
C.A.N. 3538

OCT 05 2009

PRODUCT REVISED
as complying with the Florida Building Code
Acceptance No 08-1119.07
Expiration Date FEBRUARY 07, 2012
By
Miami Dade Product Control Division

AL-FAROOQ CORPORATION
ENGINEERS & PRODUCT DEVELOPMENT
1235 S.W. 87 AVE
MIAMI, FLORIDA 33174
TEL. (305) 264-8100 FAX. (305) 262-6978
COMP-ANL\W01-54RC

SERIES-2400ST ALUM SLD. GLASS DOOR (S.M.I.)

R.C. ALUMINUM INDUSTRIES INC.
2805 N.W. 75 TH AVE.
MIAMI, FL. 33122
TEL. (305) 592-1515 FAX. (305) 592-2184

revisions:

no	date	by	description
I	01.24.08		NO CHANGE THIS SHEET
J	11.11.08		UPDATED FOR 2007 FBC
K	12.31.08		REV. PER BCCO COMMENTS
L	08.21.09		NO CHANGE THIS SHEET
M	09.14.09		REV. PER BCCO COMMENTS

date: 08-17-01
scale: 1/2"=1'-0"
dr. by: HAMID
chk. by:

drawing no.
W01-54

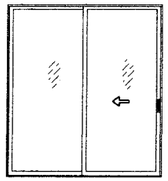

OX (SHOWN)
XO

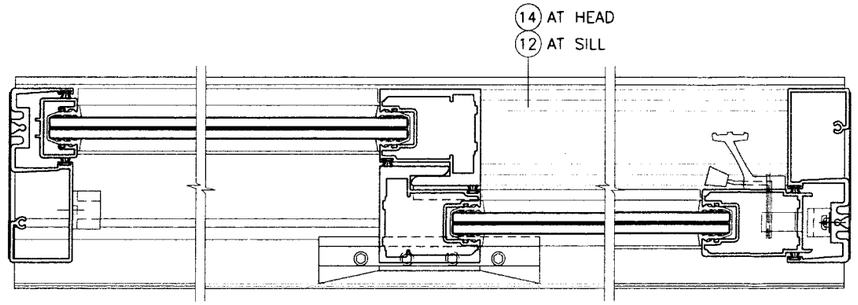

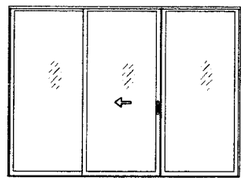

OXO

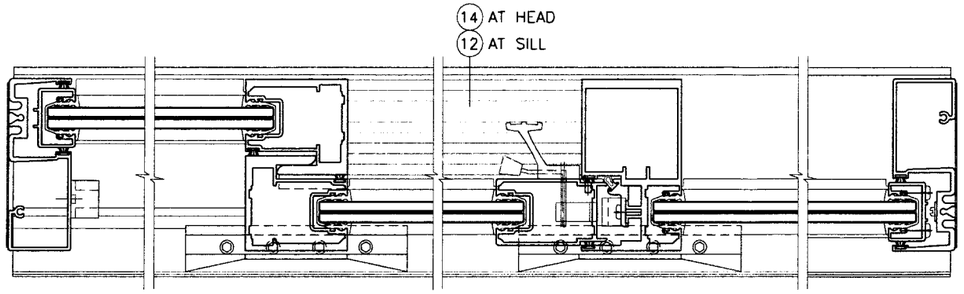

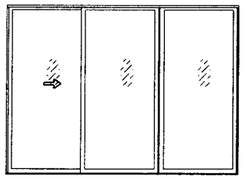

XOO (SHOWN)
OOX

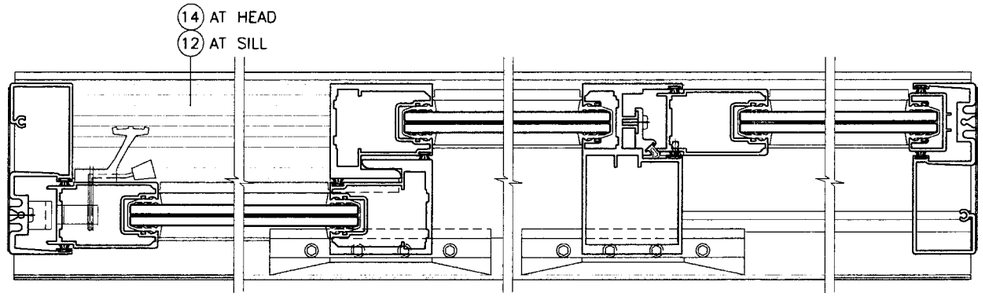

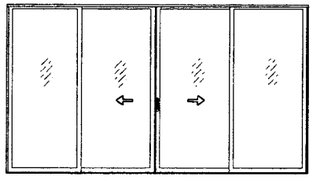

OXXO

APPROVED CONFIGURATIONS

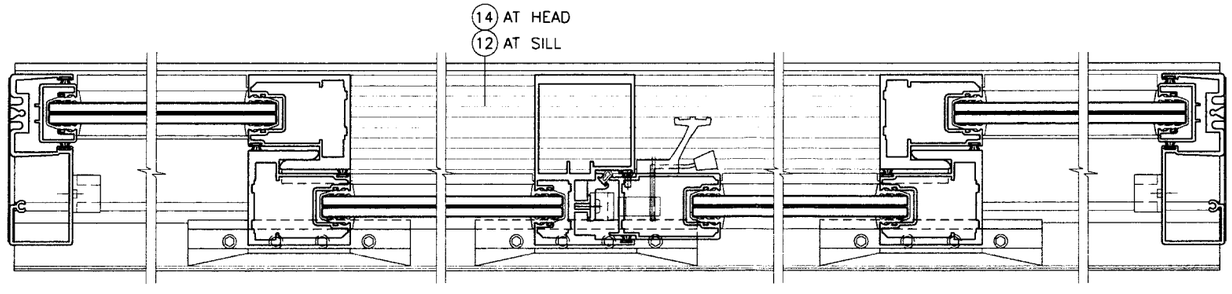

Engr: ARSHAD VIQAR
CIVIL
FLA. PE # 38863
C.A.N. 3538

OCT 05 2009

PRODUCT REVISED
as complying with the Florida
Building Code
Acceptance No 08-1119.07
Expiration Date FEBRUARY 07, 2012
By
Miami Dade Product Control
Division

AL-FAROOQ CORPORATION
ENGINEERS & PRODUCT DEVELOPMENT
1235 S.W. 87 AVE
MIAMI, FLORIDA 33174
TEL. (305) 264-8100 FAX. (305) 262-6978

COMP-ANL\W01-54RC

SERIES-2400ST ALUM SLD. GLASS DOOR (S.M.I.)

R.C. ALUMINUM INDUSTRIES INC.
2805 N.W. 75 TH AVE.
MIAMI, FL. 33122
TEL. (305) 592-1515 FAX. (305) 592-2184

revisions:

no	date	by	description
M	09.14.09		REV. PER BCCO COMMENTS

date: 08-17-01
scale: -
dr. by: HAMID
chk. by:

drawing no.
W01-54

sheet 3.1 of 9

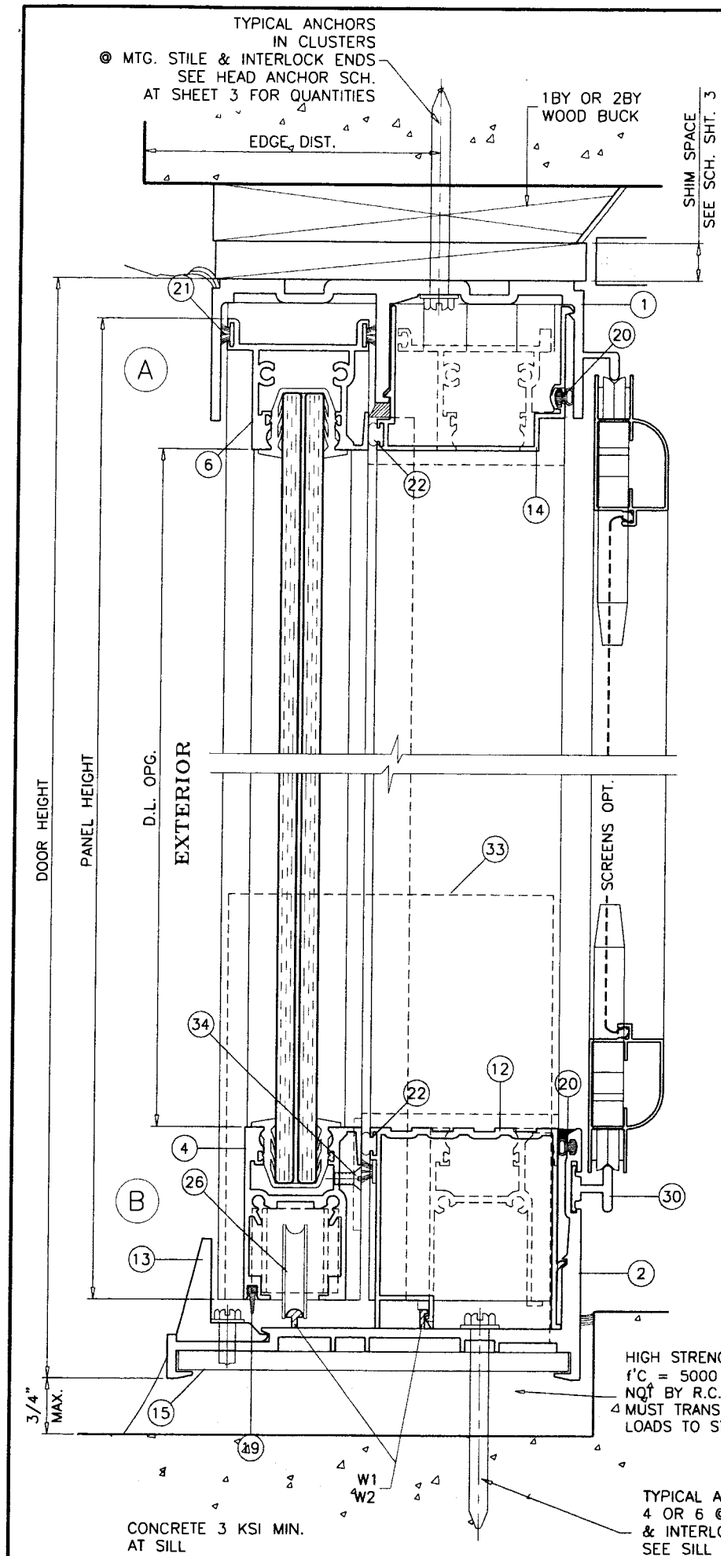

1BY OR 2BY WOOD BUCKS AND METAL STRUCTURES NOT BY RC ALUM MUST SUPPORT LOADS IMPOSED BY GLAZING SYSTEM AND TRANSFER THEM TO THE BUILDING STRUCTURE.

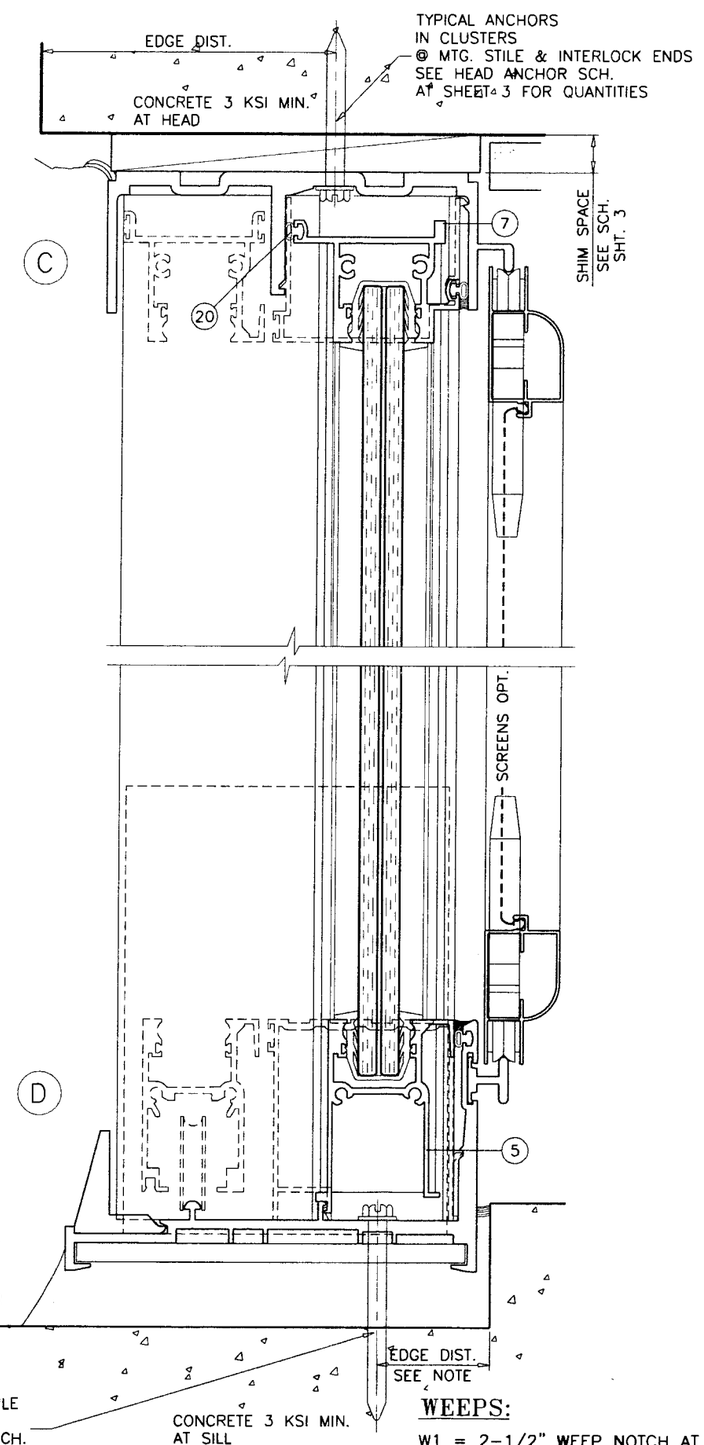

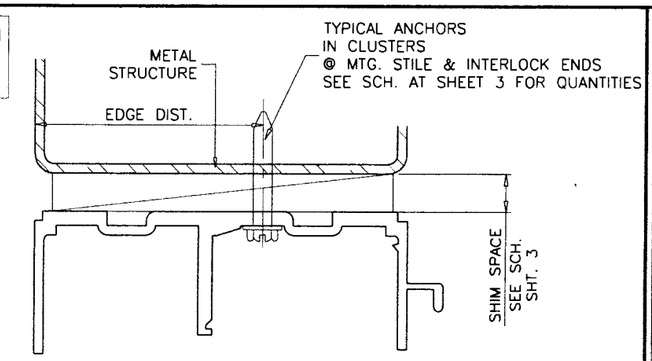

TYPICAL ANCHORS: SEE ELEV. FOR SPACING

AT HEAD

TYPE 'A'

1/4" X 2-3/4" DIA HILTI KWIK-CON II (Fu=163 KSI, Fy=157 KSI)
THRU 1BY OR 2BY WOOD BUCKS INTO CONCRETE

TYPE 'B'

1/4" X 2-3/4" DIA HILTI KWIK-CON II
DIRECTLY INTO CONCRETE, 1-3/4" MIN. EMBEDMENT

TYPE 'C'

1/4" TEKS OR SELF DRILLING SCREWS (Fu=92 KSI, Fy=120 KSI)
INTO METAL STRUCTURES OR APPROVED MULLIONS
STEEL : 1/8" THK. MIN. (Fy = 36 KSI MIN.)
ALUMINUM : 1/8" THK. MIN. (6063-T5 MIN.)
(STEEL IN CONTACT WITH ALUMINUM TO BE PLATED OR PAINTED)

AT SILL

1/4" DIA HILTI KWIK-CON II (Fu=163 KSI, Fy=157 KSI)
DIRECTLY INTO CONCCRETE, 1-3/8" MIN. EMBEDMENT

AT JAMBS

1/4" DIA. HILTI KWIK-CON II (Fu=163 KSI, Fy=157 KSI)
THRU 1BY BUCKS, 1-1/4" MIN. CONC. OR MASONRY EMBED.
INTO 2BY BUCKS, 1-1/8" MIN. WOOD EMBEDMENT
DIRECTLY INTO MASONRY OR CONCRETE
1-1/4" MIN. MASONRY OR CONCRETE EMBEDMENT

1/4" TEKS OR SELF DRILLING SCREWS (Fu=92 KSI, Fy=120 KSI)
INTO METAL STRUCTURES OR APPROVED MULLIONS
STEEL : 1/8" THK. MIN. (Fy = 36 KSI MIN.)
ALUMINUM : 1/8" THK. MIN. (6063-T5 MIN.)
(STEEL IN CONTACT WITH ALUMINUM TO BE PLATED OR PAINTED)

ANCHOR EDGE DISTANCES

INTO CONCRETE = 2-1/2" MIN.
INTO WOOD STRUCTURE = 1" MIN.
INTO METAL STRUCTURE = 3/4" MIN.

CONCRETE AT HEAD, SILL OR JAMBS f'c = 3000 PSI MIN.
C-90 HOLLOW/FILLED BLOCK AT JAMBS f'm = 1500 PSI MIN.

WEEPS:

W1 = 2-1/2" WEEP NOTCH AT SILL CENTER
W2 = 1" NOTCH AT EACH END

Engr: ARSHAD VIQAR
CIVIL
FLA. PE # 38863
C.A.N. 3538

OCT 05 2009

PRODUCT REVISED
as complying with the Florida
Building Code
Acceptance No 08-1119.07
Expiration Date FEBRUARY 07, 2012
By
Miami Dade Product Control
Division

AL-FAROOQ CORPORATION
ENGINEERS & PRODUCT DEVELOPMENT
1235 S.W. 87 AVE
MIAMI, FLORIDA 33174
TEL. (305) 264-8100 FAX. (305) 262-6978
COMP-ANL\W01-54RC

SERIES-2400ST ALUM SLD. GLASS DOOR (S.M.I.)

R.C. ALUMINUM INDUSTRIES INC.
2805 N.W. 75 TH AVE.
MIAMI, FL. 33122
TEL. (305) 592-1515 FAX. (305) 592-2184

revisions:

no	date	by	description
-	01.24.08		NO CHANGE THIS SHEET
J	11.11.08		UPDATED FOR 2007 FBC
K	12.31.08		REV. PER BCCO COMMENTS
L	08.21.09		REV. PER BCCO COMMENTS
M	09.14.09		REV. PER BCCO COMMENTS

date: 08-17-01
scale: 1/2" = 1"
dr. by: HAMID
chk. by:

drawing no.
W01-54

1BY OR 2BY WOOD BUCKS AND METAL STRUCTURES NOT BY RC ALUM MUST SUPPORT LOADS IMPOSED BY GLAZING SYSTEM AND TRANSFER THEM TO THE BUILDING STRUCTURE.

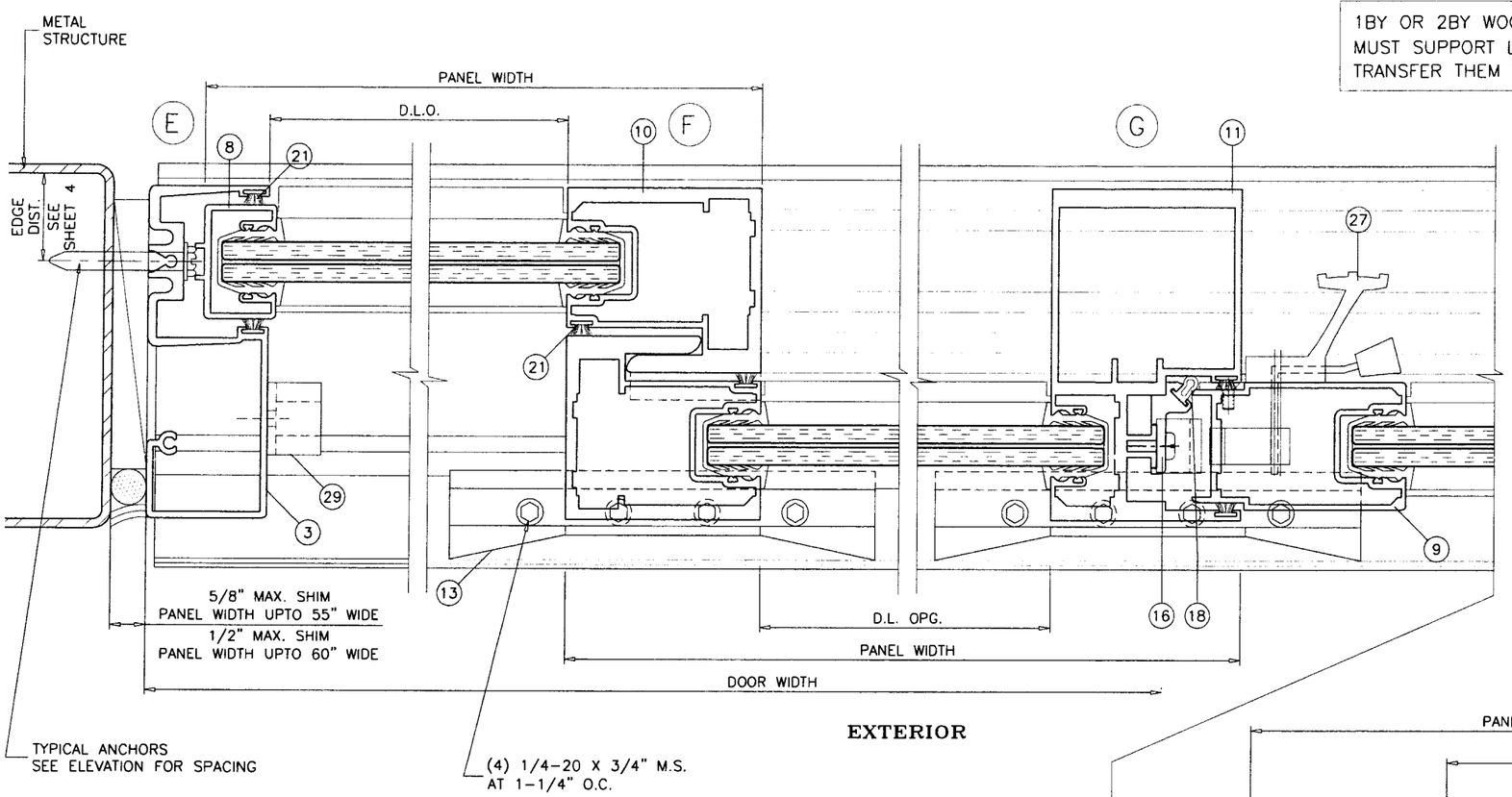

EXTERIOR

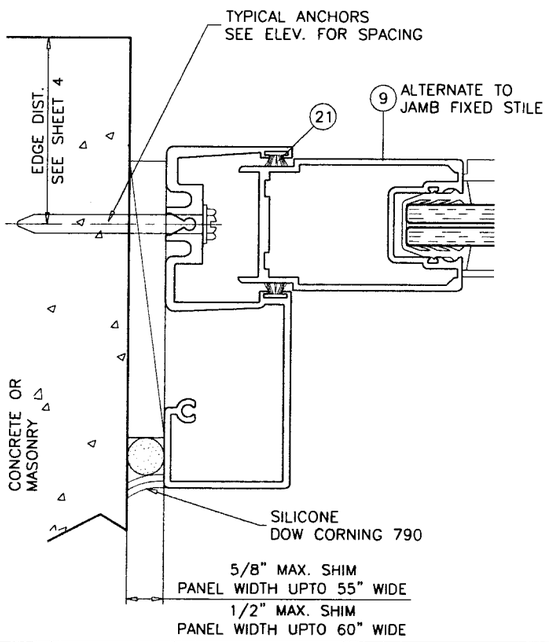

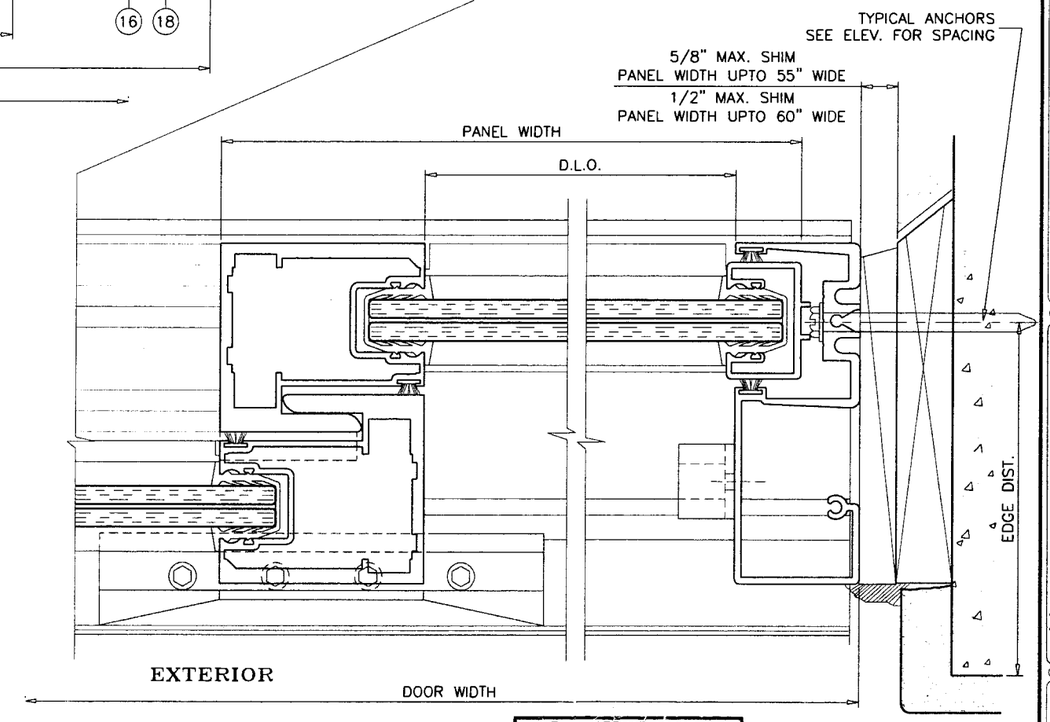

EXTERIOR

Engr: ARSHAD VIQAR
CIVIL
FLA. PE # 38863
C.A.N. 3538

OCT 05 2009

PRODUCT REVISED
as complying with the Florida
Building Code
Acceptance No 08-1119.07
Expiration Date FEBRUARY 07, 2012
By
Miami Dade Product Control
Division

AL-FAROOQ CORPORATION
ENGINEERS & PRODUCT DEVELOPMENT
1235 S.W. 87 AVE
MIAMI, FLORIDA 33174
TEL. (305) 264-8100 FAX. (305) 262-6978
COMP-ANL\W01-54RC

SERIES-2400ST ALUM SLD. GLASS DOOR (S.M.I.)

R.C. ALUMINUM INDUSTRIES INC.
2805 N.W. 75 TH AVE.
MIAMI, FL. 33122
TEL. (305) 592-1515 FAX. (305) 592-2184

revisions:

no	date	by	description
I	01.24.08		NO CHANGE THIS SHEET
J	11.11.08		UPDATED FOR 2007 FBC
K	12.31.08		REV. PER BCCO COMMENTS
L	08.21.09		REV. PER BCCO COMMENTS
M	09.14.09		REV. PER BCCO COMMENTS

date: 08-17-01
scale: 1/2" = 1"
dr. by: HAMID
chk. by:

drawing no.
W01-54

sheet 5 of 9

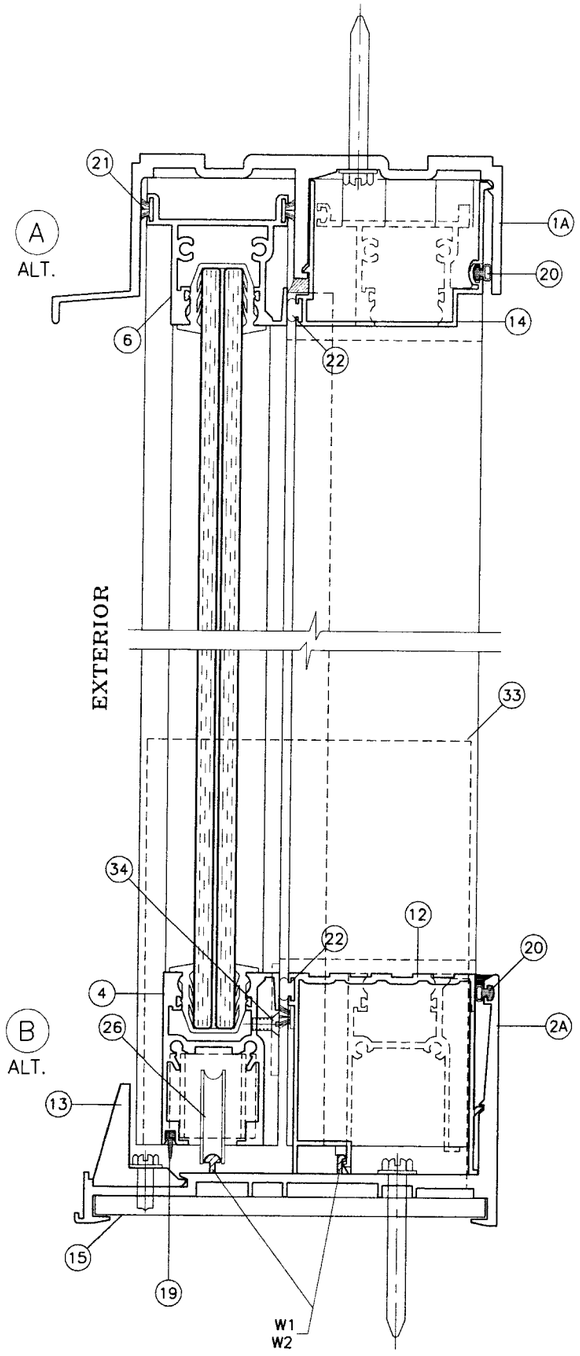

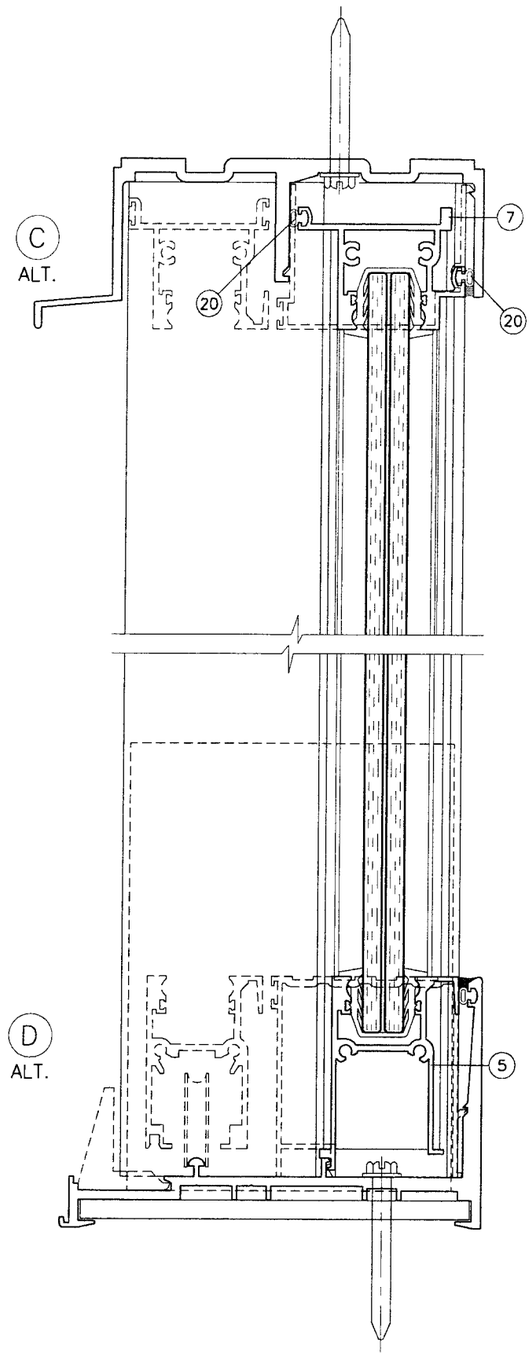

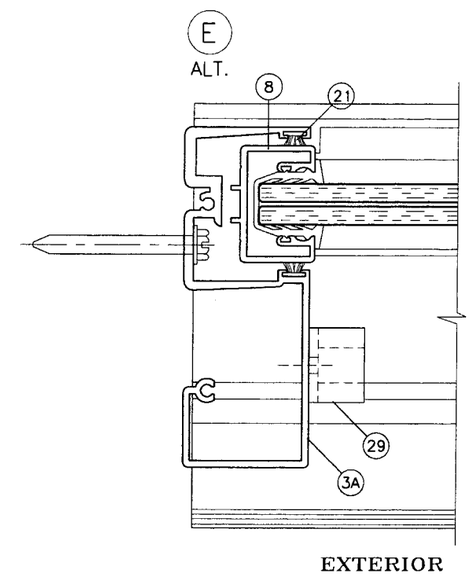

ILLUSTRATED ALTERNATE DOOR FRAMES (W/O SUBSTRATE)

THIS SHEET SHOWS ALTERNATE DOOR FRAMES WITH OUTSIDE SCREEN OPTION. HEAD/SILL/JAMB INSTALLATION FOR THESE FRAMES IS IDENTICAL TO STANDARD FRAMES INSTALLATION AS SHOWN ON SHEETS 4 AND 5.

Engr: ARSHAD VIQAR
CIVIL
FLA. PE # 38863
C.A.N. 3538

OCT 05 2009

PRODUCT REVISED
as complying with the Florida
Building Code
Acceptance No 08-1119.07
Expiration Date FEBRUARY 07, 2012
By
Miami Dade Product Control
Division

AL-FAROOQ CORPORATION
ENGINEERS & PRODUCT DEVELOPMENT
1235 S.W. 87 AVE
MIAMI, FLORIDA 33174
TEL. (305) 264-8100 FAX. (305) 262-6978
COMP-ANL\W01-54RC

SERIES-2400ST ALUM SLD. GLASS DOOR (S.M.I.)

R.C. ALUMINUM INDUSTRIES INC.
2805 N.W. 75 TH AVE.
MIAMI, FL. 33122
TEL. (305) 592-1515 FAX. (305) 592-2184

(revisions:

no	date	by	description
I	01.24.08		REV. PER BCCO COMMENTS
J	11.11.08		UPDATED FOR 2007 FBC
K	12.31.08		REV. PER BCCO COMMENTS
L	08.21.09		NO CHANGE THIS SHEET
M	09.14.09		NO CHANGE THIS SHEET

date: 08-17-01
scale: 1/2" = 1"
dr. by: HAMID
chk. by:

drawing no.
W01-54

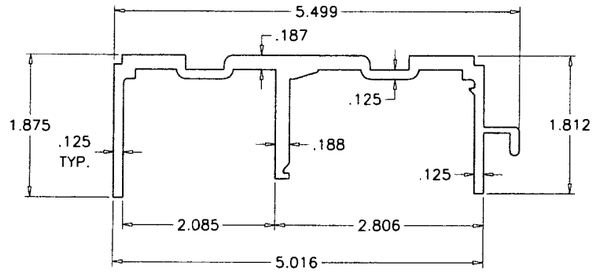

FRAME HEAD

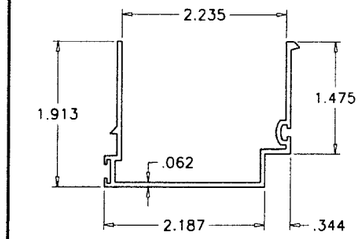

HEAD ADAPTER

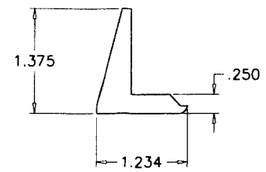

SILL ANCHOR

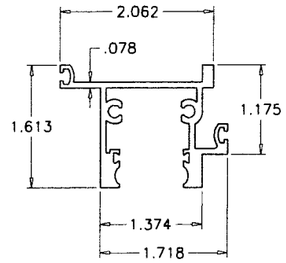

FIX. TOP RAIL

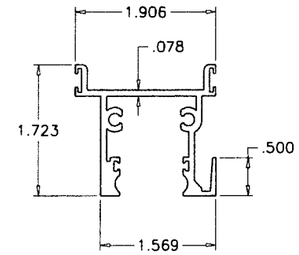

MOV. TOP RAIL

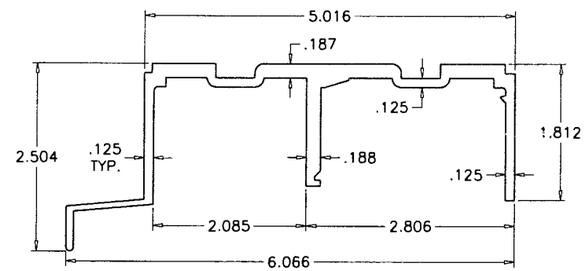

ALT. FRAME HEAD

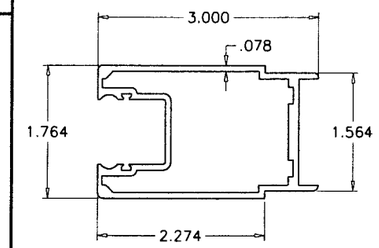

LOCK STILE

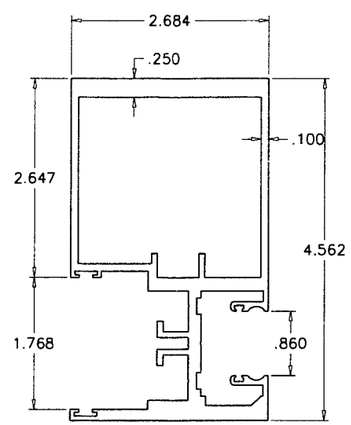

MTG. STILE

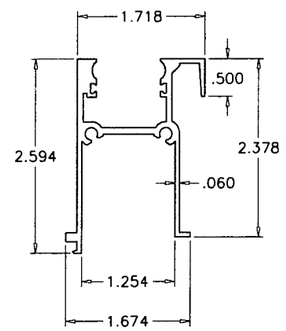

FIX. BOTTOM RAIL

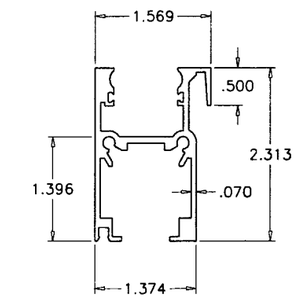

MOVING BOTTOM RAIL

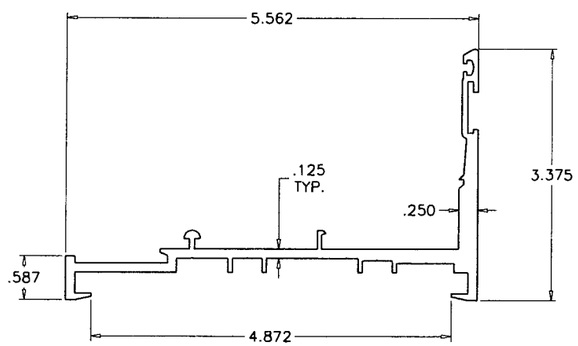

FRAME SILL

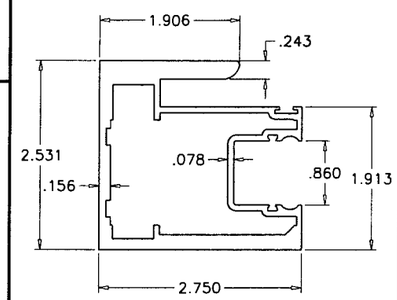

INTERLOCK

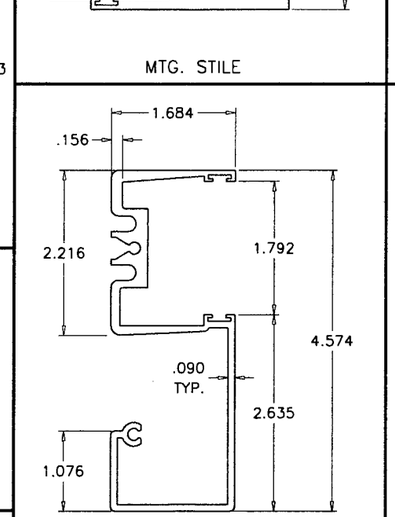

FRAME JAMB

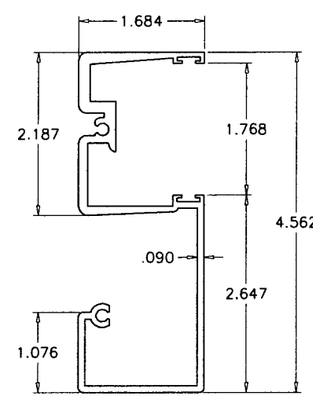

ALT. FRAME JAMB

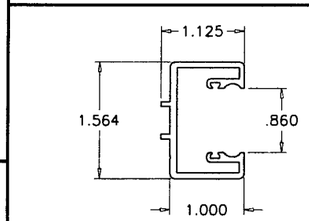

FIXED STILE

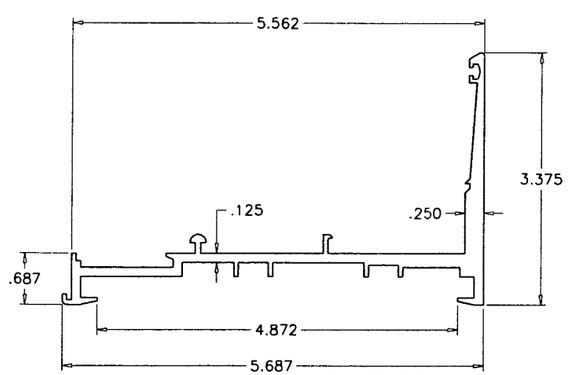

ALT. FRAME SILL

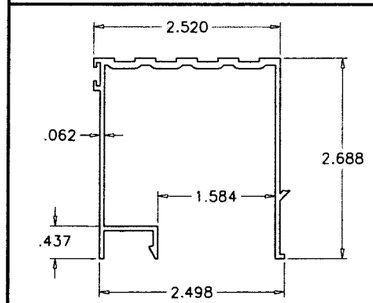

THRESHOLD

Engr: ARSHAD VIQAR
CIVIL
FLA. PE # 38863
C.A.N. 3538

OCT 05 2009

PRODUCT REVISED
as complying with the Florida
Building Code
Acceptance No 08-1119.07
Expiration Date FEBRUARY 07, 2012
By
Miami Dade Product Control
Division

AL-FAROOQ CORPORATION
ENGINEERS & PRODUCT DEVELOPMENT
1235 S.W. 87 AVE
MIAMI, FLORIDA 33174
TEL. (305) 264-8100 FAX. (305) 262-6978

COMP-ANL\W01-54RC

SERIES-2400ST ALUM SLD. GLASS DOOR (S.M.I.)

R.C. ALUMINUM INDUSTRIES INC.
2805 N.W. 75 TH AVE.
MIAMI, FL. 33122
TEL. (305) 592-1515 FAX. (305) 592-2184

revisions:

no	date	by	description
I	01.24.08		NO CHANGE THIS SHEET
J	11.11.08		UPDATED FOR 2007 FBC
K	12.31.08		REV. PER BCCO COMMENTS
L	08.21.09		REV. PER BCCO COMMENTS
M	09.14.09		NO CHANGE THIS SHEET

date: 08-17-01
scale: 1/2" = 1"
dr. by: HAMID
chk. by:

drawing no.
W01-54

sheet 7 of 9

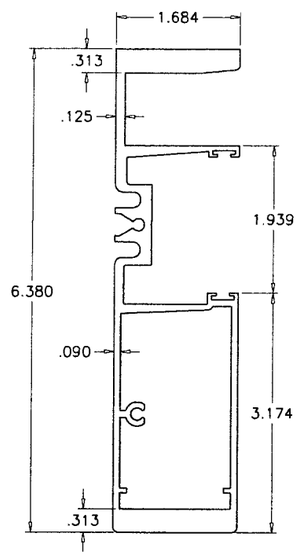

FREE STANDING FRAME JAMB
FIXED SIDE

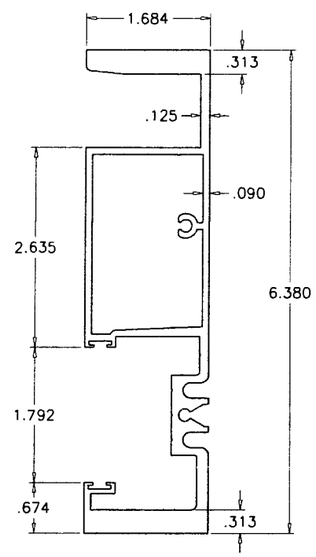

FREE STANDING FRAME JAMB
OPERABLE SIDE

ITEM NO.	PART NUMBER	QUANTITY	DESCRIPTION	MATERIAL	MANF./SUPPLIER/REMARKS
1	2400ST-038	1	FRAME HEAD	6063-T6/6005-T5	–
1A	2400ST-046	1	ALT. FRAME HEAD	6063-T6	–
2	2400ST-039	1	FRAME SILL	6005-T5	–
2A	2400ST-010	1	ALT. FRAME SILL	6005-T5	–
3	2400ST-042	2	FRAME JAMB	6063-T6	–
3A	2400ST-001	2	ALT. FRAME JAMB	6063-T6	–
4	2400ST-008	1/MOV. PANEL	MOVING HORIZ. BOTT. RAIL	6063-T6	–
5	2400ST-009	1/FIX. PANEL	FIXED HORIZ. BOTT. RAIL	6063-T6	–
6	2400ST-006	1/MOV. PANEL	TOP MOVING RAIL	6063-T6	–
7	2400ST-007	1/FIX. PANEL	TOP FIXED RAIL	6063-T6	–
8	2400ST-004	1/FIX. PANEL	JAMB FIXED STILE	6063-T6	–
9	2400ST-002	1	JAMB FIX. STILE/LOCK STILE	6063-T6	–
10	2400ST-037	1/ PANEL	INTERLOCK	6005-T5	–
11	2400ST-005	1	MEETING STILE	6005-T5	–
12	2400ST-012	1	THRESHOLD FILLING TRACK	6063-T6	LENGTH=OPG. W. BETWEEN FIXED PANELS
13	2400ST-011	–	SILL TRACK ANCHOR CLIP, 6" LONG	6005-T5	–
14	2400ST-019	1	HEAD ADAPTER	6063-T6	LENGTH=OPG. W. BETWEEN FIXED PANELS
15	2400ST-031	2	SILL TRACK PLATE (5-1/4" X 1/4" X 4" LONG)	ALUMINUM	AT EACH END
15A	2400ST-031	3	SILL TRACK PLATE (5-1/4" X 1/4" X 8" LONG)	ALUMINUM	AT INTERLOCK/ASTRAGAL STILES
16	2400ST-032	–	MTG. RAIL THRESHOLD SEAL	6063-T5	6" LONG
17	#10 X 1/2"	2	WEATHERSTRIP FASTENERS	–	–
18	V-027	–	BULB W'STRIPPING	VINYL	FP-712 PROTOTYPE
19	WV-2310	–	FLAP WEATHER SEAL	VINYL	WIBORG
20	V-026	–	BULB W'STRIPPING	VINYL	FP-198 PROTOTYPE
21	W31265NK	–	FIN PILE W'STRIPPING	–	ULTRAFAB
22	Q250X270	–	Q-LON W'STRIPPING	–	SCHLEGEL
24	V-022	AS REQD.	GLAZING GASKET (9/16" GLASS)	VINYL	–
26	100-7101	2/MOV. PANEL	TANDEM WHEEL ASSEMBLY	–	WORLD IND. PRODUCTS INTL.
27	10-0030XX	1	STANDARD SLIDE SET LOCK	–	WORLD IND. PRODUCTS INTL.
28	–	1	LOCK KEEPER	–	–
29	–	–	DOOR BUMPER	–	1" DIA. X 3/4" LONG
30	2400ST-040	AS REQD.	INSIDE SCREEN TRACK	6063-T6	–
31	#10 X 1-1/2"	2/ PANEL	PANEL ASSBY. SCREWS	ST/ST	–
32	#10 X 1"	2/ CORNER	FRAME ASSBY. SCREWS	–	–
33	–	2	4-1/4" X .060" X 6" LONG PLATE	ALUMINUM	AT FRAME JAMB BOTTOM
34	–	–	5/8" X 1-1/2" X .1" PLATE @ LOCK STILE BOTTOM	ALUMINUM	FASTENED W/ #8 X 3/8" FH SMS
35	2400ST-071	1	FREE STANDING JAMB (FIX. SIDE)	6005-T5	–
36	2400ST-072	1	FREE STANDING JAMB (OPERABLE SIDE)	6005-T5	–

SEALANTS:

ALL FRAME AND PANEL JOINT, INSTALLATION SCREWS AND HEADS OF ANCHOR SCREWS AT SILL TO BE SEALED WITH WHITE/ALUM COLORED SEALANT.

LOCKS:

SURFACE MOUNT THREE PLY HOOK LOCK BY 'WORLD INDUSTRIAL PRODUCTS' AT 41-1/2" FROM BOTTOM WITH KEEPERS AT LOCK POSITION.

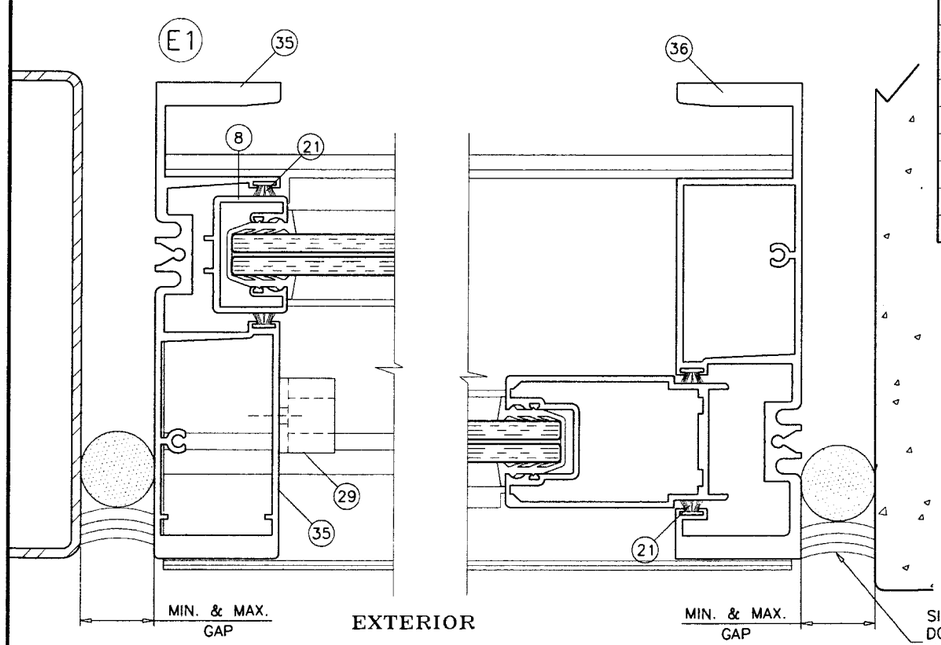

FREE STANDING JAMB
FIXED SIDE

FREE STANDING JAMB
OPERABLE SIDE

Engr: ARSHAD VIQAR
CIVIL
FLA. PE # 38863
C.A.N. 3538

OCT 05 2009

PRODUCT REVISED
as complying with the Florida
Building Code
Acceptance No 08-1119.07
Expiration Date FEBRUARY 07, 2012
By
Miami Dade Product Control
Division

AL-FAROOQ CORPORATION
ENGINEERS & PRODUCT DEVELOPMENT
1235 S.W. 87 AVE
MIAMI, FLORIDA 33174
TEL. (305) 264-8100 FAX. (305) 262-6978
COMP-ANL\W01-54RC

SERIES-2400ST ALUM SLD. GLASS DOOR (S.M.I.)

R.C. ALUMINUM INDUSTRIES INC.
2805 N.W. 75 TH AVE.
MIAMI, FL. 33122
TEL. (305) 592-1515 FAX. (305) 592-2184

revisions:

no	date	by	description
J	11.11.08		UPDATED FOR 2007 FBC
K	12.31.08		REV. PER BCCO COMMENTS
L	08.21.09		NO CHANGE THIS SHEET
M	09.14.09		REV. PER BCCO COMMENTS

date: 08-17-01
scale: 1/2" = 1"
dr. by: HAMID
chk. by:

drawing no.
W01-54

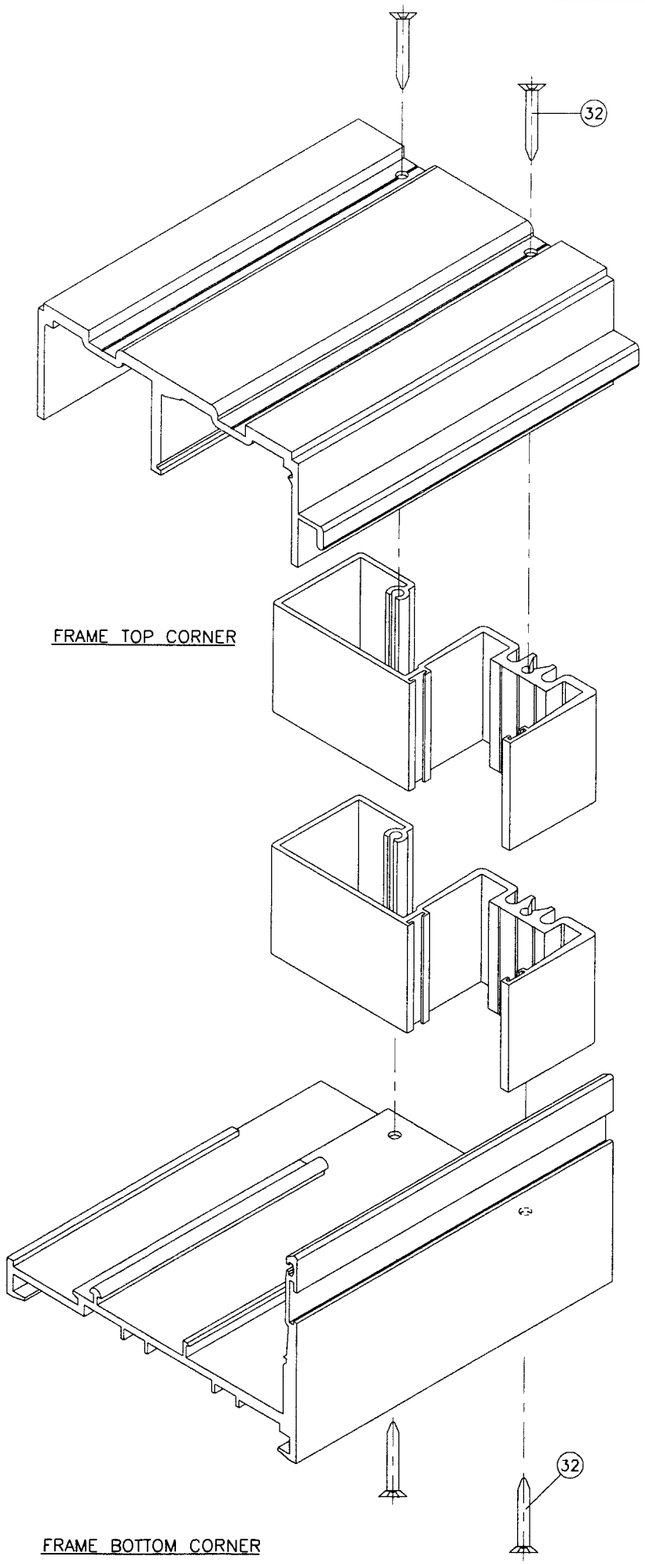

FRAME TOP CORNER

FRAME BOTTOM CORNER

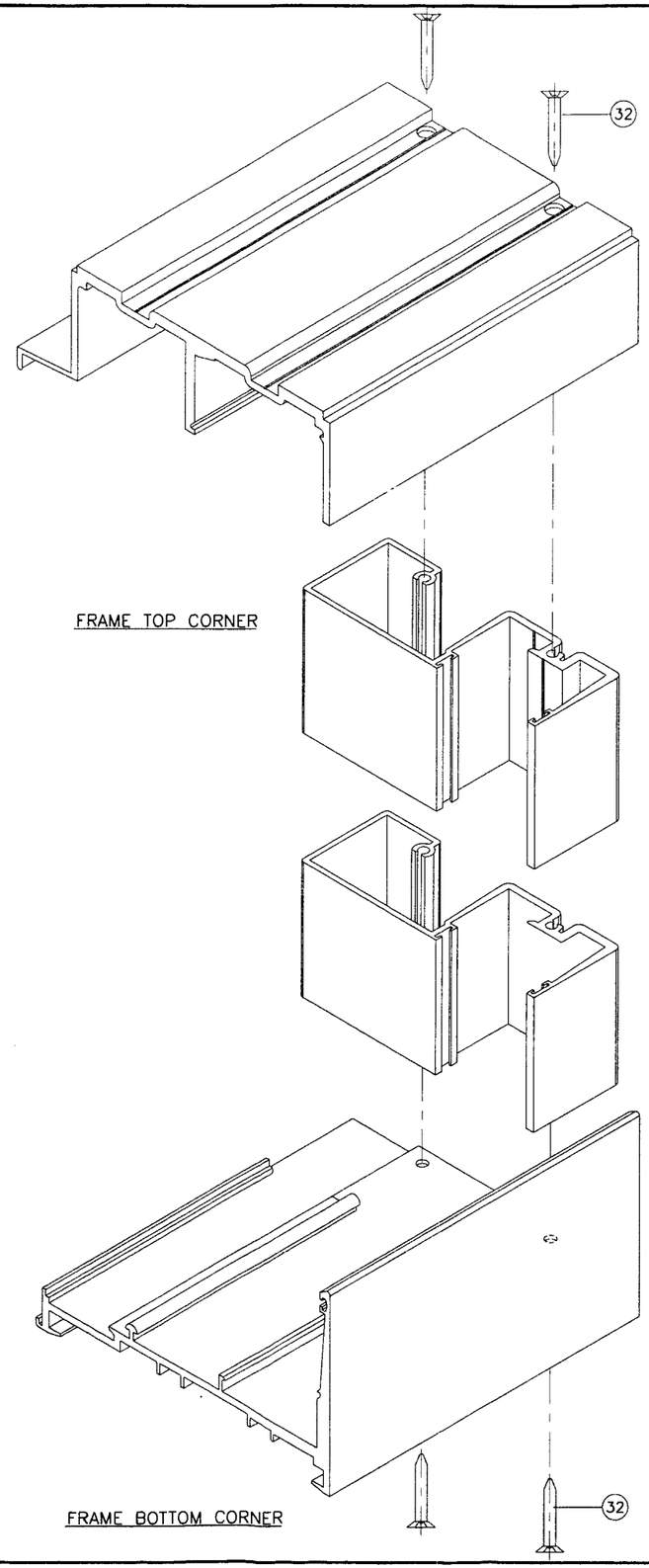

FRAME TOP CORNER

FRAME BOTTOM CORNER

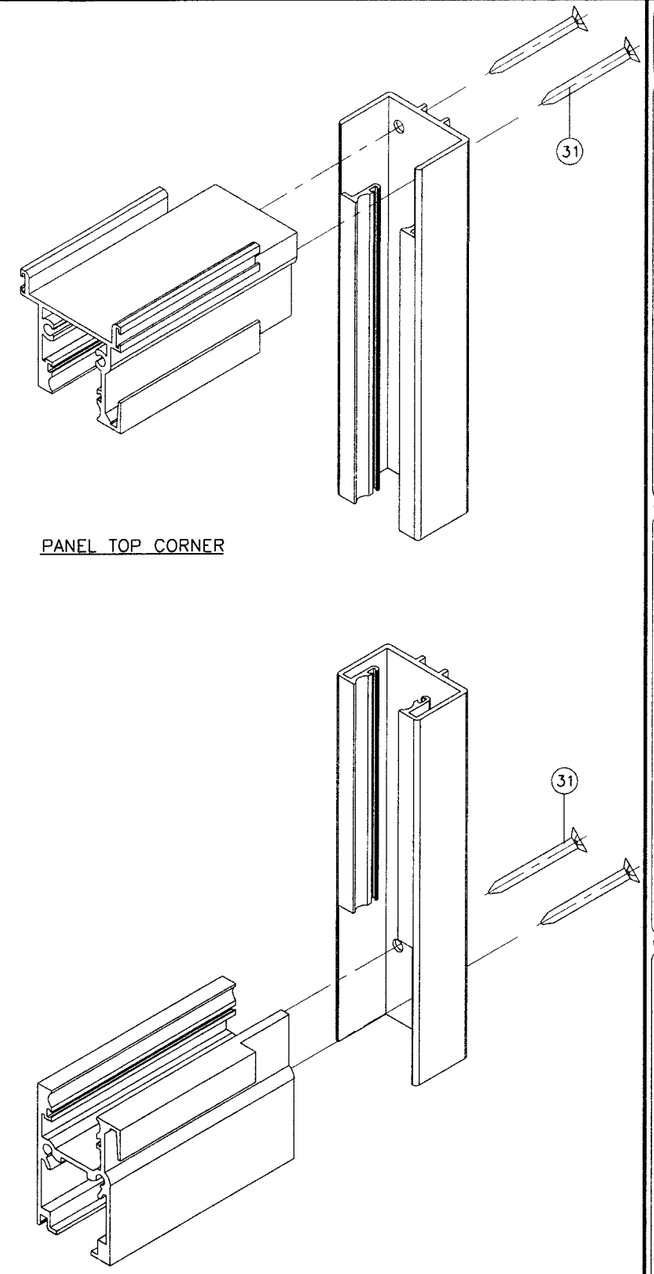

PANEL TOP CORNER

PANEL BOTTOM CORNER

Engr: ARSHAD VIQAR
CIVIL
FLA. PE # 38863
C.A.N. 3538

OCT 05 2009

PRODUCT REVISED
as complying with the Florida
Building Code
Acceptance No 08-1119.07
Expiration Date FEBRUARY 07, 2012
By
Miami Dade Product Control
Division

AL-FAROOQ CORPORATION
ENGINEERS & PRODUCT DEVELOPMENT
1235 S.W. 87 AVE
MIAMI, FLORIDA 33174
TEL. (305) 264-8100 FAX. (305) 262-6978

COMP-ANL\W01-54RC

SERIES-2400ST ALUM SLD. GLASS DOOR (S.M.I.)

R.C. ALUMINUM INDUSTRIES INC.
2805 N.W. 75 TH AVE.
MIAMI, FL. 33122
TEL. (305) 592-1515 FAX. (305) 592-2184

revisions:

no	date	by	description
I	01.24.08		NO CHANGE THIS SHEET
J	11.11.08		UPDATED FOR 2007 FBC
K	12.31.08		REV. PER BCCO COMMENTS
L	08.21.09		NO CHANGE THIS SHEET
M	09.14.09		NO CHANGE THIS SHEET

date: 08-17-01
scale: 1/2" = 1"
dr. by: HAMID
chk. by:

drawing no.
W01-54

sheet 9 of 9