MIAMI-DADE COUNTY
BUILDING CODE COMPLIANCE OFFICE (BCCO)
PRODUCT CONTROL DIVISION

MIAMI-DADE COUNTY, FLORIDA
METRO-DADE FLAGLER BUILDING
140 WEST FLAGLER STREET, SUITE 1603
MIAMI, FLORIDA 33130-1563
(305) 375-2901 FAX (305) 372-6339
www.miamidade.gov/buildingcode

NOTICE OF ACCEPTANCE (NOA)

Hurst Awning Company, Inc.
6865 NW 36 Avenue
Miami, FL 33147

SCOPE:

This NOA is being issued under the applicable rules and regulations governing the use of construction materials. The documentation submitted has been reviewed by Miami-Dade County Product Control Division and accepted by the Board of Rules and Appeals (BORA) to be used in Miami Dade County and other areas where allowed by the Authority Having Jurisdiction (AHJ).

This NOA shall not be valid after the expiration date stated below. The Miami-Dade County Product Control Division (In Miami Dade County) and/or the AHJ (in areas other than Miami Dade County) reserve the right to have this product or material tested for quality assurance purposes. If this product or material fails to perform in the accepted manner, the manufacturer will incur the expense of such testing and the AHJ may immediately revoke, modify, or suspend the use of such product or material within their jurisdiction. BORA reserves the right to revoke this acceptance, if it is determined by Miami-Dade County Product Control Division that this product or material fails to meet the requirements of the applicable building code.

This product is approved as described herein, and has been designed to comply with the Florida Building Code, including the High Velocity Hurricane Zone.

DESCRIPTION: Hi-Roller 50 Aluminum Roll-Up Shutter

APPROVAL DOCUMENT: Drawing No. **09-057**, titled "High Roller 50 Extruded Aluminum Roll-Up Shutter", prepared by EngCo Inc., dated 10/15/08, sheets 1 through 15 of 15, signed and sealed by Pedro De Figueiredo, P.E., bearing the Miami-Dade County Product Control approval stamp with the Notice of Acceptance number and approval date by the Miami-Dade County Product Control Division.

MISSILE IMPACT RATING: Large and Small Missile Impact Resistant

LABELING: Each unit shall bear a permanent label with the manufacturer's name or logo, city, state and following statement: "Miami-Dade County Product Control Approved", unless otherwise noted herein.

RENEWAL of this NOA shall be considered after a renewal application has been filed and there has been no change in the applicable building code negatively affecting the performance of this product.

TERMINATION of this NOA will occur after the expiration date or if there has been a revision or change in the materials, use, and/or manufacture of the product or process. Misuse of this NOA as an endorsement of any product, for sales, advertising or any other purposes shall automatically terminate this NOA. Failure to comply with any section of this NOA shall be cause for termination and removal of NOA.

ADVERTISEMENT: The NOA number preceded by the words Miami-Dade County, Florida, and followed by the expiration date may be displayed in advertising literature. If any portion of the NOA is displayed, then it shall be done in its entirety.

INSPECTION: A copy of this entire NOA shall be provided to the user by the manufacturer or its distributors and shall be available for inspection at the job site at the request of the Building Official.

This NOA consists of this page 1 and evidence page E-1, as well as approval document mentioned above.

The submitted documentation was reviewed by **Carlos M. Utrera, P.E.**

MIAMI-DADE COUNTY APPROVED

4/15/09

NOTICE OF ACCEPTANCE: EVIDENCE SUBMITTED

A. DRAWINGS

1. Drawing No. **09-057**, titled "High Roller 50 Extruded Aluminum Roll-Up Shutter", prepared by EngCo Inc., dated 10/15/08, sheets 1 through 15 of 15, signed and sealed by Pedro De Figueiredo, P.E.

B. TESTS

1. Test reports conducted per FBC -TAS 201, TAS 202 & 203-94.
   Test report on Uniform Static Air Pressure Test per TAS 202, Large Missile Impact Test per TAS 201 & Cyclic Wind Pressure Test per TAS 203 of Series 55 mm Aluminum Roll Up Shutter System, prepared by Fenestration Testing Laboratory, Inc., Test reports No(s) **5200,** dated 04/02/07 and **5228**, dated 04/04/07, signed and sealed by Michael R. Wenzel, P.E.
   "Submitted under Association File No. 08-1952"

C. CALCULATIONS

1. Comparative analysis for slats, storm bars, headers, tracks, mullions and anchors, using rational analysis dated 11/24/08, pages 1 through 35 prepared by EngCo, Inc. signed and sealed by Pedro De Figueiredo, P.E.
   "Submitted under Association File No. 08-1952"

D. QUALITY ASSURANCE

1. Miami Dade Building Code Compliance Office (BCCO).

E. MATERIAL CERTIFICATIONS

1. Tensile Test Report per ASTM B557, prepared by Fenestration Testing Laboratory, Inc., Report No. **5200**, dated 04/02/07, signed and sealed by Michael R. Wenzel, P.E.
   "Submitted under Association File No. 08-1952"

F. STATEMENTS

1. Release letter issued by Hi-Tech Shutters Group, Inc., dated 12/11/08, and signed Rudy Garmendia.
2. Acknowledgment letter issued by Hurst Awning Company, Inc., dated 12/11/08, and signed by Rudy Garmendia.
3. Statement of code compliance issued by EngCo Inc., dated 09/19/09, signed and sealed by Pedro De Figueiredo, P.E.

3. Statement Letter of product compliance to FBC & "No financial interest" dated November 24, 2008, signed and sealed by Pedro De Figueiredo, P.E.
   "Submitted under Association File No. 08-1952"

4/15/09

Carlos M. Utrera, P.E.
Product Control Examiner
NOA No. 08-1211.04
Expiration Date: April 15, 2014
Approval Date: April 15, 2009

GENERAL NOTES:

1- DEFINITION: THIS PRODUCT IS A ROLL-UP TYPE SHUTTER; DESIGNED, CONSTRUCTED AND ERECTED TO EASILY ENCLOSE AN AREA, PROVIDING PROTECTION FROM HURRICANE FORCE WINDS WITHIN THE ALLOWABLE DESIGNED PRESSURES AND LIMITATIONS STATED IN THIS APPROVAL.

2- CODE: THIS PRODUCT HAS BEEN TESTED UNDER THE TAS 201, 202 AND 203 (LARGE & SMALL MISSILE) STANDARDS AND DESIGNED IN ACCORDANCE WITH THE FLORIDA BUILDING CODE, 2007 EDITION, INCLUDING THE HVHZ (HIGH VELOCITY HURRICANE ZONES).

3- POSTING: A LEGIBLE DECAL SHALL BE PLACED AT A READILY VISIBLE LOCATION STATING THE FOLLOWING:

'HURST HURRICANE SHUTTERS.
MIAMI, FLORIDA
MIAMI-DADE COUNTY PRODUCT APPROVED'

4- LOADS: THE DESIGNED LOAD MUST BE CALCULATED BY A PROFESSIONAL ARCHITECT OR ENGINEER FOR EACH SPECIFIC PROJECT. THE CALCULATED DESIGNED PRESSURE MUST NOT EXCEED THE ALLOWABLE PRESSURES FOR EACH SHUTTER COMPONENT TO BE USED.

5- MATERIAL: ALL EXTRUDED ALUMINUM SHAPES SHALL BE MADE OF 6063-T6 OR AS NOTED.

6- FASTENERS: ASSEMBLY SCREWS AND ANCHORS SHALL BE AS SPECIFIED IN THE CURRENT SET OF DRAWINGS. INSTALLATION AND LOADS AS PER THIS APPROVAL. NO 33 1/3% INCREASE IN ALLOWABLE STRESS HAS BEEN USED IN THE DESIGN OF THIS PRODUCT. ANCHORS INTO WOOD WERE DESIGNED WITH 1.6 LOAD DURATION. (Kd=.85)

7- MULTIPLE SPAN SHUTTERS: MULTIPLE SPAN COMPONENTS SUCH AS STORM BARS, MULLIONS AND HEADERS, TO BE DESIGNED AS PER THIS SET OF DRAWINGS.

8- USE: IT SHALL BE THE RESPONSIBILITY OF THE CONTRACTOR, ARCHITECT OR ENGINEER OF RECORD TO VERIFY THE FOLLOWING:
8.1- THE STABILITY OF THE STRUCTURE WHERE THE SHUTTER IS TO BE ATTACHED INSURING PROPER ANCHORAGE.
8.2- THE SITE SPECIFIC PROJECT CRITERIA, SUCH AS BUT NOT LIMITED TO, WIND LOADS, LOCAL CODE REQUIREMENTS, DESIGNED PRESSURES ETC.
8.3- THAT THIS APPROVAL IS ADEQUATE TO THE SPECIFIC PROJECT.

TYPICAL SHUTTER CONFIGURATIONS

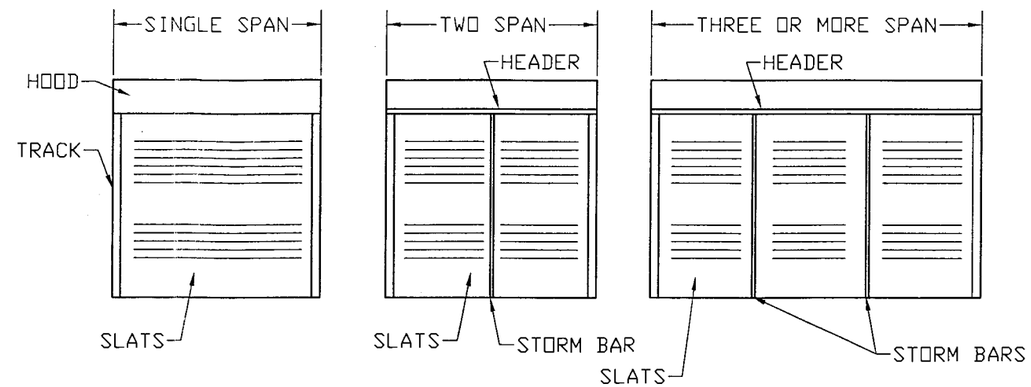

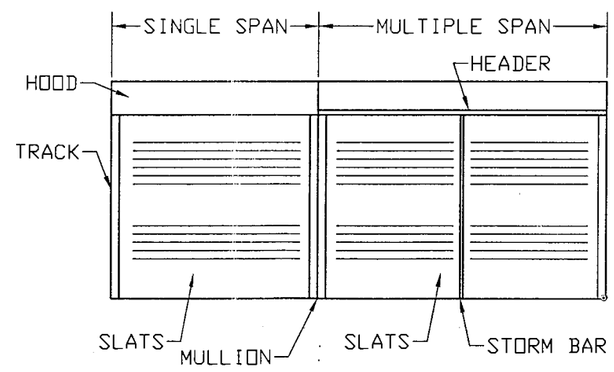

DESIGNED PRESSURE	
COMPONENT	REF. SHEET
SLAT SPAN	3
TRACK ANCHORAGE	4-5
STORM BARS	6-9
HEADERS	10
MULLIONS	11-15

NOTES:
1- ALLOWABLE DESIGNED PRESSURE FOR MULTIPLE SPANS SHUTTERS ARE FUNCTION OF THE LOWEST ALLOWABLE DESIGNED LOAD FOR THE SLATS, STORM BARS, HEADERS, MULLIONS.

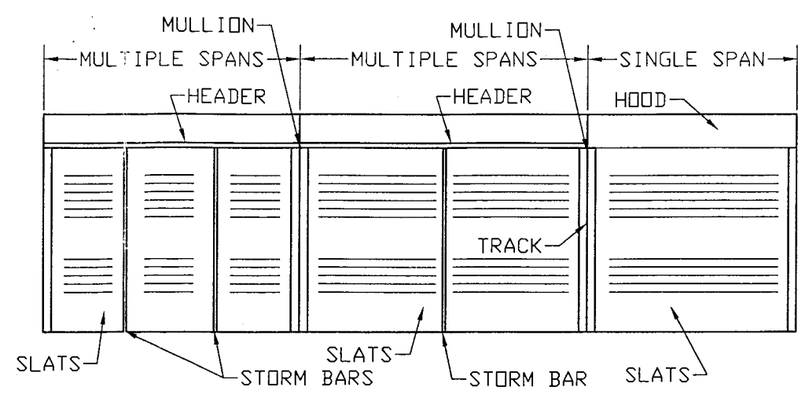

MANUFACTURER:
Hurst Hurricane Shutters
6865 NW 36th AVE.
MIAMI, FLORIDA 33147
TEL.: (305) 635-0900
FAX.: (305) 634-9078

PRODUCT:

HI-ROLLER 50

EXTRUDED ALUMINUM ROLL-UP SHUTTER

Engineering:
EngCo Inc.
CA 8116
6971 W. Sunrise Blvd. 104
Plantation, Fl. 33313
ENGCO@AOL.COM

MAR 19 2009

Engineer Seal
Pedro De Figueiredo, PE 52609

DRAFTING:
PK DRAFTING & MORE

Date: 10/15/08
Scale: NA
Design by: PPMF

MIAMI-DADE BCCO:

Approved as complying with the Florida Building Code
Date 03/15/2009
NOA# 08-1211.04
Miami Dade Product Control Division
By

Drawing Number
09-057

BASIC SHUTTER COMPONENTS

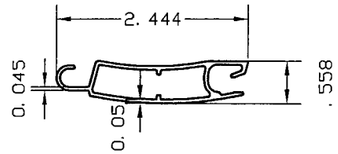

1- SLAT 6063-T6
ALUMINUM ALLOY

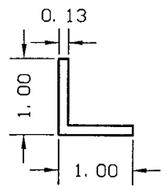

4- 1/8"-1x1 ANGLE
EXTRUDED ALUMINUM
6063-T6 Alloy

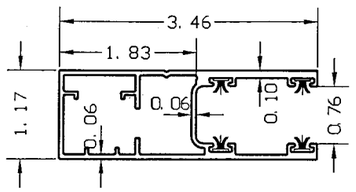

2- SMALL SIDE RAIL
6063-T6 ALUMINUM ALLOY

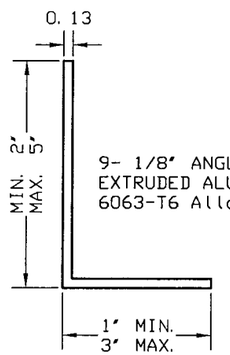

9- 1/8" ANGLE
EXTRUDED ALUMINUM
6063-T6 Alloy

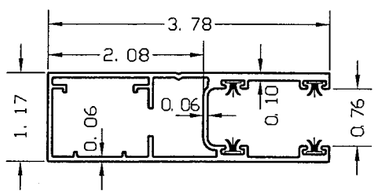

3- LARGE SIDE RAIL
6063-T6 ALUMINUM ALLOY

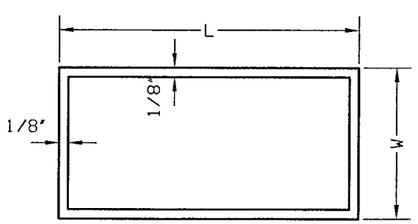

5/6/7/8/9/10- BOX BEAM
ALUMINUM TUBE 6063-T6 Alloy

MEMBER MARK	W (IN)	L (IN)	Tf (IN)	Tw (IN)
5	2	3	1/8	1/8
6	2	4	1/8	1/8
7	2	5	1/8	1/8
8	2	6	1/8	1/8

HOOD ASSEMBLY

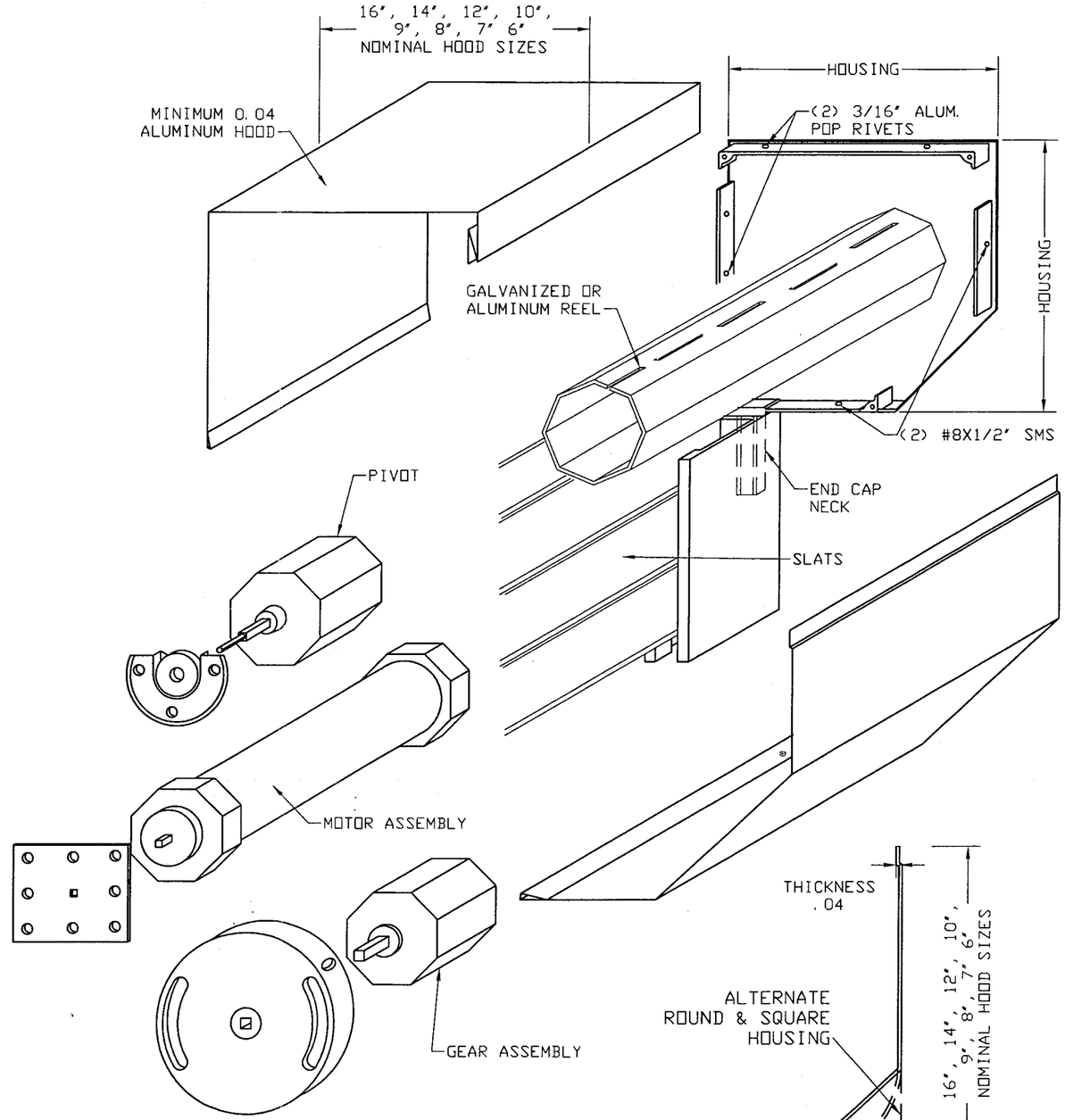

NOTE: THE ROLL-UP MECHANISM (GEARS, MOTORS, SUPPORTING END PLATES) ARE NOT PART OF THIS APPROVAL. MANUFACTURER IS RESPONSIBLE TO SPECIFY THESE COMPONENTS FOR PROPER SHUTTER OPERATION.

MANUFACTURER:
Hurst Hurricane Shutters
6865 NW 36th AVE.
MIAMI, FLORIDA 33147
TEL.: (305) 635-0900
FAX.: (305) 634-9078

PRODUCT:

HI-ROLLER 50

EXTRUDED ALUMINUM
ROLL-UP SHUTTER

Engineering:
EngCo Inc.
CA 8116
6971 W. Sunrise Blvd. 104
Plantation, Fl. 33313
ENGCO@AOL.COM

MAR 9 2009

Engineer Seal
Pedro De Figueiredo, PE 52609

DRAFTING:
PK DRAFTING & MORE

Date: 10/15/08
Scale: NA
Design by: PPMF

MIAMI-DADE BCCO:

Approved as complying with the Florida Building Code
Date 04/15/2009
NOA# 09-1211.04
Miami Dade Product Control Division
By

Drawing Number
09-057

TABLE 1 - SLATS SPAN X DESIGN LOAD

POSITIVE & NEGATIVE LOADS (PSF)
X
MAXIMUM SLAT SPAN (IN)

Pd(+)	# OF SPANS		
PSF	1	2	3+
24.7	90	90	90
28.2	87	87	87
32.0	84	84	84
35.7	82	82	82
39.6	80	80	80
45.7	77	77	77
51.5	75	75	75
52.7	74	74	74
55.6	74	74	74
57.8	73	73	73
59.3	72	72	72
60.0	72	72	72
62.3	71	71	71
64.7	71	71	71
67.3	70	70	70
69.0	70	70	70
70.0	69	69	69
72.8	69	69	69
75.8	68	68	68
80.0	67	67	67
90.0	65	65	65
100	59	59	59
110	54	54	54
120	49	49	49
130	46	46	46
140	42	42	42
150	39	39	39
160	37	37	37
170	35	35	35
180	33	33	33
190	31	31	31
200	29	29	29
210	28	28	28
220	27	27	27

Pd(-)	# OF SPANS		
PSF	1	2	3+
24.7	107	107	107
28.2	102	102	102
32.0	98	98	98
35.7	94	94	94
39.6	91	91	91
45.7	87	87	87
51.5	84	84	84
52.7	83	83	83
55.6	82	82	82
57.8	81	81	81
59.3	80	80	80
60.0	80	80	80
62.3	79	79	79
64.7	78	78	78
67.3	77	77	77
69.0	76	76	76
70.0	76	76	76
72.8	75	75	75
75.8	74	74	74
80.0	72	72	72
90.0	69	69	69
100	64	64	64
110	58	58	58
120	53	53	53
130	49	49	49
140	45	45	45
150	42	42	42
160	40	40	40
170	37	37	37
180	34	34	34
190	33	33	33
200	32	32	32
210	31	31	31
220	31	31	31

Pd= DESIGN LOAD IN PSF
SPAN= SLAT SPAN IN INCHES

TABLE 1A (GS)

MINIMUM SHUTTER SEPARATION FROM GLASS

		UNIT LOCATION	
Pd(+) PSF	SPAN (IN)	<=30' GRADE	>30' GRADE
30	36	2"	1-1/8"
	49	2"	1-1/4"
	60	2-1/2"	1-1/2"
	74	2-1/2"	2-1/8"
	84	2-5/8"	2-5/8"
40	36	2"	1-1/8"
	49	2"	1-1/4"
	60	2-1/2"	1-5/8"
	74	2-1/2"	2-3/8"
	77	2-1/2"	2-1/2"
50	36	2"	1-1/8"
	49	2"	1-3/8"
	60	2-7/8"	1-3/4"
	74	2-7/8"	2-5/8"
	75	2-3/4"	2-3/4"
60	36	2"	1-1/8"
	49	2"	1-3/8"
	60	2"	1-7/8"
	72	2-3/4"	2-3/4"
70	36	2"	1-1/8"
	49	2"	1-3/8"
	60	2-1/8"	2-1/8"
	69	2-3/4"	2-3/4"
80	36	2"	1-1/8"
	49	2"	1-1/2"
	60	2-1/4"	2-1/4"
	67	2-3/4"	2-3/4"
90	36	2"	1-1/8"
	49	2"	1-5/8"
	60	2-3/8"	2-3/8"
	65	2-3/4"	2-3/4"
100	36	2"	1-1/4"
	49	2"	1-5/8"
	59	2-3/8"	2-3/8"

GS: GLASS SEPARATION
SEE TABLE 1A FOR REQUIRED
GLASS SEPARATION

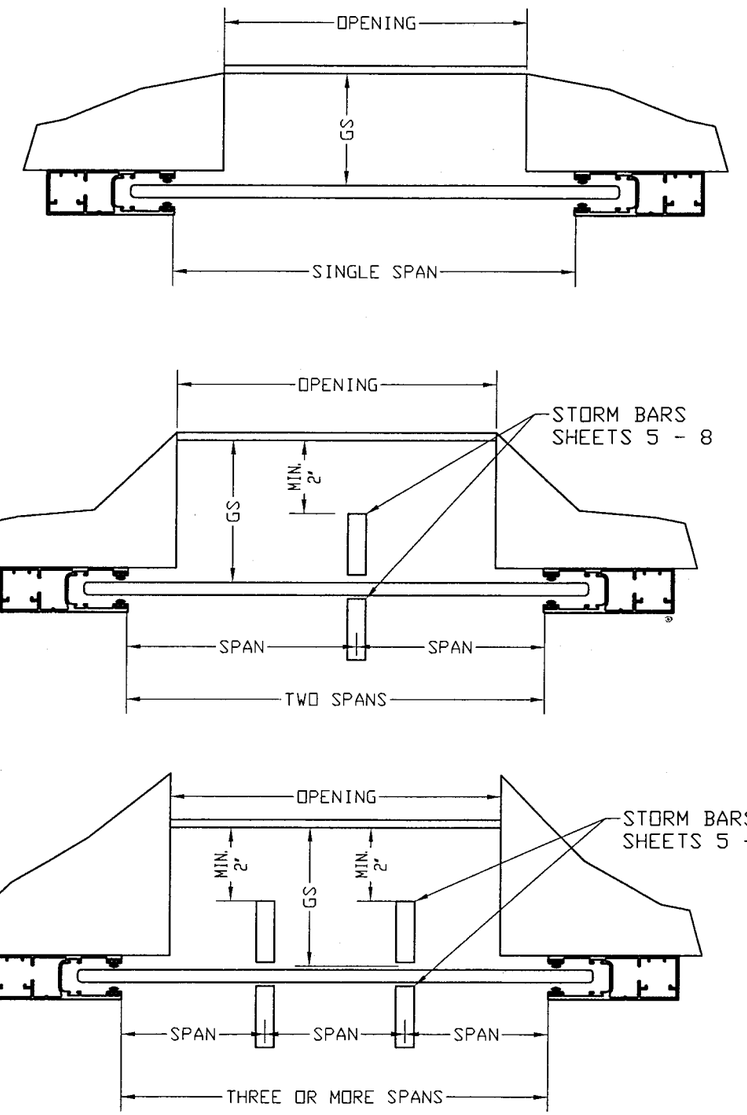

NOTES:
1- INSTALLATION OF THIS PRODUCT IN THE REVERSED POSITION IS ACCEPTABLE
2- INTERPOLATE FOR SLAT SPANS & DEFLECTION BETWEEN THOSE SHOWN ON THIS SHEET

MANUFACTURER:
Hurst Hurricane Shutters
6865 NW 36th AVE.
MIAMI, FLORIDA 33147
TEL.: (305) 635-0900
FAX.: (305) 634-9078

PRODUCT:
HI-ROLLER 50
EXTRUDED ALUMINUM
ROLL-UP SHUTTER

Engineering:
EngCo Inc.
CA 8116
6971 W. Sunrise Blvd. 104
Plantation, Fl. 33313
ENGCO@AOL.COM

MAR 19 2009

Engineer Seal
Pedro De Figueiredo, PE 52609

DRAFTING:
PK DRAFTING & MORE

Date: 10/15/08
Scale: NA
Design by: PPMF

MIAMI-DADE BCCO:

Approved as complying with the Florida Building Code
Date 04/15/2009
NOA# 08-1211.04
Miami Dade Product Control Division
By

Drawing Number
09-057

TRACK ANCHORAGE OPTIONS

WALL MOUNT

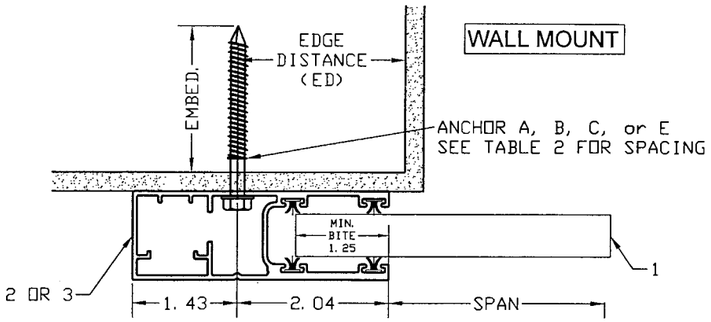

TABLE 2
WALL MOUNT TRACK ANCHORAGE SPACING
BUILT-OUT MOUNT TRACK ANCHORAGE SPACING

	SLAT SPAN (inches)																							
	91				82				78				72				64				31			
Pd	A	B	C	E	A	B	C	E	A	B	C	E	A	B	C	E	A	B	C	E	A	B	C	E
40	12	7	12	12	12	8	12	12	12	8	12	12	12	9	12	12	12	10	12	12	12	12	12	12
56					12	5	12	12	12	6	12	12	12	6	12	12	12	7	12	12	12	12	12	12
65									12	5	12	12	12	5	12	12	12	6	12	12	12	12	12	12
80													12	4	12	12	12	5	12	12	12	10	12	12
100																	11	4	12	12	12	8	12	12
220																					10	--	11	12

Pd= Design load in Psf // SPAN= Slat span in inches
Anchor spacing in inches on center

TUBE BUILT-OUT MOUNT

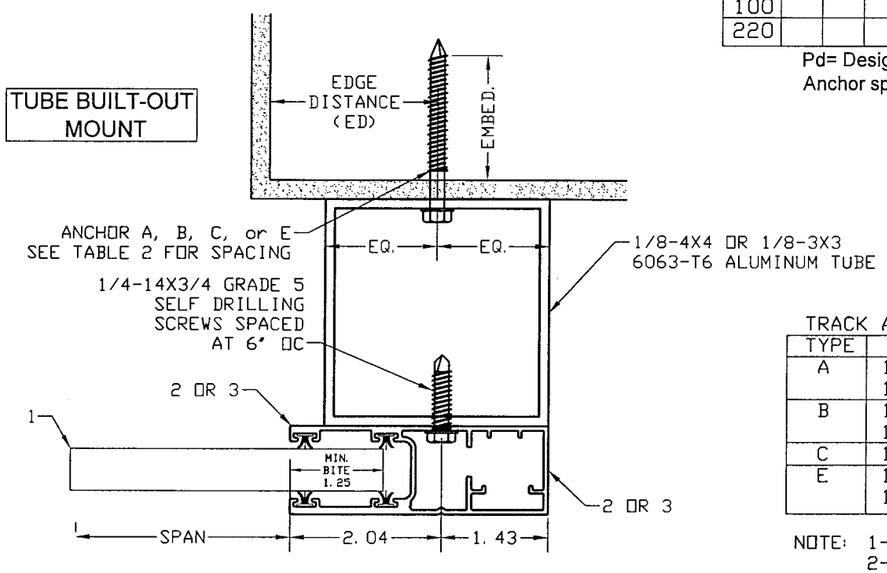

TRACK ANCHOR SCHEDULE

TYPE	DESCRIPTION	MANUFACTURER	EMBEDMENT	ED	BASE MATERIAL
A	1/4" TAPCON	ITW	1-3/4"	2-1/2"	3192 psi CONCRETE
	1/4" ULTRACON	ELCO	1-3/4"	2-1/2"	2700 psi CONCRETE
B	1/4" TAPCON	ITW	1-1/4"	2-1/2"	CONCRETE HOLLOW BLOCK
	1/4" ULTRACON	ELCO	1-1/4"	2-1/2"	CONCRETE HOLLOW BLOCK
C	1/4" ULTRACON	ELCO	2-1/4"	2-1/2"	GF BLOCK
E	1/4" TAPCON	ITW	1 3/4"	1"	WOOD (SG>=.55)
	1/4" ULTRACON	ELCO	1 3/4"	1"	WOOD (SG>=.55)

NOTE: 1- ED - EDGE DISTANCE
2- EMBEDMENT IS BEYOND THE WALL DRESSING

INSET MOUNT

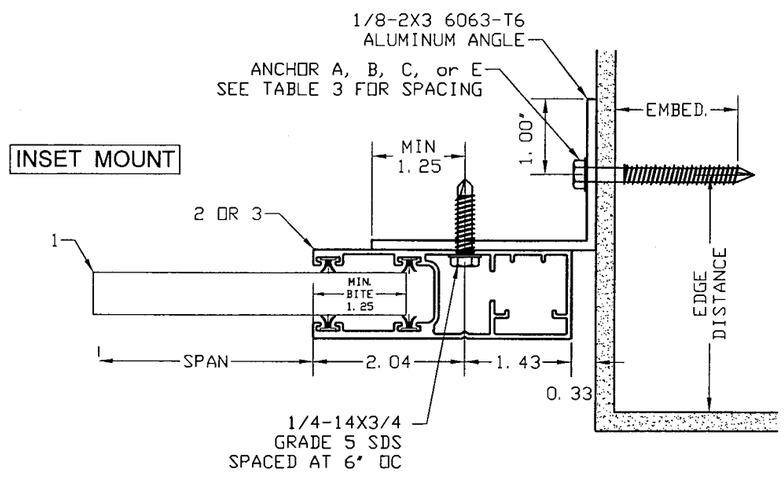

TABLE 3
INSET MOUNT TRACK ANCHORAGE SPACING

	SLAT SPAN (inches)																							
	91				82				78				72				64				31			
Pd	A	B	C	E	A	B	C	E	A	B	C	E	A	B	C	E	A	B	C	E	A	B	C	E
40	8	--	8	8	9	4	9	9	10	4	10	10	11	4	11	11	12	5	12	12	12	11	12	12
56					6	--	6	6	7	--	7	7	7	--	7	7	8	--	8	8	12	7	12	12
65									6	--	6	6	6	--	6	6	7	--	7	7	12	6	12	12
80													5	--	5	5	6	--	6	6	12	5	12	12
100																	5	--	4	5	10	4	10	10
220																					4	--	4	4

Pd= Design load in Psf // SPAN= Slat span in inches
Anchor spacing in inches on center

MANUFACTURER:
Hurst Hurricane Shutters
6865 NW 36th AVE.
MIAMI, FLORIDA 33147
TEL.: (305) 635-0900
FAX.: (305) 634-9078

PRODUCT:
HI-ROLLER 50
EXTRUDED ALUMINUM ROLL-UP SHUTTER

Engineering:
EngCo Inc.
CA 8116
6971 W. Sunrise Blvd. 104
Plantation, Fl. 33313
ENGCO@AOL.COM

MAR 19 2009
Engineer Seal
Pedro De Figueiredo, PE 52609

DRAFTING:
PK DRAFTING & MORE

Date: 10/15/08
Scale: NA
Design by: PPMF

MIAMI-DADE BCCO:

Approved as complying with the Florida Building Code
Date 04/15/2009
NOA# 08-1211.04
Miami Dade Product Control Division
By

Drawing Number
09-057

TRACK ANCHORAGE OPTIONS

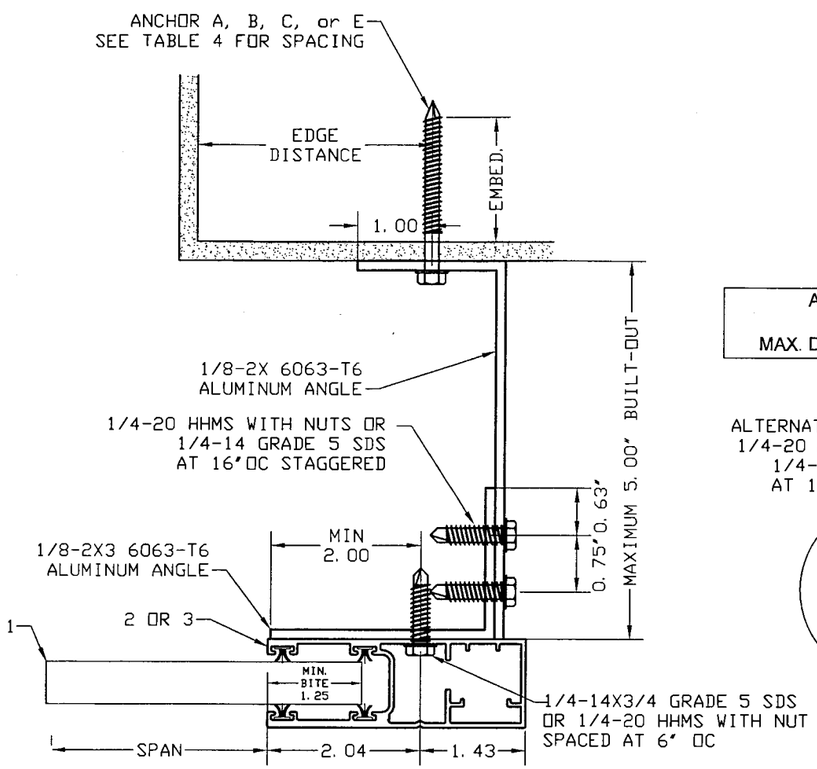

ANGLE BUILT-OUT LIMITED TO:
MAX. SLAT SPAN: 74"
MAX. DESIGNED PRESSURE: +52, -72 PSF

ALTERNATE ASSEMBLY SCREWS
1/4-20 HHMS WITH NUTS OR
1/4-14 GRADE 5 SDS
AT 16"OC STAGGERED

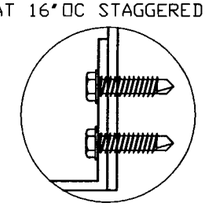

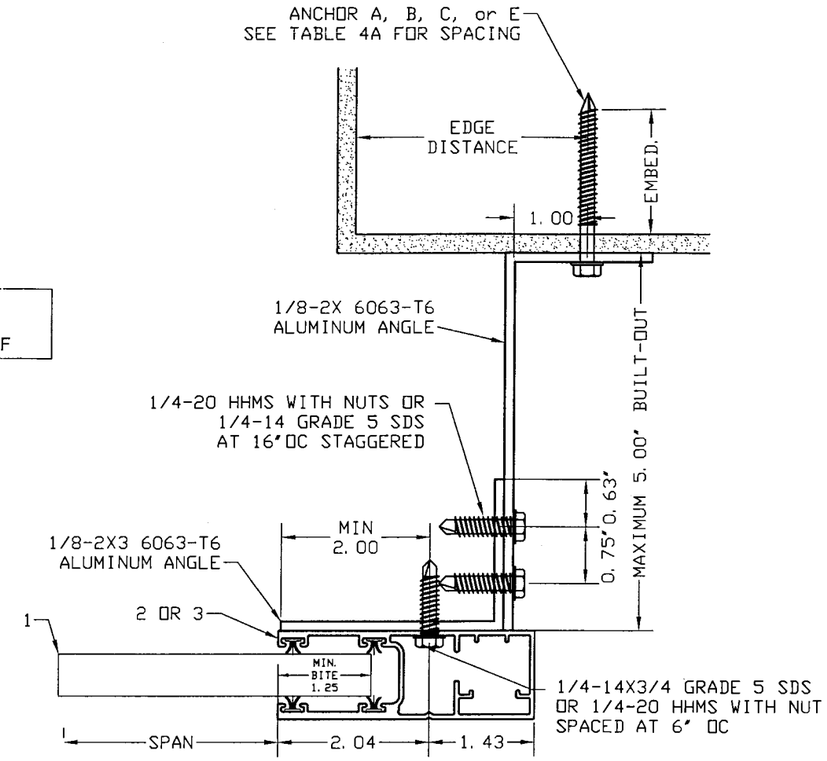

TABLE 4
ANGLE BUILT-OUT MOUNT TRACK ANCHORAGE SPACING

	SLAT SPAN (inches)											
	72				64				31			
Pd	A	B	C	E	A	B	C	E	A	B	C	E
40	12	7	12	12	12	8	12	12	12	12	12	12
56	12	5	12	12	12	5	12	12	12	12	12	12
65	12	4	12	12	12	5	12	12	12	10	12	12
72	10	--	11	12	12	4	12	12	12	9	12	12

Pd= Design load in Psf // SPAN= Slat span in inches
Anchor spacing in inches on center

TABLE 4 A
ALTERNATE ANGLE BUILT-OUT MOUNT TRACK ANCHORAGE SPACING

	SLAT SPAN (inches)											
	72				64				31			
Pd	A	B	C	E	A	B	C	E	A	B	C	E
40	10	--	11	12	12	4	12	12	12	9	12	12
56	7	--	8	9	8	--	9	10	12	6	12	12
65	6	--	7	8	7	--	8	9	12	5	12	12
72	5	--	6	7	6	--	7	8	12	5	12	12

Pd= Design load in Psf // SPAN= Slat span in inches
Anchor spacing in inches on center

TRACK ANCHOR SCHEDULE

TYPE	DESCRIPTION	MANUFACTURER	EMBEDMENT	ED	BASE MATERIAL
A	1/4" TAPCON	ITW	1-3/4"	2-1/2"	3192 psi CONCRETE
	1/4" ULTRACON	ELCO	1-3/4"	2-1/2"	2700 psi CONCRETE
B	1/4" TAPCON	ITW	1-1/4"	2-1/2"	CONCRETE HOLLOW BLOCK
	1/4" ULTRACON	ELCO	1-1/4"	2-1/2"	CONCRETE HOLLOW BLOCK
C	1/4" ULTRACON	ELCO	2-1/4"	2-1/2"	GF BLOCK
E	1/4" TAPCON	ITW	1 3/4"	1"	WOOD (SG>=.55)
	1/4" ULTRACON	ELCO	1 3/4"	1"	WOOD (SG>=.55)

NOTE: 1- ED - EDGE DISTANCE
2- EMBEDMENT IS BEYOND THE WALL DRESSING

MANUFACTURER:
Hurst Hurricane Shutters
6865 NW 36th AVE.
MIAMI, FLORIDA 33147
TEL.: (305) 635-0900
FAX.: (305) 634-9078

PRODUCT:
HI-ROLLER 50
EXTRUDED ALUMINUM ROLL-UP SHUTTER

Engineering:
EngCo Inc.
CA 8116
6971 W. Sunrise Blvd. 104
Plantation, Fl. 33313
ENGCO@AOL.COM

MAR 19 2009

Engineer Seal
Pedro De Figueiredo, PE 52609

DRAFTING:
PK DRAFTING & MORE

Date: 10/15/08
Scale: NA
Design by: PPMF

MIAMI-DADE BCCO:

Approved as complying with the Florida Building Code
Date 04/15/2009
NOA# 08-1211.04
Miami Dade Product Control Division
By

Drawing Number
09-057

STORM BARS SELECTION TABLES
ALLOWABLE DESIGN LOAD - Pd (Psf)

2x2 STORM BAR - 2 SPANS

SLAT	STORM BAR HEIGHT				
Span	36	48	60	72	84
31	189	106	68	47	31
64	91	52	33	--	--
72	80	46	--	--	--
78	65	42	--	--	--
82	56	40	--	--	--
91	40	36	--	--	--

2x2 STORM BAR - 3+ SPANS

SLAT	STORM BAR HEIGHT				
Span	36	48	60	72	84
31	215	121	77	54	35
64	100	59	37	--	--
72	80	52	33	--	--
78	65	48	30	--	--
82	56	46	--	--	--
91	40	40	--	--	--

2x3 STORM BAR - 2 SPANS

SLAT	STORM BAR HEIGHT				
Span	48	60	72	84	96
31	189	121	84	62	46
64	91	59	40	30	--
72	80	52	36	--	--
78	65	48	33	--	--
82	56	46	31	--	--
91	40	40	28	--	--

2x3 STORM BAR - 3+ SPANS

SLAT	STORM BAR HEIGHT				
Span	48	60	72	84	96
31	215	137	95	70	53
64	100	66	45	34	--
72	80	59	41	30	--
78	65	55	37	--	--
82	56	52	35	--	--
91	40	40	32	--	--

2x4 STORM BAR - 2 SPANS

SLAT	STORM BAR HEIGHT				
Span	72	84	96	108	120
31	127	93	70	55	41
64	62	45	34	--	--
72	55	40	30	--	--
78	51	37	--	--	--
82	48	35	--	--	--
91	40	31	--	--	--

2x4 STORM BAR - 3+ SPANS

SLAT	STORM BAR HEIGHT				
Span	72	84	96	108	120
31	145	105	80	63	46
64	70	51	38	30	--
72	62	45	34	--	--
78	57	42	32	--	--
82	55	40	30	--	--
91	40	35	--	--	--

2x5 STORM BAR - 2 SPANS

SLAT	STORM BAR HEIGHT				
Span	72	84	96	108	120
31	178	130	98	76	62
64	86	63	47	37	30
72	77	55	42	33	--
78	65	52	38	30	--
82	56	49	37	--	--
91	40	40	33	--	--

2x5 STORM BAR - 3+ SPANS

SLAT	STORM BAR HEIGHT				
Span	72	84	96	108	120
31	203	147	112	86	70
64	98	71	54	42	34
72	80	63	48	37	30
78	65	59	44	34	--
82	56	56	42	33	--
91	40	40	37	--	--

STORM BARS MOUNTING OPTIONS

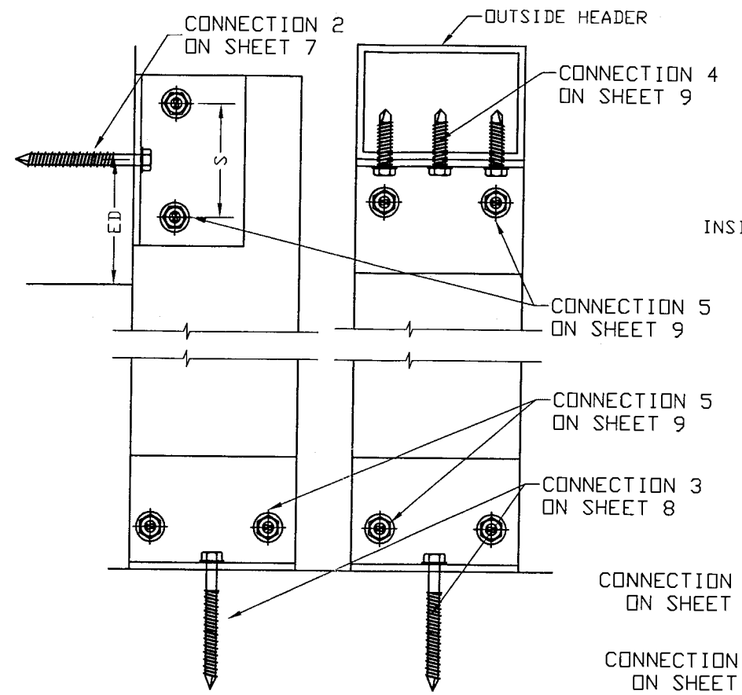

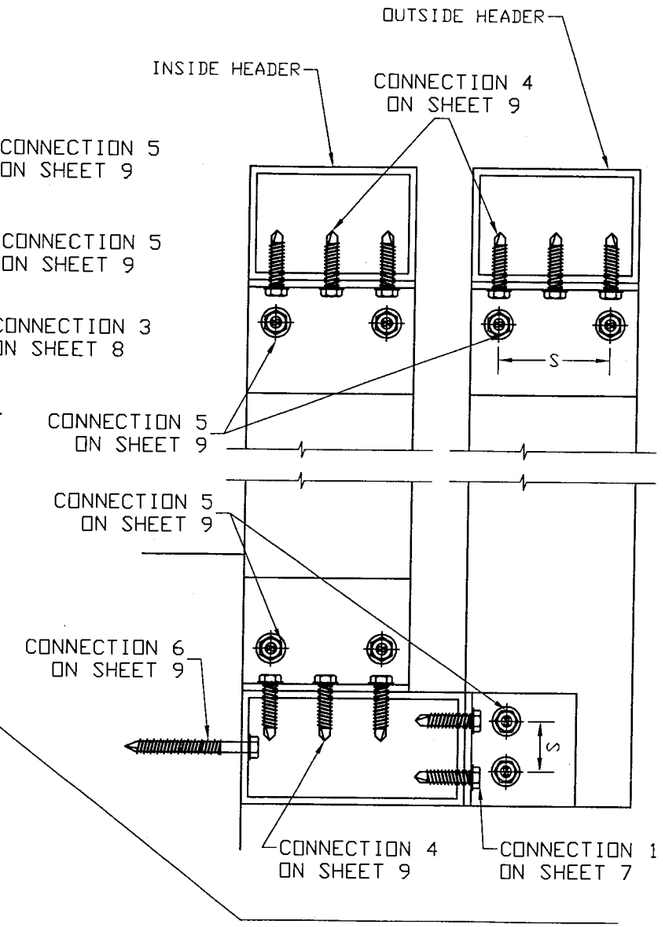

STORM BAR NOTES:
1- ALL STORM BAR SHAPES TO BE 6063-T6 ALUMINUM.
2- TABLES MUST WORK IN CONJUNCTION WITH MAXIMUM ALLOWABLE SLAT SPAN TABLES ON SHEET 3.
3- THESE TABLES ARE LIMITED BY THE SHAPES AND ANCHORAGE USED.

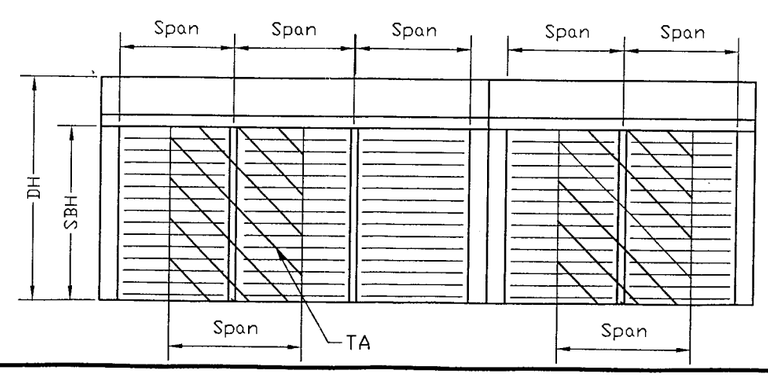

DH - DOOR HEIGHT
SBH - STORM BAR HEIGHT
TA - STORM BAR TRIBUTARY AREA

MANUFACTURER:
Hurst Hurricane Shutters
6865 NW 36th AVE.
MIAMI, FLORIDA 33147
TEL.: (305) 635-0900
FAX.: (305) 634-9078

PRODUCT:
HI-ROLLER 50
EXTRUDED ALUMINUM ROLL-UP SHUTTER

Engineering:
EngCo Inc.
CA 8116
6971 W. Sunrise Blvd. 104
Plantation, Fl. 33313
ENGCO@AOL.COM

MAR 19 2009

Engineer Seal
Pedro De Figueiredo, PE 52609

DRAFTING:
PK DRAFTING & MORE

Date: 10/15/08
Scale: NA
Design by: PPMF

MIAMI-DADE BCCO:

Approved as complying with the Florida Building Code
Date 04/15/2009
NOA# 08-1211.04
Miami Dade Product Control Division
By

Drawing Number
09-057

CONNECTION 1
EXTERNAL STORM BARS ANCHORAGE
WALL MOUNTED TO ALUMINUM TUBE

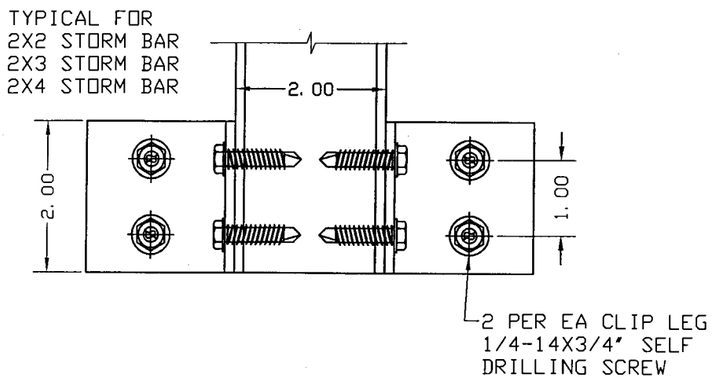

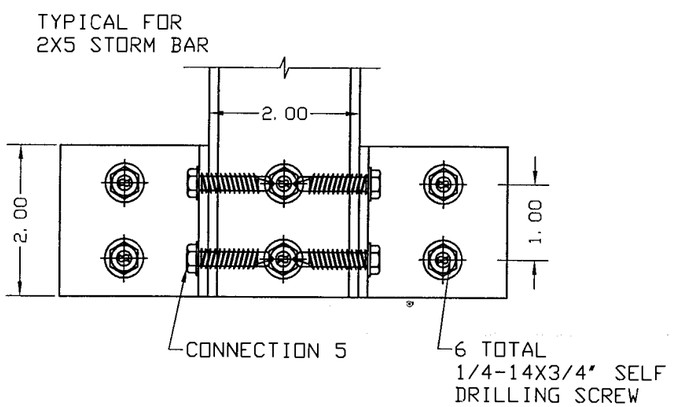

CONNECTION 2
INTERNAL STORM BARS
ANCHORAGE TO WALL

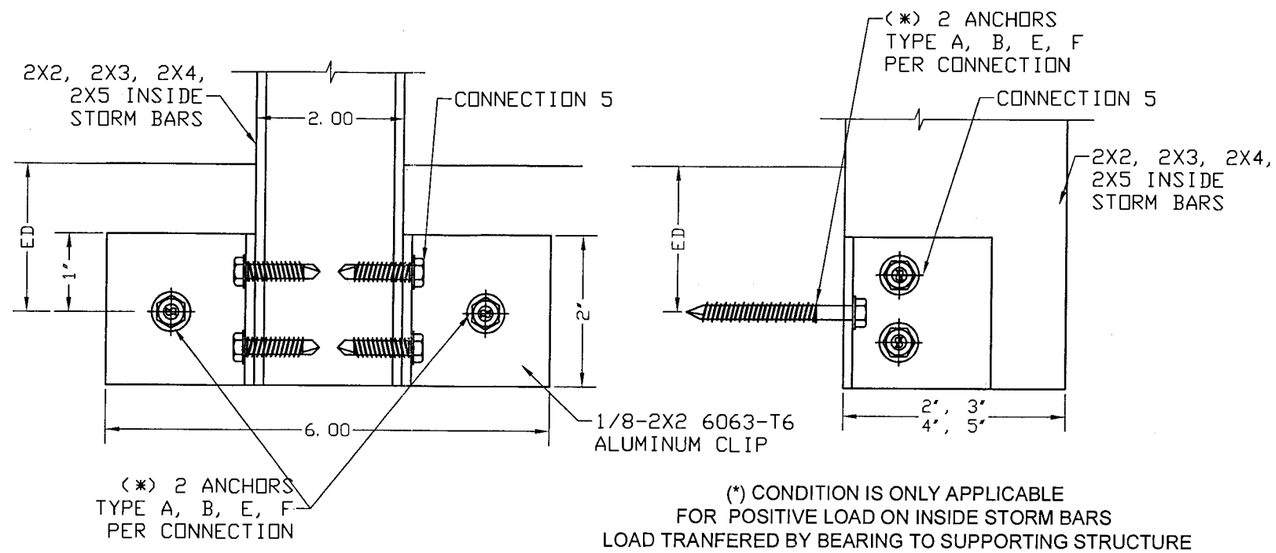

(*) CONDITION IS ONLY APPLICABLE
FOR POSITIVE LOAD ON INSIDE STORM BARS
LOAD TRANFERED BY BEARING TO SUPPORTING STRUCTURE

STORM BARS ANCHOR SCHEDULE

TYPE	DESCRIPTION	MANUFACTURER	EMBEDMENT	ED	BASE MATERIAL
A	1/4" TAPCON	ITW	1-3/4"	2-1/2"	3192 psi CONCRETE
B	1/4" TAPCON	ITW	1-1/4"	2-1/2"	CONCRETE HOLLOW BLOCK
D	1/4-20 CALKIN	POWERS	7/8"	3"	3000 psi CONCRETE
E	1/4" TAPCON	ITW	1-3/4"	1"	WOOD (SG>=.55)
	1/4" ULTRACON	ELCO	1-3/4"	1"	WOOD (SG>=.55)
G	3/8" WEDGE BOLTS	POWERS	2-1/2"	4"	3000 psi CONCRETE

NOTE: 1- ED - EDGE DISTANCE
2- EMBEDMENT IS BEYOND THE WALL DRESSING

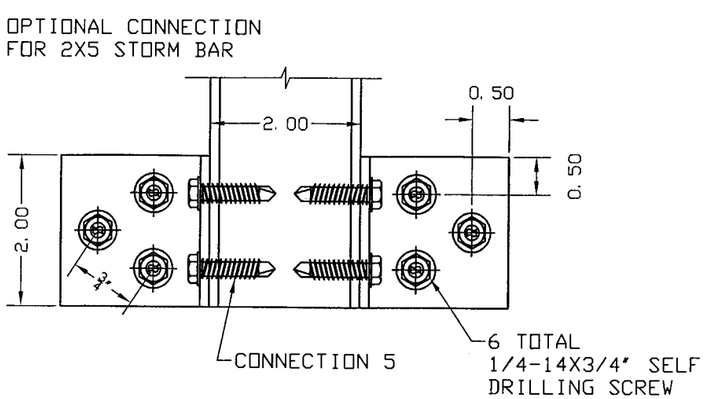

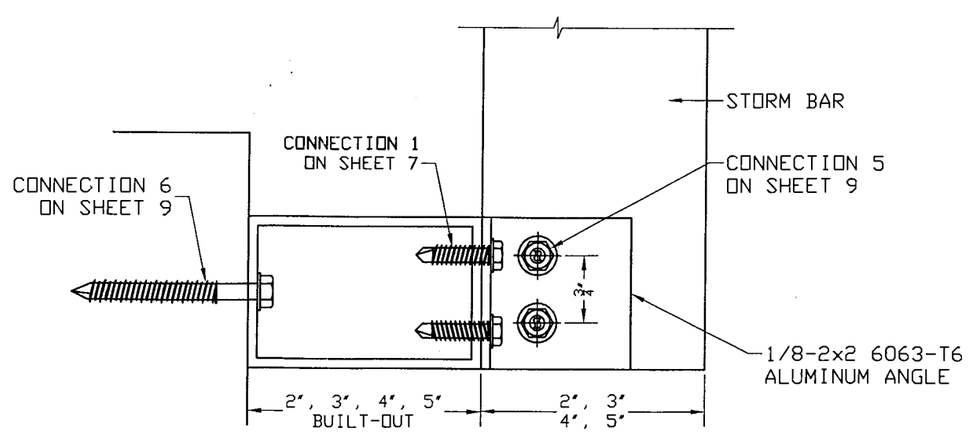

MANUFACTURER:
Hurst Hurricane Shutters
6865 NW 36th AVE.
MIAMI, FLORIDA 33147
TEL.: (305) 635-0900
FAX.: (305) 634-9078

PRODUCT:
HI-ROLLER 50
EXTRUDED ALUMINUM
ROLL-UP SHUTTER

Engineering:
EngCo Inc.
CA 8116
6971 W. Sunrise Blvd. 104
Plantation, Fl. 33313
ENGCO@AOL.COM

MAR 19 2009
Engineer Seal
Pedro De Figueiredo, PE 52609

DRAFTING:
PK DRAFTING & MORE

Date: 10/15/08
Scale: NA
Design by: PPMF

MIAMI-DADE BCCO:

Approved as complying with the
Florida Building Code
Date 04/15/2009
NOA# 02-1211.04
Miami Dade Product Control
Division
By

Drawing Number
09-057

CONNECTION 3
STORM BARS ANCHORAGE
FLOOR/CEILING MOUNTED TO CONCRETE

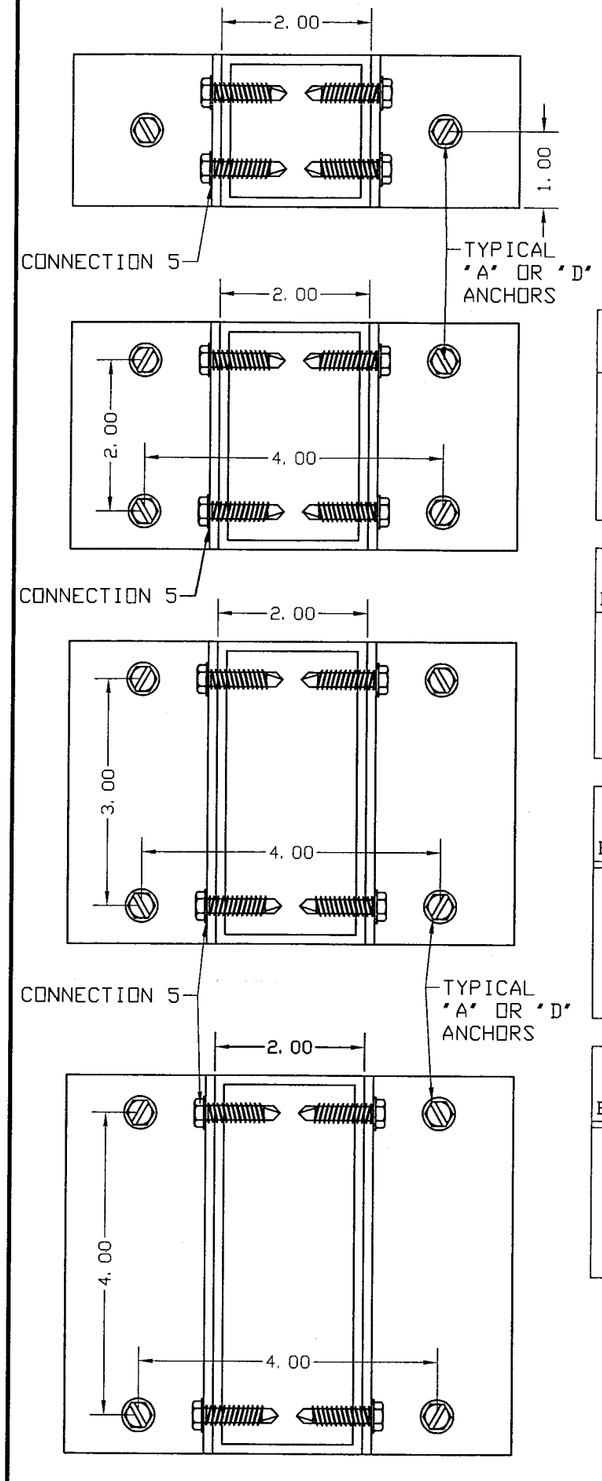

BAR	SLAT Span	MAXIMUM ALLOWABLE DESIGN PRESSURE (PSF) — TYPE "A" ANCHORS — STORM BAR HEIGHT 36	48	60	72	84	SLAT Span	TYPE "D" ANCHORS — STORM BAR HEIGHT 36	48	60	72	84
2 X 2	31	105	79	63	52	45	31	96	72	57	48	41
	64	51	38	30	--	--	64	46	34	--	--	--
	72	45	34	--	--	--	72	41	31	--	--	--
	78	42	31	--	--	--	78	38	--	--	--	--
	82	39	--	--	--	--	82	36	--	--	--	--
	91	36	--	--	--	--	91	32	--	--	--	--

BAR	SLAT Span	STORM BAR HEIGHT 48	60	72	84	96	SLAT Span	STORM BAR HEIGHT 48	60	72	84	96
2 X 3	31	106	84	70	60	53	31	115	92	76	65	57
	64	51	41	34	--	--	64	55	44	37	31	--
	72	45	36	30	--	--	72	49	39	33	--	--
	78	42	33	--	--	--	78	45	36	30	--	--
	82	40	32	--	--	--	82	43	34	--	--	--
	91	36	--	--	--	--	91	39	31	--	--	--

BAR	SLAT Span	STORM BAR HEIGHT 72	84	96	108	120	SLAT Span	STORM BAR HEIGHT 72	84	96	108	120
2 X 4	31	118	101	89	79	71	31	108	92	81	72	64
	64	57	49	43	38	34	64	52	44	39	34	31
	72	51	43	38	34	30	72	46	39	34	31	--
	78	47	40	35	31	--	78	42	36	32	--	--
	82	44	38	33	--	--	82	40	35	30	--	--
	91	40	34	30	--	--	91	36	31	--	--	--

BAR	SLAT Span	STORM BAR HEIGHT 72	84	96	108	120	SLAT Span	STORM BAR HEIGHT 72	84	96	108	120
2 X 5	31	126	108	95	84	76	31	115	98	86	76	69
	64	61	52	46	40	36	64	55	47	41	37	33
	72	54	46	40	36	32	72	49	42	37	33	--
	78	50	43	37	33	30	78	45	39	34	30	--
	82	47	41	35	31	--	82	43	37	32	--	--
	91	40	37	32	--	--	91	39	33	--	--	--

TYPE "G" ANCHORS APPLICABLE FOR ALL CASES

DESIGNED NOT TO EXCEED MAXIMUM
STORM BAR DESIGNED LOAD ON SHEET 6

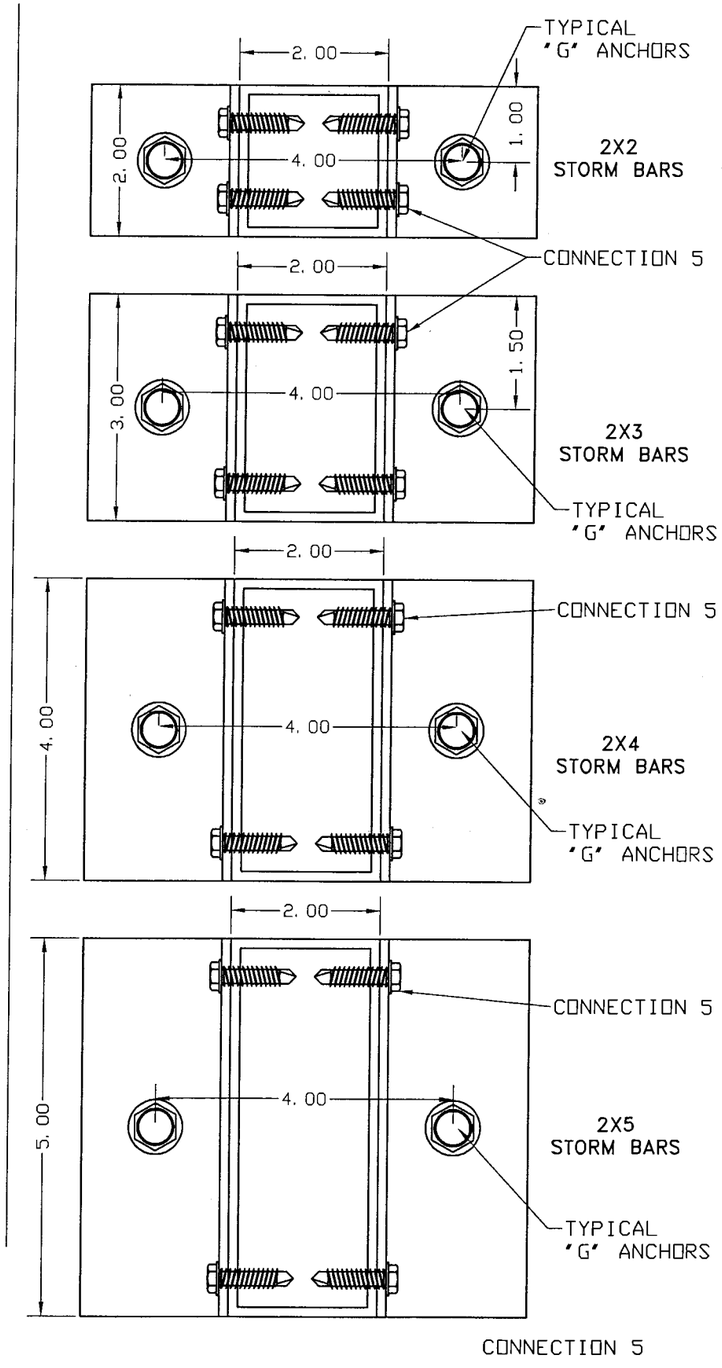

CONNECTION 5

MANUFACTURER:
Hurst Hurricane Shutters
6865 NW 36th AVE.
MIAMI, FLORIDA 33147
TEL.: (305) 635-0900
FAX.: (305) 634-9078

PRODUCT:
HI-ROLLER 50
EXTRUDED ALUMINUM ROLL-UP SHUTTER

Engineering:
EngCo Inc.
CA 8116
6971 W. Sunrise Blvd. 104
Plantation, Fl. 33313
ENGCO@AOL.COM

MAR 19 2009
Engineer Seal
Pedro De Figueiredo, PE 52609

DRAFTING:
PK DRAFTING & MORE

Date: 10/15/08
Scale: NA
Design by: PPMF

MIAMI-DADE BCCO:

Approved as complying with the Florida Building Code
Date 04/15/2009
NOA# 08-1211.04
Miami Dade Product Control Division
By

Drawing Number
09-057

CONNECTION 4
STORM BARS ANCHORAGE FLOOR/CEILING TO BUILT-OUT TUBE OR HEADER

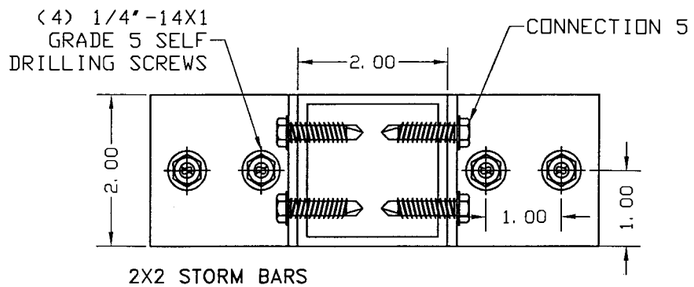

2X2 STORM BARS
ACCEPTABLE FOR ALL CASES
MUST NOT EXCEED STORM BAR DESIGNED LOAD

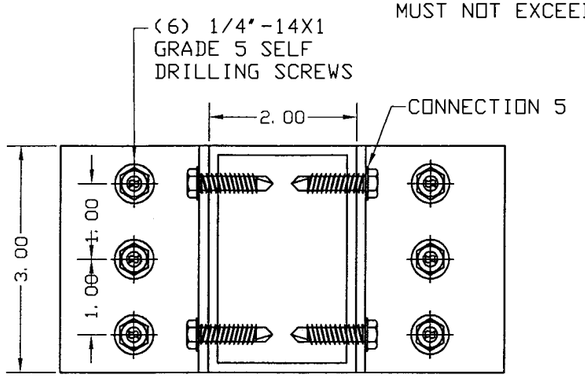

2X3 STORM BARS
ACCEPTABLE FOR ALL CASES
MUST NOT EXCEED STORM BAR DESIGNED LOAD

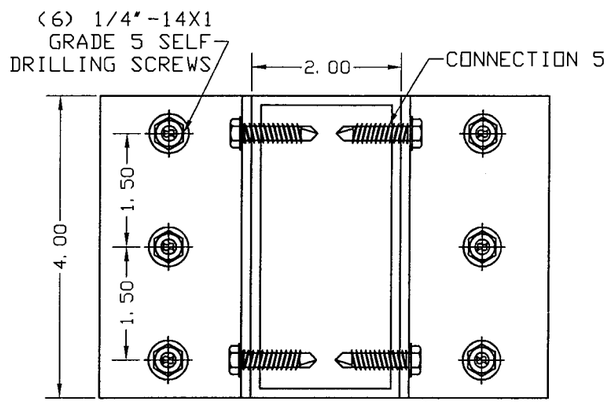

2X4 STORM BARS
ACCEPTABLE FOR ALL CASES
MUST NOT EXCEED STORM BAR DESIGNED LOAD

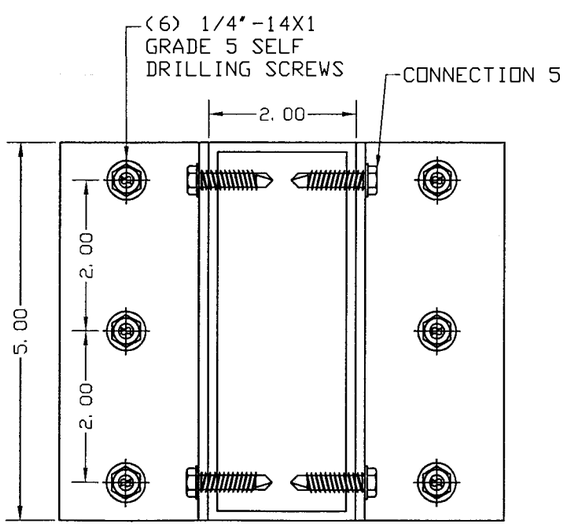

2X5 STORM BARS
ACCEPTABLE FOR ALL CASES
MUST NOT EXCEED STORM BAR DESIGNED LOAD

CONNECTION 5
CLIP ANCHORED TO STORM BAR

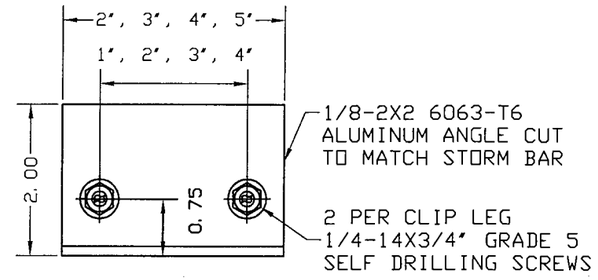

CONNECTION 6
BUILT-OUT WALL ANCHORAGE

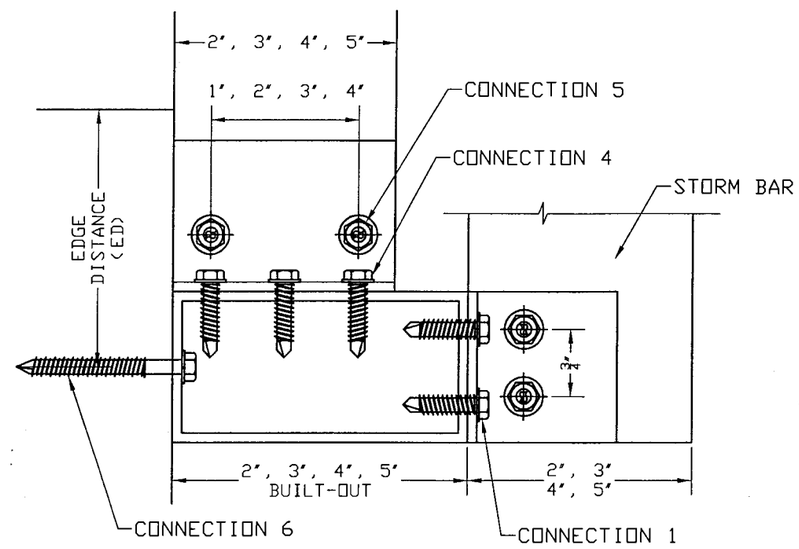

CONNECTION 6
MINIMUM NUMBER OF ANCHORS TO SECURE BUILT-OUT TO WALL

STORM BARS	ANCHOR TYPE			
	A	B	E	G
2x2	2	5	2	1
2x3	3	7	3	2
2x4	3	7	3	2
2x5	3	9	3	2

	ANCHOR TYPE			
	A	B	E	G
S	3.0	3.0	3.0	3.0
ED	2.5	2.5	1.0	3.0

S - ANCHOR SPACING
ED - EDGE DISTNCE

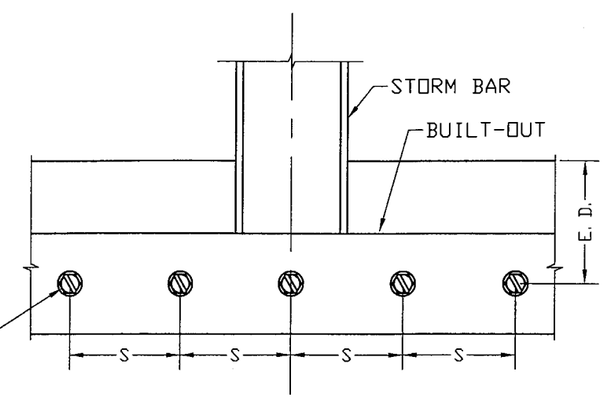

QUANTITY OF ANCHORS FROM TABLE ARE TO BE EQUALLY DIVIDED FROM CENTER LINE OF STORM BAR

MANUFACTURER:
Hurst Hurricane Shutters
6865 NW 36th AVE.
MIAMI, FLORIDA 33147
TEL.: (305) 635-0900
FAX.: (305) 634-9078

PRODUCT:

HI-ROLLER 50
EXTRUDED ALUMINUM ROLL-UP SHUTTER

Engineering:
EngCo Inc.
CA 8116
6971 W. Sunrise Blvd. 104
Plantation, Fl. 33313
ENGCO@AOL.COM

MAR 19 2009

Engineer Seal
Pedro De Figueiredo, PE 52609

DRAFTING:
PK DRAFTING & MORE

Date: 10/15/08
Scale: NA
Design by: PPMF

MIAMI-DADE BCCO:

Approved as complying with the Florida Building Code
Date 04/15/2009
NOA# 08-1211.04
Miami Dade Product Control Division
By

Drawing Number
09-057

HEADER SELECTION TABLES
ALLOWABLE DESIGN LOAD - Pd (Psf)

MAXIMUM DESIGN PRESSURE
FOR 2X3 HEADER - 2 SPANS

SLAT	STORM BAR HEIGHT					
TT	36	48	60	72	84	96
60	209	156	125	104	89	78
72	145	108	87	72	62	54
84	106	80	64	53	45	40
96	81	61	49	40	35	30
108	64	48	38	32	--	--
120	52	39	31	--	--	--

MAXIMUM DESIGN PRESSURE
FOR 2X3 HEADER - 3+ SPANS

SLAT	STORM BAR HEIGHT					
TT	36	48	60	72	84	96
84	136	102	81	68	58	51
96	104	78	62	52	44	39
108	82	61	49	41	35	30
120	66	50	40	33	--	--
144	41	31	--	--	--	--
156	30	--	--	--	--	--

MAXIMUM DESIGN PRESSURE
FOR 2X4 HEADER - 2 SPANS

SLAT	STORM BAR HEIGHT					
TT	48	60	72	84	96	108
60	210	190	158	136	119	105
72	165	132	110	94	82	73
84	121	97	81	69	60	54
96	93	74	62	53	46	41
108	73	58	49	42	36	32
120	59	47	39	34	--	--

MAXIMUM DESIGN PRESSURE
FOR 2X4 HEADER - 3+ SPANS

SLAT	STORM BAR HEIGHT					
TT	48	60	72	84	96	108
84	155	124	103	88	77	69
96	119	95	79	68	59	52
108	94	75	62	53	47	41
120	76	60	50	43	38	33
144	52	42	35	30	--	--
156	45	36	30	--	--	--

MAXIMUM DESIGN PRESSURE
FOR 2X5 HEADER - 2 SPANS

SLAT	STORM BAR HEIGHT					
TT	60	72	84	96	108	120
72	170	154	132	115	102	92
84	135	113	97	84	75	67
96	104	86	74	65	57	52
108	82	68	58	51	45	41
120	66	55	47	41	36	33
144	46	38	33	--	--	--

MAXIMUM DESIGN PRESSURE
FOR 2X5 HEADER - 3+ SPANS

SLAT	STORM BAR HEIGHT					
TT	60	72	84	96	108	120
96	128	106	91	80	71	64
108	105	87	75	65	58	52
120	85	70	60	53	47	42
144	59	49	42	36	32	--
156	50	41	35	31	--	--
180	36	30	--	--	--	--

MAXIMUM DESIGN PRESSURE
FOR 2X6 HEADER - 2 SPANS

SLAT	STORM BAR HEIGHT					
TT	60	72	84	96	108	120
72	170	166	143	125	111	100
84	150	143	122	107	95	85
96	138	115	98	86	76	69
108	109	90	77	68	60	54
120	88	73	63	55	49	44
144	61	51	43	38	34	30

MAXIMUM DESIGN PRESSURE
FOR 2X6 HEADER - 3+ SPANS

SLAT	STORM BAR HEIGHT					
TT	60	72	84	96	108	120
96	128	106	91	80	71	64
108	113	94	81	71	63	56
120	102	85	73	64	56	51
144	78	65	56	49	43	39
156	66	55	47	41	37	33
180	50	41	35	31	--	--

CONNECTION 7
MINIMUM NUMBER OF ANCHORS
TO SECURE BUILT-OUT TO WALL
AT HEADER CONNECTION

	ANCHOR TYPE				
	A	B	C	E	G
n	2	5	2	2	1
S	3.0	3.0	4.0	3.0	---
ED	2.5	2.5	2.5	1.0	3.0

n - MINIMUM NUMBER OF ANCHORS
S - ANCHOR SPACING
ED - EDGE DISTNCE

HEADER MOUNT

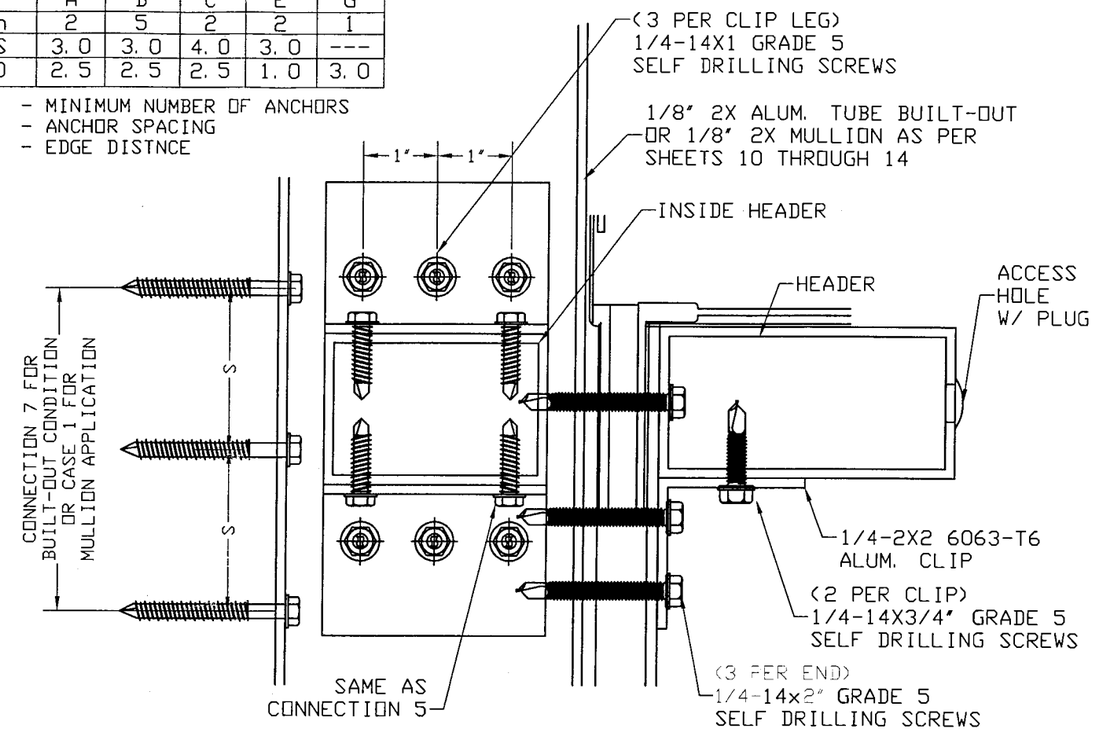

HEADER ANCHOR SCHEDULE

TYPE	DESCRIPTION	MANUFACTURER	EMBEDMENT	ED	BASE MATERIAL
A	1/4" TAPCON	ITW	1 3/4"	2 1/2"	3192 psi CONCRETE
B	1/4" TAPCON	ITW	1 1/4"	2 1/2"	HOLLOW BLOCK
C	1/4" ULTRACON	ELCO	2-1/4"	2-1/2"	GF BLOCK
E	1/4" TAPCON	ITW	1 3/4"	1"	PT WOOD (SG>=.55)
G	3/8" WEDGE BOLTS	POWERS	2 1/2"	3"	3000 psi CONCRETE

ED - EDGE DISTANCE

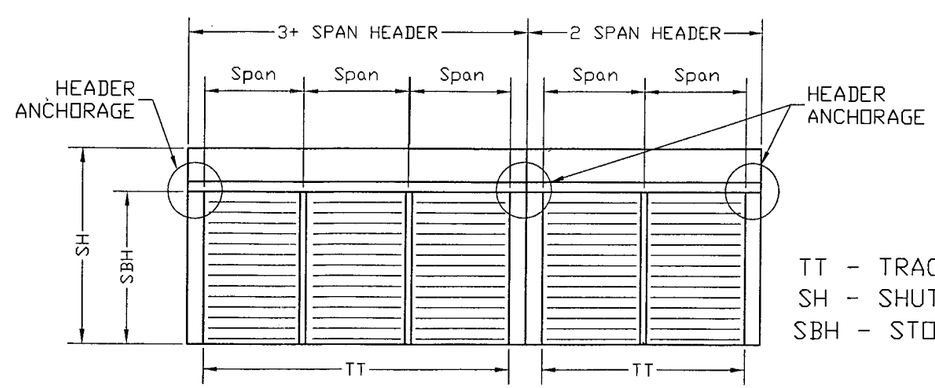

TT - TRACK TO TRACK
SH - SHUTTER HEIGHT
SBH - STORM BAR HEIGHT

MANUFACTURER:
Hurst Hurricane Shutters
6865 NW 36th AVE.
MIAMI, FLORIDA 33147
TEL.: (305) 635-0900
FAX.: (305) 634-9078

PRODUCT:

HI-ROLLER 50
EXTRUDED ALUMINUM
ROLL-UP SHUTTER

Engineering:
EngCo Inc.
CA 8116
6971 W. Sunrise Blvd. 104
Plantation, Fl. 33313
ENGCO@AOL.COM

MAR 19 2009

Engineer Seal
Pedro De Figueiredo, PE 52609

DRAFTING:
PK DRAFTING & MORE

Date: 10/15/08
Scale: NA
Design by: PPMF

MIAMI-DADE BCCO:

Approved as complying with the Florida Building Code
Date 04/15/2009
NOA# 08-1211.04
Miami Dade Product Control Division
By

Drawing Number
09-057

MULLION SELECTION TABLES
ALLOWABLE DESIGN LOAD - Pd (Psf)

CASE 1 :
SINGLE SPAN SHUTTERS AND MULTIPLE SPAN SHUTTERS
WITH HEADER ANCHORED TO WALL

2x2 MULLION

SLAT SPAN	MULLION HEIGHT						
	48	60	64	68	72	76	84
31	197	101	83	69	58	50	37
64	95	49	40	34	--	--	--
72	80	43	36	30	--	--	--
78	65	40	33	--	--	--	--
82	56	38	31	--	--	--	--
91	40	34	--	--	--	--	--

LOADS ARE LIMITED BY THE SLAT SPAN TABLE ON SHEET 3

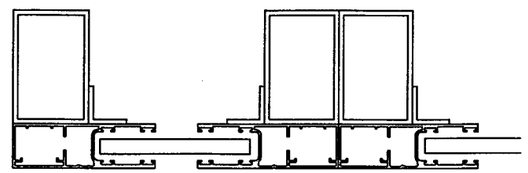

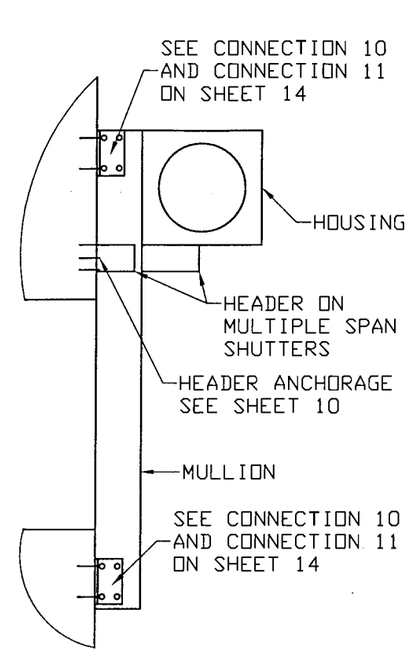

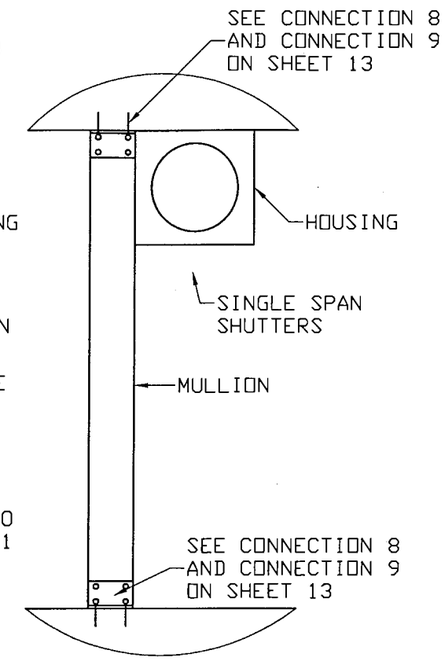

2x3 MULLION

SLAT SPAN	MULLION HEIGHT						
	60	72	78	84	96	108	120
31	220	156	123	98	66	46	34
64	100	76	59	48	32	--	--
72	80	67	53	42	--	--	--
78	65	62	49	39	--	--	--
82	56	56	46	37	--	--	--
91	40	40	40	33	--	--	--

2x4 MULLION

SLAT SPAN	MULLION HEIGHT						
	72	84	96	108	120	132	144
31	220	199	134	94	68	51	40
64	100	97	65	45	33	--	--
72	80	80	57	40	--	--	--
78	65	65	53	37	--	--	--
82	56	56	50	35	--	--	--
91	40	40	40	32	--	--	--

LOADS ARE LIMITED BY THE SLAT SPAN TABLE ON SHEET 3

2x5 MULLION

SLAT SPAN	MULLION HEIGHT						
	84	96	108	120	132	144	156
31	220	220	164	119	90	69	54
64	100	100	79	58	43	33	--
72	80	80	70	51	39	30	--
78	65	65	65	47	36	--	--
82	56	56	56	45	34	--	--
91	40	40	40	40	31	--	--

2x6 MULLION

SLAT SPAN	MULLION HEIGHT						
	108	120	132	144	156	168	180
31	220	190	143	110	86	69	56
64	100	92	69	53	42	34	--
72	80	80	61	47	37	30	--
78	65	65	57	44	34	--	--
82	56	56	54	42	33	--	--
91	40	40	40	37	--	--	--

LOADS ARE LIMITED BY THE SLAT SPAN TABLE ON SHEET 3

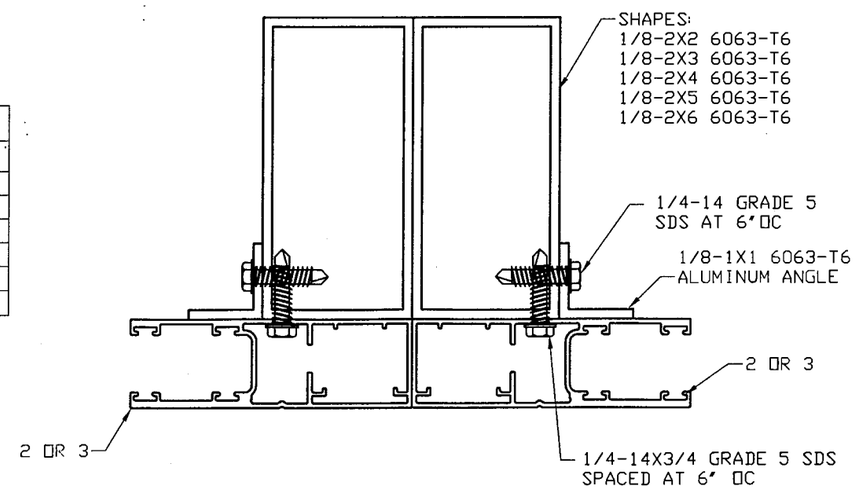

MANUFACTURER:
Hurst Hurricane Shutters
6865 NW 36th AVE.
MIAMI, FLORIDA 33147
TEL.: (305) 635-0900
FAX.: (305) 634-9078

PRODUCT:
HI-ROLLER 50
EXTRUDED ALUMINUM
ROLL-UP SHUTTER

Engineering:
EngCo Inc.
CA 8116
6971 W. Sunrise Blvd. 104
Plantation, Fl. 33313
ENGCO@AOL.COM

MAR 19 2009
Engineer Seal
Pedro De Figueiredo, PE 52609

DRAFTING:
PK DRAFTING & MORE

Date: 10/15/08
Scale: NA
Design by: PPMF

MIAMI-DADE BCCO:
Approved as complying with the Florida Building Code
Date 04/15/2009
NOA# 08-1211.04
Miami Dade Product Control Division
By

Drawing Number
09-057

MULLION SELECTION TABLES
ALLOWABLE DESIGN LOAD - Pd (Psf)

2x2 MULLION

SLAT SPAN	MULLION HEIGHT						
	36	42	48	54	60	66	72
31	144	118	99	77	59	47	37
64	70	57	48	37			
72	62	51	43	33			
78	57	47	39	31			
82	54	45	38				
91	49	40	34				

LOADS ARE LIMITED BY THE SLAT SPAN TABLE ON SHEET 3

CASE 2:
MULTIPLE SPAN SHUTTERS WITH
HEADER ANCHORED TO MULLION

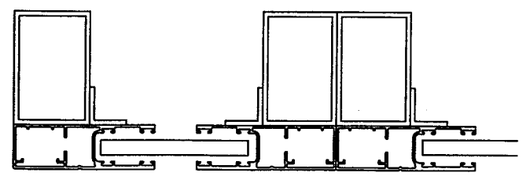

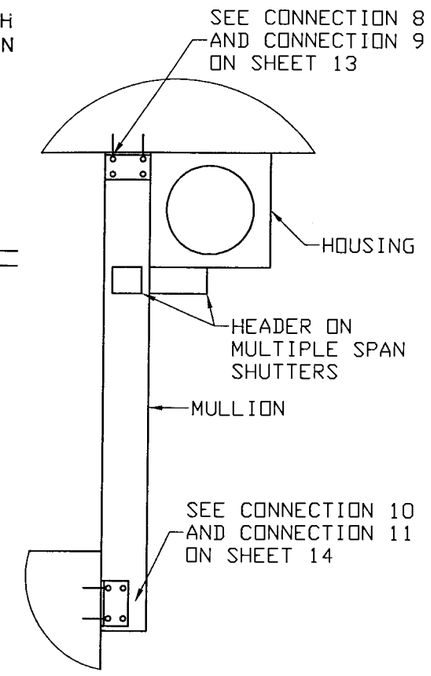

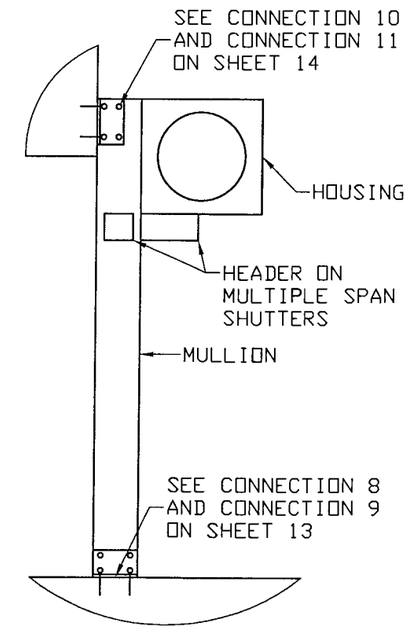

2x3 MULLION

SLAT SPAN	MULLION HEIGHT						
	48	60	72	78	84	96	108
31	165	132	100	81	67	48	35
64	80	64	48	39	33		
72	71	57	43	35			
78	65	53	40	32			
82	56	50	38	31			
91	40	40	34				

2x4 MULLION

SLAT SPAN	MULLION HEIGHT						
	48	60	72	84	96	108	120
31	165	132	110	94	83	69	54
64	80	64	53	46	40	34	
72	71	57	47	41	36	30	
78	65	53	44	38	33		
82	56	50	42	36	31		
91	40	40	38	32			

LOADS ARE LIMITED BY THE SLAT SPAN TABLE ON SHEET 3

2x5 MULLION

SLAT SPAN	MULLION HEIGHT						
	48	60	72	84	96	108	120
31	165	132	110	94	83	73	66
64	80	64	53	46	40	36	32
72	71	57	47	41	36	32	
78	65	53	44	38	33		
82	56	50	42	36	31		
91	40	40	38	32			

2x6 MULLION

SLAT SPAN	MULLION HEIGHT						
	48	60	72	84	96	108	120
31	165	132	110	94	83	73	66
64	80	64	53	46	40	36	32
72	71	57	47	41	36	32	
78	65	53	44	38	33		
82	56	50	42	36	31		
91	40	40	38	32			

LOADS ARE LIMITED BY THE SLAT SPAN TABLE ON SHEET 3

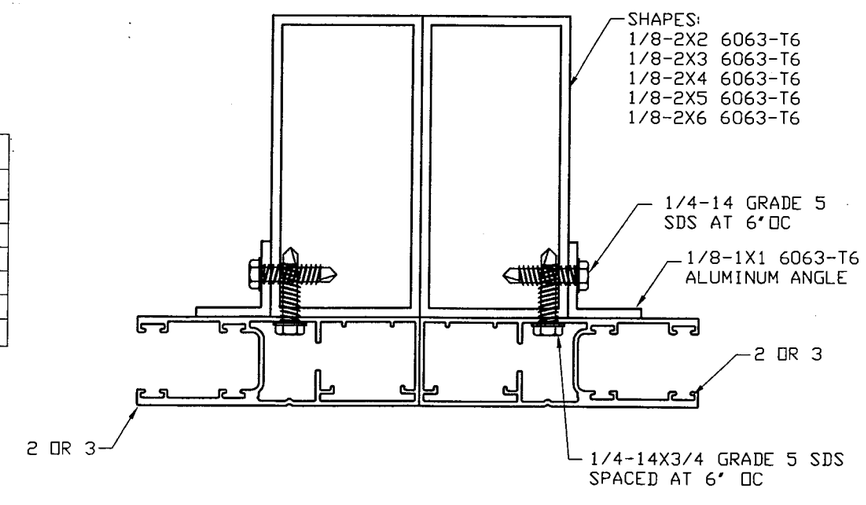

MANUFACTURER:
Hurst Hurricane Shutters
6865 NW 36th AVE.
MIAMI, FLORIDA 33147
TEL.: (305) 635-0900
FAX.: (305) 634-9078

PRODUCT:
HI-ROLLER 50
EXTRUDED ALUMINUM
ROLL-UP SHUTTER

Engineering:
EngCo Inc.
CA 8116
6971 W. Sunrise Blvd. 104
Plantation, Fl. 33313
ENGCO@AOL.COM

MAR 9 2009
Engineer Seal
Pedro De Figueiredo, PE 52609

DRAFTING:
PK DRAFTING & MORE

Date: 10/15/08
Scale: NA
Design by: PPMF

MIAMI-DADE BCCO:

Approved as complying with the Florida Building Code
Date 04/15/2009
NOA# 08-1211.04
Miami Dade Product Control Division
By

Drawing Number
09-057

CONNECTION 8
MULLION BARS ANCHORAGE
FLOOR/CEILING MOUNTED TO CONCRETE

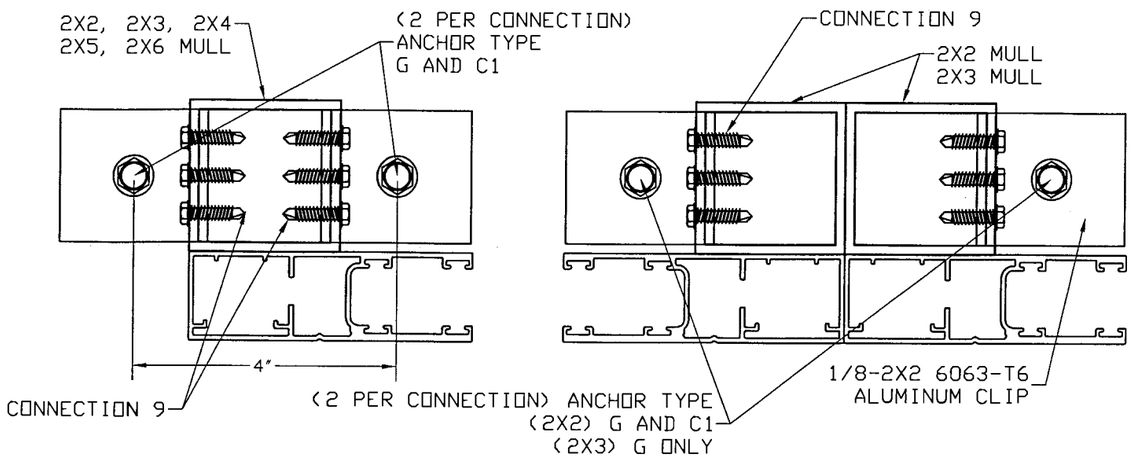

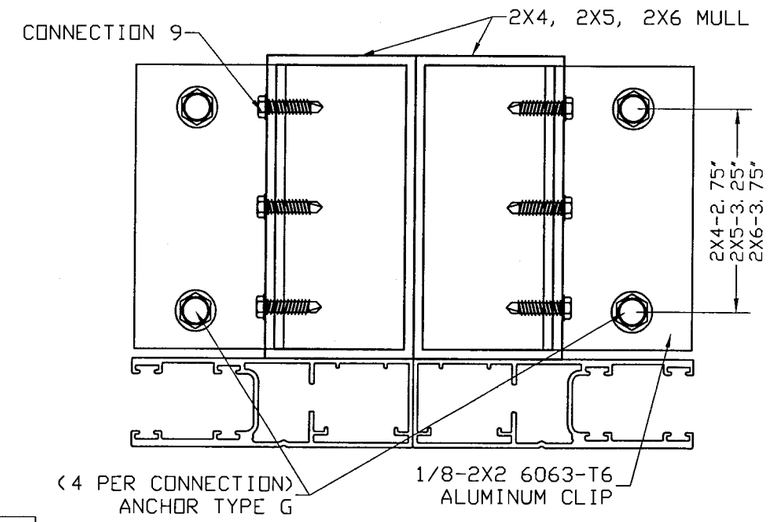

CONNECTION 8
APPLICABLE ONLY FOR
ANCHORS G AND C1

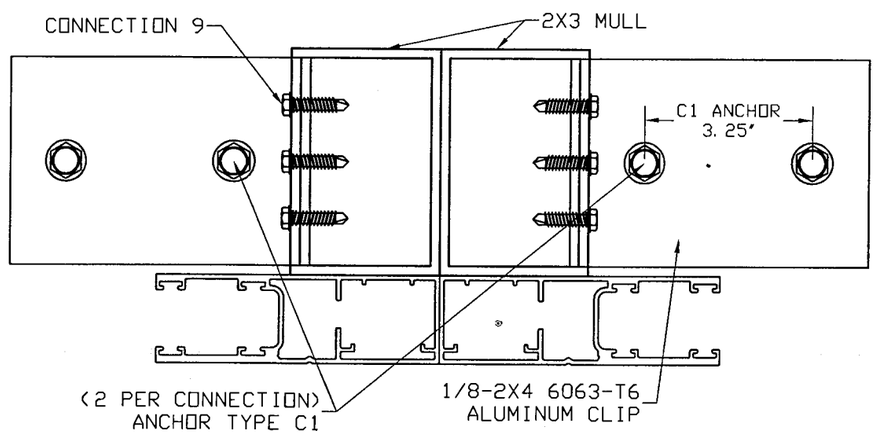

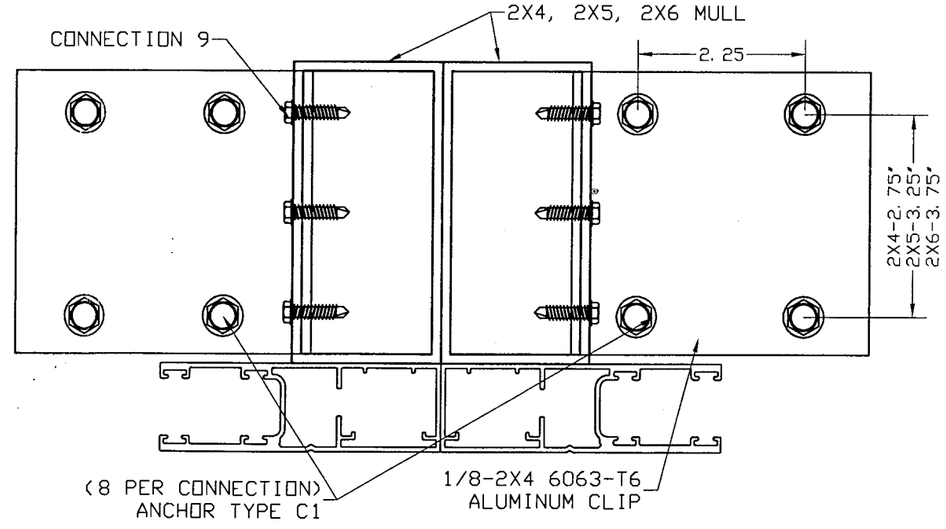

CONNECTION 9
CLIP ANCHORED TO MULLION BAR

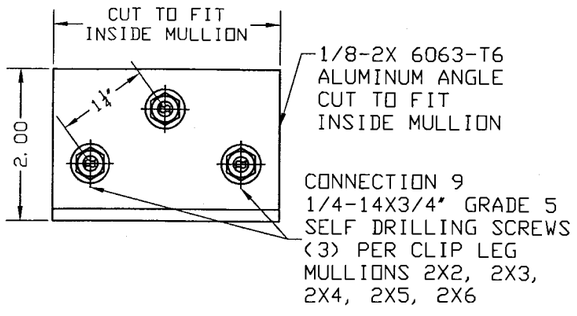

ANCHOR SCHEDULE

TYPE	DESCRIPTION	MANUFACTURER	EMBEDMENT	ED	BASE MATERIAL
C1	5/16" TAPCON	ITW	2 1/4"	3 1/8"	2899 psi CONCRETE
G	3/8" WEDGE BOLTS	POWERS	2 1/2"	4"	3000 psi CONCRETE

NOTES: 1- ED - EDGE DISTANCE
2- EMBEDMENT DIMENSION ARE TAKEN BEYOND THE WALL DRESSING

MANUFACTURER:
Hurst Hurricane Shutters
6865 NW 36th AVE.
MIAMI, FLORIDA 33147
TEL.: (305) 635-0900
FAX.: (305) 634-9078

PRODUCT:

HI-ROLLER 50
EXTRUDED ALUMINUM
ROLL-UP SHUTTER

Engineering:
EngCo Inc.
CA 8116
6971 W. Sunrise Blvd. 104
Plantation, Fl. 33313
ENGCO@AOL.COM

MAR 19 2009
Engineer Seal
Pedro De Figueiredo, PE 52609

DRAFTING:
PK DRAFTING & MORE

Date: 10/15/08
Scale: NA
Design by: PPMF

MIAMI-DADE BCCO:

Approved as complying with the
Florida Building Code
Date 04/15/2009
NOA# 08-1211.04
Miami Dade Product Control
Division
By

Drawing Number
09-057

CONNECTION 11
MULLION BARS ANCHORED TO WALL

SINGLE MULLION
CONNECTION 11 SELECTION

MULLION TYPE	TYPE OF ANCHORS			
	A	B	C1/C2/G	E
2x2	11.2	11.4	11.1	11.2
2x3	11.2	11.5	11.2	11.2
2x4	11.2	11.5	11.2	11.2
2x5	11.3	----	11.2	11.3
2X6	11.3	----	11.2	11.3

DUAL MULLIONS
CONNECTION 11 SELECTION

MULLION TYPE	TYPE OF ANCHORS			
	A	B	C1/C2/G	E
2x2	11.7	11.9	11.6	11.7
2x3	11.7	11.10	11.7	11.7
2x4	11.8	11.10	11.7	11.7
2x5	11.8	----	11.7	11.8
2X6	11.8	----	11.7	11.8

	ANCHOR TYPE			
	A/B	E	C1/C2	G
S	3.0	2.0	3.75	4.0
ED	2.5	1.0	4.00	4.0

S - ANCHOR SPACING
ED - EDGE DISTANCE

CONNECTION 11.1
SINGLE MULLION
ONE ANCHOR

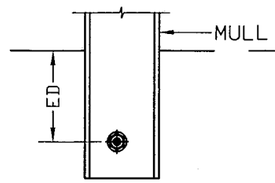

CONNECTION 11.2
SINGLE MULLION
TWO ANCHORS

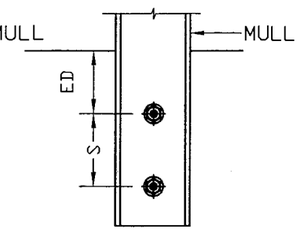

CONNECTION 11.3
SINGLE MULLION
THREE ANCHORS

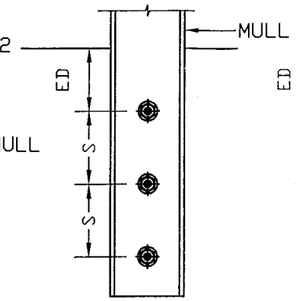

CONNECTION 11.4
SINGLE MULLION
FOUR ANCHORS

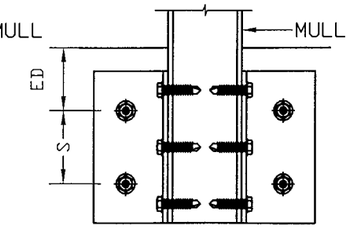

CONNECTION 11.5
SINGLE MULLION
SIX ANCHORS

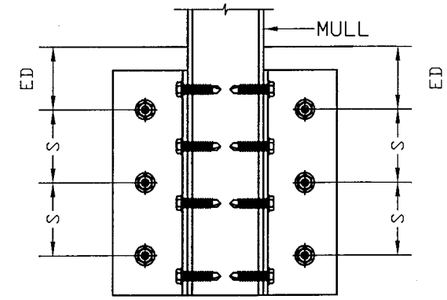

CONNECTION 11.6
DUAL MULLIONS
TWO ANCHORS

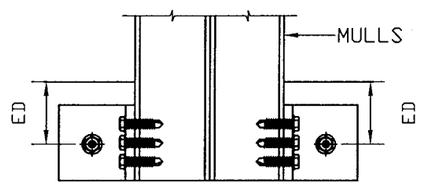

CONNECTION 11.7
DUAL MULLIONS
FOUR ANCHORS

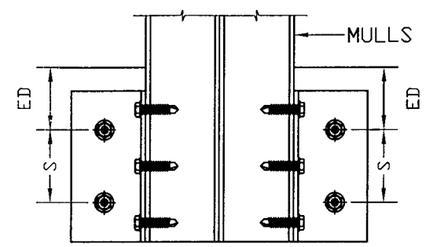

CONNECTION 11.8
DUAL MULLIONS
SIX ANCHORS

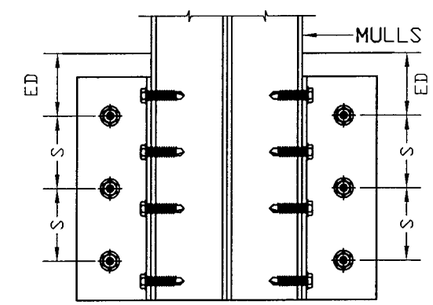

CONNECTION 11.10
DUAL MULLIONS
12 ANCHORS

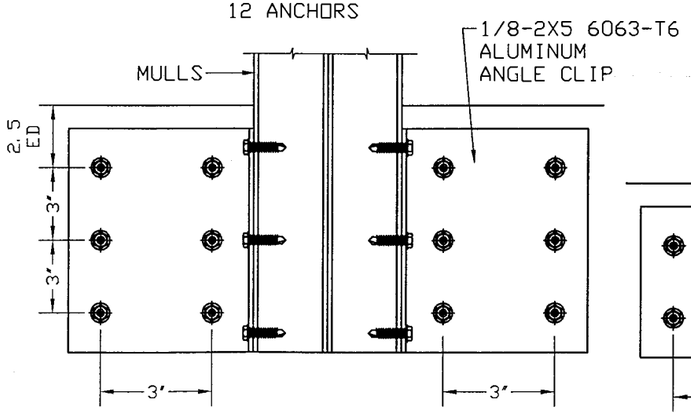

CONNECTION 11.9
DUAL MULLIONS
EIGHT ANCHORS

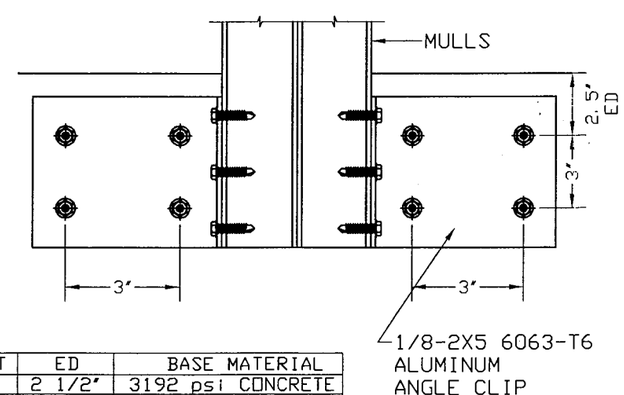

ANCHOR SCHEDULE

TYPE	DESCRIPTION	MANUFACTURER	EMBEDMENT	ED	BASE MATERIAL
A	1/4" TAPCON	ITW	1 3/4"	2 1/2"	3192 psi CONCRETE
B	1/4" TAPCON	ITW	1 1/4"	2 1/2"	HOLLOW BLOCK
C1	5/16" TAPCON	ITW	2 1/4"	3 1/8"	2899 psi CONCRETE
C2	5/16" TAPCON	ITW	2 1/4"	4"	GF BLOCK
E	1/4" TAPCON	ITW	1 3/4"	1"	PT WOOD (SG>=.55)
G	3/8" WEDGE BOLTS	POWERS	2 1/2"	4"	3000 psi CONCRETE

CONNECTION 10
CLIP ANCHORED TO MULLION BAR

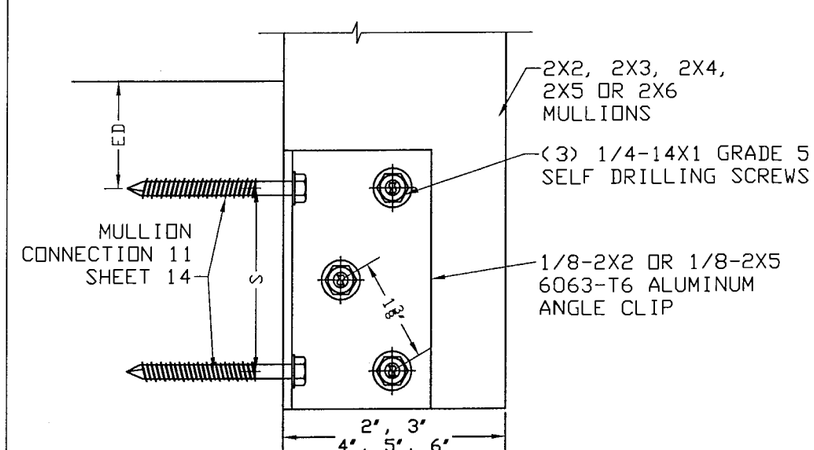

MANUFACTURER:
Hurst Hurricane Shutters
6865 NW 36th AVE.
MIAMI, FLORIDA 33147
TEL.: (305) 635-0900
FAX.: (305) 634-9078

PRODUCT:
HI-ROLLER 50
EXTRUDED ALUMINUM
ROLL-UP SHUTTER

Engineering:
EngCo Inc.
CA 8116
6971 W. Sunrise Blvd. 104
Plantation, Fl. 33313
ENGCO@AOL.COM

MAR 19 2009
Engineer Seal
Pedro De Figueiredo, PE 52609

DRAFTING:
PK DRAFTING & MORE

Date: 10/15/08
Scale: NA
Design by: PPMF

MIAMI-DADE BCCO:

Approved as complying with the Florida Building Code
Date 04/15/2009
NOA# 08-1211.04
Miami Dade Product Control Division
By

Drawing Number
09-057

CONNECTION 12
MULLION BARS ANCHORAGE FLOOR/CEILING TO BUILT-OUT TUBE

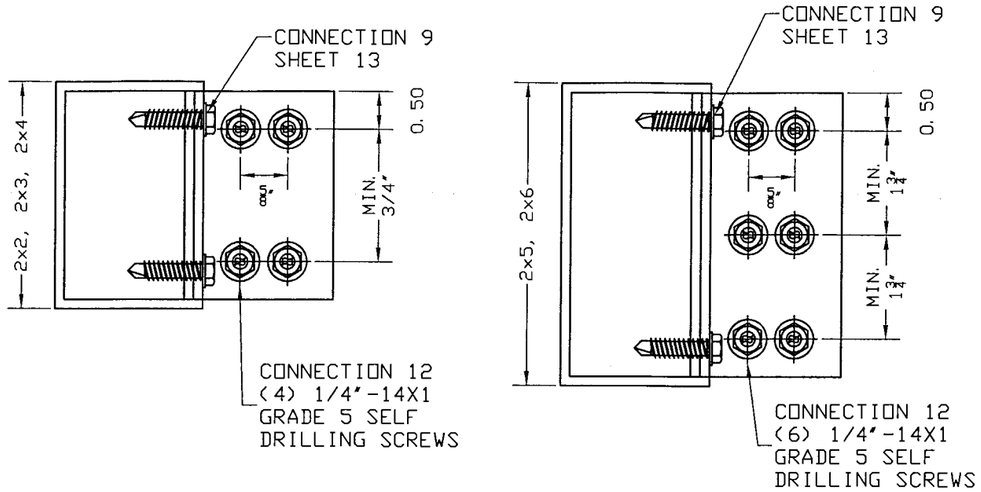

CONNECTION 13
BUILT-OUT WALL ANCHORAGE SUPPORTING MULLIONS

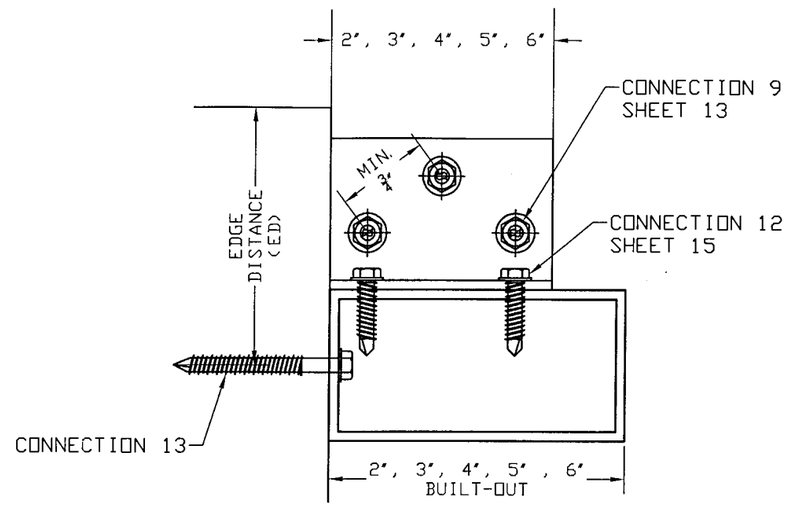

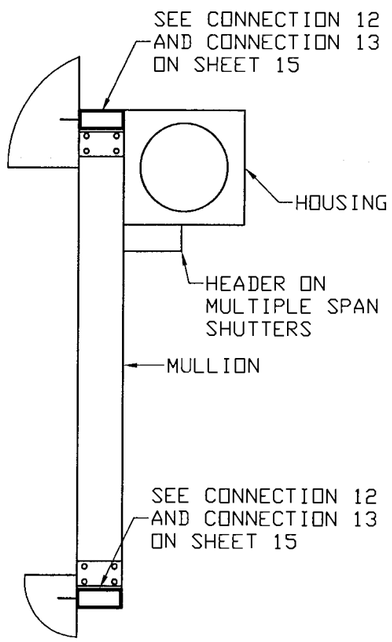

MINIMUM NUMBER OF ANCHORS PER BUILT-OUT

MULLION BARS	ANCHOR TYPE			
	A/E	B	C1/C	G
2x2	3	7	2	2
2x3	4	12	3	2
2x4	5	12	3	3
2x5	5	-	3	3
2x6	5	-	4	3
S	3	3	3.75	4

ANCHOR SCHEDULE

TYPE	DESCRIPTION	MANUFACTURER	EMBEDMENT	ED	BASE MATERIAL
A	1/4" TAPCON	ITW	1 3/4"	2 1/2"	3192 psi CONCRETE
B	1/4" TAPCON	ITW	1 1/4"	2 1/2"	HOLLOW BLOCK
C1	5/16" TAPCON	ITW	2 1/4"	3 1/8"	2899 psi CONCRETE
C2	5/16" TAPCON	ITW	2 1/4"	4"	GF BLOCK
E	1/4" TAPCON	ITW	1 3/4"	1"	PT WOOD (SG>=.55)
G	3/8" WEDGE BOLTS	POWERS	2 1/2"	4"	3000 psi CONCRETE

NOTES: 1- ED - EDGE DISTANCE
2- EMBEDMENT DIMENSION ARE TAKEN BEYOND THE WALL DRESSING

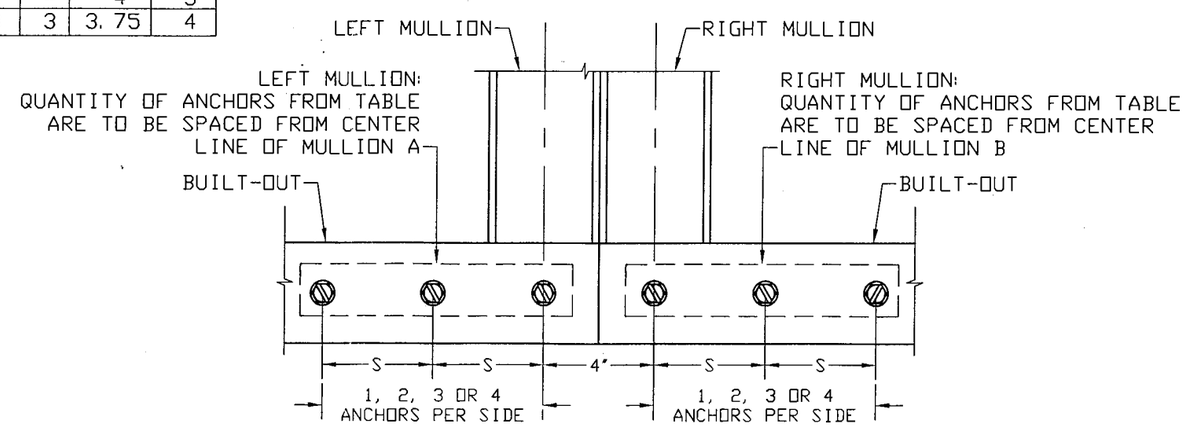

MANUFACTURER:
Hurst Hurricane Shutters
6865 NW 36th AVE.
MIAMI, FLORIDA 33147
TEL.: (305) 635-0900
FAX.: (305) 634-9078

PRODUCT:

HI-ROLLER 50
EXTRUDED ALUMINUM ROLL-UP SHUTTER

Engineering:
EngCo Inc.
CA 8116
6971 W. Sunrise Blvd. 104
Plantation, Fl. 33313
ENGCO@AOL.COM

MAR 19 2009
Engineer Seal
Pedro De Figueiredo, PE 52609

DRAFTING:
PK DRAFTING & MORE

Date: 10/15/08
Scale: NA
Design by: PPMF

MIAMI-DADE BCCO:

Approved as complying with the Florida Building Code
Date 04/15/2009
NOA# 09-1211.04
Miami Dade Product Control Division
By

Drawing Number
09-057