MIAMI-DADE COUNTY
BUILDING CODE COMPLIANCE OFFICE (BCCO)
PRODUCT CONTROL DIVISION

MIAMI-DADE COUNTY, FLORIDA
METRO-DADE FLAGLER BUILDING
140 WEST FLAGLER STREET, SUITE 1603
MIAMI, FLORIDA 33130-1563
(305) 375-2901 FAX (305) 372-6339
www.maimidade.gov/buildingcode

NOTICE OF ACCEPTANCE (NOA)

YKK AP America, Inc.
332 Firetower Road
Dublin, GA 31021

SCOPE:

This NOA is being issued under the applicable rules and regulations governing the use of construction materials. The documentation submitted has been reviewed by Miami-Dade County Product Control Division and accepted by the Board of Rules and Appeals (BORA) to be used in Miami Dade County and other areas where allowed by the Authority Having Jurisdiction (AHJ).

This NOA shall not be valid after the expiration date stated below. The Miami-Dade County Product Control Division (In Miami Dade County) and/or the AHJ (in areas other than Miami Dade County) reserve the right to have this product or material tested for quality assurance purposes. If this product or material fails to perform in the accepted manner, the manufacturer will incur the expense of such testing and the AHJ may immediately revoke, modify, or suspend the use of such product or material within their jurisdiction. BORA reserves the right to revoke this acceptance, if it is determined by Miami-Dade County Product Control Division that this product or material fails to meet the requirements of the applicable building code. This product is approved as described herein, and has been designed to comply with the High Velocity Hurricane Zone of the Florida Building Code.

DESCRIPTION: Series "YHC-300-O/G Hurricane" Single Glazed Aluminum Curtain Wall System – L.M.I.

APPROVAL DOCUMENT: Drawing No. **YHC-300-OG-SL**, titled "YHC-300 O/G Hurricane Curtain Wall Single Glazing Large Missile Impact Rated", sheets 1 through 22, 22A, 22B, 23, 23A, 24, 25 & 26, prepared by manufacturer, dated 08/05/02 with revision "**C**" dated 11/13/08, signed and sealed by Walter A. Tillit, Jr., P.E., and bearing the Miami-Dade County Product Control Revision stamp with the Notice of Acceptance number and expiration date by the Miami-Dade County Product Control Division.

MISSILE IMPACT RATING: Large and Small Missile Impact

SUPERSEDING: Notice of Acceptance No. **06-0306.02**, issued to YKK AP America, Inc.

LABELING: Each unit shall bear a permanent label with the manufacturer's name or logo, city, state and following statement: "Miami-Dade County Product Control Approved", unless otherwise noted herein.

RENEWAL of this NOA shall be considered after a renewal application has been filed and there has been no change in the applicable building code negatively affecting the performance of this product.

TERMINATION of this NOA will occur after the expiration date or if there has been a revision or change in the materials, use, and/or manufacture of the product or process. Misuse of this NOA as an endorsement of any product, for sales, advertising or any other purposes shall automatically terminate this NOA. Failure to comply with any section of this NOA shall be cause for termination and removal of NOA.

ADVERTISEMENT: The NOA number preceded by the words Miami-Dade County, Florida, and followed by the expiration date may be displayed in advertising literature. If any portion of the NOA is displayed, then it shall be done in its entirety.

INPECTION: A copy of this entire NOA shall be provided to the user by the manufacturer or its distributors and shall be available for inspection at the job site at the request of the Building Official.

This NOA **revises and supersedes NOA # 06-0306.02** and consists of this page 1 and evidence pages E-1 and E-2, as well as approval document mentioned above.

The submitted documentation was reviewed by **Manuel Perez, P.E.**

MIAMI-DADE COUNTY APPROVED

YKK AP America, Inc.

NOTICE OF ACCEPTANCE: EVIDENCE SUBMITTED

A. DRAWINGS

1. Manufacturer's die drawings and sections.
2. Drawing No. **YHC-300-OG-SI**, titled "YHC-300 O/G Hurricane Curtain Wall Single Glazing Large Missile Impact Rated", sheets 1 through 22, 22A, 22B, 23, 23A, 24, 25 & 26, prepared by manufacturer, dated 08/05/02 with revision "**C**" on 11/13/08, signed and sealed by Walter A. Tillit Jr., P.E.

B. TESTS

1. Test report on: 1) Air Infiltration Test, per FBC, TAS 202-94
   2) Uniform Static Air Pressure Test, per FBC, TAS 202-94
   3) Water Resistance Test, per FBC, TAS 202-94
   4) Large Missile Impact Test per FBC, TAS 201-94
   5) Cyclic Wind Pressure Loading per FBC, TAS 203-94

   along with marked drawings and installation diagram of unit of O-O, prepared by Hurricane Test Laboratory, Inc., Test Report No. **HTL- 0231-0401-01** dated April 11, 2001, signed and sealed by Vinu J. Abraham, P.E.
   (Submitted under NOA# 02-1118.02)

C. CALCULATIONS

1. Revised Anchor Calculations and structural analysis, complying with FBC-2004, prepared by TILTECO Inc., dated February 07, 2006, signed and sealed by Walter A. Tillit, P.E.
   Complies with ASTM- E1300-98
   (Submitted under NOA# 06-0306.02)

D. QUALITY ASSURANCE

1. Miami - Dade Building Code Compliance Office (BCCO).

E. MATERIAL CERTIFICATIONS

1. Notice of Acceptance No. **07-1116.04** issued to E.I. DuPont DeNemours & Co., Inc. for their "**DuPont Sentry Glass ® Plus**" dated 01/03/08, expiring on 01/14/12.
2. Notice of Acceptance No. **07-1116.11** issued to SAF-GLASS for their "**SAF-GLAS Polycarbonate Laminate**" dated 12/12/07, expiring on 12/16/12.
3. Notice of Acceptance No. **08-0206.01** issued to Solutia Inc. for their **"Saflex HP Glass Interlayer"** dated 04/17/08, expiring on 04/17/13.

F. STATEMENTS

1. Statement letter of compliance, dated November 13, 2008, signed and sealed by Walter A. Tillit, P.E.

Manuel Perez

Manuel Perez, P.E.
Product Control Examiner
NOA No. 08-1224.15
Expiration Date: March 04, 2011
Approval Date: January 28, 2009

NOTICE OF ACCEPTANCE: EVIDENCE SUBMITTED

F. STATEMENTS (CONTINUED)

2. Letter of compliance issued by YKK AP America, Inc., dated December 19, 2008, signed by Chris Moody.
3. Statement letter of conformance and no financial interest, dated March 01, 2006, signed and sealed by Walter A. Tillit, P.E.
   (Submitted under NOA# 06-0306.02)
4. Laboratory compliance letter for Test Report No. **HTL- 0231-0401-01** issued by Hurricane Test Laboratory, Inc., dated April 11, 2001, signed and sealed by Vinu J. Abraham, P.E.
   (Submitted under NOA# 02-1118.02)

G. OTHERS

1. Letter from the consultant, dated April 20, 2006 stating that the product is in compliance with the Florida Building Code (FBC).
   (Submitted under NOA# 06-0306.02)
2. Notice of Acceptance No. **06-0306.02,** issued to YKK AP America, Inc., for **Series "YHC-300 O/G" Hurricane Curtain Wall Single Glazing – L.M.I.,** dated 05/18/06 and expiring on 05/04/11.

Manuel Perez, P.E.
Product Control Examiner
NOA No. 08-1224.15
Expiration Date: March 04, 2011
Approval Date: January 28, 2009

REV.	DESCRIPTION	BY	DATE
A	INDEX SHEET # & GENERAL NOTES	L.G.	2/28/06
B	GENERAL NOTE 6, ASTM E 1300-98	L.G.	4/7/06
C	CANCELLED GENERAL NOTE #4	F.P.	11/13/08

YHC-300 O/G HURRICANE CURTAIN WALL SINGLE GLAZING
LARGE MISSILE IMPACT RATED
(SEE SEPARATE NOA FOR SMALL MISSILE AND/OR INSULATED GLAZING)

INDEX OF DRAWINGS

TYPES	CONTENTS	SHEET #
GENERAL	COVER SHT. & GENERAL NOTES	1
ELEVATIONS	ELEVATIONS KEYED TO SINGLE GLAZING DETAILS	2
GEN. DETAILS	TYPICAL SEALANT DETAILS	3
DETAILS FOR SINGLE GLAZING	TYPICAL DETAILS	4
	90° CORNER	5
	HEAD OPTIONS	6
	SILL OPTIONS	7
	STOREFRONT & DOOR	8,9
SECTION & ANCHOR DETAILS	INTERMEDIATE HORIZONTALS	10
	HEAD ANCHOR OPTIONS	11
	SILL ANCHOR OPTIONS	12
	SPLICE & ANCHOR CLIP	13,14,15
	MID-ANCHOR CLIP	16,17,18
	STOREFRONT & DOOR ANCHOR	19
MATERIAL LIST	BILL OF MATERIALS FOR SINGLE GLAZING	20
DESIGN LOAD VERIFICATION CHARTS.	MULLION CHART	21
	ANCHOR BOLT GUIDE -SINGLE SPAN-	22, 22A, 22B A
	ANCHOR BOLT GUIDE -TWIN SPAN-	23, 23A A
	GLASS CHARTS	24,25,26

GENERAL NOTES: A

1. MAXIMUM DESIGN PRESSURE RATING IS +90 PSF, -90 PSF.
DESIGN WIND LOADS SHALL DETERMINED AS PER SECTION 1620 OF THE ABOVE MENTIONED CODE. IN ORDER TO VERIFY THAT ALUMINUM PROFILES AND ANCHORS ON THIS DWG. AS TESTED WERE NOT OVERSTRESSED A 33% INCREASE IN ALLOWABLE STRESSES FOR WIND LOADS WAS NOT USED IN THEIR ANALYSIS.

2. SEE SHEET 21 TO DETERMINE MAX. DESIGN LOAD CAPACITY OF MULLION FOR VARIOUS CONFIGURATIONS AND REINFORCEMENT. THE RESULT SHALL BE USED AS THE SYSTEM MAXIMUM LOAD CAPACITY.

3. REFER TO ANCHOR SCHEDULE ON SHEET 2 FOR ANCHOR TYPE IDENTIFICATION. ALSO, SEE SHEETS 22, 22A, 22B & 23, 23A TO VERIFY THE DESIGN LOAD CAPACITY OF VARIOUS ANCHOR BOLTS TO BE USED WITH THE END ANCHORS. RESULTS FROM THIS VERIFICATION SHALL NOT EXCEED THE CAPACITY OF THE SYSTEM AS PREVIOUSLY DETERMINED ON NOTE 2.

5. ALUMINUM ALLOY ON ALL STRUCTURAL MEMBERS SHALL BE 6063-T6 WITH A MINIMUM YIELD STRENGTH OF 25 KSI. ALL PRODUCTS WITH THE MARKING "YKK AP AMERICA" AND "MIAMI-DADE COUNTY PRODUCT CONTROL APPROVED" ARE IN COMPLIANCE WITH THIS SPECIFICATION FOR STRUCTURAL MEMBERS.

6. SEE SHEETS 24 TO 26 TO DETERMINE DESIGN LOAD CAPACITY OF VARIOUS TYPES OF GLASS FOR DIFFERENT OPENING SIZES, BASED ON ASTM E 1300-98.
B HOWEVER, OTHER CONSIDERATIONS OF THE BUILDING CODE, REGARDING THE USE OF SAFETY GLASS, ETC. SHALL BE APPLIED AS NECESSARY. ALSO, GLASS MANUFACTURERS SHALL BE CONSULTED FOR THEIR RECOMMENDATIONS.

7. SHOP DRAWINGS PREPARED BASED ON THIS APPROVAL AND TAKING INTO ACCOUNT THE SPECIFIC JOB CONDITIONS, SHALL BE SUBMITTED TO THE BUILDING OFFICIAL AS PART OF THE PERMIT DOCUMENTS.

8. STRUCTURAL STEEL NOTED ON THESE DRAWINGS AS "STEEL BY OTHERS" MUST WITHSTAND THE LOADS IMPOSED BY THE CURTAIN WALL SYSTEM.

9. ALL ALUMINUM IN CONTACT WITH STEEL SHALL COMPLY WITH SECTION 2003.8.4 OF THE FLORIDA BUILDING CODE.

GLASS TYPES APPROVED TO BE USED WITH THIS PRODUCT

(SEE SHEETS 24 TO 26 TO DETERMINE DESIGN LOAD CAPACITY OF A PARTICULAR TYPE OF GLASS FOR DIFFERENT OPENING SIZES)

GLASS TYPE	DESCRIPTION	OVERALL NOMINAL THICKNESS	GLASS STR. QUALIFIED
A1 A2 A3	5/16" SENTRYGLAS (1/4" GLASS + 0.052" SENTRYGLAS COMPOSITE)	5/16"	A1 = ANNEALED A2 = HEAT STR. A3 = TEMPERED
E1 E2 E3	7/16" SAF-GLAS (3/16" GLASS + 0.070" POLYCARBONATE BY SECURITY IMPACT GLASS + 3/16" GLASS)	7/16"	E1 = ANNEALED E2 = HEAT STR. E3 = TEMPERED
F1 F2 F3	9/16" SAF-GLAS (1/4" GLASS + 0.070" POLYCARBONATE BY SECURITY IMPACT GLASS + 1/4" GLASS)	9/16"	F1 = ANNEALED F2 = HEAT STR. F3 = TEMPERED
G	9/16" SAFLEX HP (1/4" GLASS + 0.10" SAFLEX HP BY SOLUTIA + 1/4" GLASS) HEAT STRENTHENED GLASS ONLY).	9/16"	HEAT STR. ONLY

PRODUCT REVISED
as complying with the Florida Building Code
Acceptance No 08-1224.15
Expiration Date 03/04/2011
By Miami Dade Product Control Division

RESERVED FOR METRO-DADE USE ONLY

YKK AP America
YKK AP AMERICA, INC.
5630 GWALTNEY DRIVE
ATLANTA, GEORGIA 30336

SYSTEM	SCALE
YHC 300 SINGLE GLAZING SYSTEM	NONE
DESCRIPTION: TABLE OF CONTENTS & NOTES	
DRAWING NUMBER: YHC-300-OG-SL	REV. A

APPROVED BY	DRAWN BY	DATE	SHEET NO.
JIA	RTB	8/5/02	1 of 26

NOV 13 2008

G:\SYSDWGS\YHC300OG\DADE\SINGLE\LARGEMISSILE\YHC300p01.DWG

REV.	DESCRIPTION	BY	DATE
A	TO MEET FBC 2004, ADD ANCHOR	L.G.	2/28/06
B	NOTE 1, DOORS/STOREFRONTS N.O.A.	L.G.	4/7/06

YHC 300 OG SYSTEM – LARGE MISSILE

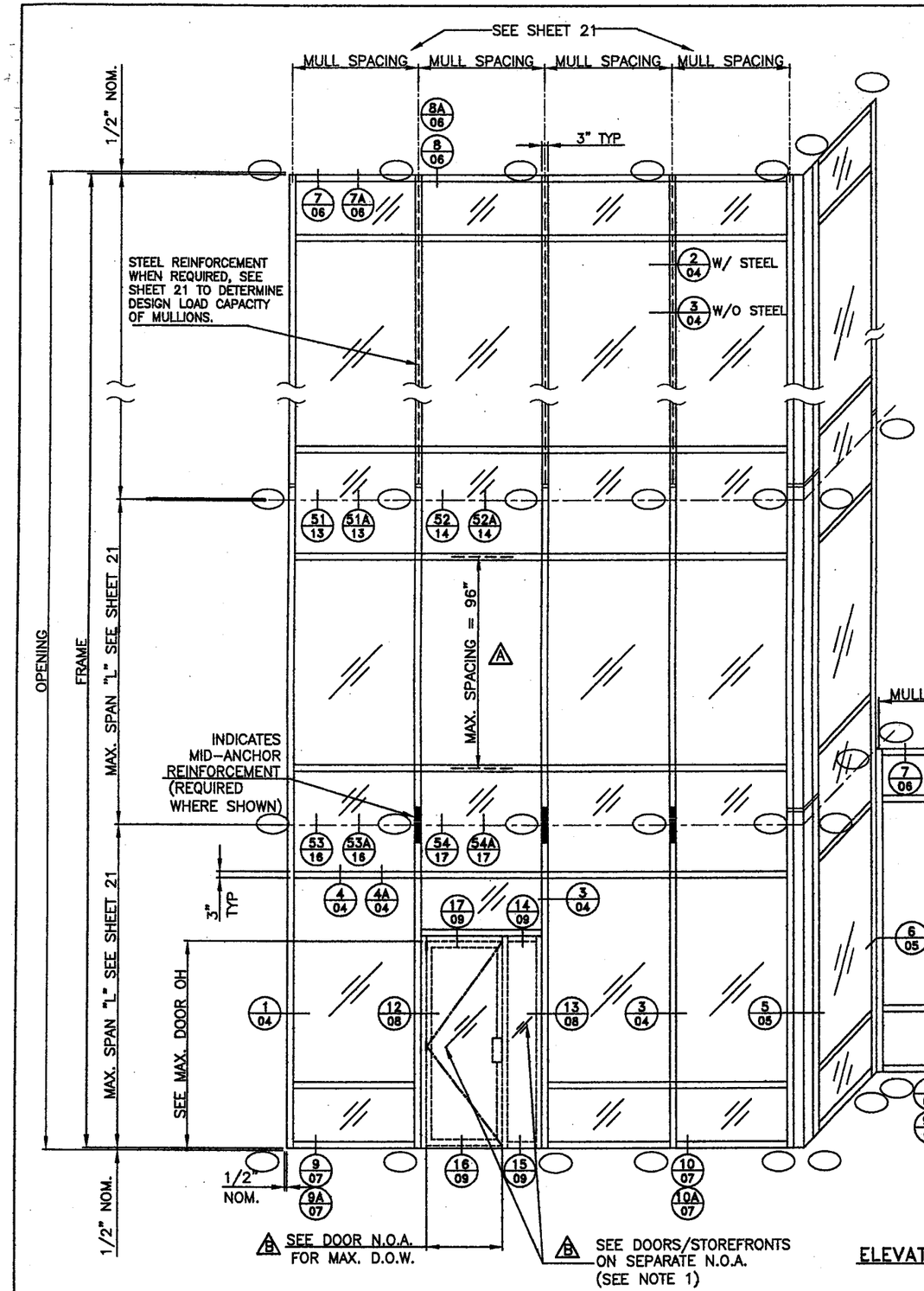

GENERAL NOTES FOR SINGLE GLAZING.

1. DOOR AND STOREFRONT DETAILED HEREIN ARE:
   DOOR; YKK MODEL 35H (PER CURRENT METRO–DADE N.O.A.)
   STOREFRONT; YKK MODEL YHS–50 (PER CURRENT METRO–DADE N.O.A.)
   REFER TO SPECIFIC DOCUMENTS ON THOSE PRODUCTS FOR FURTHER INFORMATION.
   B DOORS AND STOREFRONTS N.O.A.S ARE NOT PART OF THIS APPROVAL.

2. SEE SHEET 21 TO DETERMINE DESIGN LOAD CAPACITY OF MULLIONS WITH AND W/OUT STEEL REINFORCEMENT.

3. SEE SHEETS 24 TO 26 TO DETERMINE DESIGN LOAD CAPACITY OF VARIOUS TYPES OF GLASS FOR DIFFERENT OPENING SIZES.

ANCHOR SCHEDULE

SYMBOL	DESCRIPTION	SILL @ JAMB	SILL @ MULLION	HEAD @ JAMB	HEAD @ MULLION	INTERM. FLOOR @ JAMB	INTERM. FLOOR @ MULLION	REF. DET'S
J	"J" ANCHOR	•(1)	•(2)					FF/12, GG/12
F	"F" ANCHOR	•		•				BB/11, HH/12
T	"T" ANCHOR		•		•			CC/11, JJ/12
W	WINDLOAD CLIP			•(1)	•(2)	•(1)	•(2)	DD+EE/11, 51/13 52/14, 53A/16
D	DEADLOAD CLIP*					•(1)	•(2)	51A/13, 52A/14 53/16, 54/17
A MT	MODIFIED "T"	•		•				TT/19, UU/19

TYPICAL USE

* ONLY ONE DEADLOAD APPLICATION PER MULLION/JAMB SEGMENT, ANY OTHER ANCHOR IN THE SAME SEGMENT SHALL ALLOW FREE MOVEMENT DUE TO THERMAL EXPANSION. SEGMENTS SHALL BE CONNECTED BY MULLION SPLICE AS SHOWN ON SHEETS 13–15.

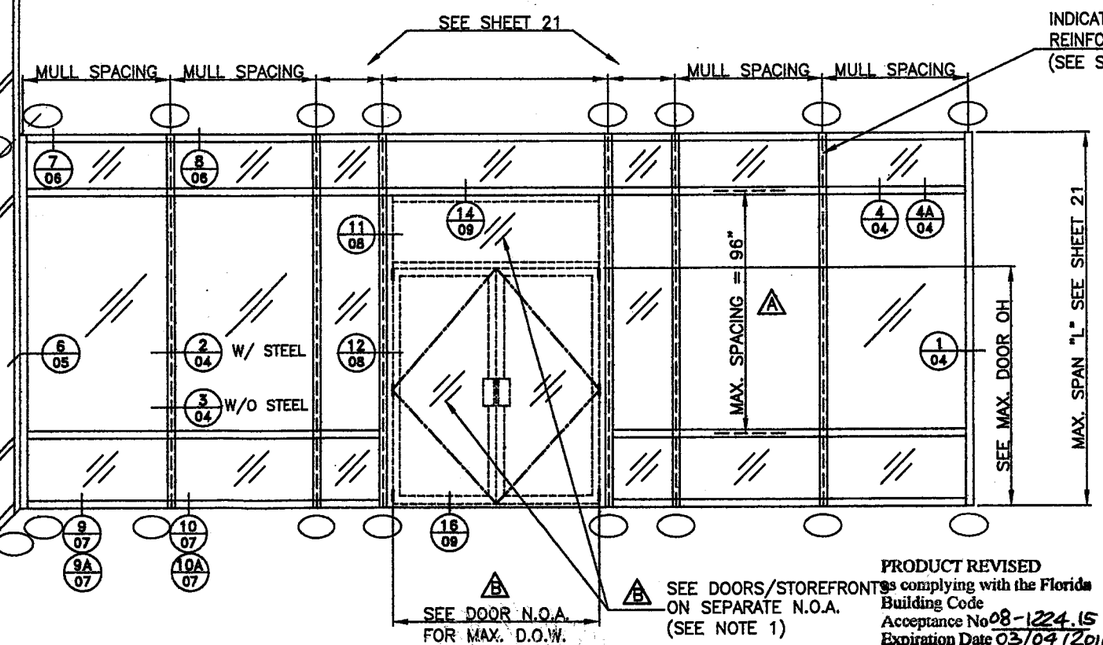

ELEVATION KEYED TO SINGLE GLAZING DETAILS

N.T.S.

PRODUCT REVISED
as complying with the Florida Building Code
Acceptance No 08-1224.15
Expiration Date 03/09/2011
By Miami Dade Product Control Division

APR 12 2006

WALTER A. TILLIT JR., P.E.
STRUCTURAL ENGINEER
FL. LIC.NO. 44167

TILTECO INC.
TILLIT TESTING & ENGINEERING COMPANY
6355 NW 36th STREET, STE. 305
MIAMI, FLORIDA 33166
FL E.B. LICENSE No. 0006719

PRODUCT REVISED
as complying with the Florida Building Code
Acceptance No 06-0306.02
Expiration Date 03/09/11
By Miami Dade Product Control Division

RESERVED FOR METRO–DADE USE ONLY

YKK AP AMERICA, INC.
5630 GWALTNEY DRIVE
ATLANTA, GEORGIA 30336

SYSTEM	SCALE
YHC 300 SINGLE GLAZING SYSTEM	AS SHOWN
DESCRIPTION: ELEVATION	
DRAWING NUMBER: YHC–300–OG–SL	REV. A

APPROVED BY	DRAWN BY	DATE	SHEET NO.
JIA	RTB	8/5/02	2 OF 26

G:\SYSDWGS\YHC300OG\DADE\SINGLE\LARGEMISSILE\YHC300D02.DWG

REV.	DESCRIPTION	BY	DATE
A	NO CHANGE THIS SHEET	JIA	2/6/06

TYPICAL SEALING DETAIL

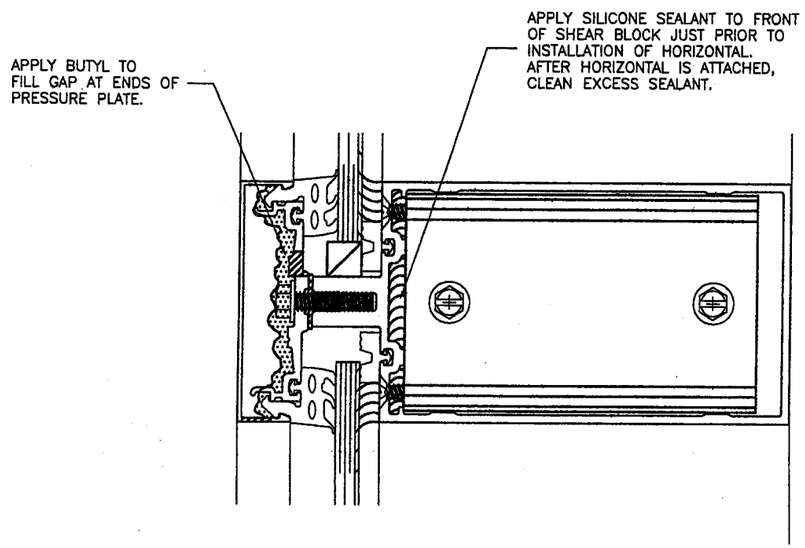

HORIZONTAL TO VERTICAL

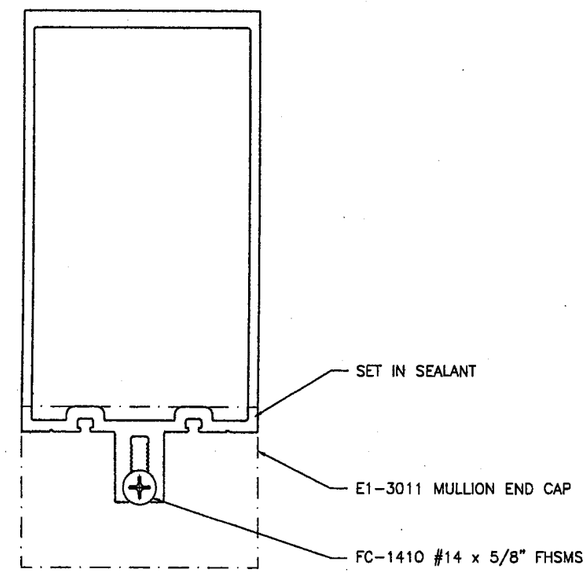

MULLION END CAP

(APPLY BEFORE MULLION ERECTION.)

PRODUCT REVISED
as complying with the Florida
Building Code
Acceptance No 08-1224.15
Expiration Date 03/04/2011
By
Miami Dade Product Control
Division

PRODUCT REVISED
as complying with the Florida
Building Code
Acceptance No 06-0306.02
Expiration Date 03/04/11
By
Miami Dade Product Control
Division

WALTER A. TILLIT JR., P.E.
STRUCTURAL ENGINEER
FL. LIC.NO. 44167

APR 12 2006

TILTECO INC.

TILLIT TESTING & ENGINEERING COMPANY
6355 NW 36th STREET, STE. 305
MIAMI, FLORIDA 33166
FL E.B. LICENSE No. 0006719

RESERVED FOR METRO-DADE USE ONLY

YKK ap America

YKK AP AMERICA, INC.
5630 GWALTNEY DRIVE
ATLANTA, GEORGIA 30336

SYSTEM	SCALE
YHC 300 SINGLE GLAZING SYSTEM	1/2

DESCRIPTION: TYPICAL SEALING AND GLAZING DETAILS

DRAWING NUMBER	REV.
YHC-300-OG-SL	A

APPROVED BY	DRAWN BY	DATE	SHEET NO.
JIA	RTB	8/5/02	3 OF 26

G:\SYSDWGS\YHC3000G\DADE\SINGLE\LARGEMISSILE\YHC300oG3.DWG

REV.	DESCRIPTION	BY	DATE
A	SECTION 2	JIA	2/6/06

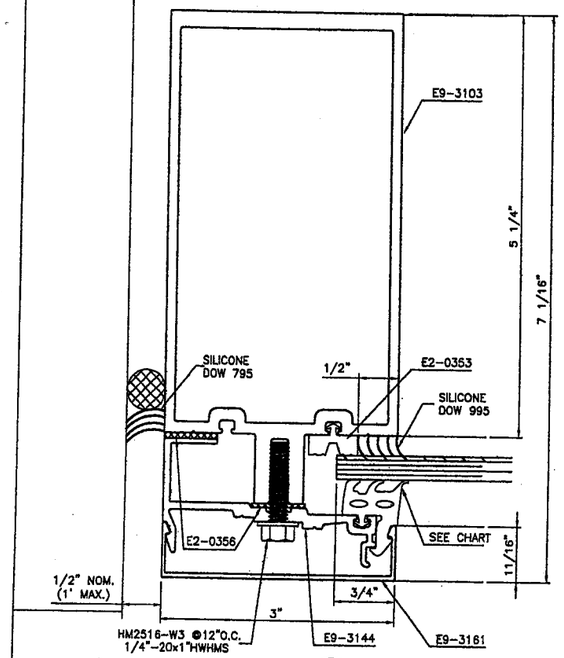

SECTION 1

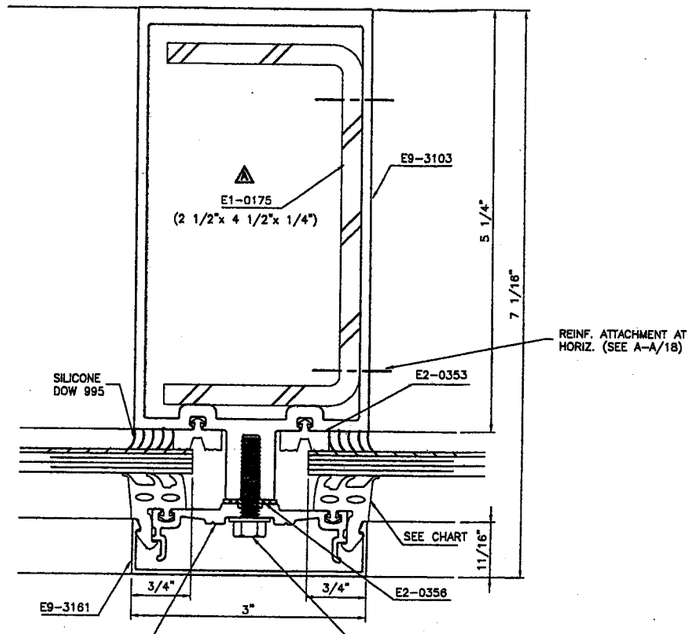

SECTION 2

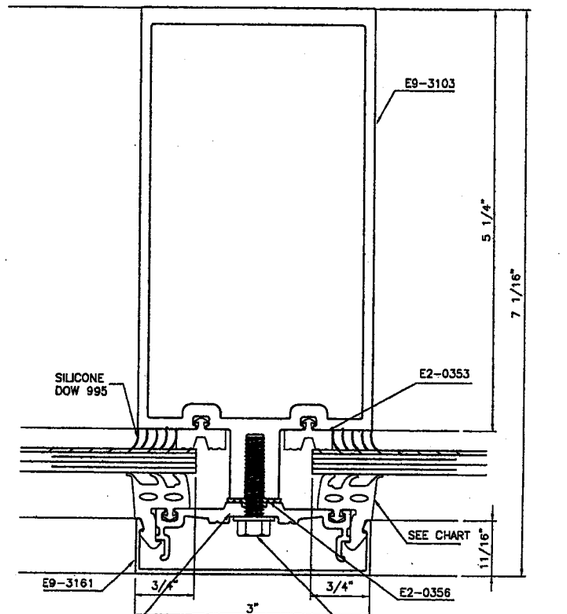

SECTION 3

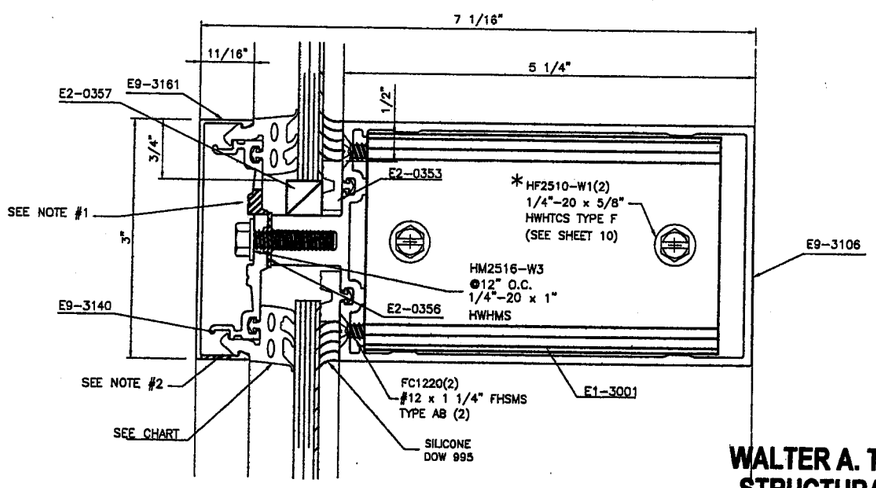

SECTION 4

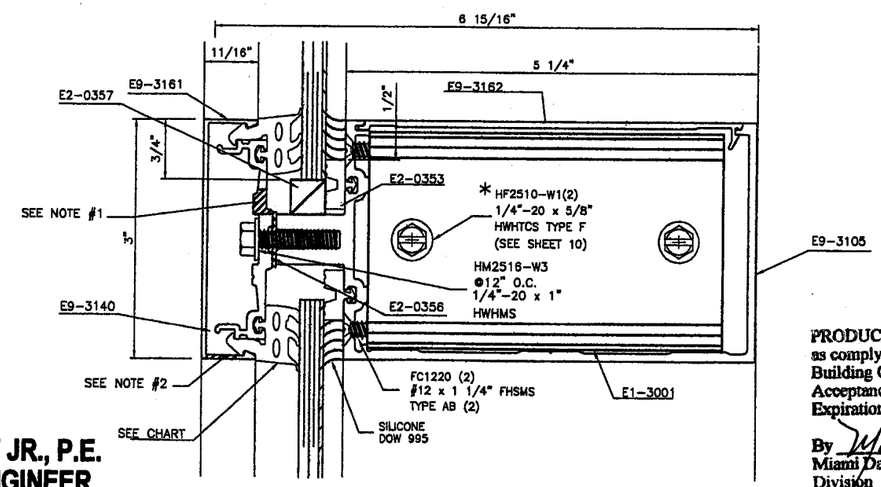

SECTION 4A

TILLECO INC.

TILLIT TESTING & ENGINEERING COMPANY
6355 NW 36th STREET, STE. 305
MIAMI, FLORIDA 33166
FL E.B. LICENSE No. 0008719

NOTE:
1. 5/16" DIA. WEEPHOLE. (3)/HORIZ. LOCATED (1) @ 3" FROM EACH END & (1) @ MID-SPAN.
2. 5/16" DIA. WEEPHOLE. (2)/HORIZ. LOCATED @ 1/3 D.L.O. FROM ENDS.
3. EXTERIOR GASKET CHART

GL. NOMINAL THICKNESS	USE GASKET
5/16"	E2-0360
7/16"	E2-0352
9/16"	E2-0351

WALTER A. TILLIT JR., P.E.
STRUCTURAL ENGINEER
FL. LIC.NO. 44167

APR 12 2006

PRODUCT REVISED
as complying with the Florida Building Code
Acceptance No 08-1224.15
Expiration Date 03/04/2011
By Manuel Perez
Miami Dade Product Control Division

*REPLACE 5/8" LONG SCREW(HF2510) WITH 1" LONG SCREW(HF2516) FOR ATTACHMENT OF STEEL REINFORCEMENT WHEN STEEL REINFORCEMENT OCCURS. (SEE A-A ON SHT. 10)

PRODUCT REVISED
as complying with the Florida Building Code
Acceptance No 06-0309.02
Expiration Date 03/04/11
By Manuel Perez
Miami Dade Product Control Division

RESERVED FOR METRO-DADE USE ONLY

YKK AP AMERICA, INC.
5630 GWALTNEY DRIVE
ATLANTA, GEORGIA 30336

SYSTEM	SCALE
YHC 300 SINGLE GLAZING SYSTEM	1/2

DESCRIPTION: MULLION DETAILS

DRAWING NUMBER	REV.
YHC-300-OG-SL	A

APPROVED BY	DRAWN BY	DATE	SHEET NO.
JIA	RTB	8/5/02	4 OF 26

G:\SYSDWGS\YHC3000G\DADE\SINGLE\LARGEMISSILE\YHC300-04.DWG

REV.	DESCRIPTION	BY	DATE
A	NO CHANGE THIS SHEET	JIA	2/6/06

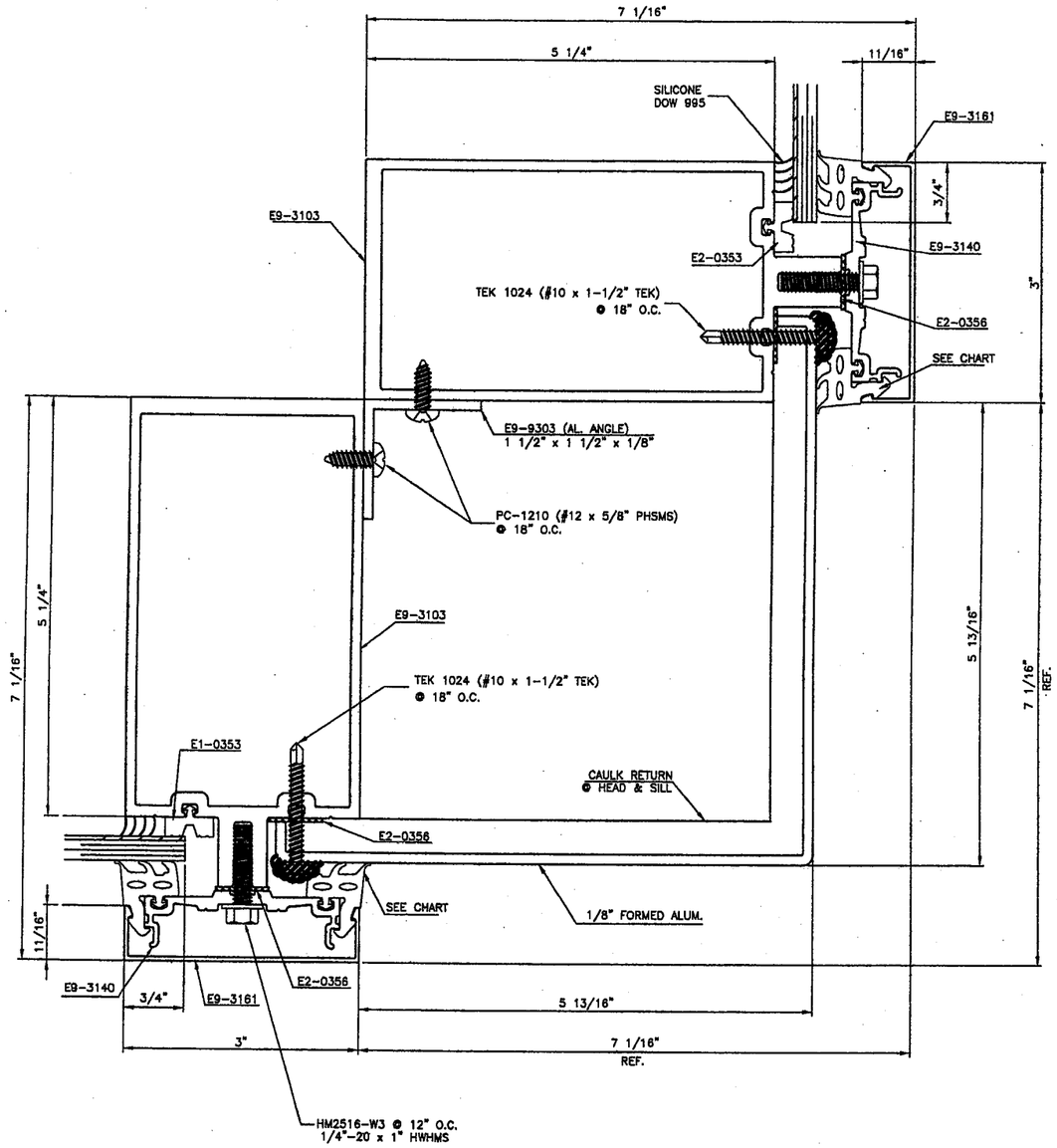

SECTION
OUTSIDE 90° CORNER (5)

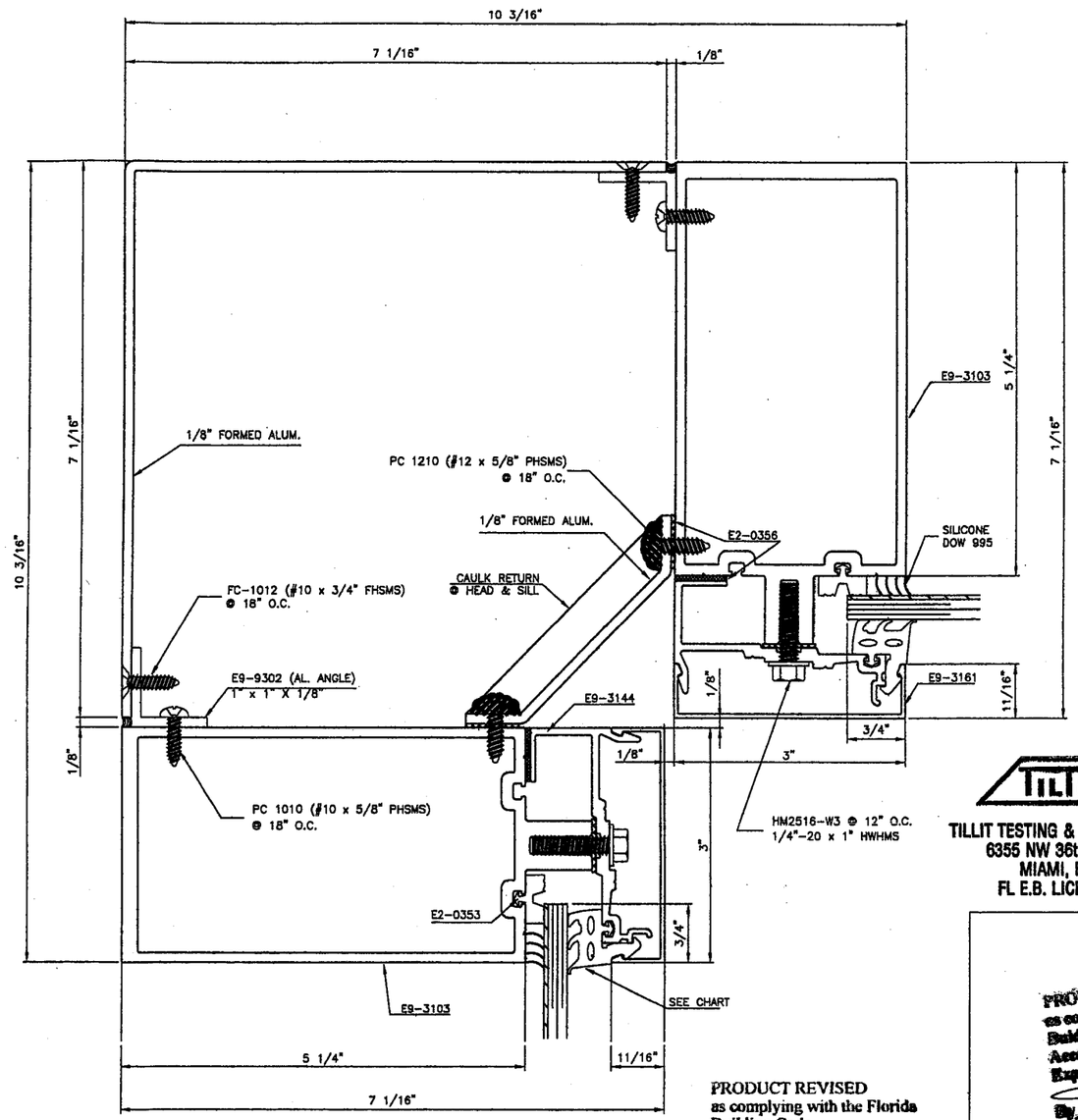

SECTION
INSIDE 90° CORNER (6)

PRODUCT REVISED
as complying with the Florida Building Code
Acceptance No 08-1224.15
Expiration Date 03/04/2011
By Miami Dade Product Control Division

TILTECO INC.

TILLIT TESTING & ENGINEERING COMPANY
6355 NW 36th STREET, STE. 305
MIAMI, FLORIDA 33166
FL E.B. LICENSE No. 0006719

PRODUCT REVISED
as complying with the Florida Building Code
Acceptance No 06-0306.02
Expiration Date 03/04/07
By Miami Dade Product Control Division

RESERVED FOR METRO-DADE USE ONLY

YKK AP America

YKK AP AMERICA, INC.
5630 GWALTNEY DRIVE
ATLANTA, GEORGIA 30336

SYSTEM	SCALE
YHC 300 SINGLE GLAZING SYSTEM	1/2

DESCRIPTION: 90° CORNER DETAILS

DRAWING NUMBER	REV.
YHC-300-OG-SL	A

APPROVED BY	DRAWN BY	DATE	SHEET NO.
JIA	RTB	8/5/02	5 OF 26

WALTER A. TILLIT JR., P.E.
STRUCTURAL ENGINEER
FL. LIC.NO. 44167

APR 12 2006

NOTES:
1. EXTERIOR GASKET CHART

GL. NOMINAL THICKNESS	USE GASKET
5/16"	E2-0360
7/16"	E2-0352
9/16"	E2-0351

G:\SYSDWGS\YHC3000G\DADE\SINGLE\LARGEMISSILE\YHC300005.DWG

REV.	DESCRIPTION	BY	DATE
A	SECTIONS 7, 7A, 8	L.G.	2/28/06

SECTION 7
SHOWING "F" ANCHOR

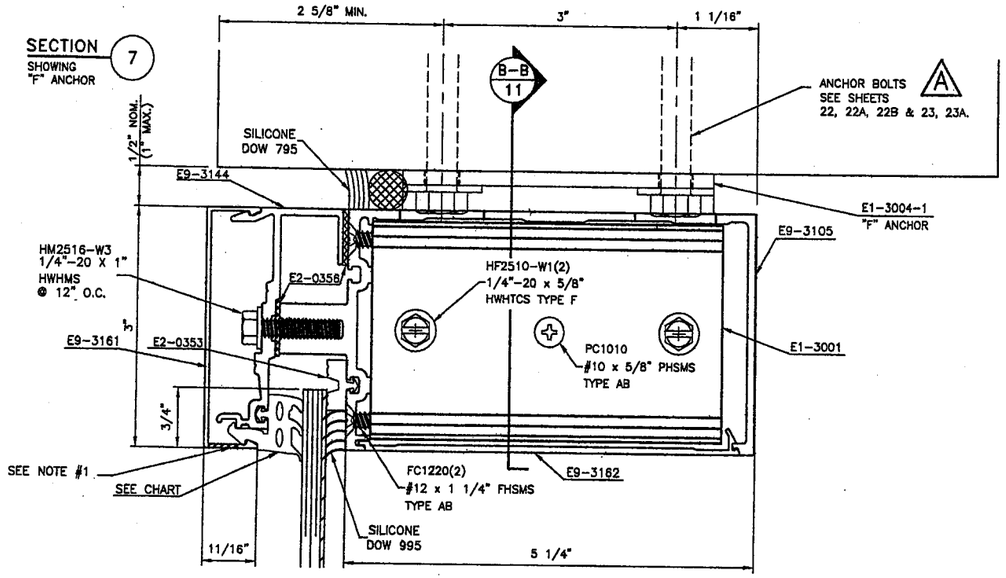

ALTERNATE SECTION 7A
SHOWING "F" ANCHOR

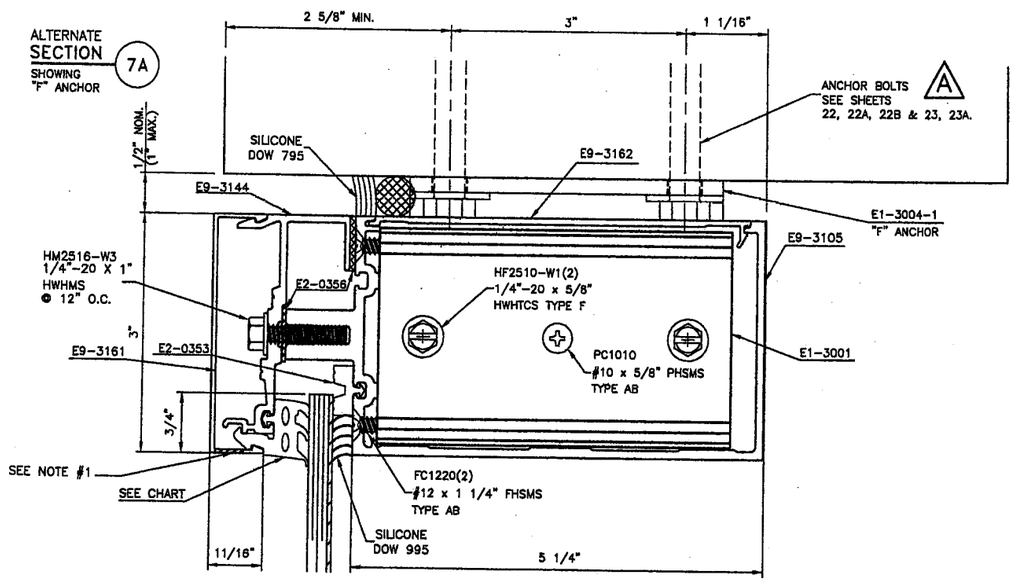

SECTION 8
SHOWING "I" ANCHOR

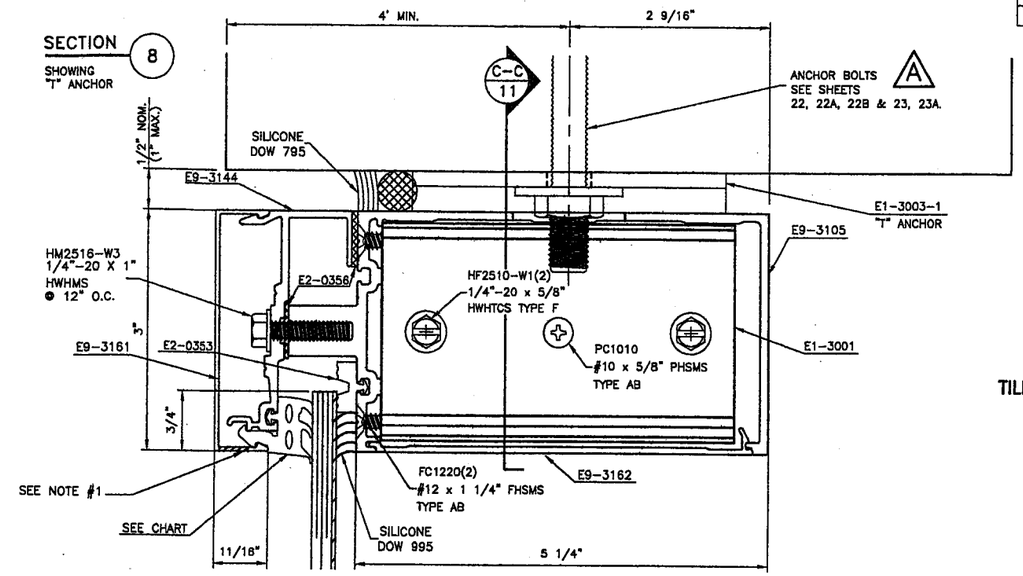

SECTION 8A
SHOWING ANCHOR CLIP

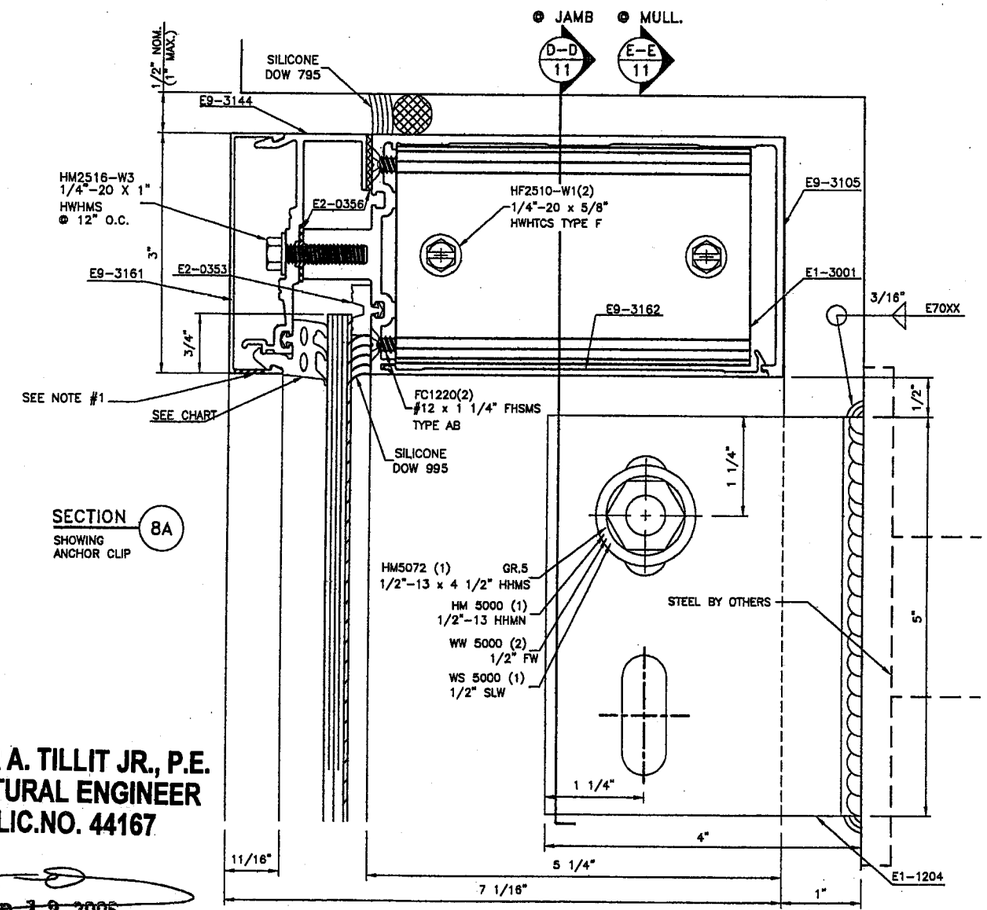

TILLECO INC.

TILLIT TESTING & ENGINEERING COMPANY
6355 NW 36th STREET, STE. 305
MIAMI, FLORIDA 33166
FL E.B. LICENSE No. 0006719

NOTE:
1. 5/16" DIA. WEEPHOLE. (2)/HORIZ. LOCATED @ 1/3 D.L.O. FROM ENDS.
2. EXTERIOR GASKET CHART

GL. NOMINAL THICKNESS	USE GASKET
5/16"	E2-0360
7/16"	E2-0352
9/16"	E2-0351

PRODUCT REVISED
as complying with the Florida Building Code
Acceptance No 08-1224.15
Expiration Date 03/04/2011
By Miami Dade Product Control Division

~~PRODUCT REVISED~~
~~as complying with the Florida Building Code~~
~~Acceptance No 06-0306.02~~
~~Expiration Date 03/04/11~~
~~By~~
~~Miami Dade Product Control Division~~

WALTER A. TILLIT JR., P.E.
STRUCTURAL ENGINEER
FL. LIC.NO. 44167

APR 12 2006

RESERVED FOR METRO-DADE USE ONLY

YKK AP America
YKK AP AMERICA, INC.
5630 GWALTNEY DRIVE
ATLANTA, GEORGIA 30336

SYSTEM	SCALE
YHC 300 SINGLE GLAZING SYSTEM	1/2
DESCRIPTION: HEAD DETAILS	
DRAWING NUMBER: YHC-300-OG-SL	REV. A

APPROVED BY	DRAWN BY	DATE	SHEET NO.
JIA	RTB	8/5/02	6 OF 26

G:\SYSDWGS\YHC3000G\DADE\SINGLE\LARGEMISSILE\YHC300n06.DWG

REV.	DESCRIPTION	BY	DATE
A	SECTION 9 , 9A, 10 & 10A	L.G.	2/28/06
B	EDGE DISTANCE REQ'D.	C.V.	4/24/06

WALTER A. TILLIT JR., P.E.
STRUCTURAL ENGINEER
FL. LIC.NO. 44167

APR 12 2006

TILLECO INC.

TILLIT TESTING & ENGINEERING COMPANY
6355 NW 36th STREET, STE. 305
MIAMI, FLORIDA 33166
FL E.B. LICENSE No. 0006719

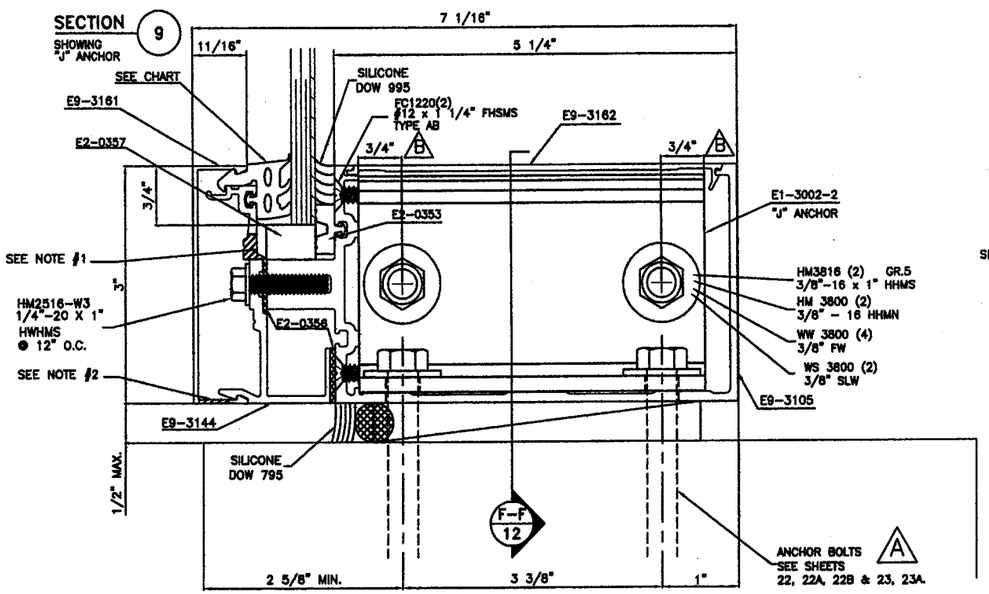

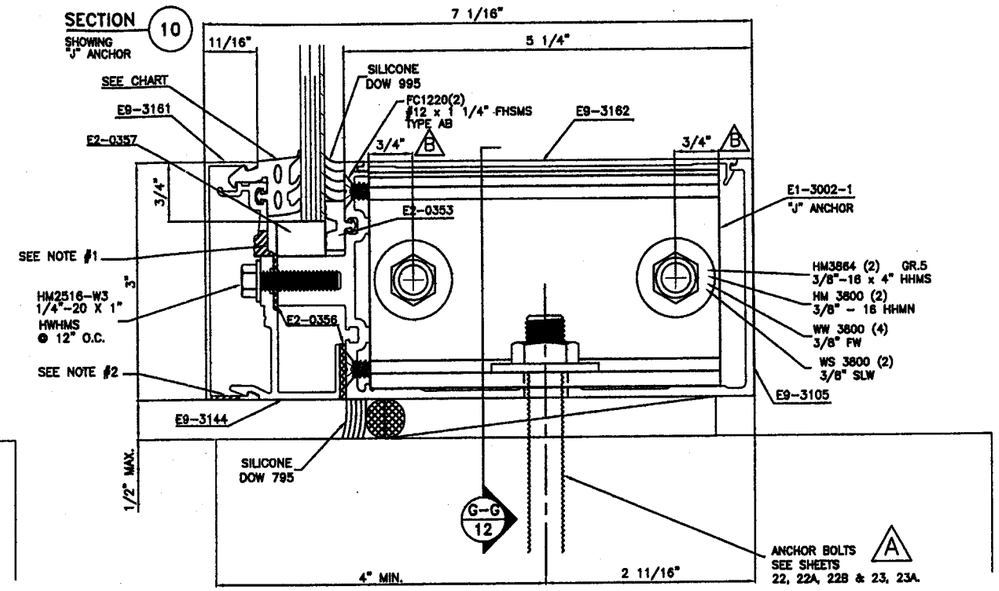

NOTE:
1. 5/16" DIA. WEEPHOLE. (3)/HORIZ. LOCATED (1) @ 3" FROM EACH END & (1) @ MID-SPAN.
2. 5/16" DIA. WEEPHOLE. (2)/HORIZ. LOCATED @ 1/3 D.L.O. FROM ENDS.
3. EXTERIOR GASKET CHART

GL. NOMINAL THICKNESS	USE GASKET
5/16"	E2-0360
7/16"	E2-0352
9/16"	E2-0351

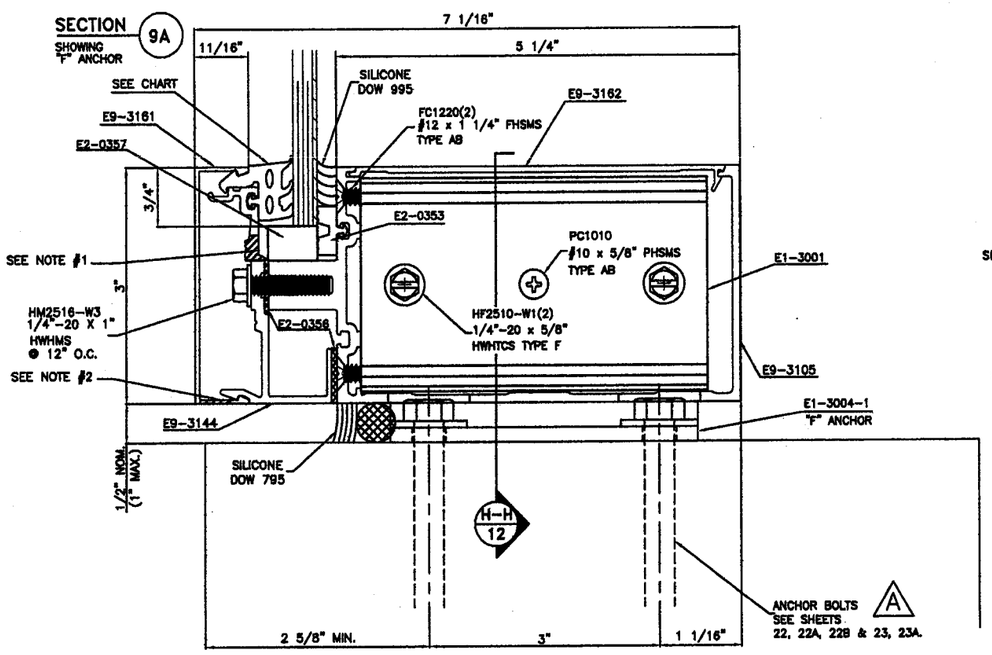

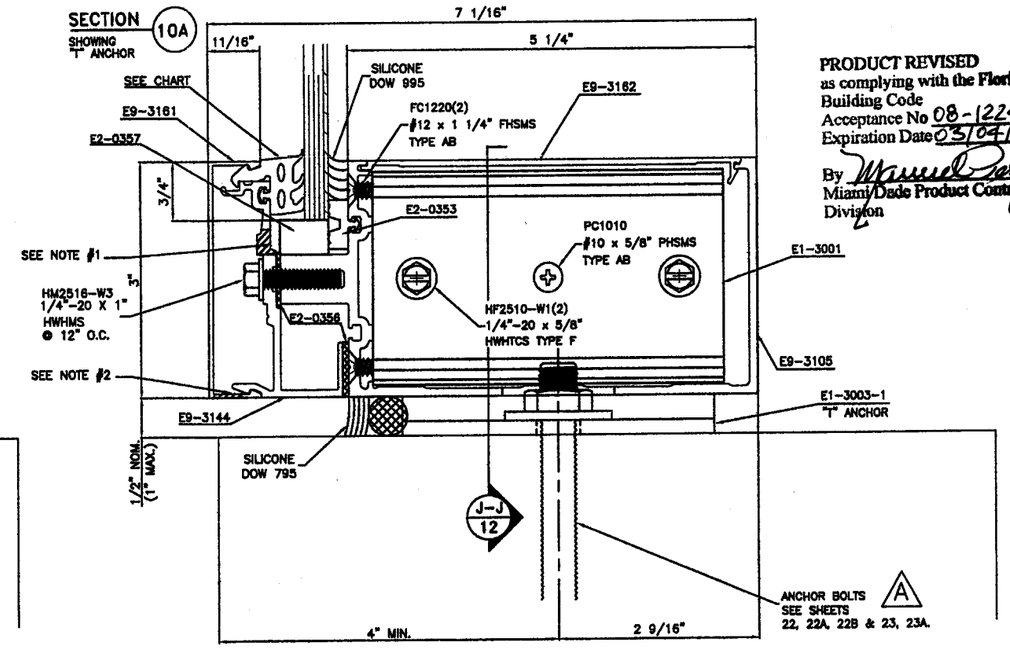

PRODUCT REVISED
as complying with the **Florida** Building Code
Acceptance No 08-1224.15
Expiration Date 03/04/2011
By Miami-Dade Product Control Division

PRODUCT REVISED
as complying with the Florida Building Code
Acceptance No 06-0306.02
Expiration Date 03/04/11
By Miami-Dade Product Control Division

RESERVED FOR METRO-DADE USE ONLY

YKK AP AMERICA, INC.
5630 GWALTNEY DRIVE
ATLANTA, GEORGIA 30336

SYSTEM	SCALE
YHC 300 SINGLE GLAZING SYSTEM	1/2

DESCRIPTION: SILL DETAILS

DRAWING NUMBER	REV.
YHC-300-OG-SL	A

APPROVED BY	DRAWN BY	DATE	SHEET NO.
JIA	RTB	8/5/02	7 OF 26

G:\SYSDWGS\YHC300OG\DADE\SINGLE\LARGEMISSILE\YHC300p07.DWG

REV.	DESCRIPTION	BY	DATE
A	SECTION 11 & 12	JIA	2/8/06
B	DOORS/STOREFRONTS DASHED LINES	L.G.	4/7/06

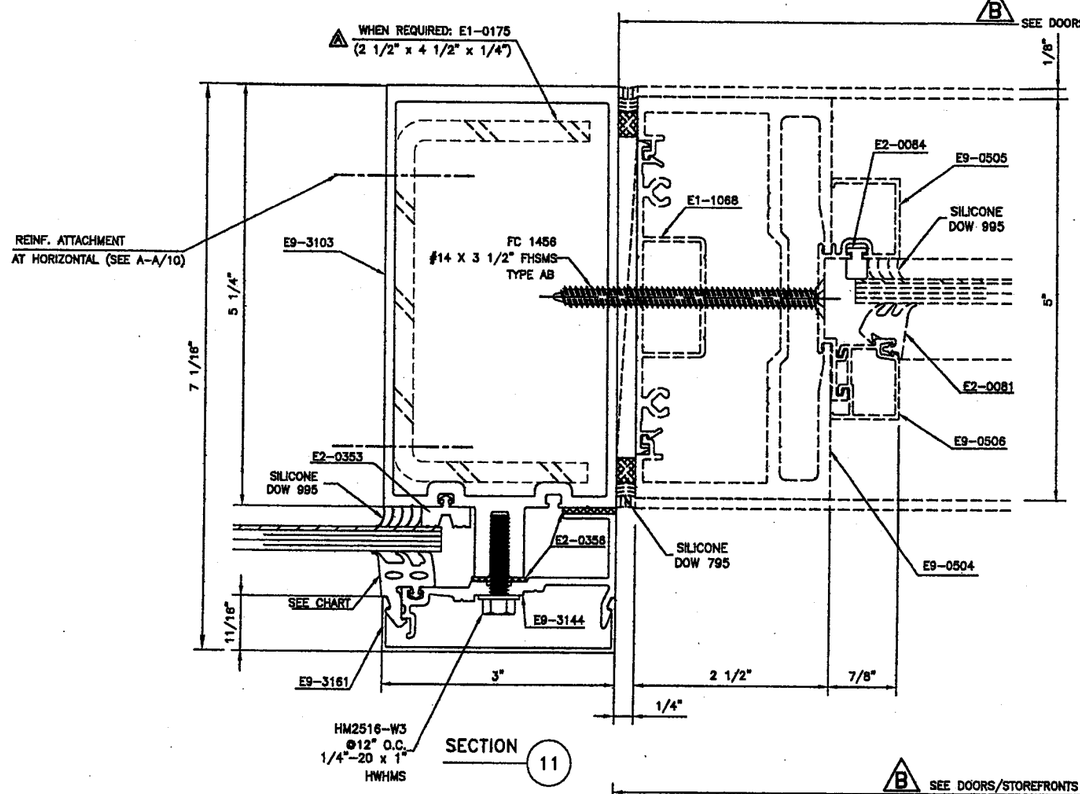

SECTION 11

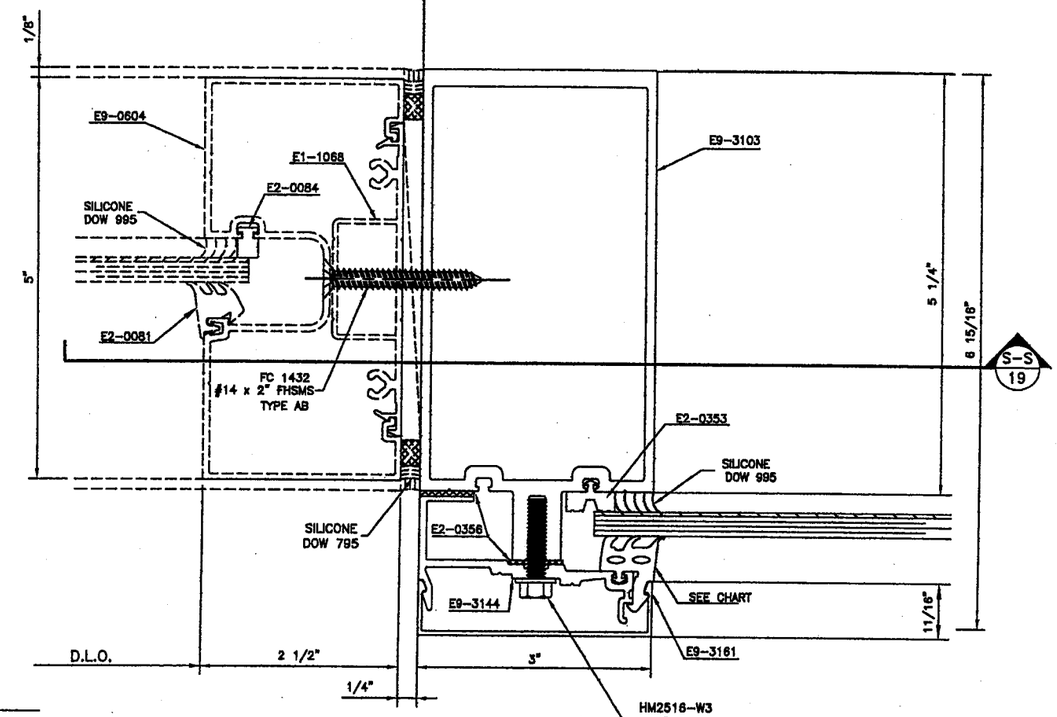

SECTION 13

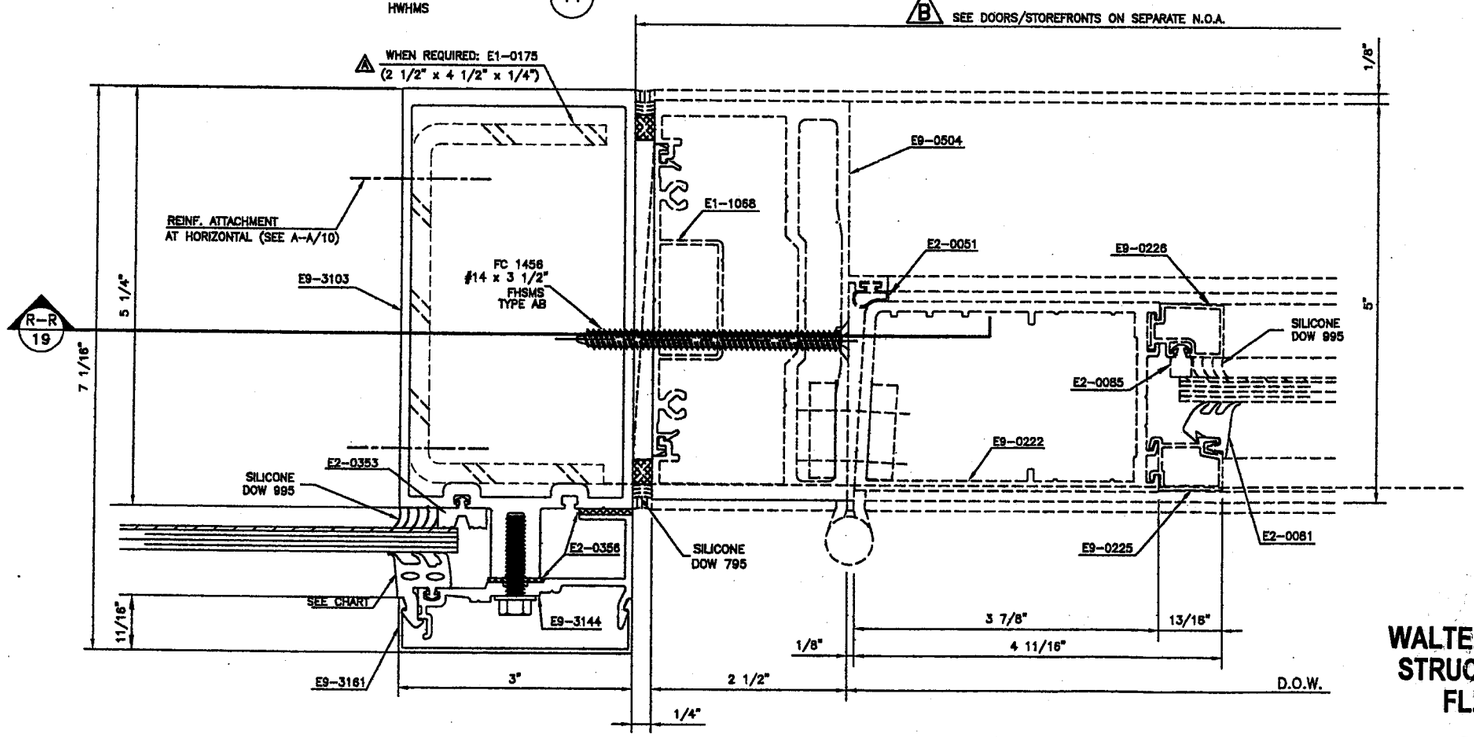

SECTION 12

TILLECO INC.

TILLIT TESTING & ENGINEERING COMPANY
6355 NW 36th STREET, STE. 305
MIAMI, FLORIDA 33166
FL E.B. LICENSE No. 0006719

PRODUCT REVISED
as complying with the Florida Building Code
Acceptance No 08-1224.15
Expiration Date 03/04/2011
By Manuel Perez
Miami-Dade Product Control Division

SEE DETAIL OF DOOR AND STOREFRONT IN THE CORRESPONDING NOTICE OF ACCEPTANCE

NOTES:
1. EXTERIOR GASKET CHART

GL. NOMINAL THICKNESS	USE GASKET
5/16"	E2-0360
7/16"	E2-0352
9/16"	E2-0351

WALTER A. TILLIT JR., P.E.
STRUCTURAL ENGINEER
FL. LIC.NO. 44167

APR 12 2006

PRODUCT REVISED
as complying with the Florida Building Code
Acceptance No 06-0306.02
Expiration Date 03/04/11
By
Miami-Dade Product Control Division

RESERVED FOR METRO-DADE USE ONLY

YKK AP America
YKK AP AMERICA, INC.
5630 GWALTNEY DRIVE
ATLANTA, GEORGIA 30336

SYSTEM	SCALE
YHC 300 SINGLE GLAZING SYSTEM	1/2

DESCRIPTION: STOREFRONT AND DOOR DETAILS

DRAWING NUMBER	REV.
YHC-300-OG-SL	A

APPROVED BY	DRAWN BY	DATE	SHEET NO.
JIA	RTB	8/5/02	8 OF 26

G:\SYSDWGS\YHC300OG\DADE\SINGLE\LARGEMISSILE\YHC300DO8.DWG

REV.	DESCRIPTION	BY	DATE
A	SECTIONS 15 & 16	L.G.	2/28/06
B	DOORS/STOREFRONTS DASHED LINES	L.G.	4/7/06

NOTE:
1. 5/16" DIA. WEEPHOLE. (3)/HORIZ. LOCATED (1) @ 3" FROM EACH END & (1) @ MID-SPAN.
2. 5/16" DIA. WEEPHOLE. (2)/HORIZ. LOCATED @ 1/3 D.L.O. FROM ENDS.
3. EXTERIOR GASKET CHART

GL. NOMINAL THICKNESS	USE GASKET
5/16"	E2-0360
7/16"	E2-0352
9/16"	E2-0351

PRODUCT REVISED
as complying with the Florida Building Code
Acceptance No 08-1224.15
Expiration Date 03/04/2011
By Marcia Perez
Miami Dade Product Control Division

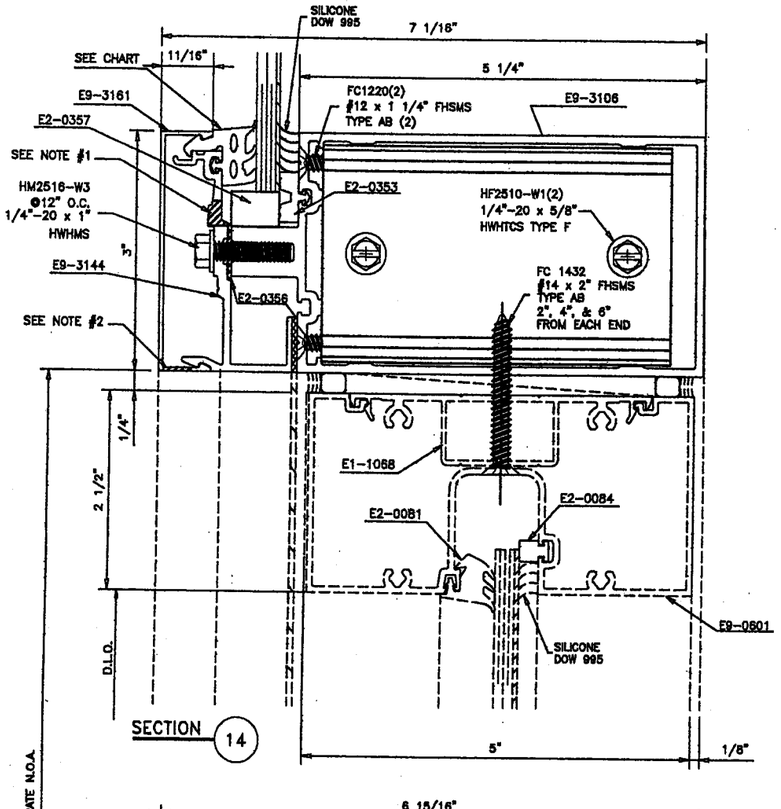

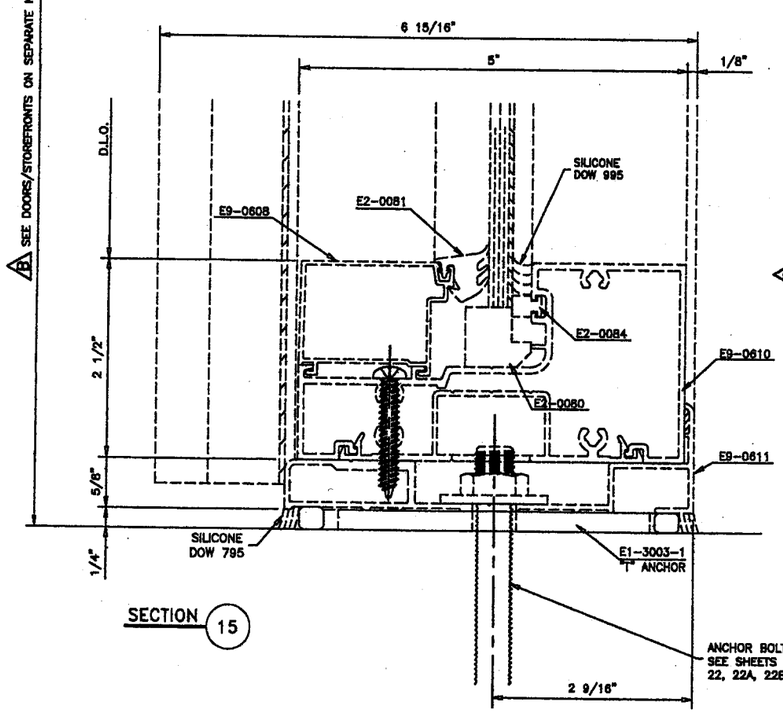

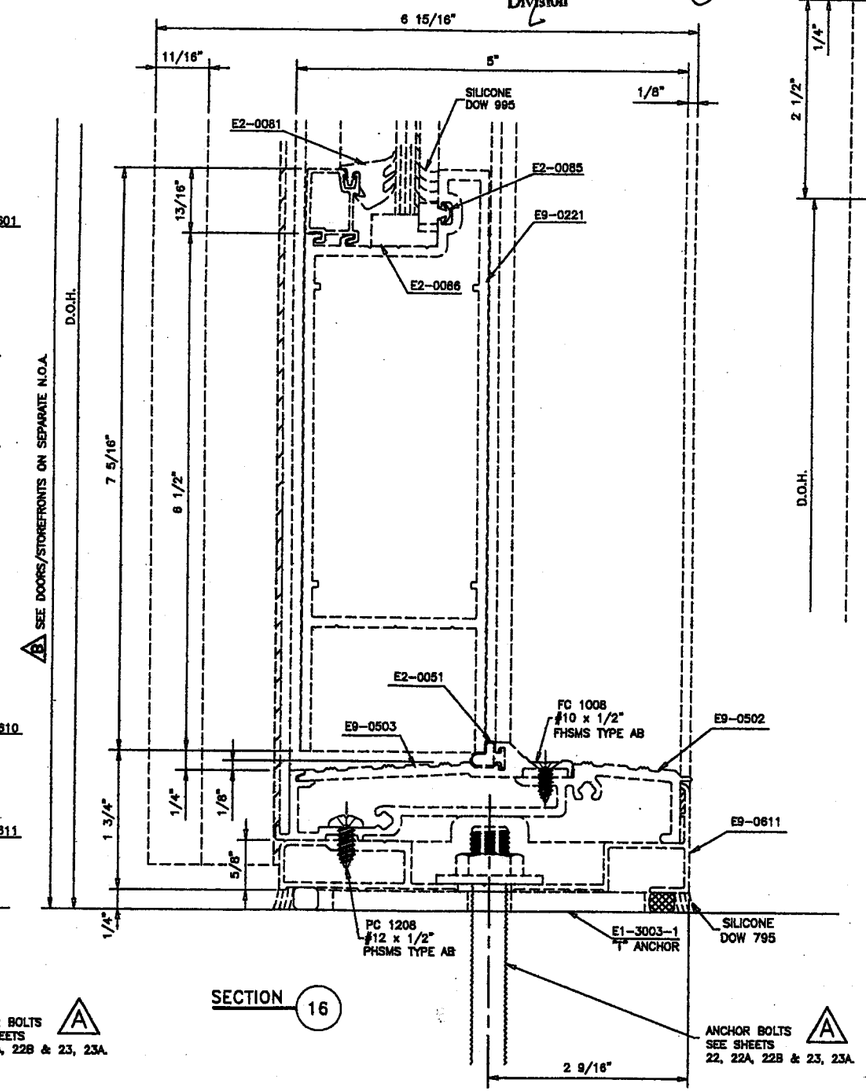

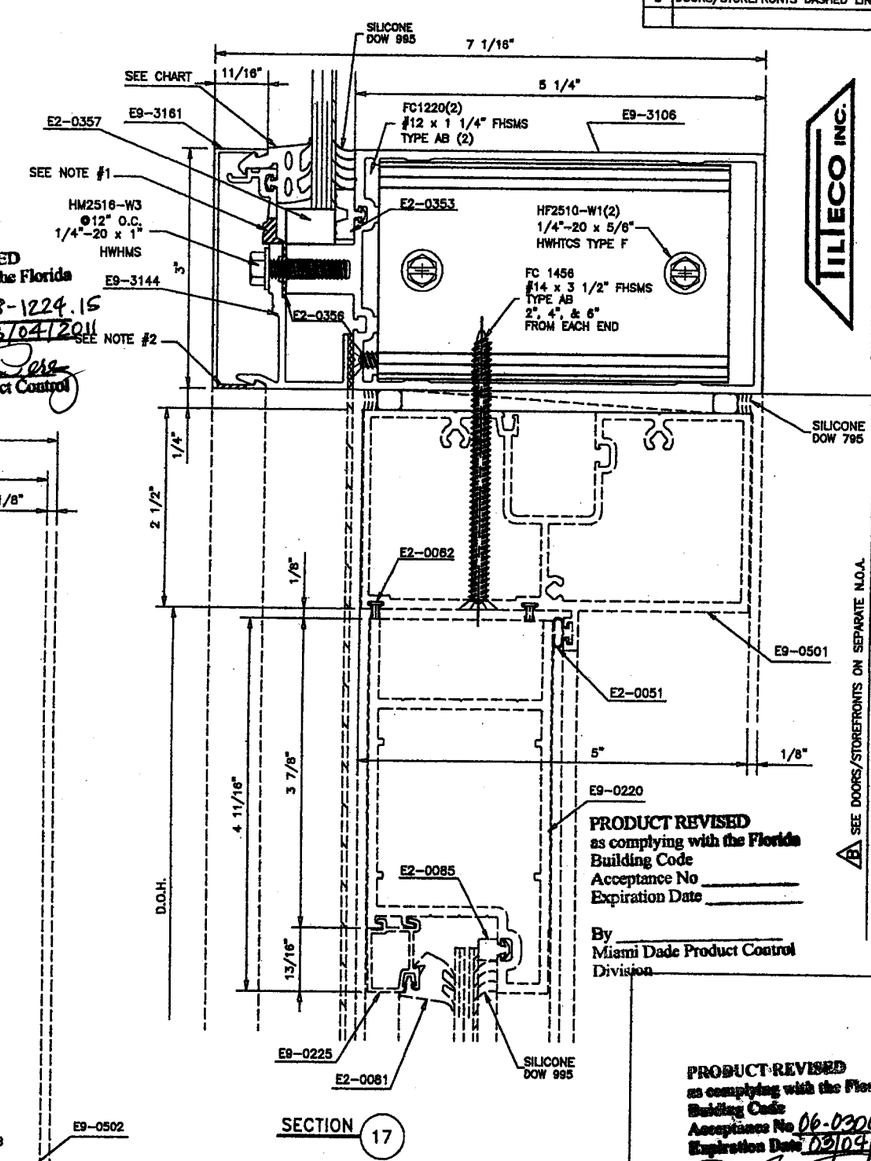

SEE DETAIL OF DOOR AND STOREFRONT IN THE CORRESPONDING NOTICE OF ACCEPTANCE

WALTER A. TILLIT JR., P.E.
STRUCTURAL ENGINEER
FL. LIC.NO. 44167

APR 12 2006

TILLECO INC.
TILLIT TESTING & ENGINEERING COMPANY
6355 NW 36th STREET, STE. 305
MIAMI, FLORIDA 33166
FL E.B. LICENSE No. 0006719

PRODUCT REVISED
as complying with the Florida Building Code
Acceptance No 06-0306.02
Expiration Date 03/04/11
By
Miami Dade Product Control Division

RESERVED FOR METRO-DADE USE ONLY

YKK AP AMERICA, INC.
5630 GWALTNEY DRIVE
ATLANTA, GEORGIA 30336

SYSTEM	SCALE
YHC 300 SINGLE GLAZING SYSTEM	1/2

DESCRIPTION: STOREFRONT AND DOOR DETAILS

DRAWING NUMBER	REV.
YHC-300-OG-SL	A

APPROVED BY	DRAWN BY	DATE	SHEET NO.
JIA	RTB	8/5/02	9 OF 26

G:\SYSDWGS\YHC300OG\DADE\SINGLE\LARGEMISSILE\YHC300o09.DWG

REV.	DESCRIPTION	BY	DATE
A	SECTION A-A	JIA	2/6/06

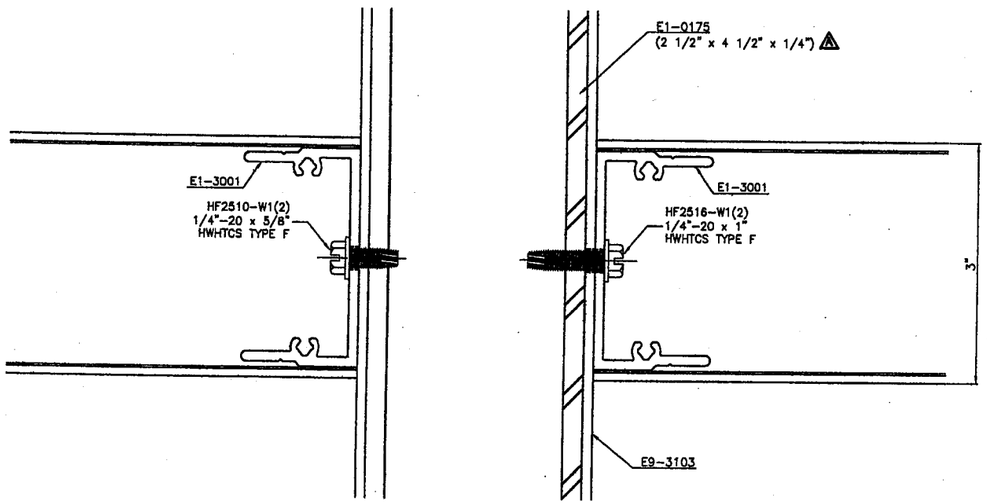

SECTION (A-A)

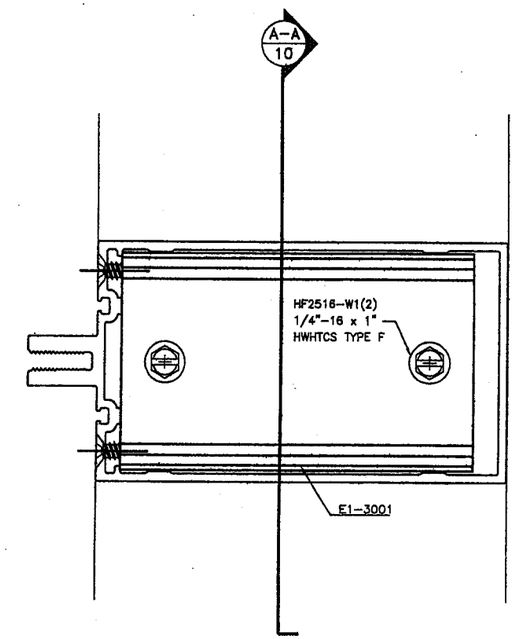

SECTION
CONNECTION "HORIZ.-VERT. W/REINF."

TILTECO INC.

TILLIT TESTING & ENGINEERING COMPANY
6355 NW 36th STREET, STE. 305
MIAMI, FLORIDA 33166
FL E.B. LICENSE No. 0006719

WALTER A. TILLIT JR., P.E.
STRUCTURAL ENGINEER
FL. LIC.NO. 44167

APR 12 2006

PRODUCT REVISED
as complying with the Florida
Building Code
Acceptance No 08-1224.15
Expiration Date 03/04/2011
By Manuel Perez
Miami Dade Product Control
Division

PRODUCT REVISED
as complying with the Florida
Building Code
Acceptance No 06-0306.02
Expiration Date 03/04/11
By
Miami Dade Product Control
Division

RESERVED FOR METRO-DADE USE ONLY

YKK AP America

YKK AP AMERICA, INC.
5630 GWALTNEY DRIVE
ATLANTA, GEORGIA 30336

SYSTEM	SCALE
YHC 300 SINGLE GLAZING SYSTEM	1/2

DESCRIPTION: INTERMEDIATE DETAILS

DRAWING NUMBER	REV.
YHC-300-OG-SL	A

APPROVED BY	DRAWN BY	DATE	SHEET NO.
JIA	RTB	8/5/02	10 OF 26

G:\SYSDWGS\YHC3000G\DADE\SINGLE\LARGEMISSILE\YHC300-10.DWG

REV.	DESCRIPTION	BY	DATE
A	SECTIONS B, C & E	L.G.	2/28/06

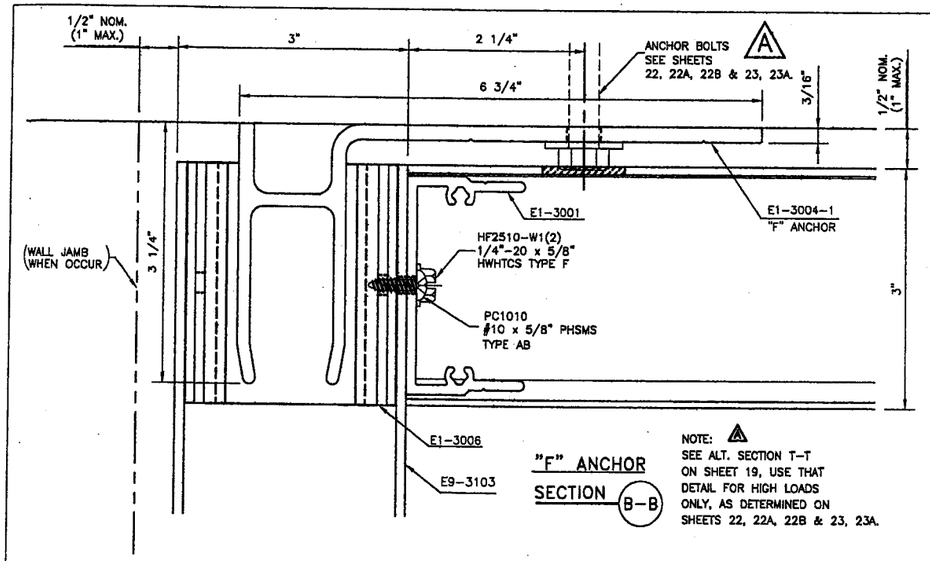

"F" ANCHOR SECTION B-B

NOTE: A SEE ALT. SECTION T-T ON SHEET 19, USE THAT DETAIL FOR HIGH LOADS ONLY, AS DETERMINED ON SHEETS 22, 22A, 22B & 23, 23A.

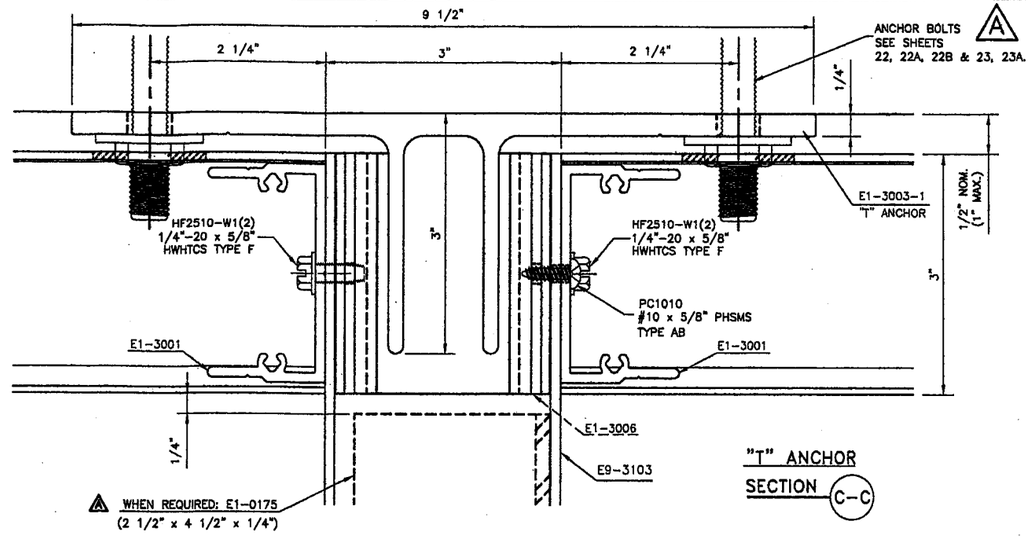

"T" ANCHOR SECTION C-C

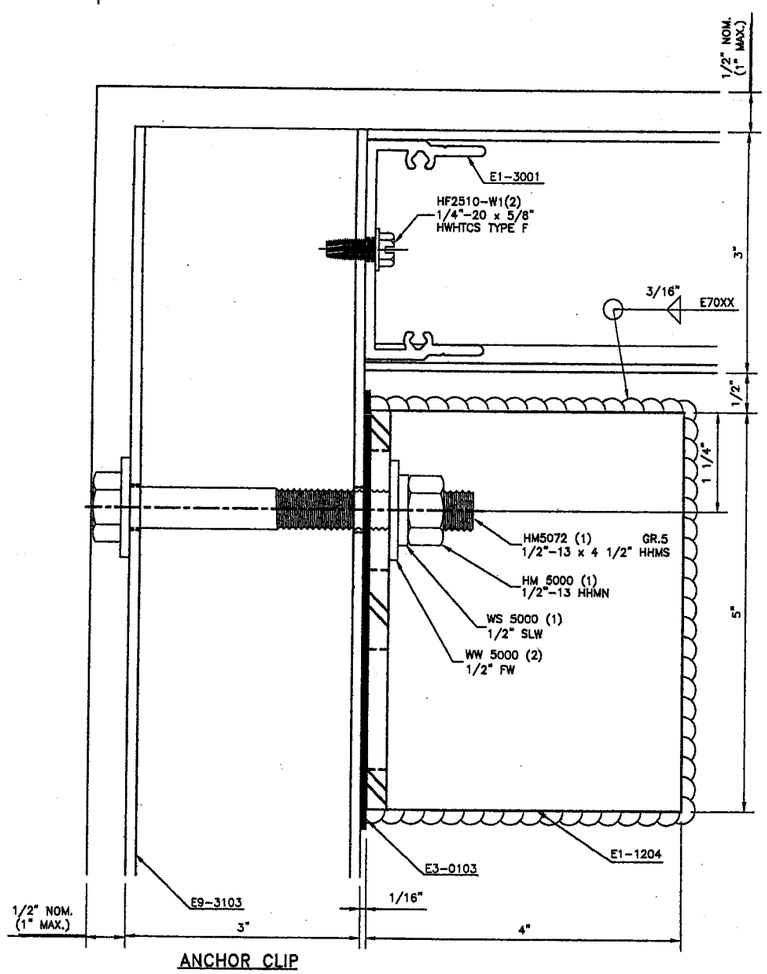

ANCHOR CLIP SECTION @ JAMB D-D

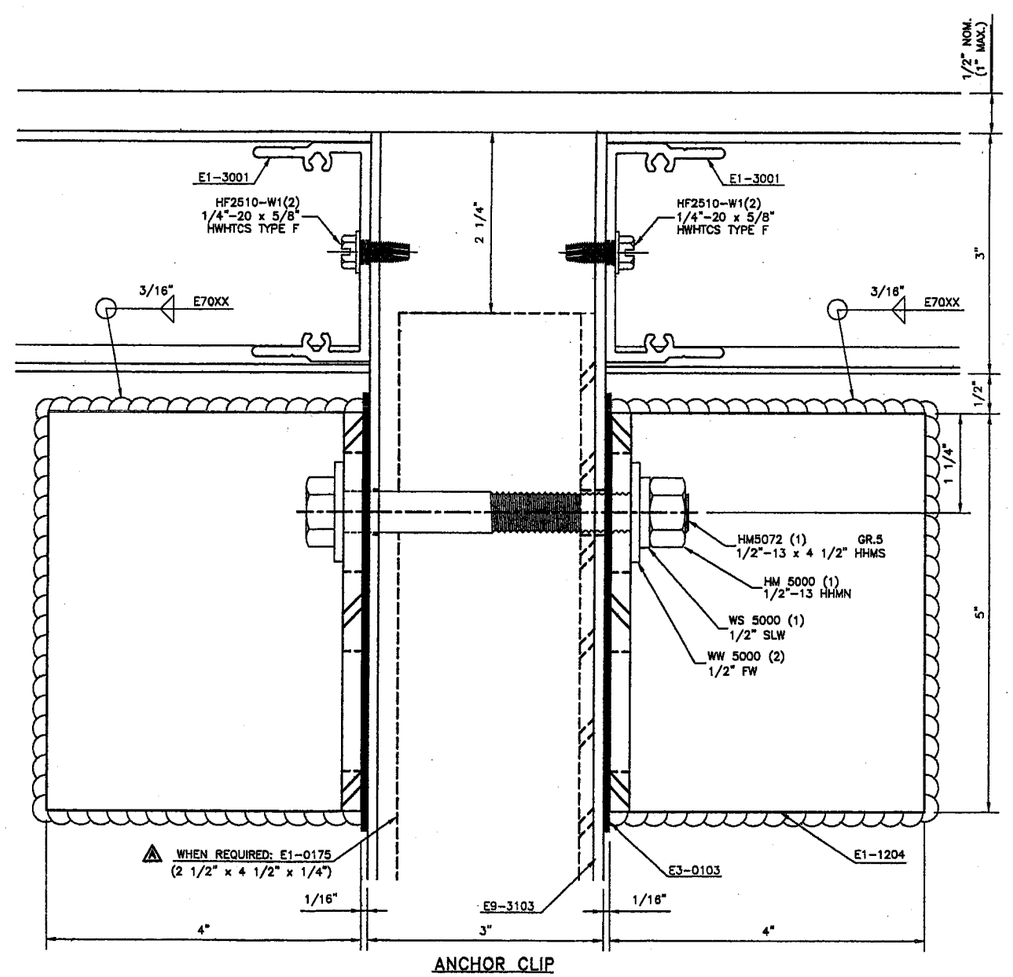

ANCHOR CLIP SECTION @ MULL. E-E

PRODUCT REVISED
as complying with the Florida Building Code
Acceptance No 08-1224.15
Expiration Date 03/04/2011
By Miami-Dade Product Control Division

TILTECO INC.

TILLIT TESTING & ENGINEERING COMPANY
6355 NW 36th STREET, STE. 305
MIAMI, FLORIDA 33166
FL E.B. LICENSE No. 0006719

WALTER A. TILLIT JR., P.E.
STRUCTURAL ENGINEER
FL. LIC.NO. 44167

APR 1 2 2008

PRODUCT REVISED
as complying with the Florida Building Code
Acceptance No 06-0306.02
Expiration Date 03/04/11
By Miami-Dade Product Control Division

RESERVED FOR METRO-DADE USE ONLY

YKK AP America

YKK AP AMERICA, INC.
5630 GWALTNEY DRIVE
ATLANTA, GEORGIA 30336

SYSTEM	SCALE
YHC 300 SINGLE GLAZING SYSTEM	1/2

DESCRIPTION: HEAD ANCHOR DETAILS

DRAWING NUMBER	REV.
YHC-300-OG-SL	A

APPROVED BY	DRAWN BY	DATE	SHEET NO.
JIA	RTB	8/5/02	11 OF 26

G:\SYSDWGS\YHC3000G\DADE\SINGLE\LARGEMISSILE\YHC300g11.DWG

REV.	DESCRIPTION	BY	DATE
A	SECTIONS F, G, H & J	L.G.	2/28/06

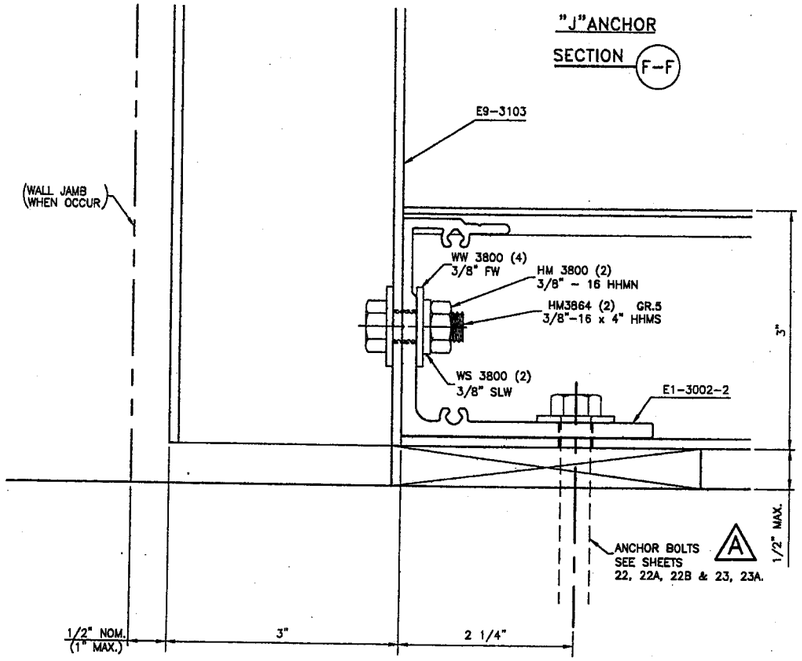

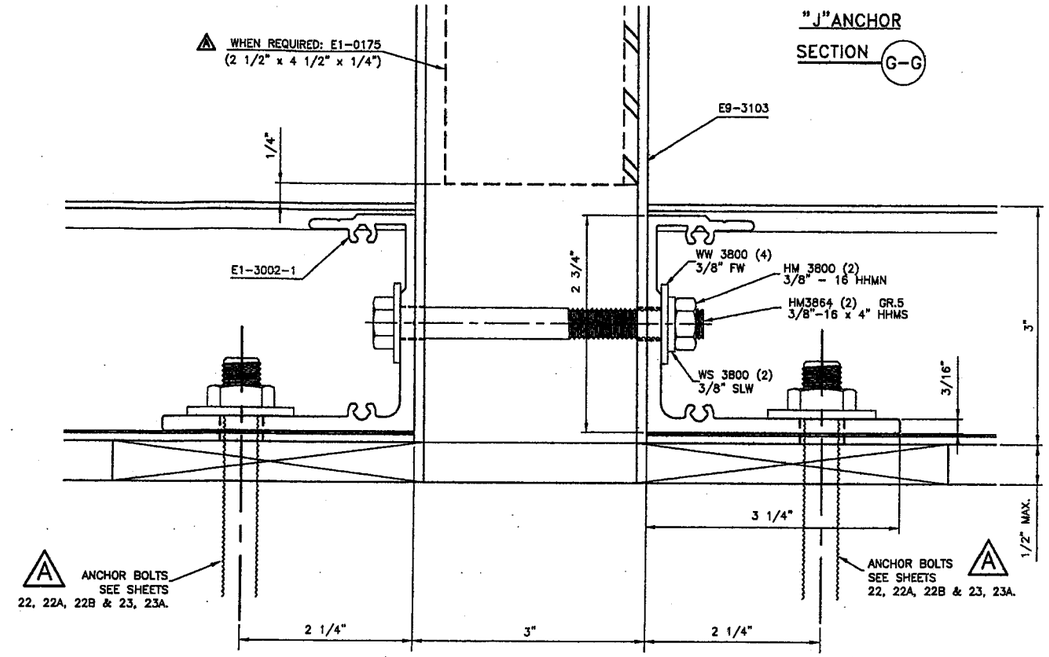

NOTE:
SEE ALT. SECTION U-U ON SHEET 19, USE THAT DETAIL FOR HIGH LOADS ONLY, AS DETERMINED ON SHEETS 22, 22A, 22B & 23, 23A

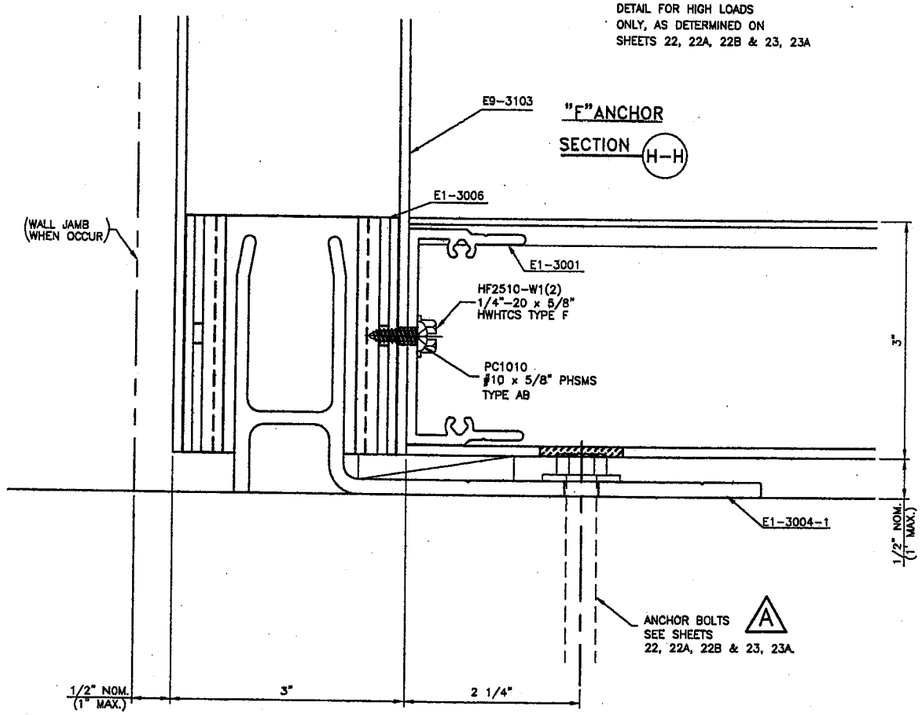

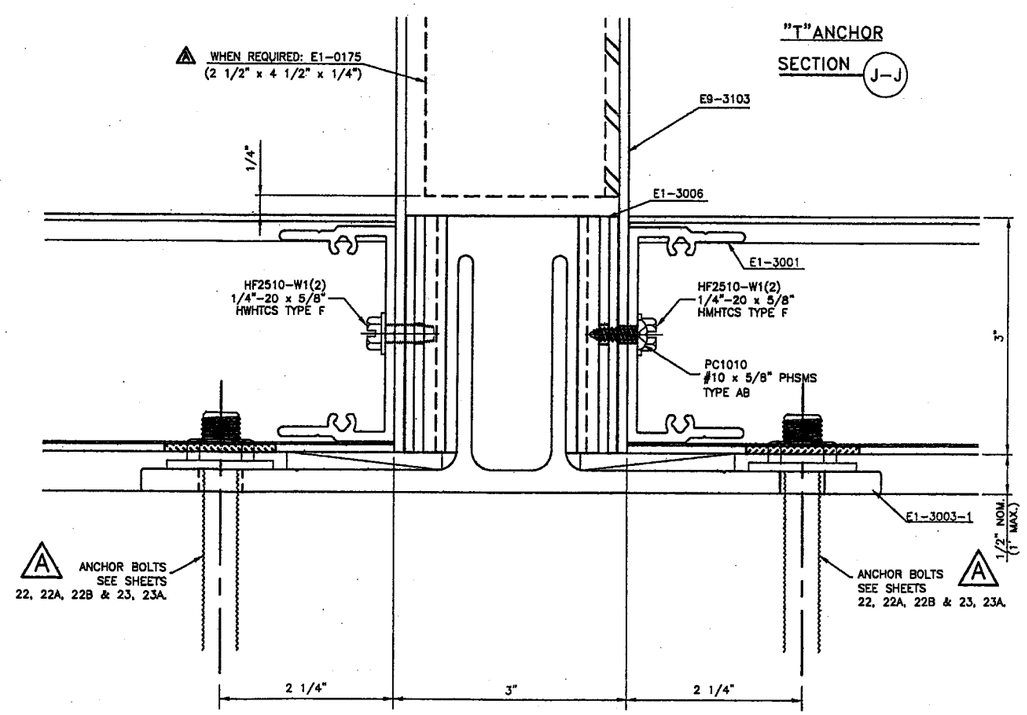

PRODUCT REVISED
as complying with the Florida Building Code
Acceptance No 08-1224.15
Expiration Date 03/04/2011
By Miami Dade Product Control Division

TILTECO INC.

TILLIT TESTING & ENGINEERING COMPANY
6355 NW 36th STREET, STE. 305
MIAMI, FLORIDA 33166
FL E.B. LICENSE No. 0006719

WALTER A. TILLIT JR., P.E.
STRUCTURAL ENGINEER
FL. LIC.NO. 44167

APR 12 2006

PRODUCT REVISED
as complying with the Florida Building Code
Acceptance No 06-0306.02
Expiration Date 03/04/11
By Miami Dade Product Control Division

RESERVED FOR METRO-DADE USE ONLY

YKK AP America
YKK AP AMERICA, INC.
5630 GWALTNEY DRIVE
ATLANTA, GEORGIA 30336

SYSTEM	SCALE
YHC 300 SINGLE GLAZING SYSTEM	1/2

DESCRIPTION: SILL ANCHOR DETAILS

DRAWING NUMBER	REV.
YHC-300-OG-SL	A

APPROVED BY	DRAWN BY	DATE	SHEET NO.
JIA	RTB	8/5/02	12 OF 26

G:\SYSDWGS\YHC3000G\DADE\SINGLE\LARGEMISSILE\YHC300p12.DWG

REV.	DESCRIPTION	BY	DATE
A	NO CHANGE THIS SHEET	JIA	2/8/06
B	MINIMUM SPACING REQ'D.	C.V.	4/24/06

WALTER A. TILLIT JR., P.E.
STRUCTURAL ENGINEER
FL. LIC.NO. 44167

APR 12 2006

TILLECO INC.
TILLIT TESTING & ENGINEERING COMPANY
6355 NW 36th STREET, STE. 305
MIAMI, FLORIDA 33166
FL E.B. LICENSE No. 0006719

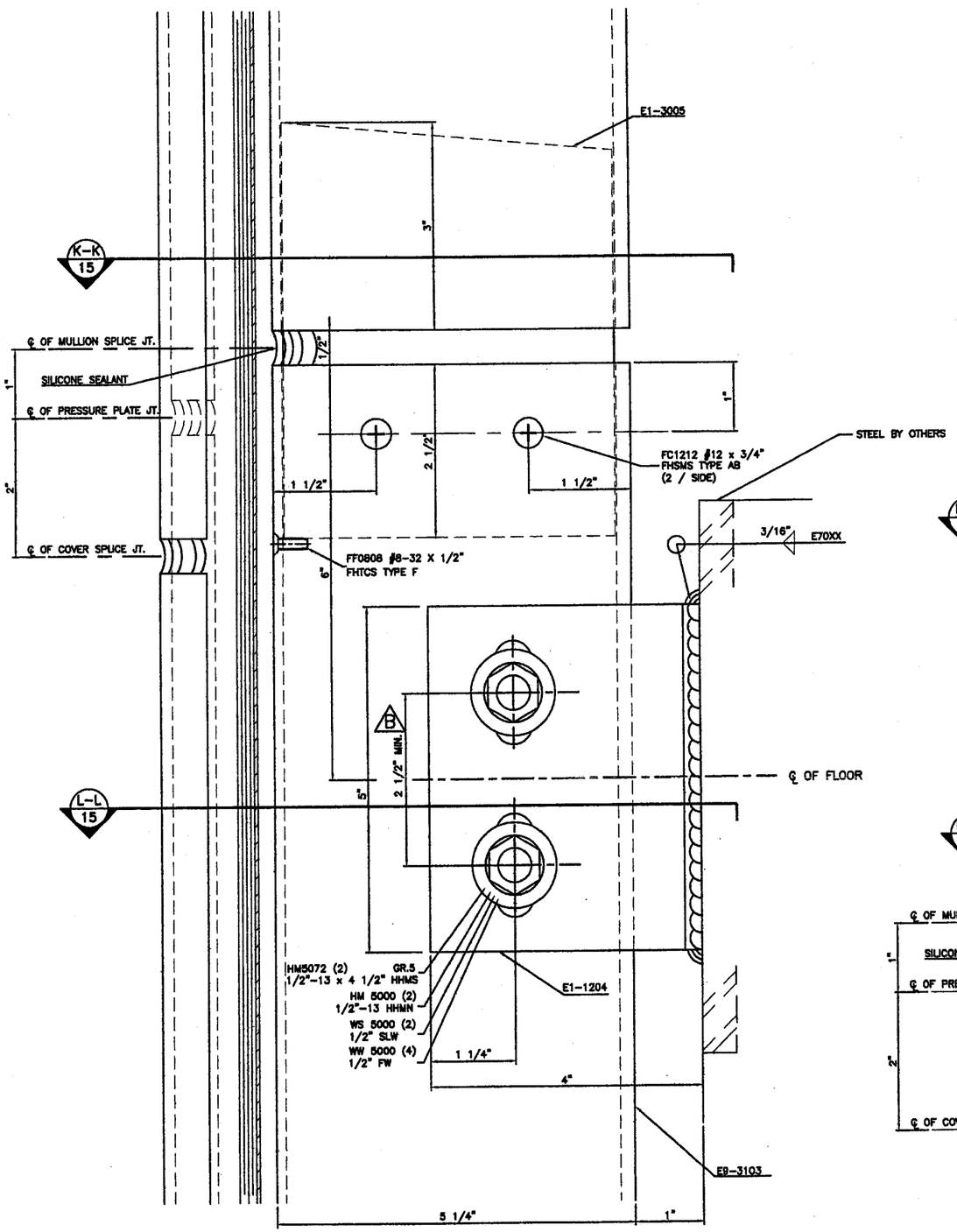

SPLICE & WINDLOAD ANCHOR CLIP

DETAIL 51
JAMB

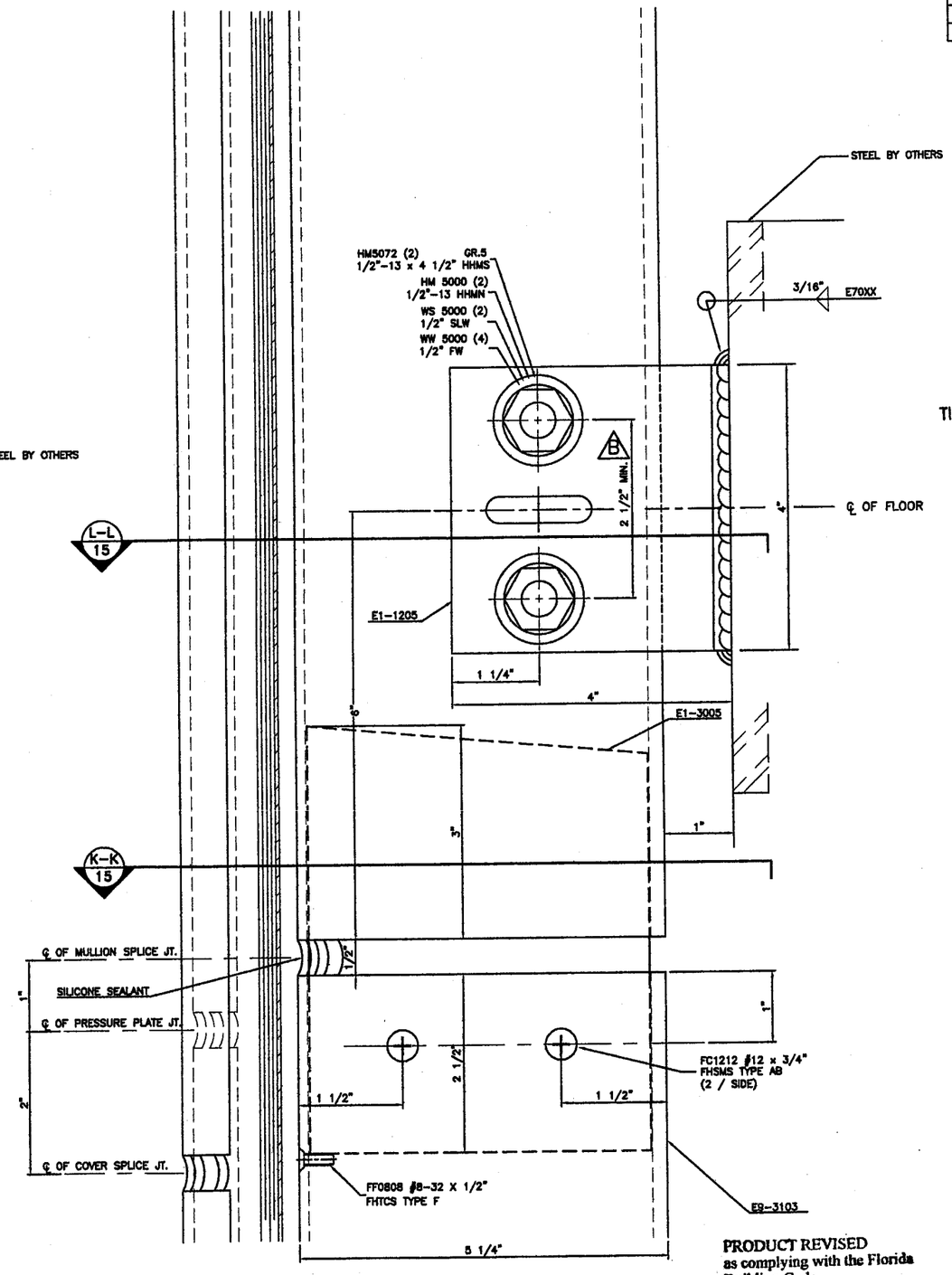

SPLICE & DEADLOAD ANCHOR CLIP

DETAIL 51A
JAMB

PRODUCT REVISED
as complying with the Florida
Building Code
Acceptance No 06-0306.02
Expiration Date 03/04/11
By
Miami Dade Product Control
Division

PRODUCT REVISED
as complying with the Florida
Building Code
Acceptance No 08-1224.15
Expiration Date 03/04/2011
By
Miami Dade Product Control
Division

RESERVED FOR METRO-DADE USE ONLY

YKK AP AMERICA, INC.
5630 GWALTNEY DRIVE
ATLANTA, GEORGIA 30336

SYSTEM	SCALE
YHC 300 SINGLE GLAZING DETAILS	1/2

DESCRIPTION: SPLICE AND ANCHOR CLIP SYSTEM

DRAWING NUMBER	REV.
YHC-300-OG-SL	A

APPROVED BY	DRAWN BY	DATE	SHEET NO.
JIA	RTB	8/5/02	13 OF 26

G:\SYSDWGS\YHC3000G\DADE\SINGLE\LARGEMISSILE\YHC300p13.DWG

REV.	DESCRIPTION	BY	DATE
A	DETAILS 52 & 52A	JIA	2/6/06
B	MINIMUM SPACING REQ'D.	C.V.	4/24/06

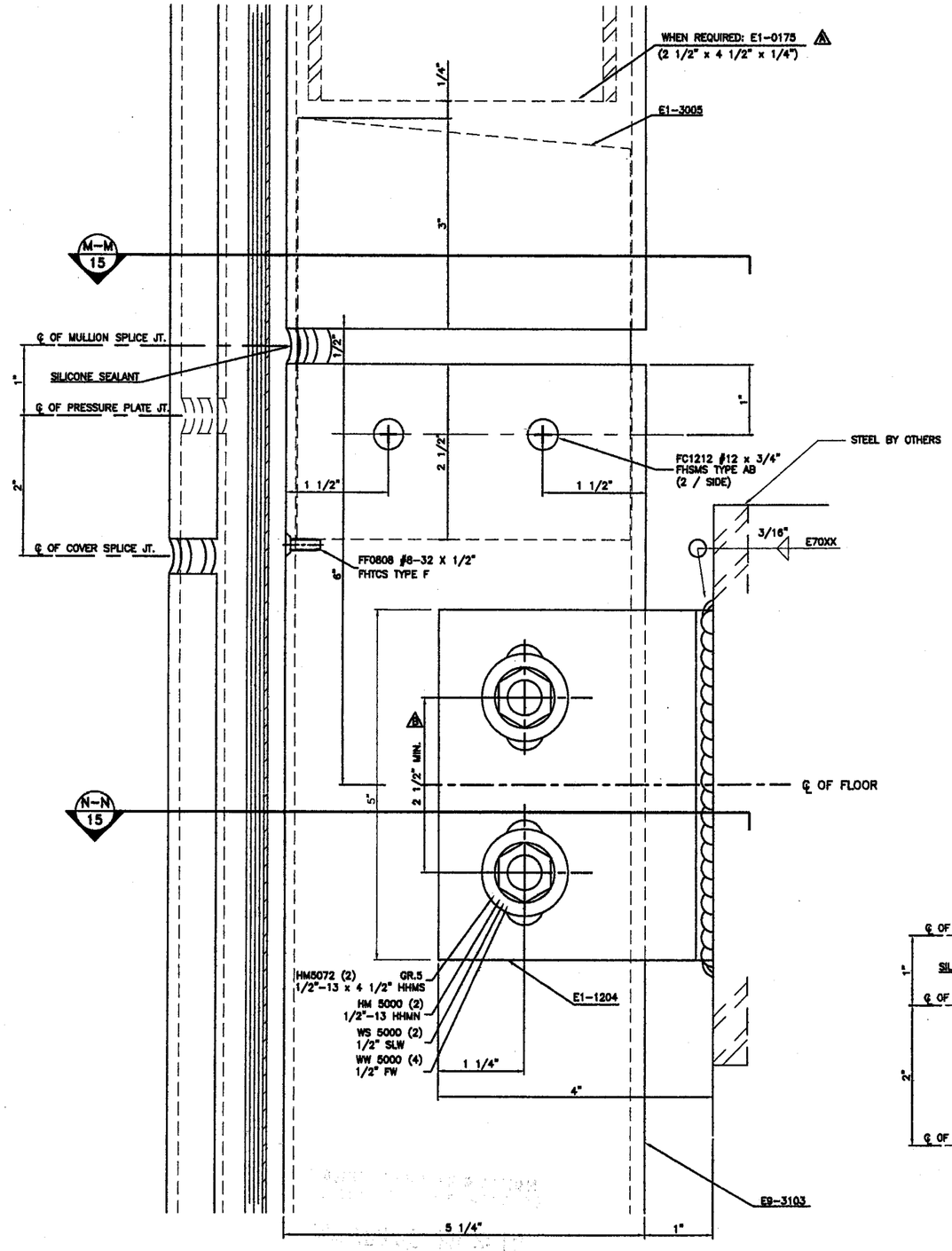

SPLICE & WINDLOAD ANCHOR CLIP

DETAIL 52
MULL.

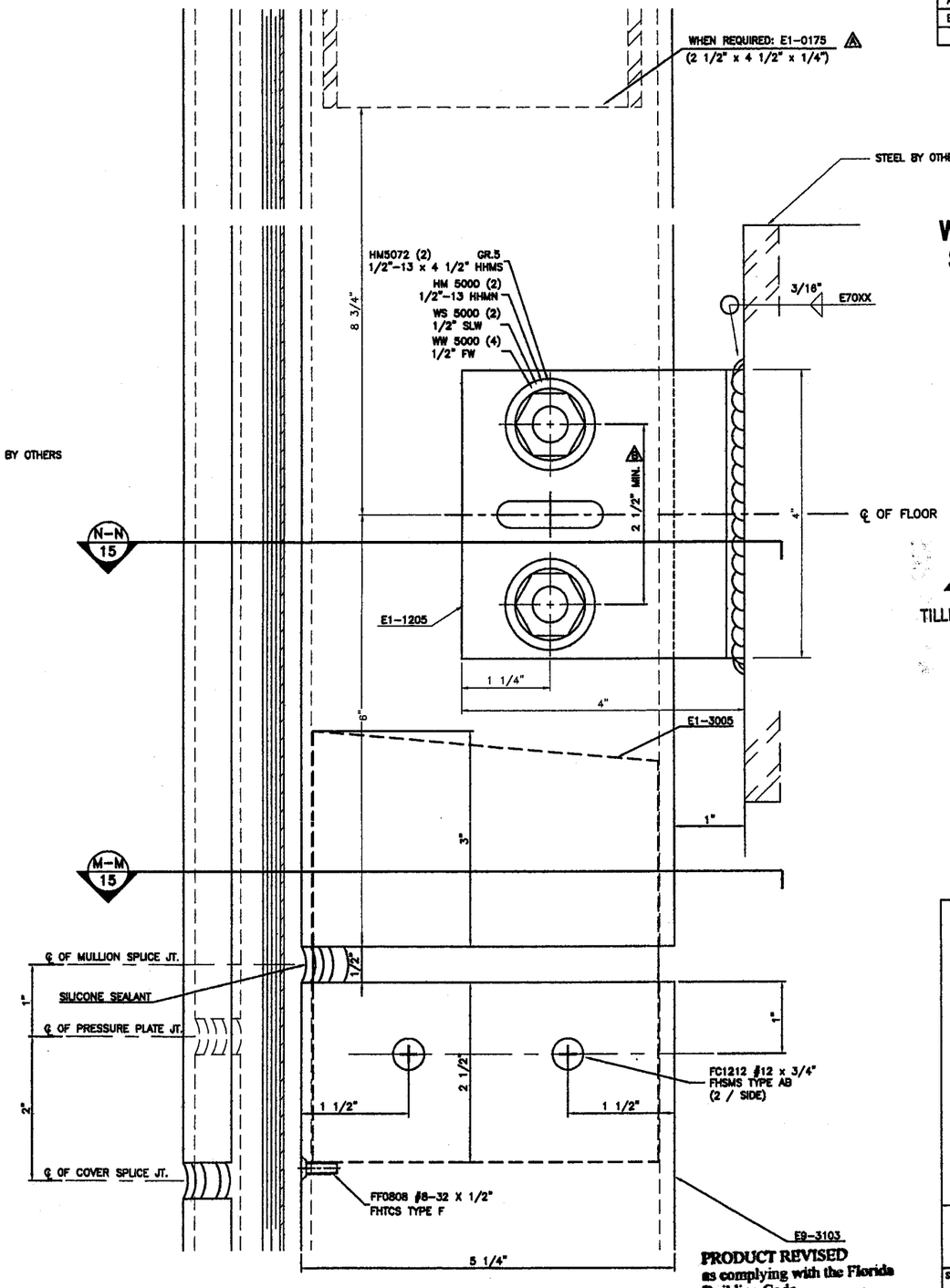

SPLICE & DEADLOAD ANCHOR CLIP

DETAIL 52A
MULL.

PRODUCT REVISED
as complying with the Florida Building Code
Acceptance No 08-1224.15
Expiration Date 03/04/2011
By Manuel Perez
Miami Dade Product Control Division

WALTER A. TILLIT JR., P.E.
STRUCTURAL ENGINEER
FL. LIC.NO. 44167

APR 12 2006

TILLECO INC.

TILLIT TESTING & ENGINEERING COMPANY
6355 NW 36th STREET, STE. 305
MIAMI, FLORIDA 33166
FL E.B. LICENSE No. 0006719

PRODUCT REVISED
as complying with the Florida Building Code
Acceptance No 06-0306.02
Expiration Date 03/04/11
By
Miami Dade Product Control Division

RESERVED FOR METRO-DADE USE ONLY

YKK AP AMERICA, INC.
5630 GWALTNEY DRIVE
ATLANTA, GEORGIA 30336

SYSTEM	SCALE
YHC 300 SINGLE GLAZING SYSTEM	1/2
DESCRIPTION: SPLICE AND ANCHOR CLIP DETAILS	
DRAWING NUMBER: YHC-300-OG-SL	REV. A
APPROVED BY: JIA / DRAWN BY: RTB / DATE: 8/5/02	SHEET NO. 14 OF 26

G:\SYSDWGS\YHC300OG\DADE\SINGLE\LARGEMISSILE\YHC300p14.DWG

REV.	DESCRIPTION	BY	DATE
A	NO CHANGE THIS SHEET	JIA	2/6/06

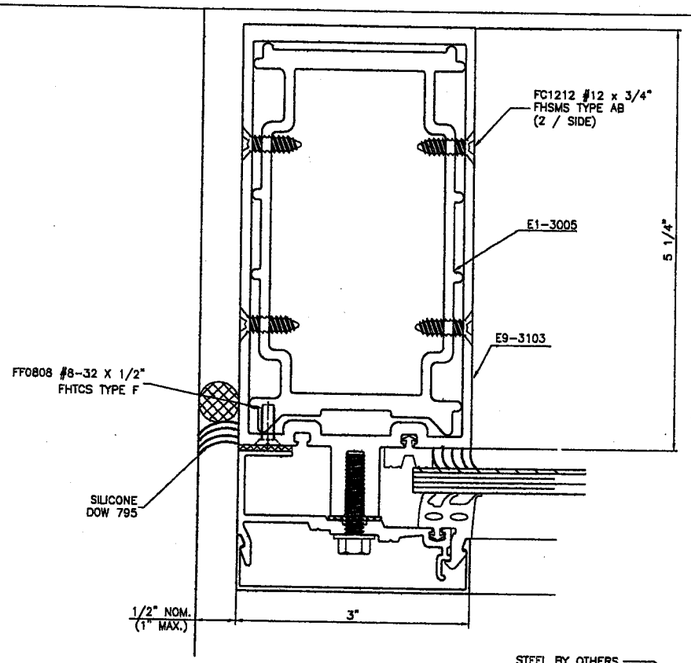

SECTION K-K
@ JAMB

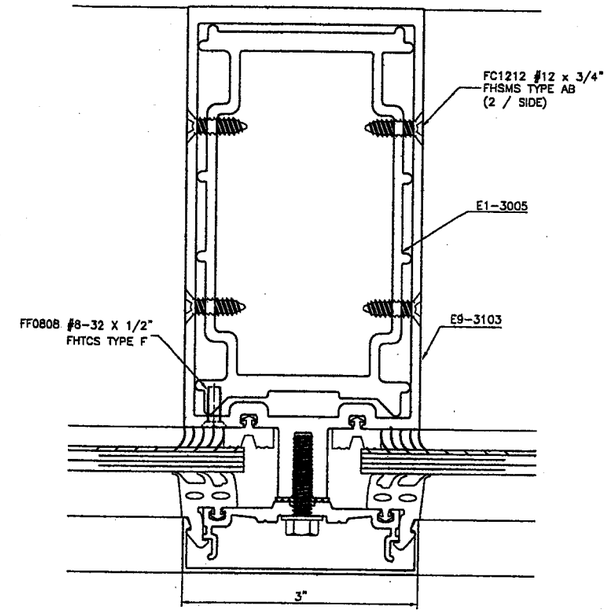

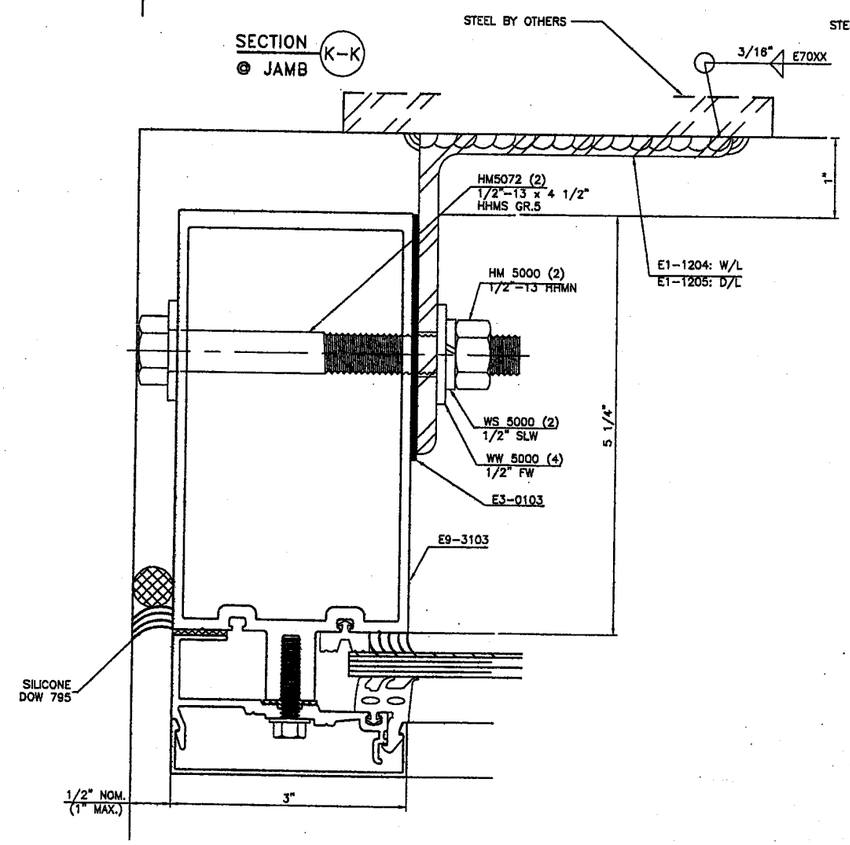

SECTION L-L
@ JAMB

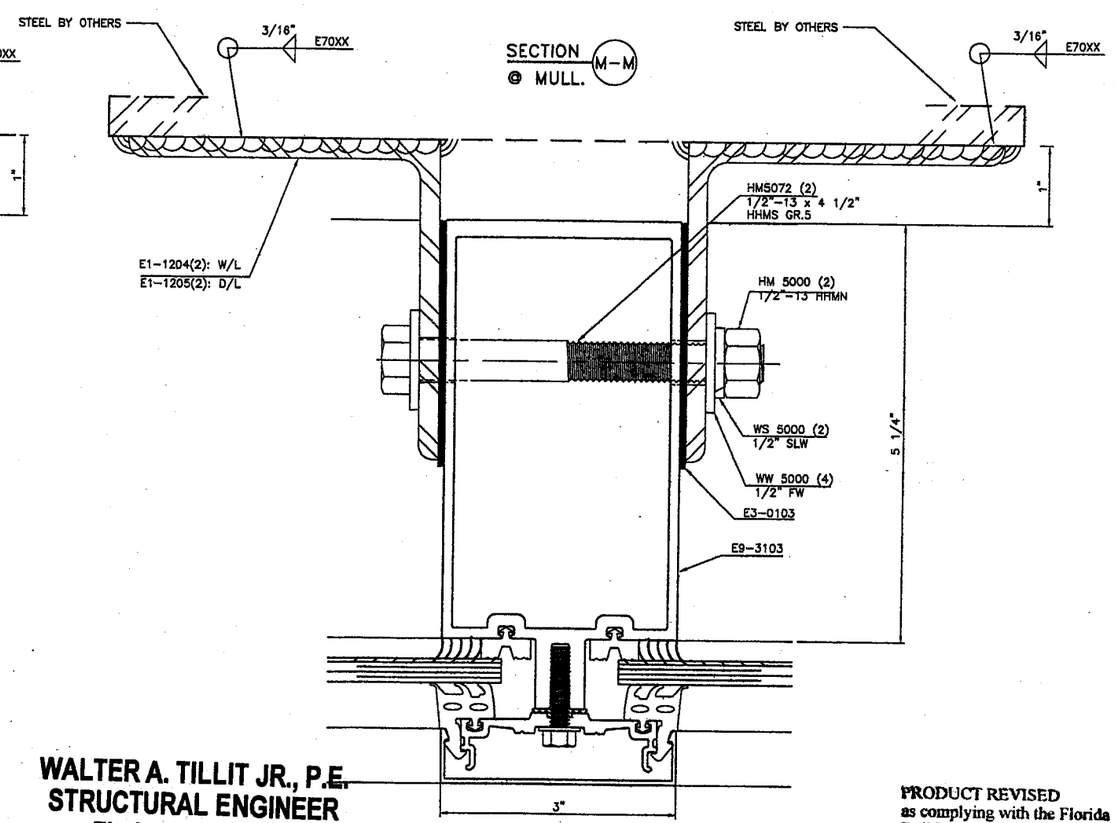

SECTION M-M
@ MULL.

SECTION N-N
@ MULL.

WALTER A. TILLIT JR., P.E.
STRUCTURAL ENGINEER
FL. LIC.NO. 44167

APR 12 2006

PRODUCT REVISED
as complying with the Florida
Building Code
Acceptance No 08-1224.15
Expiration Date 03/04/2011
By Manuel Inza
Miami-Dade Product Control
Division

TILLECO INC.

TILLIT TESTING & ENGINEERING COMPANY
6355 NW 36th STREET, STE. 305
MIAMI, FLORIDA 33166
FL E.B. LICENSE No. 0006719

PRODUCT REVIEWED
as complying with the Florida
Building Code
Acceptance No 06-0304.02
Expiration Date 03/04/11
By
Miami-Dade Product Control
Division

RESERVED FOR METRO-DADE USE ONLY

YKK AP America

YKK AP AMERICA, INC.
5630 GWALTNEY DRIVE
ATLANTA, GEORGIA 30336

SYSTEM	SCALE
YHC 300 SINGLE GLAZING SYSTEM	1/2

DESCRIPTION: SPLICE AND ANCHOR CLIP DETAILS

DRAWING NUMBER	REV.
YHC-300-OG-SL	A

APPROVED BY	DRAWN BY	DATE	SHEET NO.
JIA	RTB	8/5/02	15 OF 26

G:\SYSDWGS\YHC300OG\DADE\SINGLE\LARGEMISSILE\YHC300o15.DWG

REV.	DESCRIPTION	BY	DATE
A	NO CHANGE THIS SHEET	JIA	2/6/06

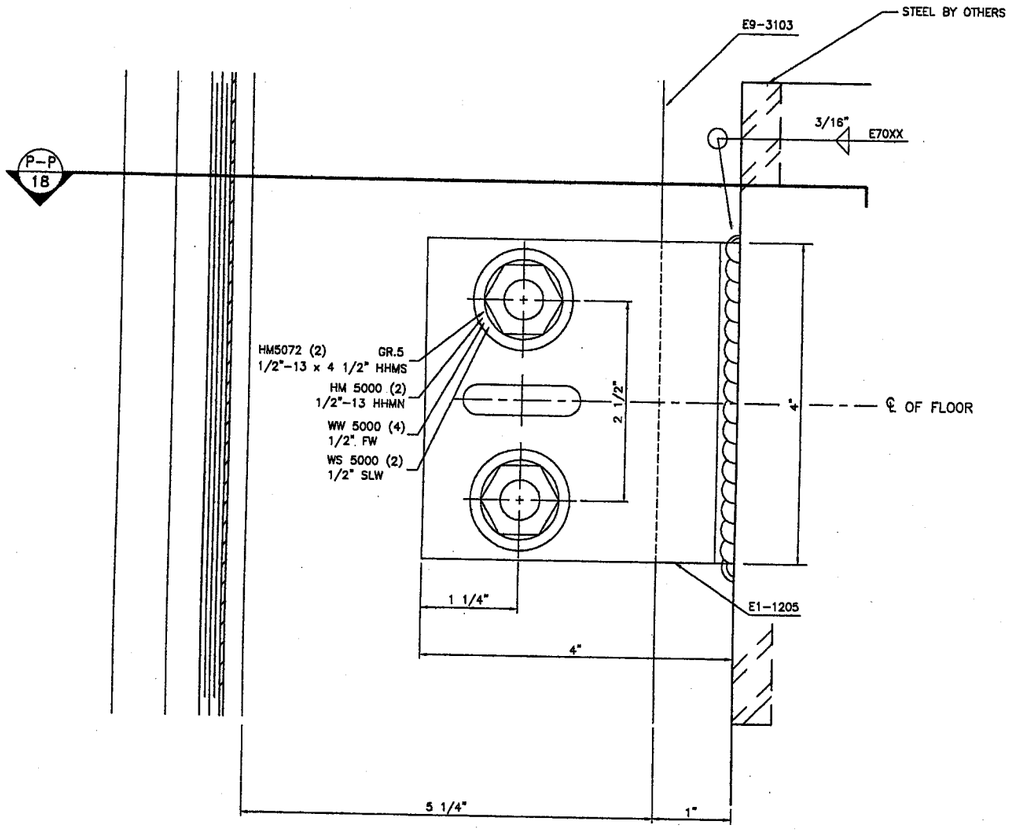

DEADLOAD ANCHOR CLIP

DETAIL (53)

@ JAMB

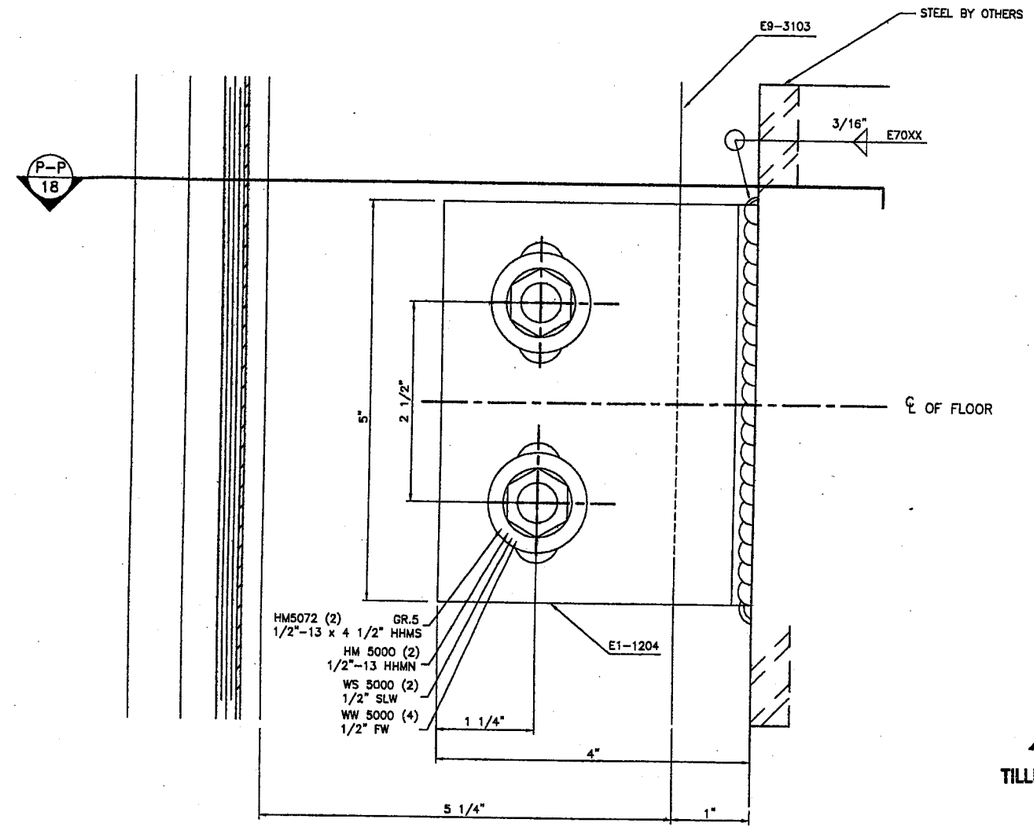

WINDLOAD ANCHOR CLIP

DETAIL (53A)

@ JAMB

TILLECO INC.

TILLIT TESTING & ENGINEERING COMPANY
6355 NW 36th STREET, STE. 305
MIAMI, FLORIDA 33166
FL E.B. LICENSE No. 0006719

PRODUCT REVISED
as complying with the Florida
Building Code
Acceptance No 06-0306.02
Expiration Date 03/04/11
By
Miami Dade Product Control
Division

RESERVED FOR METRO-DADE USE ONLY

WALTER A. TILLIT JR., P.E.
STRUCTURAL ENGINEER
FL. LIC.NO. 44167

APR 12 2006

PRODUCT REVISED
as complying with the Florida
Building Code
Acceptance No 08-1224.15
Expiration Date 03/04/2011
By
Miami Dade Product Control
Division

YKK AP America

YKK AP AMERICA, INC.
5830 GWALTNEY DRIVE
ATLANTA, GEORGIA 30336

SYSTEM	SCALE
YHC 300 SINGLE GLAZING SYSTEM	1/2

DESCRIPTION: MID-ANCHOR CLIP DETAILS

DRAWING NUMBER	REV.
YHC-300-OG-SL	A

APPROVED BY	DRAWN BY	DATE	SHEET NO.
JIA	RTB	8/5/02	16 OF 26

G:\SYSDWGS\YHC300OG\DADE\SINGLE\LARGEMISSILE\YHC300o16.DWG

REV.	DESCRIPTION	BY	DATE
A	NO CHANGE THIS SHEET	JIA	2/6/06

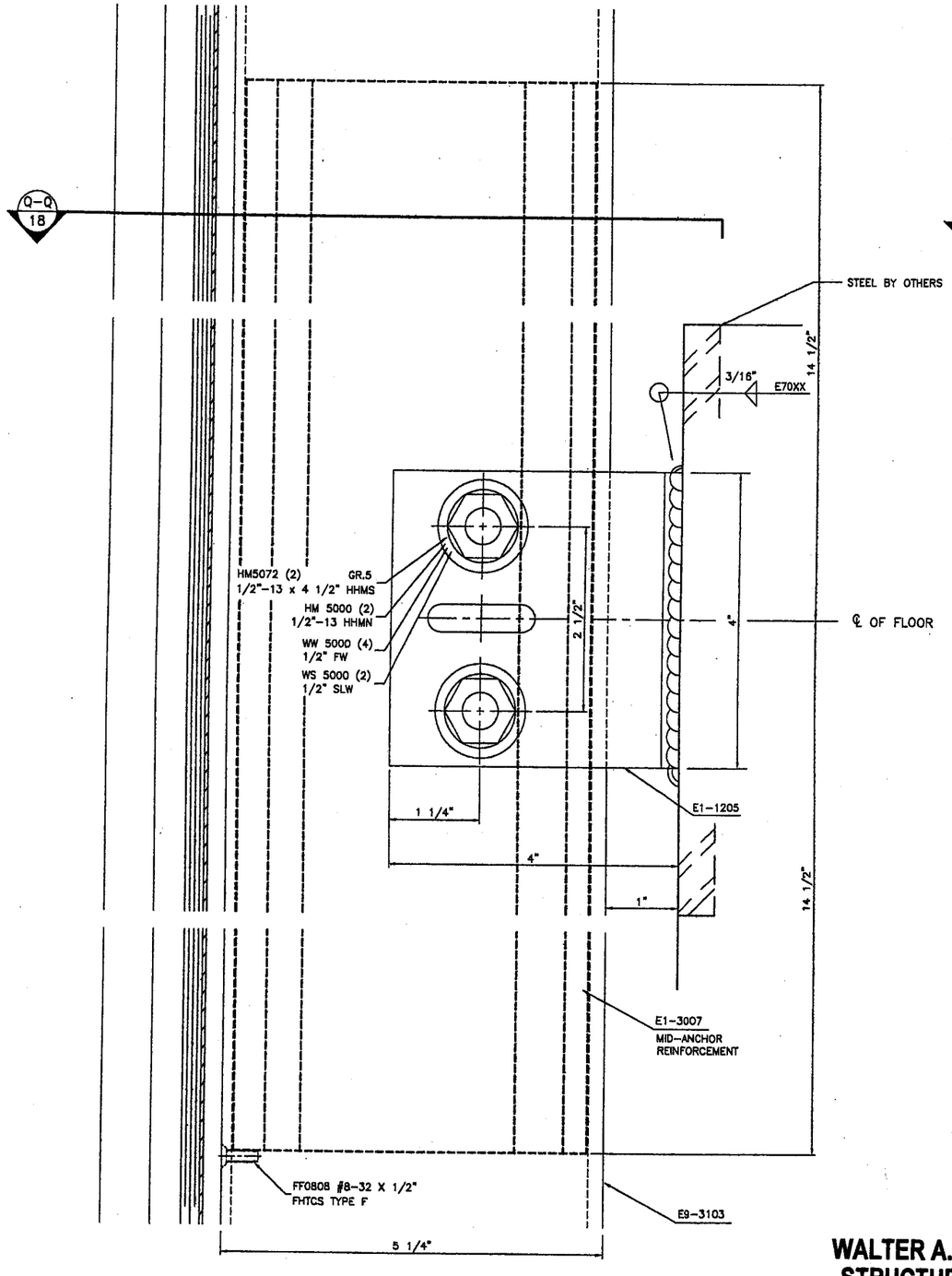

DEADLOAD ANCHOR CLIP

DETAIL 54

@ MULL.

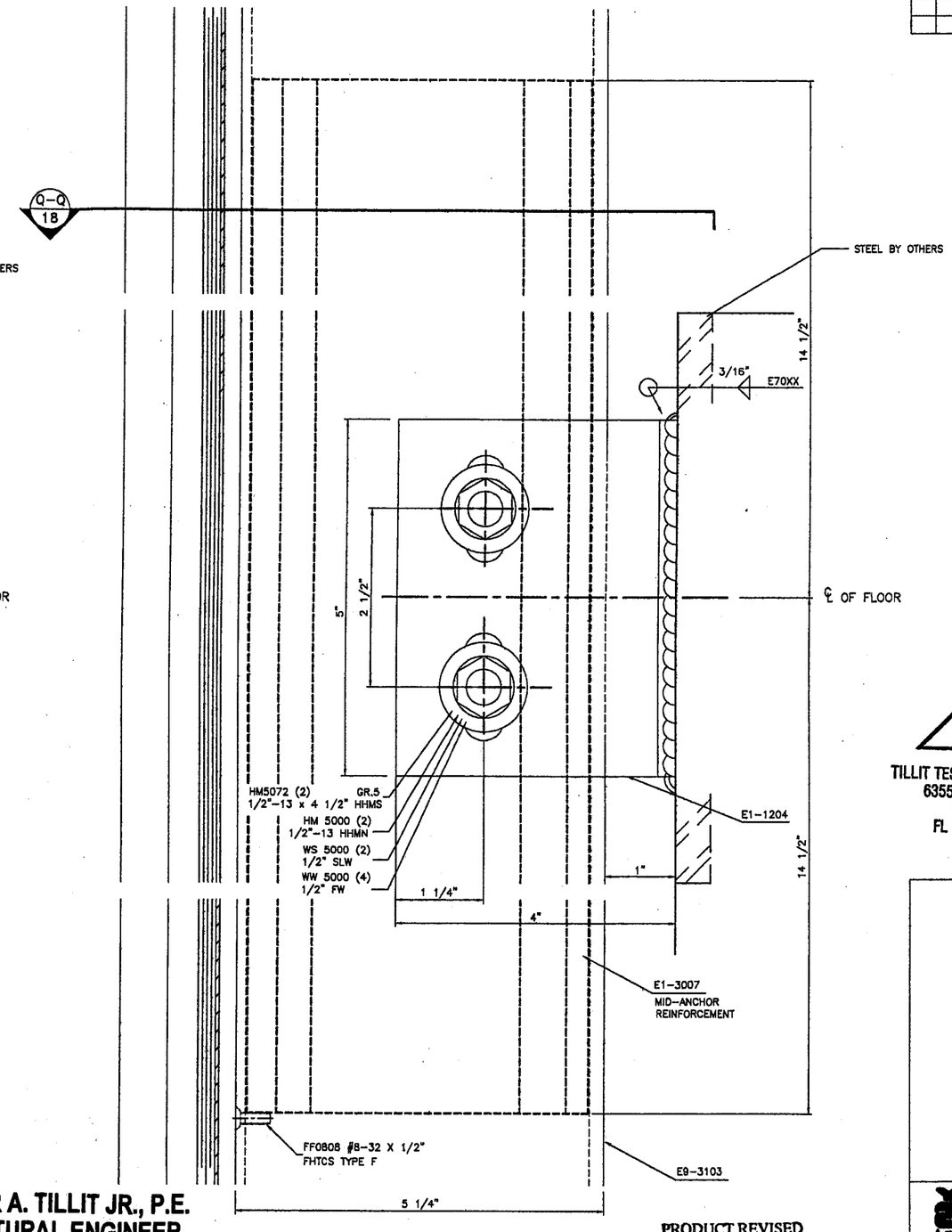

WINDLOAD ANCHOR CLIP

DETAIL 54A

@ MULL.

WALTER A. TILLIT JR., P.E.
STRUCTURAL ENGINEER
FL. LIC.NO. 44167

APR 12 2006

PRODUCT REVISED
as complying with the Florida
Building Code
Acceptance No 08-1224.15
Expiration Date 03/04/2011
By Miami Dade Product Control
Division

TILTECO INC.

TILLIT TESTING & ENGINEERING COMPANY
6355 NW 36th STREET, STE. 305
MIAMI, FLORIDA 33166
FL E.B. LICENSE No. 0006719

PRODUCT REVISED
as complying with the Florida
Building Code
Acceptance No 06-0306.02
Expiration Date 03/04/11
By
Miami Dade Product Control
Division

RESERVED FOR METRO-DADE USE ONLY

YKK AP America

YKK AP AMERICA, INC.
5630 GWALTNEY DRIVE
ATLANTA, GEORGIA 30336

SYSTEM	SCALE
YHC 300 SINGLE GLAZING SYSTEM	1/2

DESCRIPTION: MID-ANCHOR CLIP DETAILS

DRAWING NUMBER	REV.
YHC-300-OG-SL	A

APPROVED BY	DRAWN BY	DATE	SHEET NO.
JIA	RTB	8/5/02	17 OF 26

G:\SYSDWGS\YHC3000G\DADE\SINGLE\LARGEMISSILE\YHC300o17.DWG

REV.	DESCRIPTION	BY	DATE
A	NO CHANGE THIS SHEET	JIA	2/6/06

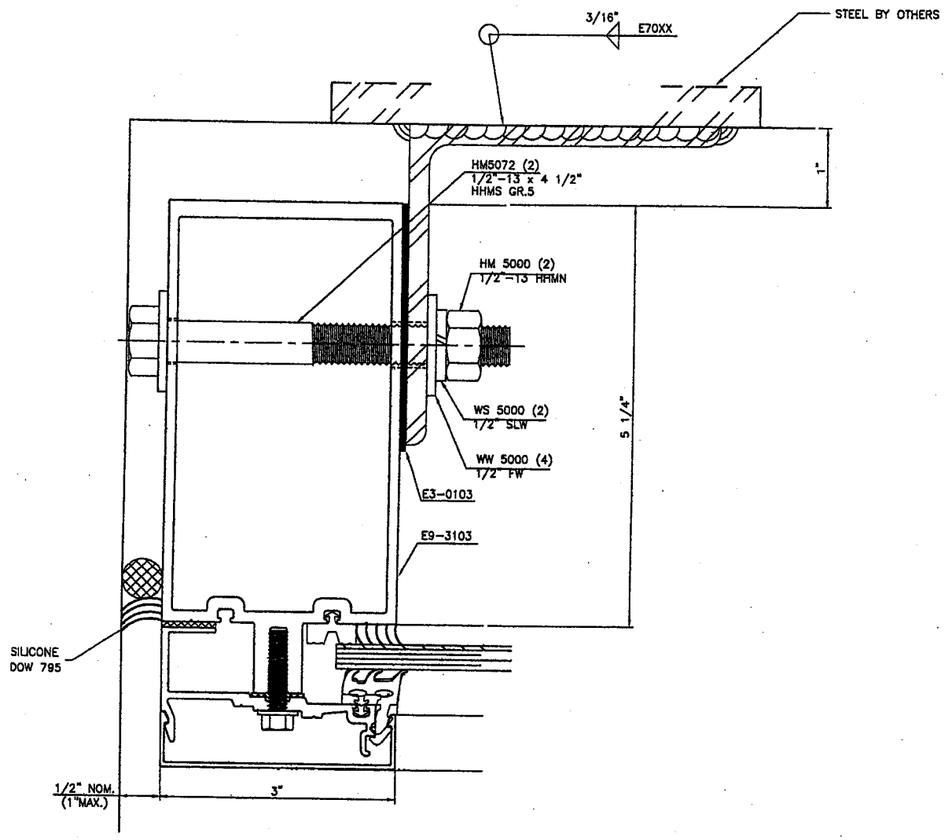

SECTION P-P

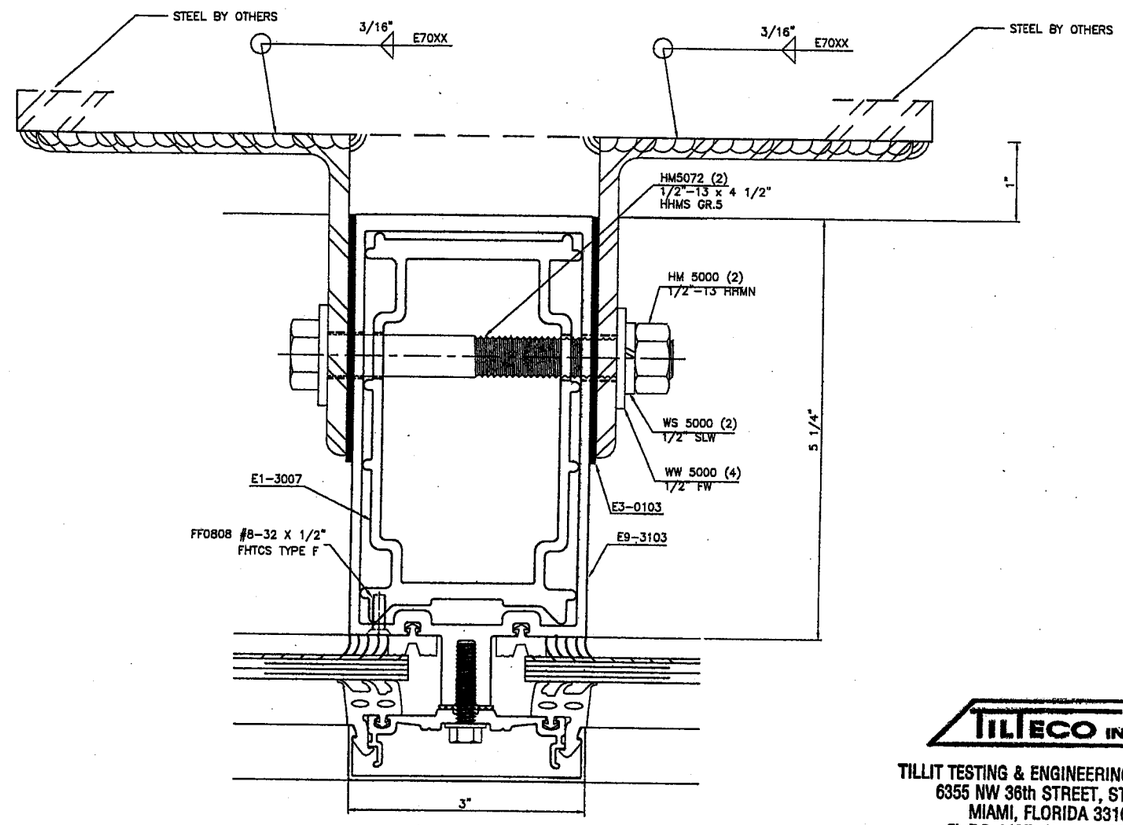

SECTION Q-Q

TILTECO INC.

TILLIT TESTING & ENGINEERING COMPANY
6355 NW 36th STREET, STE. 305
MIAMI, FLORIDA 33166
FL E.B. LICENSE No. 0006719

PRODUCT REVISED
as complying with the Florida
Building Code
Acceptance No 06-0306.02
Expiration Date 03/04/11
By
Miami Dade Product Control
Division

RESERVED FOR METRO-DADE USE ONLY

WALTER A. TILLIT JR., P.E.
STRUCTURAL ENGINEER
FL. LIC.NO. 44167

APR 12 2006

PRODUCT REVISED
as complying with the Florida
Building Code
Acceptance No 08-1224.15
Expiration Date 03/04/2011
By
Miami-Dade Product Control
Division

YKK AP America
YKK AP AMERICA, INC.
5630 GWALTNEY DRIVE
ATLANTA, GEORGIA 30336

SYSTEM	SCALE
YHC 300 SINGLE GLAZING SYSTEM	1/2
DESCRIPTION: MID-ANCHOR CLIP DETAILS	
DRAWING NUMBER: YHC-300-OG-SL	REV. A

APPROVED BY.	DRAWN BY	DATE	SHEET NO.
JIA	RTB	8/5/02	18 OF 26

G:\SYSDWGS\YHC3000G\DADE\SINGLE\LARGEMISSILE\YHC300o18.DWG

REV.	DESCRIPTION	BY	DATE
A	SECTIONS R, S, T & U	L.G.	2/28/06

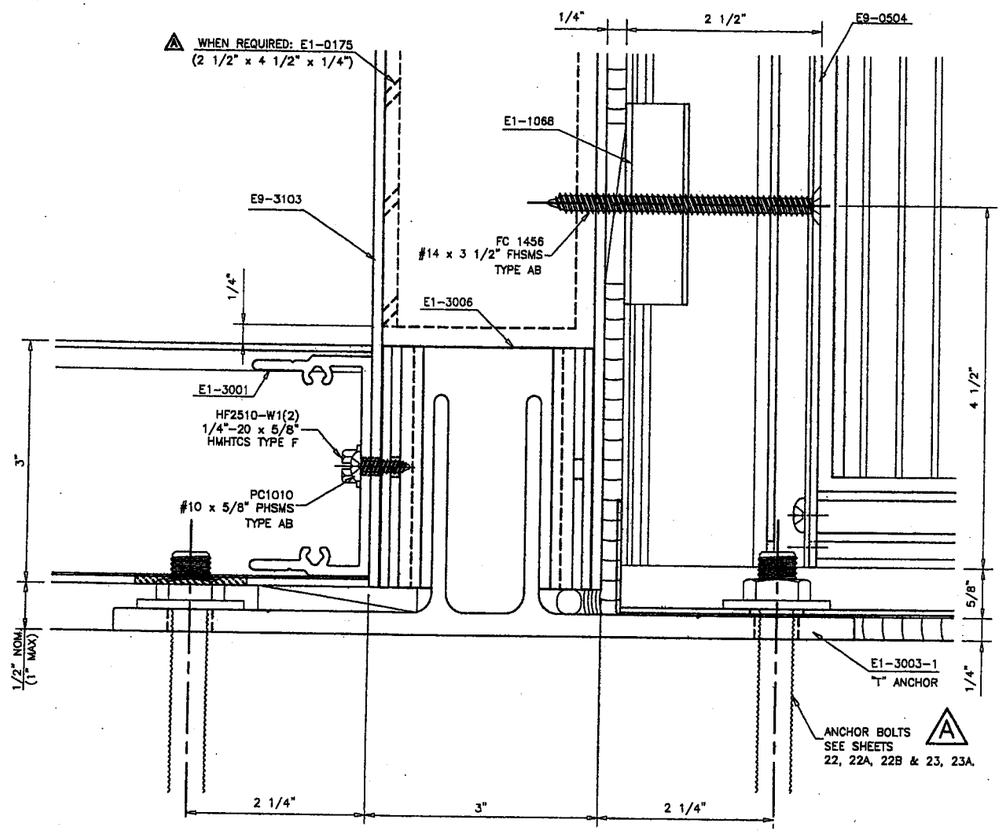

SECTION R-R @ DOOR

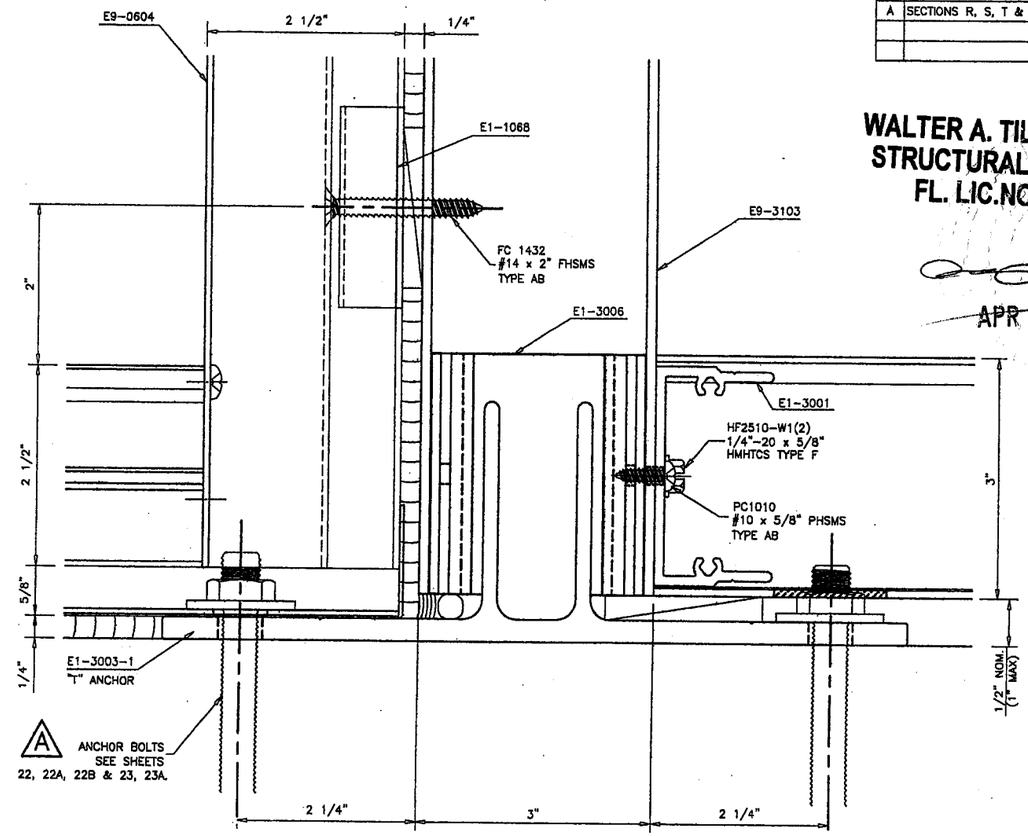

SECTION S-S @ STOREFRONT

WALTER A. TILLIT JR., P.E.
STRUCTURAL ENGINEER
FL. LIC.NO. 44167

APR 12 2006

TILLIT TESTING & ENGINEERING COMPANY INC.
6355 NW 36th STREET, STE. 305
MIAMI, FLORIDA 33166
FL E.B. LICENSE No. 0006719

SEE DETAIL OF DOOR AND STOREFRONT IN THE CORRESPONDING NOTICE OF ACCEPTANCE

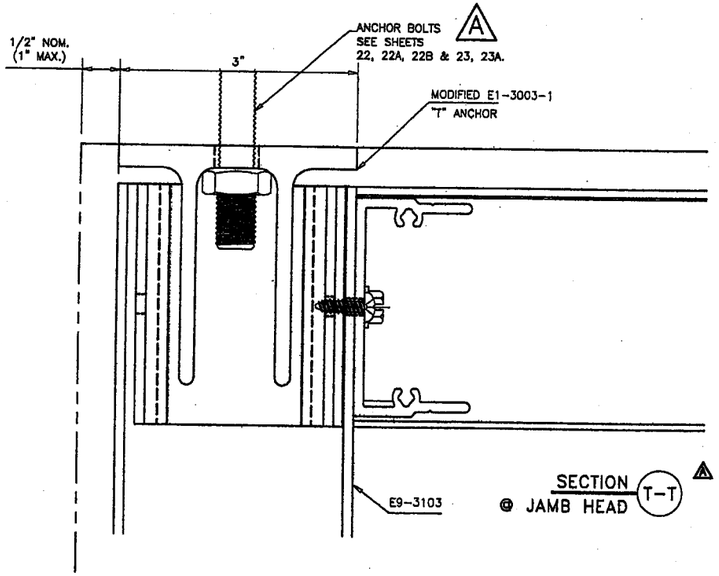

SECTION T-T @ JAMB HEAD — NEW

NOTCH SIDE WALL OF JAMB TO CLEAR FOR ANCHOR AND SLEEVE
PROCEDURE TO INSTALLATION:
1 INSTALL MODIFIED T ANCHOR AND SECURE ANCHOR BOLT IN PLACE
2. APPLY SLEEVE OVER ANCHOR AND LET IT REST
3. INSTALL JAMB MEMBER AFTER BY MOVING IT FROM THE SIDE OF THE OPENING TOWARDS THE ADJACENT WALL AND OVER ANCHOR ASSEMBLY.
4. CONTINUE REGULAR INSTALLATION.

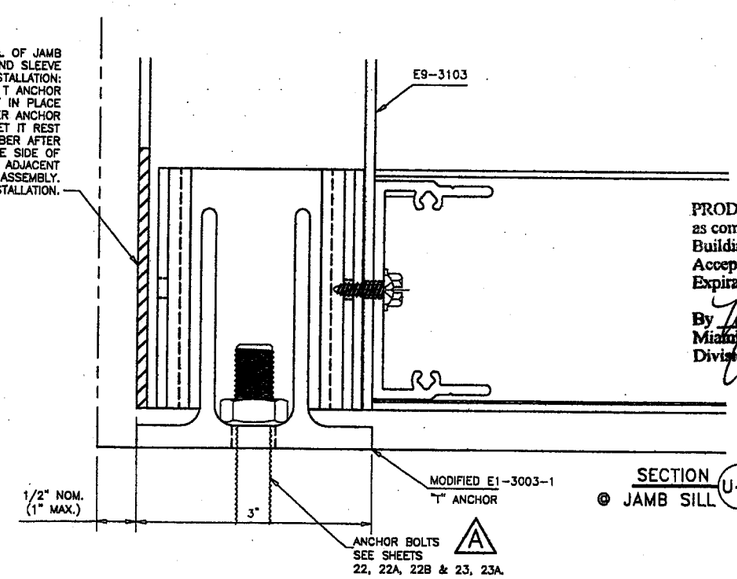

SECTION U-U @ JAMB SILL — NEW

PRODUCT REVISED
as complying with the Florida Building Code
Acceptance No 08-1224.15
Expiration Date 03/04/2011
By Miami Dade Product Control Division

PRODUCT REVISED
as complying with the Florida Building Code
Acceptance No 06-0306.02
Expiration Date 03/04/11
By Miami Dade Product Control Division

RESERVED FOR METRO-DADE USE ONLY

NOTE: USE ALT. DETAILS SHOWN ON T-T AND U-U FOR HIGH LOAD ONLY.

YKK ap America
YKK AP AMERICA, INC.
5630 GWALTNEY DRIVE
ATLANTA, GEORGIA 30336

SYSTEM	SCALE
YHC 300 SINGLE GLAZING SYSTEM	1/2

DESCRIPTION: STOREFRONT/DOOR SILL ANCHOR DETAILS

DRAWING NUMBER	REV.
YHC-300-OG-SL	A

APPROVED BY	DRAWN BY	DATE	SHEET NO.
JIA	RTB	8/5/02	19 OF 26

G:\SYSDWGS\YHC3000G\DADE\SINGLE\LARGEMISSILE\YHC300b19.DWG

MATERIAL LIST

	DESCRIPTION	SHAPE #	MATERIAL	BASIC DIMENSIONS	REMARK	REV
	VERT. MULL.	E9-3103	6063-T6	3" x 6 1/8"		A
	HORIZONTAL	E9-3106	6063-T6	3" x 6 1/8"		
	OPEN SIDE HORIZ.	E9-3105	6063-T6	3" x 6 1/8"	FOR SILL & HEAD	
	TYP. PRESS. PLATE	E9-3140	6063-T6	2 1/2" x 5/8"	FOR VERT. & HORIZ. MULLION	
	PERIM. PRESS. PL.	AS-3144	6063-T6	2 3/4" x 1 1/4"	FOR JAMB, HEAD & SILL	
	SNAP COVER	E9-3161	6063-T6	3" x 11/16"	FOR VERT. & HORIZ. MULLION	
	2 PIECE FLUSH FILLER	E9-3162	6063-T6	4 7/8" x 5/16"	FOR OPEN SIDE HORIZ.	
	ANGLE	E9-9303	6063-T6	1 1/2" x 1 1/2"	FOR 90° CORNER	

PART LIST

	SHEAR CLIP	E1-3001	6063-T6	4 1/2" LG.	HORIZ. TO VERT. CONNECTION	
	ANCHOR / SHEAR CLIP 45"	E1-3002	6063-T6	4 1/2" LG.	SILL TO VERT. CONNECTION	
	"T" ANCHOR	E1-3003	6063-T6	4" LG.	TOP ANCHOR	
	"F" ANCHOR	E1-3004	6063-T6	4" LG.	TOP JAMB ANCHOR	
	SPLICE SLEEVE	E1-3005	6063-T6	6" LG.	FOR MULTI-SPAN APPLICATION	
	ANCHOR SLEEVE	E1-3006	6063-T6	3" LG.	USE WITH 'T' & 'F' ANCHORS	
	REINF. SLEEVE	E1-3007	6063-T6	29" LG.	AT MID-SPAN ANCHOR IN TWIN SPAN	
	SPLICE SLEEVE	E1-3009	FORMED ALUM.	2" LG.	FOR COVER	
	END PLATE	E1-3011	ALUM. SHT.		FOR VERT. MULLION SINGLE GL.	
	MODIFIED "T" ANCHOR	E1-3003-1	6063-T6	4" LG.	TOP & BOTTOM JAMB ANCHOR	
	STEEL REINFORCEMENT	E1-0175	STEEL A36	2 1/2" x 4 1/2" x 1/4"	FOR INTERMEDIATE VERT.	A

DEPTH

SYSTEM YHC 300

DESCRIPTION HURRICANE CURTAINWALL

FINISH PAINTED OR ANODIZED

HARDWARE N/A

GLAZING SEE ELEVATION SHEET

BILL OF MATERIALS

FOR SINGLE GLAZING

PART LIST

	DESCRIPTION	PART #	MATERIAL	BASIC DIMENSIONS	COLOR	REMARK	REV
	EXT. GASKET 3/16" F.C.	E2-0351	EPDM		BLACK	EXTERIOR FOR 9/16" GLASS	
	EXT. GASKET 5/16" F.C.	E2-0352	EPDM		BLACK	EXTERIOR FOR 7/16" GLASS	
	EXT. GASKET 7/16" F.C.	E2-0360	EPDM		BLACK	EXTERIOR FOR 5/16" GLASS	
	SPACER GASKET	E2-0353	EPDM		BLACK	INTERIOR	
	END DAM BLOCK	E2-0358	E.V.A. SPONGE		GREY	AT EVERY HORIZ. END	
	ISOLATOR TAPE	E2-0356	PVC SPONGE	11/16" x 1/8"	BLACK	FOR PERIMETER PRESS. PLATE	
	SETTING BLOCK	E2-0357	EPDM	7/16" x 7/16" x 4" LG.	BLACK	FOR 1/4" SPANDREL GL. (2/LITE)	
	SLIP PAD	E3-0103	NYLON	3 3/4" x 5" x 1/16"	WHITE	FOR STEEL ANCHORS	
	FH SMS (F)	FF-0808	ST. ZINC PLATED	#8 x 1/2"		TO LOCATE E1-3007	
	FH SMS (AB)	FC-1016	ST. ZINC PLATED	#10 x 1"		FOR E9-3141 ADAPTOR	
	FH SMS (AB)	FC-1212	ST. ZINC PLATED	#12 x 3/4"		FOR SPLICE SLEEVE	
	FH SMS (AB)	FC-1220	ST. ZINC PLATED	#12 x 1 1/4"		FOR HORIZONTAL/SHEAR CLIP	
	FH SMS (AB)	FC-1410	ST. ZINC PLATED	#14 x 5/8"		FOR MULLION END CAP	
	PH SMS (AB)	PC-1010	ST. ZINC PLATED	#10 x 5/8"		FOR ANCHOR SLEEVE	
	HWH TCS (F)	HF2510-W1	ST. ZINC PLATED	1/4" - 20 x 5/8"		FOR SHEAR CLIP	
	HWH TCS (F)	HF2516-W1	ST. ZINC PLATED	1/4" - 20 x 1"		FOR SHEAR CLIP & STEEL REINF.	
	HH MS	HM-2516-W3	ST. ZINC PLATED	1/4" - 20 x 1"		FOR PRESSURE PLATE	
	BOLT	HM-3864	ST. ZINC PLATED	1/2"-13 x 4"		FOR "J" ANCHOR MULLION	
	BOLT	HM-3816	STEEL GR.5	1/2"-13 x 4"		FOR "J" ANCHOR JAMB	
	NUT 1/2"	HM-3800	STEEL GR.5	1/2"-13		FOR "J" ANCHOR MULL. & JAMB	
	WASHER 1/2"	WW-3800	ST. ZINC PLATED	1/2"		FOR "J" ANCHOR MULL. & JAMB	
	LOCK-WASHER 1/2"	WS-3800	ST. ZINC PLATED	1/2"		FOR "J" ANCHOR MULL. & JAMB	
	NUT - 1/2"	HM-5000	ST. ZINC PLATED	1/2" - 13		FOR INTERMEDIATE ANCHORS	
	WASHER - 1/2"	WN-5000	ST. ZINC PLATED	1/2"		FOR INTERMEDIATE ANCHORS	
	LOCKWASHER - 1/2"	WS-5000	ST. ZINC PLATED	1/2"		FOR INTERMEDIATE ANCHORS	
	BOLT	HM-5072	STEEL GR.5	1/2" - 13 x 4 1/2"		FOR INTERMEDIATE ANCHORS	
	STEEL ANGLE	E1-1204	STEEL A36	4" x 4" x 1/4" x 5" LG.		WINDLOAD ANCHORS	
	STEEL ANGLE	E1-1205	STEEL A36	4" x 4" x 1/4" x 4" LG.		DEADLOAD ANCHORS	
	DOW 795		SILICONE			FOR PERIMETER CAULKING	
	DOW 995		SILICONE			FOR STRUCTURAL CAULKING	

NOTE :

PRODUCT REVISED as complying with the Florida Building Code Acceptance No 08-1224.15 Expiration Date 03/04/2011 By Miami Dade Product Control Division

PRODUCT REVISED as complying with the Florida Building Code Acceptance No 06-0306.02 Expiration Date 03/04/11 By Miami Dade Product Control Division

LP LOOSE PART

S SELECTION PART

OP OPTION PART Y: COLOR INDICATED

REV	DESCRIPTION	BY	DATE
A	TO MEET FBC 2004	JIA	2/6/2006

NO. YHC-300-OG-SL A

CKD BY	BY	DATE	SHEET NO.
JIA	RTB	8/5/02	20 of 26

TILLIT TESTING & ENGINEERING COMPANY
6355 NW 36th STREET, STE. 305
MIAMI, FLORIDA 33166
FL E.B. LICENSE No. 0006719

APR 12 2006

WALTER A. TILLIT JR., P.E.
STRUCTURAL ENGINEER
FL. LIC.NO. 44167

G:\SYSDWGS\YHC300OG\DADE\SINGLE\LARGEMISSILE\YHC300p20.XLS

REV.	DESCRIPTION	BY	DATE
A	MULLION DIMENSION "b"	L.G.	2/28/06

YHC 300 O/G SINGLE SPAN

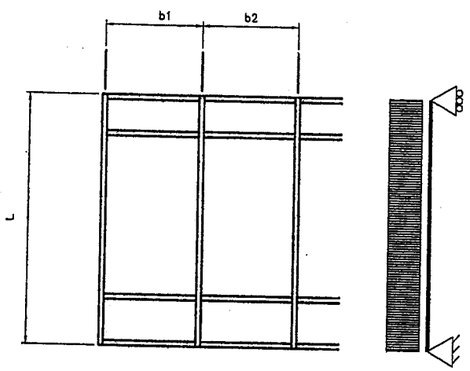

(A) MULLION DIMENSION $b = \frac{b1 + b2}{2}$

YHC 300 O/G TWIN SPAN

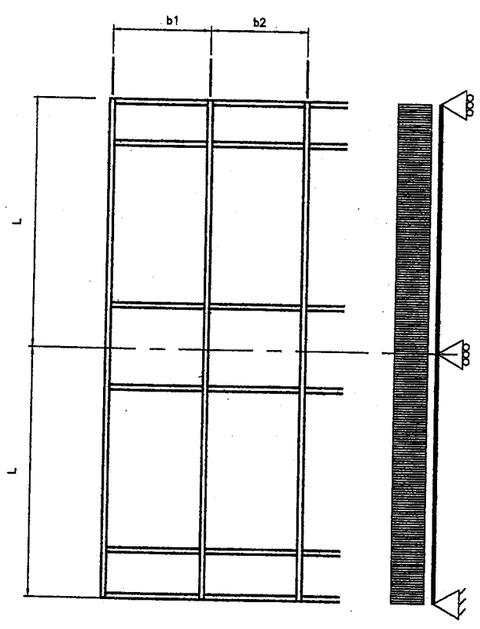

(A) MULLION DIMENSION $b = \frac{b1 + b2}{2}$

MAXIMUM MULLION SPAN "L" (Ft) SCHEDULE FOR A GIVEN MULLION (A) DIMENSION "b" (Ft) AND A GIVEN DESIGN WIND LOAD "W" (psf)

CASE 1 : SINGLE SPAN WITH UNREINFORCED MULLION. (SEE DETAIL 3/SHT. 4)

CASE 2 : SINGLE SPAN WITH REINFORCED MULLION FULL HEIGHT. (SEE DETAIL 2/SHT.4) (LENGTH OF E1-0175=L-6 1/2")

CASE 3 : TWIN SPANS WITH REINFORCED MULLION AT INTERMEDIATE SUPPORT ONLY.(SEE DET'S 54 & 54A/SHT.17 & SECT QQ/SHT. 19) (LENGTH OF E1-3007=29")

(A)

MAXIMUM DESIGN LOAD "W"	MULLION DIMENSION "b"	CASE 1 "L"	CASE 2 "L"	CASE 3 "L"
±60.0	3'-0"	11'-6"	14'-0"	14'-0"
	3'-6"	11'-6"	14'-0"	14'-0"
	4'-0"	11'-6"	14'-0"	14'-0"
	4'-6"	10'-11"	14'-0"	14'-0"
	5'-0"	10'-5"	14'-0"	14'-0"
	5'-6"	9'-11"	13'-7"	13'-7"
	6'-0"	9'-6"	13'-3"	13'-3"
±65.0	3'-0"	11'-6"	14'-0"	14'-0"
	3'-6"	11'-6"	14'-0"	14'-0"
	4'-0"	11'-2"	14'-0"	14'-0"
	4'-6"	10'-6"	14'-0"	14'-0"
	5'-0"	10'-0"	13'-8"	13'-8"
	5'-6"	9'-6"	13'-3"	13'-3"
	6'-0"	9'-1"	12'-10"	12'-10"
±70.0	3'-0"	11'-6"	14'-0"	14'-0"
	3'-6"	11'-6"	14'-0"	14'-0"
	4'-0"	10'-9"	14'-0"	14'-0"
	4'-6"	10'-2"	13'-10"	13'-10"
	5'-0"	9'-7"	13'-4"	13'-4"
	5'-6"	9'-2"	12'-11"	12'-11"
	6'-0"	8'-9"	12'-7"	12'-7"
±75.0	3'-0"	11'-6"	14'-0"	14'-0"
	3'-6"	11'-1"	14'-0"	14'-0"
	4'-0"	10'-4"	14'-0"	14'-0"
	4'-6"	9'-9"	13'-6"	13'-6"
	5'-0"	9'-3"	13'-0"	13'-0"
	5'-6"	8'-10"	12'-7"	12'-7"
	6'-0"	8'-6"	12'-3"	12'-3"

(A)

MAXIMUM DESIGN LOAD "W"	MULLION DIMENSION "b"	CASE 1 "L"	CASE 2 "L"	CASE 3 "L"
±80.0	3'-0"	11'-6"	14'-0"	14'-0"
	3'-6"	10'-9"	14'-0"	14'-0"
	4'-0"	10'-0"	13'-9"	13'-9"
	4'-6"	9'-6"	13'-3"	13'-3"
	5'-0"	9'-0"	12'-9"	12'-9"
	5'-6"	8'-7"	12'-4"	12'-4"
	6'-0"	7'-11"	11'-8"	11'-8"
±85.0	3'-0"	11'-3"	14'-0"	14'-0"
	3'-6"	10'-5"	14'-0"	14'-0"
	4'-0"	9'-9"	13'-5"	13'-5"
	4'-6"	9'-2"	13'-0"	13'-0"
	5'-0"	8'-9"	12'-6"	12'-6"
	5'-6"	8'-2"	12'-0"	12'-0"
	6'-0"	7'-6"	11'-0"	11'-0"
±90.0	3'-0"	10'-11"	14'-0"	14'-0"
	3'-6"	10'-1"	13'-10"	13'-10"
	4'-0"	9'-6"	13'-3"	13'-3"
	4'-6"	8'-11"	12'-9"	12'-9"
	5'-0"	8'-6"	12'-6"	12'-6"
	5'-6"	7'-8"	11'-4"	11'-4"
	6'-0"	7'-0"	10'-4"	10'-4"

TILLECO INC.
TILLIT TESTING & ENGINEERING COMPANY
6355 NW 36th STREET, STE. 305
MIAMI, FLORIDA 33166
FL E.B. LICENSE No. 0006719

PRODUCT REVISED
as complying with the Florida Building Code
Acceptance No 06-0304.02
Expiration Date 03/04/11
By
Miami Dade Product Control Division

RESERVED FOR METRO-DADE USE ONLY

WALTER A. TILLIT JR., P.E.
STRUCTURAL ENGINEER
FL. LIC.NO. 44167

APR 12 2006

PRODUCT REVISED
as complying with the Florida Building Code
Acceptance No 08-1224.15
Expiration Date 03/09/2011
By
Miami Dade Product Control Division

YKK ap America
YKK AP AMERICA, INC.
5630 GWALTNEY DRIVE
ATLANTA, GEORGIA 30336

SYSTEM	SCALE
YHC 300 SINGLE GLAZING SYSTEM	NONE

DESCRIPTION: MULLION CHART

DRAWING NUMBER	REV.
YHC-300-OG-SL	A

APPROVED BY	DRAWN BY	DATE	SHEET NO.
JIA	JIA	8/5/02	21 of 26

G:\SYSDWGS\YHC300OG\DADE\SINGLE\LARGEMISSILE\YHC300-21.DWG

REV.	DESCRIPTION	BY	DATE
A	CONDITIONS 1 TO 8 & NEW 1A/5A	L.G.	2/28/06
	+ ANCHOR BOLT SCHEDULE		
B	ANCHOR "F" MIN. E.D. & SPACING	L.G.	4/7/06

YHC 300 O/G SINGLE SPAN

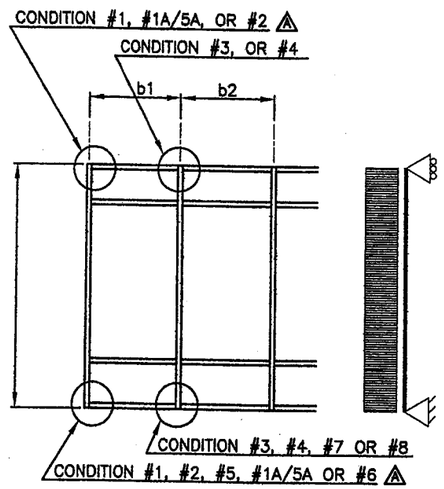

⚠ MULLION DIMENSION $b = \frac{b1 + b2}{2}$

ANCHOR BOLT SCHEDULE ⚠

ALL ANCHOR BOLTS SHALL BE INSTALLED STRICTLY FOLLOWING THE ANCHOR MANUFACTURER'S SPECS AND RECOMMENDATIONS.

ANCHOR BOLT TYPE	DIAMETER & MODEL NAME	MANUFACTURER	Min. EDGE DISTANCE	Min. EMBEDMENT	Min. SPACING	SUBSTRATE
"A"	1/2"ø KWIK BOLT 3	HILTI, INC	3 3/8"	2 1/4"	3" O.C.	f'c=3ksi CONCRETE
"B"	1/2"ø HVA W/ SUPER HAS ROD	HILTI, INC	3"	4 1/4"	3" O.C.	f'c=3ksi CONCRETE
"A1"	1/2"ø KWIK BOLT 3	HILTI, INC	3 3/8"	2 1/4"	3 3/8"	f'c=3ksi CONCRETE
"B1"	1/2"ø HVA W/ SUPER HAS ROD	HILTI, INC	3"	4 1/4"	3 3/8"	f'c=3ksi CONCRETE
"C"	5/8"ø POWER BOLT	POWERS FASTENERS,INC	5"	4"	7 1/2" O.C.	f'c=3ksi CONCRETE
"D"	1/2"ø HVA W/ SUPER HAS ROD	HILTI, INC	5"	4 1/4"	7 1/2" O.C.	f'c=3ksi CONCRETE
"E"	1/2"ø POWER BOLT	POWERS FASTENERS,INC	3 1/2"	4"	7 1/2" O.C.	f'c=3ksi CONCRETE
"F"	1/2"ø BOLT W/ NUT & WASHERS	GRADE 5 STEEL *	⚠ 1"	N/A	⚠ 3" O.C.	1/4" Min. STEEL

* SHALL COMPLY W/ DIN 50018.

TILLECO INC.

TILLIT TESTING & ENGINEERING COMPANY
6355 NW 36th STREET, STE. 305
MIAMI, FLORIDA 33166
FL E.B. LICENSE No. 0006719

CONDITION #8

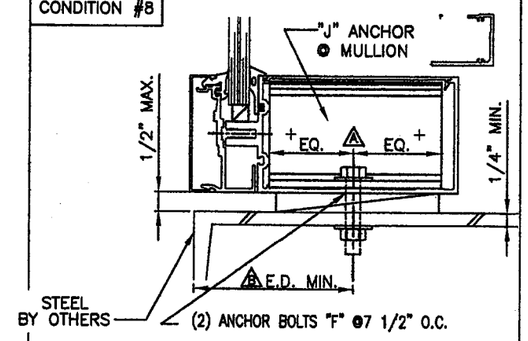

CONDITION #7

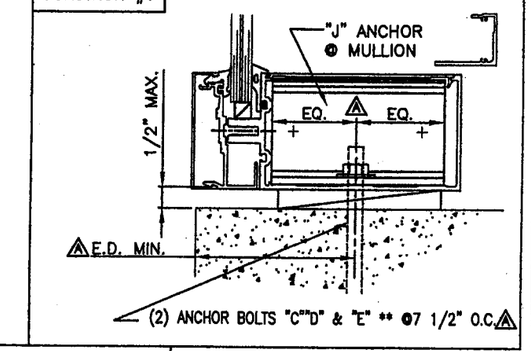

CONDITION #1

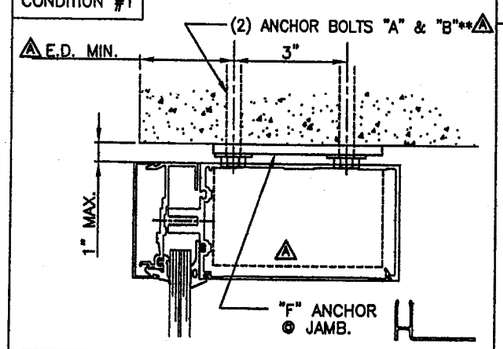

CONDITION #1A/5A ⚠

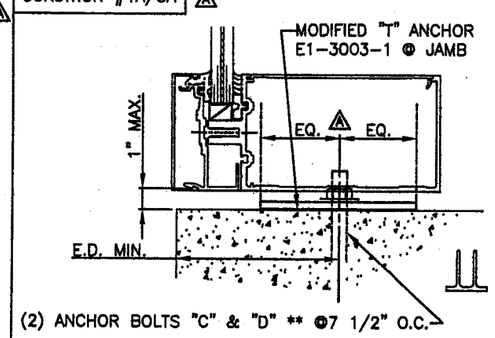

PRODUCT REVISED
as complying with the Florida Building Code
Acceptance No 08-1224.15
Expiration Date 03/04/2011
By Manuel Perez
Miami-Dade Product Control Division

CONDITION #6

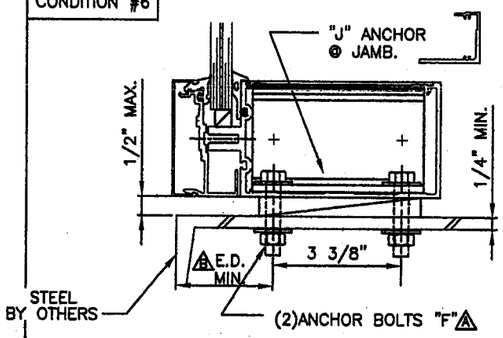

WALTER A. TILLIT JR., P.E.
STRUCTURAL ENGINEER
FL. LIC.NO. 44167

APR 12 2006

PRODUCT REVISED
as complying with the Florida Building Code
Acceptance No 06-0306.02
Expiration Date 03/04/11
By
Miami-Dade Product Control Division

CONDITION #2

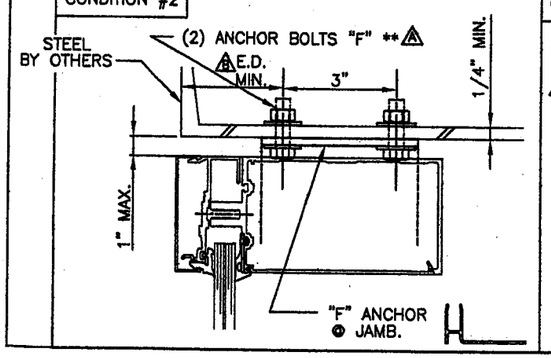

CONDITION #3

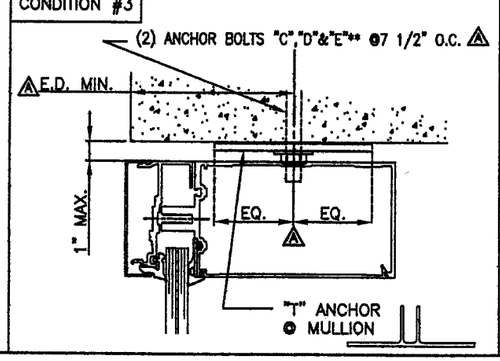

CONDITION #4

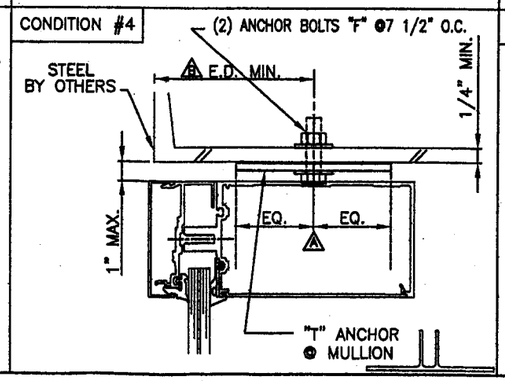

CONDITION #5

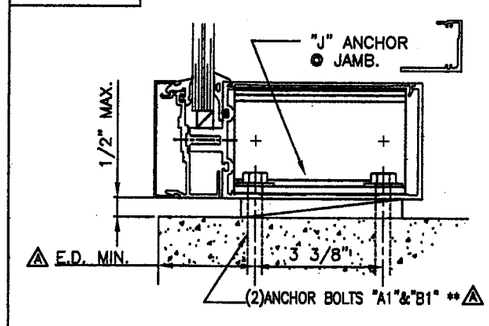

RESERVED FOR METRO-DADE USE ONLY

YKK AP America
YKK AP AMERICA, INC.
5630 GWALTNEY DRIVE
ATLANTA, GEORGIA 30336

SYSTEM	SCALE
YHC 300 SINGLE GLAZING SYS.	1/2

DESCRIPTION: ANCHOR BOLT GUIDE -SINGLE SPAN-

DRAWING NUMBER	REV.
YHC-300-OG-SL	A

APPROVED BY	DRAWN BY	DATE	SHEET NO.
JIA	JIA	8/5/02	22 OF 26

G:\SYSDWGS\YHC300OG\DADE\SINGLE\LARGEMISSILE\YHC300p22.DWG

ANCHOR BOLT'S PRESSURE RATING : SINGLE SPAN

REV.	DESCRIPTION	BY	DATE

MULLION SPAN "L"	MULLION DIMENS. "b"	DESIGN LOAD OF ANCHOR BOLTS (psf) POSITIVE OR NEGATIVE											
		CONDITION # 1		CONDITION # 3			CONDITION # 5		CONDITION # 7			CONDITION # 1A/5A	
		OPTIONAL ANCHOR BOLTS TYPE											
		A	B	C	D	E	A1	B1	C	D	E	C	D
8'-6"	4'-6"	90	90	90	90	90	90	90	90	90	90	90	90
	4'-9"	90	88.7	90	90	90	90	90	90	90	90	90	90
	5'-0"	87.0	84.2	90	90	90	89.4	90	90	90	90	90	90
	5'-3"	82.8	80.2	90	90	90	85.2	87.1	90	90	88.5	90	90
	5'-6"	79.1	76.6	90	90	89.3	81.3	83.2	90	90	89.4	90	90
	5'-9"	75.6	73.2	90	90	85.4	77.7	79.5	90	90	81.8	90	90
	6'-0"	72.5	70.2	90	90	81.9	74.5	78.2	90	90	77.4	90	90
9'-0"	4'-3"	90	90	90	90	90	90	90	90	90	90	90	90
	4'-6"	90	88.4	90	90	90	90	90	90	90	90	90	90
	4'-9"	86.5	83.7	90	90	90	88.9	90	90	90	90	90	90
	5'-0"	82.1	79.6	90	90	90	84.4	86.4	90	90	87.7	90	90
	5'-3"	78.2	75.8	90	90	88.4	80.4	82.3	90	90	83.6	90	90
	5'-6"	74.7	72.3	90	90	84.4	76.8	78.5	90	90	79.8	90	90
	5'-9"	71.4	69.2	90	90	80.7	73.4	75.1	90	90	76.3	90	90
	6'-0"	68.4	66.3	90	90	77.3	70.4	72.0	87.9	90	73.1	89.1	90
9'-6"	4'-0"	90	90	90	90	90	90	90	90	90	90	90	90
	4'-3"	90	88.7	90	90	90	90	90	90	90	90	90	90
	4'-6"	86.5	83.7	90	90	90	88.9	90	90	90	90	90	90
	4'-9"	81.9	79.3	90	90	90	84.2	86.2	90	90	87.5	90	90
	5'-0"	77.8	75.4	90	90	87.9	80.0	81.9	90	90	83.1	90	90
	5'-3"	74.1	71.8	90	90	83.7	76.2	78.0	90	90	79.2	90	90
	5'-6"	70.7	68.5	90	90	79.9	72.7	74.4	90	90	75.6	90	90
	5'-9"	67.7	65.5	90	90	76.4	69.6	71.2	86.8	90	72.3	90	90
	6'-0"	64.8	62.8	89	90	73.3	66.7	68.2	86.3	90	69.3	90	90
10'-0"	3'-9"	90	90	90	90	90	90	90	90	90	90	90	90
	4'-0"	90	89.5	90	90	90	90	90	90	90	90	90	90
	4'-3"	87.0	84.2	90	90	90	89.4	90	90	90	90	90	90
	4'-6"	82.1	79.6	90	90	90	84.4	86.4	90	90	87.7	90	90
	4'-9"	77.8	75.4	90	90	87.9	80.0	81.9	90	90	83.1	90	90
	5'-0"	73.9	71.6	90	90	83.5	76.0	77.8	90	90	79.0	90	90
	5'-3"	70.4	68.2	90	90	79.5	72.4	74.1	90	90	75.2	90	90
	5'-6"	67.2	65.1	90	90	75.9	69.1	70.7	86.3	90	71.8	90	90
	5'-9"	64.3	62.3	88.2	90	72.6	66.1	67.6	82.5	90	68.7	88.3	90
	6'-0"	61.6	59.7	84.6	90	69.6	63.3	64.8	79.1	90	65.8	84.6	90

MULLION SPAN "L"	MULLION DIMENS. "b"	DESIGN LOAD OF ANCHOR BOLTS (psf) POSITIVE OR NEGATIVE											
		CONDITION # 1		CONDITION # 3			CONDITION # 5		CONDITION # 7			CONDITION # 1A/5A	
		OPTIONAL ANCHOR BOLTS TYPE											
		A	B	C	D	E	A1	B1	C	D	E	C	D
10'-6"	3'-9"	90	90	90	90	90	90	90	90	90	90	90	90
	4'-0"	88.0	85.2	90	90	90	90	90	90	90	90	90	90
	4'-3"	82.8	80.2	90	90	90	85.2	87.1	90	90	88.5	90	90
	4'-6"	78.2	75.8	90	90	88.4	80.4	82.3	90	90	83.6	90	90
	4'-9"	74.1	71.8	90	90	83.7	76.2	78.0	90	90	79.2	90	90
	5'-0"	70.4	68.2	90	90	79.5	72.4.	74.1	90	90	75.2	90	90
	5'-3"	67.0	64.9	90	90	75.8	68.9	70.5	86.1	90	71.6	90	90
	5'-6"	64.0	62.0	87.9	90	72.3	65.8	67.3	82.1	90	68.4	87.9	90
	5'-9"	61.2	59.3	84.0	90	69.2	62.9	64.4	78.6	90	65.4	84.2	90
	6'-0"	58.7	56.8	80.5	90	66.3	60.3	61.7	75.3	90	62.7	80.6	90
11'-0"	3'-9"	89.6	86.8	90	90	90	90	90	90	90	90	90	90
	4'-0"	84.0	81.4	90	90	90	86.4	88.4	90	90	89.7	90	90
	4'-3"	79.1	76.6	90	90	89.3	81.3	83.2	90	90	84.4	90	90
	4'-6"	74.7	72.3	90	90	84.4	76.8	78.5	90	90	79.8	90	90
	4'-9"	70.7	68.5	90	90	79.9	72.7	74.4	90	90	75.6	90	90
	5'-0"	67.2	65.1	90	90	75.9	69.1	70.7	86.3	90	71.8	90	90
	5'-3"	64.0	62.0	87.9	90	72.3	85.8	67.3	82.1	90	68.4	87.9	90
	5'-6"	61.1	59.2	83.9	90	69.0	52.8	64.3	78.4	90	65.3	83.9	90
	5'-9"	58.4	56.6	80.2	90	66.0	60.1	61.5	75.0	90	62.4	80.3	90
	6'-0"	56.0	54.2	76.9	90	63.3	57.6	58.9	71.9	90	59.8	76.9	90
11'-6"	3'-9"	85.7	83.0	90	90	90	88.1	90	90	90	90	90	90
	4'-0"	80.3	77.8	90	90	90	82.6	84.5	90	90	85.8	90	90
	4'-3"	75.6	73.2	90	90	85.4	77.7	79.5	90	90	80.8	90	90
	4'-6"	71.4	69.2	90	90	80.7	73.4	75.1	90	90	76.3	90	90
	4'-9"	67.7	65.5	90	90	76.4	69.6	71.2	86.8	90	72.3	90	90
	5'-0"	64.3	62.3	88.2	90	72.6	66.1	67.6	82.5	90	68.7	88.3	90
	5'-3"	61.2	59.3	84.0	90	69.2	62.9	64.4	78.6	90	65.4	84.1	90
	5'-6"	58.4	56.6	80.2	90	66.0	60.1	61.5	75.0	90	62.4	80.3	90
	5'-9"	55.9	54.1	76.7	90	63.2	57.5	58.8	71.7	90	59.7	76.8	90
	6'-0"	53.6	51.9	73.5	90	65.5	55.1	56.3	68.8	90	57.2	73.6	90

NOTE: MULLION SPAN "L" FOR A GIVEN MULLION DIMENSION "b" SHALL NOT EXCEED MAXIMUN VALUES INDICATED ON SCHEDULE ON SHEET 21.

APR 12 2006

WALTER A. TILLIT JR., P.E.
STRUCTURAL ENGINEER
FL. LIC.NO. 44167

PRODUCT REVISED
as complying with the Florida Building Code
Acceptance No 08-1224.15
Expiration Date 03/04/2011
By Manuel Perez
Miami Dade Product Control Division

TILTECO INC.

TILLIT TESTING & ENGINEERING COMPANY
6355 NW 36th STREET, STE. 305
MIAMI, FLORIDA 33166
FL E.B. LICENSE No. 0006719

PRODUCT REVISED
as complying with the Florida Building Code
Acceptance No 06-0306.02
Expiration Date 03/04/11
By
Miami Dade Product Control Division

RESERVED FOR METRO-DADE USE ONLY

YKK AP America

YKK AP AMERICA, INC.
5630 GWALTNEY DRIVE
ATLANTA, GEORGIA 30336

SYSTEM	SCALE
YHC 300 SINGLE GLAZING SYSTEM	1/2
DESCRIPTION: ANCHOR BOLT GUIDE -SINGLE SPAN-	
DRAWING NUMBER: YHC-300-OG-SL	REV.

APPROVED BY	DRAWN BY	DATE	SHEET NO.
JIA	JIA	8/5/02	22A OF 26

G:\SYSDWGS\YHC3000G\DADE\SINGLE\LARGEMISSILE\YHC300p22A.DWG

REV.	DESCRIPTION	BY	DATE

ANCHOR BOLT'S PRESSURE RATING : SINGLE SPAN
(CONTINUED)

MULLION SPAN "L"	MULLION DIMENS. "b"	DESIGN LOAD OF ANCHOR BOLTS (psf) POSITIVE OR NEGATIVE											
		CONDITION # 1		CONDITION # 3			CONDITION # 5		CONDITION # 7			CONDITION # 1A/5A	
		OPTIONAL ANCHOR BOLTS TYPE											
		A	B	C	D	E	A1	B1	C	D	E	C	D
12'-0"	4'-0"	77.0	74.6	90	90	87	72.2	81.0	90	90	82.3	90	90
	4'-3"	72.5	70.2	90	90	81.9	74.5	76.2	90	90	77.4	90	90
	4'-6"	68.4	66.3	90	90	77.3	70.4	72.0	87.9	90	73.1	90	90
	4'-9"	64.8	62.8	89.0	90	73.3	66.7	68.2	83.2	90	69.3	89.1	90
	5'-0"	61.6	59.7	84.6	90	69.6	63.3	64.8	79.1	90	65.8	84.6	90
	5'-3"	58.7	56.8	80.5	90	66.3	60.3	61.7	75.3	90	62.7	80.6	90
	5'-6"	56.0	54.2	76.9	90	63.3	57.6	58.9	71.9	90	59.8	76.9	90
	5'-9"	53.6	51.9	73.5	90	60.5	55.1	56.3	68.8	90	57.2	73.6	90
	6'-0"	51.3	49.7	70.5	90	58	52.8	54.0	65.9	90	54.8	70.5	90
12'-6"	4'-0"	73.9	71.6	90	90	83.5	70.6	77.8	90	90	79.0	90	90
	4'-3"	69.6	67.4	90	90	78.6	71.5	73.2	89.3	90	74.3	90	90
	4'-6"	65.7	63.6	90	90	74.2	67.6	69.1	84.3	90	70.2	90	90
	4'-9"	62.2	60.3	85.5	90	70.3	64.0	65.5	79.4	90	66.5	85.5	90
	5'-0"	59.1	57.3	81.2	90	66.8	60.8	62.2	75.9	90	63.2	81.2	90
	5'-3"	56.3	54.6	77.3	90	63.6	57.9	59.2	72.3	90	60.2	77.3	90
	5'-6"	53.8	52.1	73.8	90	60.7	55.3	56.6	69.0	90	57.4	73.8	90
	5'-9"	51.4	49.8	70.6	90	58.1	52.9	54.1	66.0	90	54.9	70.6	90
	6'-0"	49.3	47.7	67.7	90	55.7	50.7	51.8	63.3	87.4	52.6	67.7	90
13'-0"	4'-0"	71.1	68.8	90	90	80.3	73.1	79.8	91.2	90	75.9	90	90
	4'-3"	66.9	64.8	90	90	75.6	68.8	70.4	85.9	90	71.5	90	90
	4'-6"	63.2	61.2	86.7	90	71.4	65.0	66.5	81.1	90	67.5	86.8	90
	4'-9"	59.4	58.0	82.2	90	67.6	61.5	63.0	76.8	90	63.9	82.2	90
	5'-0"	56.9	55.1	78.1	90	64.2	58.5	59.8	73.0	90	60.7	78.1	90
	5'-3"	54.2	52.5	74.3	90	61.2	55.7	57.0	69.5	90	52.8	74.4	90
	5'-6"	51.7	50.1	71.0	90	58.4	53.1	54.4	66.3	90	55.2	71.0	90
	5'-9"	49.4	47.9	67.9	90	55.9	50.8	52.0	63.5	87.7	52.8	67.9	90
	6'-0"	47.4	45.9	65.1	88.4	53.5	48.7	49.8	60.8	84.0	50.6	65.1	88.5

MULLION SPAN "L"	MULLION DIMENS. "b"	DESIGN LOAD OF ANCHOR BOLTS (psf) POSITIVE OR NEGATIVE											
		CONDITION # 1		CONDITION # 3			CONDITION # 5		CONDITION # 7			CONDITION # 1A/5A	
		OPTIONAL ANCHOR BOLTS TYPE											
		A	B	C	D	E	A1	B1	C	D	E	C	D
13'-6"	4'-0"	68.4	66.3	90	90	77.3	70.4	72.0	87.9	90	73.1	90	90
	4'-3"	64.4	62.4	88.4	90	72.8	66.2	67.8	82.7	90	68.8	88.5	90
	4'-6"	60.8	58.4	83.5	90	68.7	62.6	64.0	78.1	90	65.0	83.6	90
	4'-9"	57.6	55.8	79.1	90	65.1	59.3	60.6	74.0	90	61.6	79.2	90
	5'-0"	54.8	53.0	75.2	90	61.9	56.3	57.6	70.3	90	58.5	75.2	90
	5'-3"	52.1	50.5	71.6	90	58.4	53.6	54.9	66.9	90	55.7	71.6	90
	5'-6"	49.8	48.2	68.3	90	56.2	51.2	52.4	63.9	88.2	53.2	68.4	90
	5'-9"	47.6	46.1	65.4	88.9	53.8	49.0	50.1	61.1	84.4	50.9	65.4	88.9
	6'-0"	45.6	44.2	62.6	85.2	51.6	46.9	48.0	58.6	80.9	48.7	62.7	85.2
14'-0"	4'-0"	66.0	63.9	90	90	74.6	67.9	69.4	84.7	90	70.5	90	90
	4'-3"	62.1	60.2	85.3	90	70.2	63.9	65.3	79.7	90	66.4	85.3	90
	4'-6"	58.7	56.8	80.5	90	66.3	60.3	61.7	75.3	90	62.7	80.6	90

NOTE: MULLION SPAN "L" FOR A GIVEN MULLION DIMENSION "b" SHALL NOT EXCEED MAXIMUN VALUES INDICATED ON SCHEDULE ON SHEET 21.

WALTER A. TILLIT JR., P.E.
STRUCTURAL ENGINEER
FL. LIC.NO. 44167

APR 12 2006

TILTECO INC.

TILLIT TESTING & ENGINEERING COMPANY
6355 NW 36th STREET, STE. 305
MIAMI, FLORIDA 33166
FL E.B. LICENSE No. 0006719

PRODUCT REVISED
as complying with the Florida Building Code
Acceptance No 08-1224.15
Expiration Date 03/04/2011
By Manuel Perez
Miami-Dade Product Control Division

PRODUCT REVISED
as complying with the Florida Building Code
Acceptance No 06-0308.02
Expiration Date 03/04/11
By
Miami-Dade Product Control Division

RESERVED FOR METRO-DADE USE ONLY

YKK ap America
YKK AP AMERICA, INC.
5630 GWALTNEY DRIVE
ATLANTA, GEORGIA 30336

SYSTEM	SCALE
YHC 300 SINGLE GLAZING SYS.	1/2
DESCRIPTION: ANCHOR BOLT GUIDE -SINGLE SPAN-	
DRAWING NUMBER: YHC-300-OG-SL	REV.

APPROVED BY	DRAWN BY	DATE	SHEET NO.
JIA	JIA	8/5/02	22B OF 26

G:\SYSDWGS\YHC3000G\DADE\SINGLE\LARGEMISSILE\YHC300o22B.DWG

REV.	DESCRIPTION	BY	DATE
A	CONDITIONS 1 TO 8 & NEW #1A/5A	L.G.	2/28/06
	+ ANCHOR BOLT SCHEDULE		
B	ANCHOR "F" MIN. E.D. & SPACING	L.G.	4/7/06

YHC 300 O/G TWIN SPAN

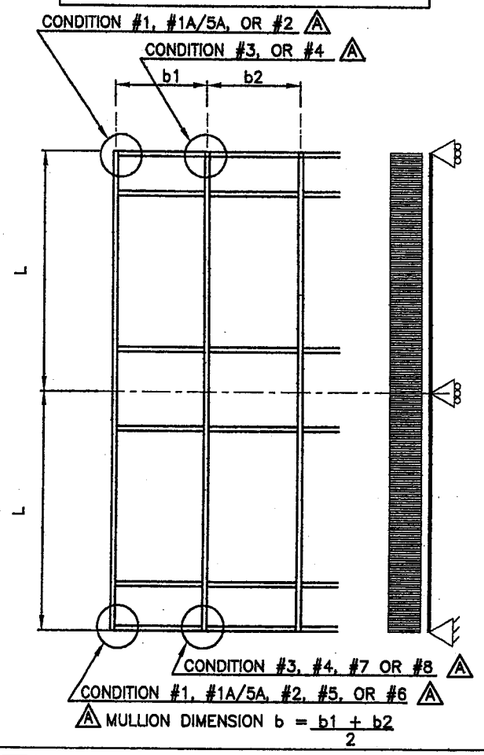

A MULLION DIMENSION $b = \frac{b1 + b2}{2}$

ANCHOR BOLT SCHEDULE A

ALL ANCHOR BOLTS SHALL BE INSTALLED STRICTLY FOLLOWING THE ANCHOR MANUFACTURER'S SPECS AND RECOMMENDATIONS.

ANCHOR BOLT TYPE	DIAMETER & MODEL NAME	MANUFACTURER	Min. EDGE DISTANCE	Min. EMBEDMENT	Min. SPACING	SUBSTRATE
"A"	1/2"ø KWIK BOLT 3	HILTI, INC	3 3/8"	2 1/4"	3" O.C.	f'c=3ksi CONCRETE
"B"	1/2"ø HVA W/ SUPER HAS ROD	HILTI, INC	3"	4 1/4"	3" O.C.	f'c=3ksi CONCRETE
"A1"	1/2"ø KWIK BOLT 3	HILTI, INC	3 3/8"	2 1/4"	3 3/8"	f'c=3ksi CONCRETE
"B1"	1/2"ø HVA W/ SUPER HAS ROD	HILTI, INC	3"	4 1/4"	3 3/8"	f'c=3ksi CONCRETE
"C"	5/8"ø POWER BOLT	POWERS FASTENERS,INC	5"	4"	7 1/2" O.C.	f'c=3ksi CONCRETE
"D"	1/2"ø HVA W/ SUPER HAS ROD	HILTI, INC	5"	4 1/4"	7 1/2" O.C.	f'c=3ksi CONCRETE
"E"	1/2"ø POWER BOLT	POWERS FASTENERS,INC	3 1/2"	4"	7 1/2" O.C.	f'c=3ksi CONCRETE
"F"	1/2"ø BOLT W/ NUT & WASHERS	GRADE 5 STEEL *	A 1"	N/A	A 3" O.C.	1/4" Min. STEEL

* SHALL COMPLY W/ DIN 50018.

CONDITION #8 A

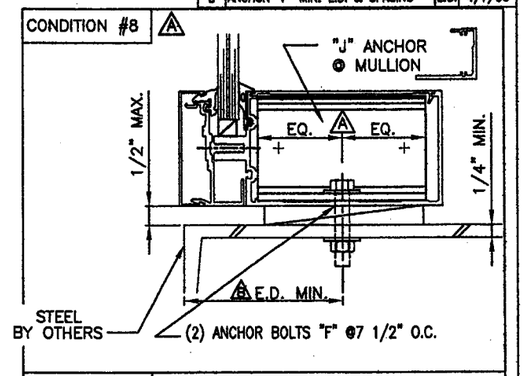

CONDITION #7 A

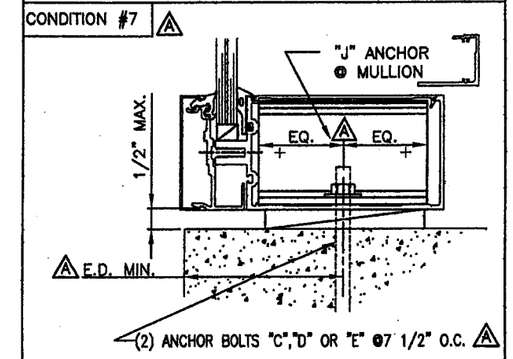

CONDITION #1 A

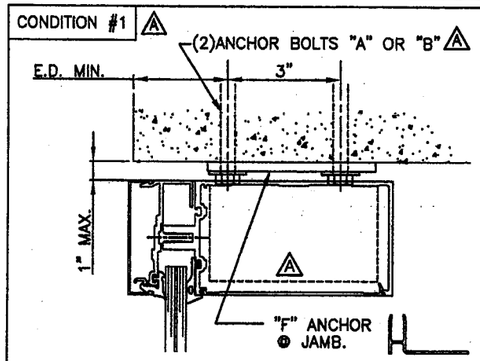

CONDITION #1A/5A A

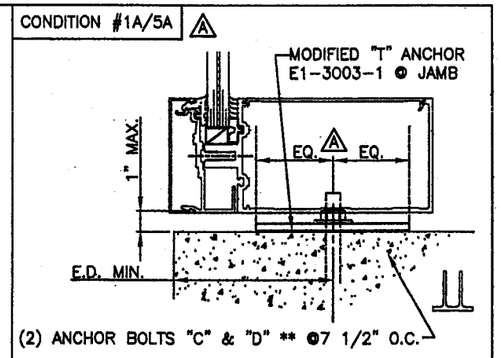

TILTECO INC.

TILLIT TESTING & ENGINEERING COMPANY
6355 NW 36th STREET, STE. 305
MIAMI, FLORIDA 33166
FL E.B. LICENSE No. 0006719

PRODUCT REVISED
as complying with the Florida
Building Code
Acceptance No 06-1224.15
Expiration Date 03/04/2011
By
Miami Dade Product Control
Division

CONDITION #6 A

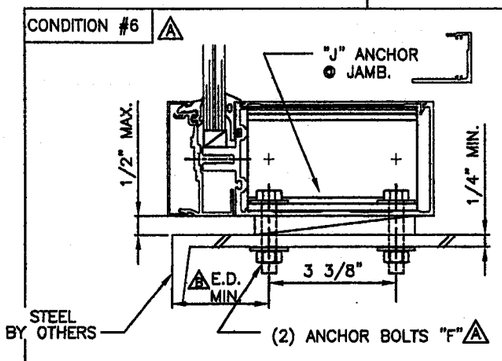

WALTER A. TILLIT JR., P.E.
STRUCTURAL ENGINEER
FL. LIC.NO. 44167

APR 12 2006

PRODUCT REVISED
as complying with the Florida
Building Code
Acceptance No 06-0306.02
Expiration Date 03/04/11
By
Miami Dade Product Control
Division

CONDITION #2 A

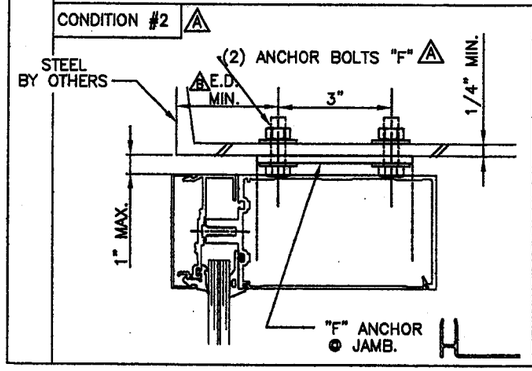

CONDITION #3 A

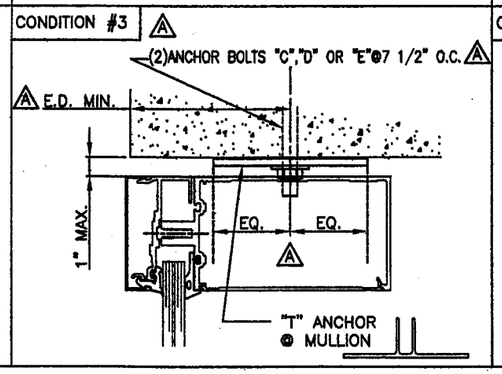

CONDITION #4 A

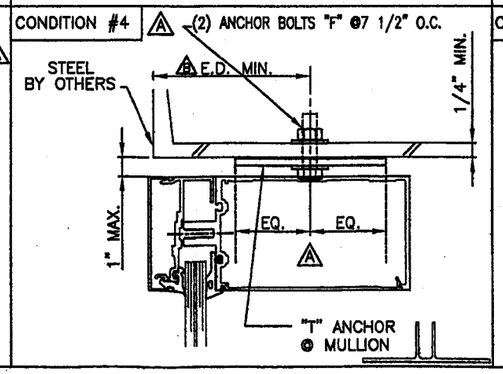

CONDITION #5 A

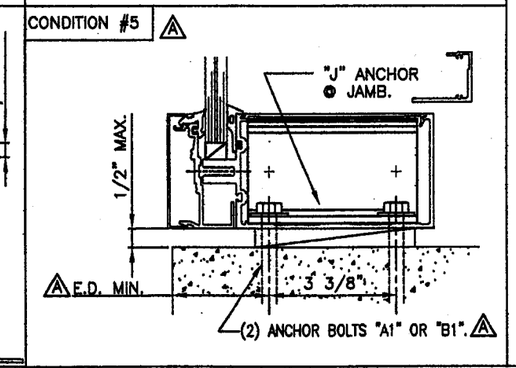

RESERVED FOR METRO-DADE USE ONLY

YKK AP America

YKK AP AMERICA, INC.
5630 GWALTNEY DRIVE
ATLANTA, GEORGIA 30336

SYSTEM	SCALE
YHC 300 SINGLE GLAZING	1/2

DESCRIPTION: ANCHOR BOLT GUIDE -TWIN SPAN-

DRAWING NUMBER	REV.
YHC-300-OG-SL	A

APPROVED BY	DRAWN BY	DATE	SHEET NO.
JIA	JIA	8/5/02	23 of 26

G:\SYSDWGS\YHC300OG\DADE\SINGLE\LARGEMISSILE\YHC300p23.DWG

ANCHOR BOLT'S PRESSURE RATING : TWIN SPAN

		DESIGN LOAD OF ANCHOR BOLTS (psf) POSITIVE OR NEGATIVE											
		CONDITION # 1		CONDITION # 3			CONDITION # 5		CONDITION # 7			CONDITION # 1A/5A	
MULLION SPAN "L"	MULLION DIMENS. "b"	OPTIONAL ANCHOR BOLTS TYPE											
		A	B	C	D	E	A1	B1	C	D	E	C	D
8'-6"	6'-0"	90	90	90	90	90	90	90	90	90	90	90	90
9'-0"	5'-9"	90	90	90	90	90	90	90	90	90	90	90	90
	6'-0"	90	88.4	90	90	90	90	90	90	90	90	90	90
9'-6"	5'-6"	90	90	90	90	90	90	90	90	90	90	90	90
	5'-9"	90	87.4	90	90	90	90	90	90	90	90	90	90
	6'-0	86.5	83.7	90	90	90	89.1	89.1	90	90	90	90	90
10'-0"	5'-3"	90	90	90	90	90	90	90	90	90	90	90	90
	5'-6"	89.6	86.8	90	90	90	90	90	90	90	90	90	90
	5'-9"	85.7	83.0	90	90	90	88.1	90	90	90	90	90	90
	6'-0"	82.1	79.6	90	90	90	84.4	86.4	90	90	87.9	90	90
10'-6"	5'-0"	90	90	90	90	90	90	90	90	90	90	90	90
	5'-3"	89.4	86.6	90	90	90	90	90	90	90	90	90	90
	5'-6"	85.3	82.7	90	90	90	87.7	89.8	90	90	90	90	90
	5'-9"	81.6	79.1	90	90	90	83.9	85.9	90	90	87.2	90	90
	6'-0"	78.2	75.8	90	90	88.4	80.4	82.3	90	90	83.6	90	90
11'-0"	4'-9"	90	90	90	90	90	90	90	90	90	90	90	90
	5'-0"	89.6	86.8	90	90	90	90	90	90	90	90	90	90
	5'-3"	85.3	82.7	90	90	90	87.7	89.8	90	90	90	90	90
	5'-6"	81.5	78.9	90	90	90	83.7	85.7	90	90	87.0	90	90
	5'-9"	77.9	75.5	90	90	88	80.1	82.0	90	90	83.2	90	90
	6'-0"	74.7	72.3	90	90	84.4	76.8	78.5	90	90	74.8	90	90
11'-6"	4'-9"	90	87.4	90	90	90	90	90	90	90	90	90	90
	5'-0"	85.7	83.0	90	90	90	88.1	90	90	90	90	90	90
	5'-3"	81.6	79.1	90	90	90	83.9	85.9	90	90	87.2	90	90
	5'-6"	77.9	75.5	90	90	88.0	80.1	82.0	90	90	83.2	90	90
	5'-9"	74.5	72.2	90	90	84.2	76.6	78.4	90	90	79.6	90	90
	6'-0"	71.4	69.2	90	90	80.7	73.4	75.1	90	90	76.3	90	90
12'-0"	4'-6"	90	88.4	90	90	90	90	90	90	90	90	90	90
	4'-9"	86.5	83.7	90	90	90	88.9	90	90	90	90	90	90
	5'-0"	82.1	79.6	90	90	90	84.4	86.4	90	90	87.7	90	90
	5'-3"	78.2	75.8	90	90	88.4	80.4	82.3	90	90	83.6	90	90
	5'-6"	74.7	72.3	90	90	84.4	76.8	78.5	90	90	79.8	90	90
	5'-9"	71.4	69.2	90	90	80.7	73.4	75.1	90	90	76.3	90	90
	6'-0"	68.4	66.3	90	90	77.3	70.4	72.0	89.9	90	73.1	90	90
12'-6"	4'-3"	90	89.9	90	90	90	95.4	90	90	90	90	90	90
	4'-6"	87.6	84.9	90	90	90	90.1	90	90	90	90	90	90
	4'-9"	83.0	80.4	90	90	90	85.3	87.3	90	90	88.7	90	90
	5'-0"	78.8	76.4	90	90	89.1	81.1	82.9	90	90	84.2	90	90
	5'-3"	75.1	72.7	90	90	84.8	77.2	79.0	90	90	80.2	90	90
	5'-6"	71.7	69.4	90	90	81.0	73.7	75.4	90	90	76.6	90	90
	5'-9"	68.6	66.4	90	90	77.5	70.5	72.1	88.0	90	73.2	90	90
	6'-0"	65.7	63.6	90	90	74.2	67.6	69.1	84.3	90	70.2	90	90

		DESIGN LOAD OF ANCHOR BOLTS (psf) POSITIVE OR NEGATIVE											
		CONDITION # 1		CONDITION # 3			CONDITION # 5		CONDITION # 7			CONDITION # 1A/5A	
MULLION SPAN "L"	MULLION DIMENS. "b"	OPTIONAL ANCHOR BOLTS TYPE											
		A	B	C	D	E	A1	B1	C	D	E	C	D
13'-0"	4'-0"	90	90	90	90	90	97.4	90	90	90	90	90	90
	4'-3"	89.2	86.4	90	90	90	91.7	90	90	90	90	90	90
	4'-6"	84.2	81.6	90	90	90	86.6	88.6	90	90	90	90	90
	4'-9"	79.8	77.3	90	90	90	82.2	84.0	90	90	85.2	90	90
	5'-0"	75.8	73.4	90	90	85.7	77.9	79.8	90	90	81.0	90	90
	5'-3"	72.2	69.9	90	90	81.6	74.2	76.0	90	90	77.1	90	90
	5'-6"	68.9	66.8	90	90	77.9	70.9	72.5	88.5	90	73.6	90	90
	5'-9"	65.9	63.9	90	90	74.5	67.8	69.4	84.6	90	70.4	90	90
	6'-0"	63.2	61.2	86.7	90	71.4	65.0	66.5	81.1	90	67.5	86.8	90
13'-6"	4'-0"	90	88.4	90	90	90	90	90	90	90	90	90	90
	4'-3"	85.9	83.2	90	90	90	88.3	90	90	90	90	90	90
	4'-6"	81.1	78.6	90	90	90	83.4	85.3	90	90	86.7	90	90
	4'-9"	76.8	74.4	90	90	86.8	79.0	80.8	90	90	82.1	90	90
	5'-0"	73.0	70.7	90	90	82.5	75.1	76.8	90	90	78.0	90	90
	5'-3"	69.5	67.3	90	90	78.6	71.5	73.1	89.2	90	74.3	90	90
	5'-6"	66.4	64.3	87.2	90	75.0	68.2	69.8	85.2	90	70.9	90	90
	5'-9"	63.5	61.5	83.5	90	71.7	65.3	66.8	81.5	90	67.8	87.2	90
	6'-0"	60.8	58.9	90	90	68.7	62.6	64.0	78.1	90	65.0	83.6	90
14'-0"	3'-9"	90	90	90	90	90	90	90	90	90	90	90	90
	4'-0"	88.0	85.2	90	90	90	90	90	90	90	90	90	90
	4'-3"	82.8	80.2	90	90	90	85.2	87.1	90	90	88.5	90	90
	4'-6"	78.2	75.8	90	90	88.4	80.4	82.3	90	90	83.6	90	90
	4'-9"	74.1	71.8	90	90	83.7	76.2	78.0	90	90	79.2	90	90
	5'-0"	70.4	68.2	90	90	79.5	72.4	74.1	90	90	75.2	90	90
	5'-3"	67.0	64.9	90	90	75.8	68.9	70.5	86.1	90	71.6	90	90
	5'-6"	64.0	62.0	89.9	90	72.3	65.8	67.3	82.1	90	68.4	87.9	90
	5'-9"	61.2	59.3	84	90	69.2	62.9	64.4	78.6	90	65.4	84.1	90
	6'-0"	58.7	56.8	80.5	90	66.3	60.3	61.7	75.3	90	62.7	80.6	90

NOTE: MULLION SPAN "L" FOR A GIVEN MULLION DIMENSION "b" SHALL NOT EXCEED MAXIMUN VALUES INDICATED ON SCHEDULE ON SHEET 21.

WALTER A. TILLIT JR., P.E.
STRUCTURAL ENGINEER
FL. LIC.NO. 44167

APR 12 2006

PRODUCT REVISED
as complying with the Florida Building Code
Acceptance No 08-1224.15
Expiration Date 03/04/2011
By Manuel Perez
Miami-Dade Product Control Division

REV.	DESCRIPTION	BY	DATE

TILTECO INC.

TILLIT TESTING & ENGINEERING COMPANY
6355 NW 36th STREET, STE. 305
MIAMI, FLORIDA 33166
FL E.B. LICENSE No. 0006719

PRODUCT REVISED
as complying with the Florida Building Code
Acceptance No 06-0306.02
Expiration Date 03/04/11
By
Miami-Dade Product Control Division

RESERVED FOR METRO-DADE USE ONLY

YKK ap America

YKK AP AMERICA, INC.
5630 GWALTNEY DRIVE
ATLANTA, GEORGIA 30336

SYSTEM	SCALE
YHC 300 SINGLE GLAZING	1/2
DESCRIPTION: ANCHOR BOLT GUIDE -TWIN SPAN-	
DRAWING NUMBER: YHC-300-OG-SL	REV.

APPROVED BY	DRAWN BY	DATE	SHEET NO.
JIA	JIA	8/5/02	23A of 26

G:\SYSDWGS\YHC3000G\DADE\SINGLE\LARGEMISSILE\YHC300p23A.DWG

MAXIMUM DESIGN WIND LOAD "W" (psf) SCHEDULE FOR A GIVEN GLASS TYPE AND GLASS PANEL DIMENSIONS WIDTH "b" (in) x LENGTH "a" (in)

REV.	DESCRIPTION	BY	DATE
B	ASTM E 1300-98	L.G.	4/17/06

GLASS TYPE "A1"

WIDTH "b"	LENGTH "a"	MAXIMUM DESIGN LOAD "W"
24"	from 24" to 42"	±90.0
	48"	±81.0
	54"	±75.0
	60"	±70.0
	66"	±66.0
	72"	±63.0
	78"	±61.0
	84"	±59.0
	90"	±58.0
	96"	±57.0
	102"	±56.0
	108"	±55.0
	114"	±54.0
	120"	±53.0
30"	30"	±90.0
	36"	±84.9
	42"	±73.2
	48"	±62.4
	54"	±55.8
	60"	±50.3
	66"	±47.0
	72"	±43.9
	78"	±41.4
	84"	±39.9
	90"	±38.7
	96"	±37.6
	102"	±36.7
	108"	±36.0
	114"	±35.3
	120"	±34.7

WIDTH "b"	LENGTH "a"	MAXIMUM DESIGN LOAD "W"
36"	36"	±74.0
	42"	±62.9
	48"	±55.4
	54"	±49.2
	60"	±43.7
	66"	±39.6
	72"	±36.2
	78"	±32.5
	84"	±30.3
	90"	±28.9
	96"	±27.6
	102"	±26.4
	108"	±25.6
	114"	±25.0
	120"	±24.4
42"	42"	±57.2
	48"	±50.6
	54"	±45.8
	60"	±40.7
	66"	±37.1
	72"	±33.2
	78"	±30.0
	84"	±27.3
	90"	±25.2
	96"	±23.4
	102"	±21.9
	108"	±20.7
	114"	±20.0
	120"	±19.3

WIDTH "b"	LENGTH "a"	MAXIMUM DESIGN LOAD "W"
48"	48"	±47.3
	54"	±42.2
	60"	±39.2
	66"	±35.4
	72"	±31.9
	78"	±29.1
	84"	±26.5
	90"	±24.4
	96"	±22.4
	102"	±20.6
	108"	±19.3
	112"	±18.5
54"	54"	±39.8
	60"	±36.6
	66"	±33.7
	72"	±30.5
	78"	±28.2
	84"	±25.9
	90"	±24.0
	96"	±22.1
	100"	±20.8
60"	60"	±34.3
	66"	±31.1
	72"	±29.1
	78"	±27.0
	84"	±25.0
	90"	±23.6
66"	66"	±29.4
	72"	±27.3
	78"	±25.5
	82"	±24.6
72"	72"	±25.6
	75"	±24.8

GLASS TYPE "A2"

WIDTH "b"	LENGTH "a"	MAXIMUM DESIGN LOAD "W"
24"	from 24" to 120"	±90.0
30"	from 30" to 66"	±90.0
	72"	±87.8
	78"	±82.8
	84"	±79.9
	90"	±77.4
	96"	±75.3
	102"	±73.5
	108"	±72.0
	114"	±70.6
	120"	±69.4
36"	from 36" to 54"	±90.0
	60"	±87.4
	66"	±79.3
	72"	±72.4
	78"	±65.1
	84"	±60.6
	90"	±57.9
	96"	±55.2
	102"	±52.9
	108"	±51.2
	114"	±50.0
	120"	±48.9
42"	from 42" to 54"	±90.0
	60"	±81.4
	66"	±74.3
	72"	±66.5
	78"	±60.1
	84"	±54.6
	90"	±50.4
	96"	±46.9
	102"	±43.9
	108"	±41.5
	114"	±40.0
	120"	±38.7

WIDTH "b"	LENGTH "a"	MAXIMUM DESIGN LOAD "W"
48"	48"	±90.0
	54"	±84.5
	60"	±78.4
	66"	±70.9
	72"	±63.9
	78"	±58.2
	84"	±53.1
	90"	±48.9
	96"	±44.8
	102"	±41.2
	108"	±38.6
	112"	±37.1
54"	54"	±79.6
	60"	±73.2
	66"	±67.4
	72"	±61.1
	78"	±56.5
	84"	±51.8
	90"	±48.1
	96"	±44.3
	100"	±41.6
60"	60"	±68.5
	66"	±62.3
	72"	±58.3
	78"	±54.0
	84"	±50.1
	90"	±47.2
66"	66"	±58.9
	72"	±54.6
	78"	±51.0
	82"	±49.2
72"	72"	±51.3
	75"	±49.7

GLASS TYPE "A3"

WIDTH "b"	LENGTH "a"	MAXIMUM DESIGN LOAD "W"
24"	from 24" to 120"	±90.0
30"	from 30" to 120"	±90.0
36"	from 36" to 120"	±90.0
42"	from 42" to 96"	±90.0
	102"	±87.8
	108"	±82.9
	114"	±80.1
	120"	±77.4

WIDTH "b"	LENGTH "a"	MAXIMUM DESIGN LOAD "W"
48"	from 48" to 89"	±90.0
	96"	±89.6
	102"	±82.3
	108"	±77.1
	112"	±74.2
54"	from 54" to 90"	±90.0
	96"	±89.6
	100"	±83.2
57"	from 57" to 95"	±90.0
60"	from 60" to 90"	±90.0
66"	from 60" to 82"	±90.0
72"	from 72" to 75"	±90.0

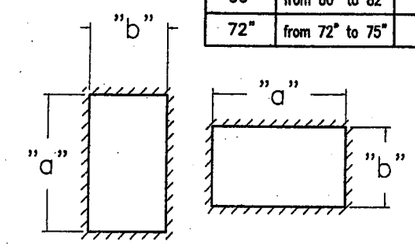

a ≥ b ALWAYS

GLASS PANEL SCHEDULE LEGEND

DIM. a & b REFER TO D.L.O. ON SHOP DRAWINGS.

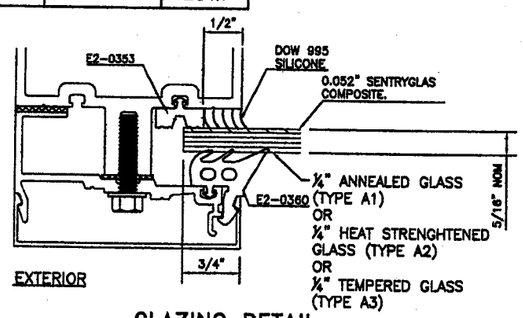

GLAZING DETAIL FOR GLASS TYPES "A1", "A2" & "A3"

B ASTM E 1300-98

PRODUCT REVISED
as complying with the Florida Building Code
Acceptance No 08-1224.15
Expiration Date 03/04/2011
By Miami-Dade Product Control Division

PRODUCT REVISED
as complying with the Florida Building Code
Acceptance No 06-0306.02
Expiration Date 03/04/11
By Miami-Dade Product Control Division

WALTER A. TILLIT JR., P.E.
STRUCTURAL ENGINEER
FL. LIC.NO. 44167

APR 12 2006

TILTECO INC.
TILLIT TESTING & ENGINEERING COMPANY
6355 NW 36th STREET, STE. 305
MIAMI, FLORIDA 33166
FL E.B. LICENSE No. 0006719

RESERVED FOR METRO-DADE USE ONLY

YKK AP America
YKK AP AMERICA, INC.
5630 GWALTNEY DRIVE
ATLANTA, GEORGIA 30336

SYSTEM	SCALE
YHC 300 SINGLE GLAZING SYSTEM	1/2

DESCRIPTION: GLASS CAPACITY CHARTS

DRAWING NUMBER	REV.
YHC-300-OG-SL	

APPROVED BY	DRAWN BY	DATE	SHEET NO.
JIA	JIA	8/5/02	24 of 26

G:\SYSDWGS\YHC300OG\DADE\SINGLE\LARGEMISSILE\YHC300p24.DWG

REV.	DESCRIPTION	BY	DATE
B	ASTM E 1300-98	L.G.	4/7/06

MAXIMUM DESIGN WIND LOAD "W" (psf) SCHEDULE FOR A GIVEN GLASS TYPE AND GLASS PANEL DIMENSIONS WIDTH "b" (in) x LENGTH "a" (in)

GLASS TYPE "E1"

WIDTH "b"	LENGTH "a"	MAXIMUM DESIGN LOAD "W"
24"	from 24" to 120"	±90.0
30"	from 30" to 60"	±90.0
	66"	±89.3
	72"	±84.2
	78"	±79.9
	84"	±77.0
	90"	±74.9
	96"	±73.1
	102"	±71.6
	108"	±70.2
	114"	±68.9
	120"	±67.8
36"	from 36" to 48"	±90.0
	54"	±79.8
	60"	±72.7
	66"	±66.9
	72"	±62.1
	78"	±59.3
	84"	±56.7
	90"	±54.5
	96"	±52.7
	102"	±51.0
	108"	±49.6
	114"	±48.3
	120"	±47.2
42"	42"	±87.6
	48"	±75.4
	54"	±66.4
	60"	±60.1
	66"	±55.1
	72"	±50.8
	78"	±46.9
	84"	±44.4
	90"	±42.2
	96"	±40.3
	102"	±38.7
	108"	±37.6
	114"	±36.6
	120"	±35.7

WIDTH "b"	LENGTH "a"	MAXIMUM DESIGN LOAD "W"
48"	48"	±66.6
	54"	±58.9
	60"	±53.3
	66"	±47.3
	72"	±43.5
	78"	±40.1
	84"	±37.3
	90"	±35.5
	96"	±33.6
	102"	±31.8
	108"	±30.5
	112"	±29.5
54"	54"	±53.9
	60"	±47.6
	66"	±43.6
	72"	±39.6
	78"	±36.8
	84"	±34.0
	90"	±31.4
	96"	±29.7
	100"	±28.7
60"	60"	±52.7
	66"	±47.7
	72"	±44.2
	78"	±40.9
	84"	±37.5
	90"	±35.3
66"	66"	±44.6
	72"	±41.1
	78"	±37.9
	82"	±36.6
72"	72"	±38.3
	75"	±37.0

GLASS TYPE "E2"

WIDTH "b"	LENGTH "a"	MAXIMUM DESIGN LOAD "W"
24"	from 24" to 120"	±90.0
30"	from 30" to 120"	±90.0
36"	from 36" to 118"	±90.0
42"	from 42" to 78"	±90.0
	84"	±88.7
	90"	±84.5
	96"	±80.6
	102"	±77.5
	108"	±75.2
	114"	±73.2
	120"	±71.5
48"	from 48" to 66"	±90.0
	72"	±87.0
	78"	±80.2
	84"	±74.5
	90"	±70.9
	96"	±67.1
	102"	±63.6
	108"	±60.9
	112"	±59.0
54"	from 54" to 60"	±90.0
	66"	±87.2
	72"	±79.3
	78"	±73.5
	84"	±68.0
	90"	±62.8
	96"	±59.4
	100"	±57.4
60"	from 60" to 66"	±90.0
	72"	±88.5
	78"	±81.9
	84"	±74.9
	90"	±70.6
66"	66"	±89.3
	72"	±82.2
	78"	±75.7
	82"	±73.2
72"	72"	±76.6
	75"	±74.0

GLASS TYPE "E3"

WIDTH "b"	LENGTH "a"	MAXIMUM DESIGN LOAD "W"
24"	from 24" to 120"	±90.0
30"	from 30" to 120"	±90.0
36"	from 36" to 120"	±90.0
42"	from 42" to 120"	±90.0
48"	from 48" to 112"	±90.0
54"	from 54" to 100"	±90.0
60"	from 60" to 90"	±90.0
66"	from 66" to 82"	±90.0
72"	from 72" to 75"	±90.0

TILTECO INC.
TILLIT TESTING & ENGINEERING COMPANY
6355 NW 36th STREET, STE. 305
MIAMI, FLORIDA 33166
FL E.B. LICENSE No. 0000719

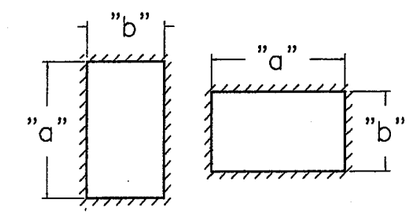

a ≥ b ALWAYS

GLASS PANEL SCHEDULE LEGEND

DIM. a & b REFER TO D.L.O. ON SHOP DRAWINGS.

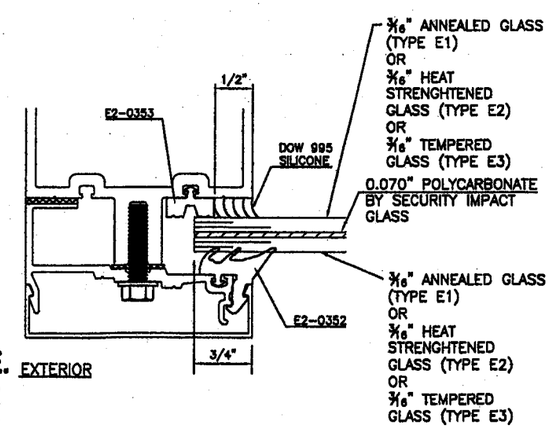

GLAZING DETAIL

FOR GLASS TYPES "E1", "E2", & "E3"

B ASTM E 1300-98

WALTER A. TILLIT JR., P.E.
STRUCTURAL ENGINEER
FL. LIC.NO. 44167

APR 12 2006

PRODUCT REVISED
as complying with the Florida
Building Code
Acceptance No 08-1224.15
Expiration Date 03/04/2011
By Miami Dade Product Control
Division

PRODUCT REVISED
as complying with the Florida
Building Code
Acceptance No 06-0304.02
Expiration Date 03/04/11
By Miami Dade Product Control
Division

RESERVED FOR METRO-DADE USE ONLY

YKK ap America
YKK AP AMERICA, INC.
5630 GWALTNEY DRIVE
ATLANTA, GEORGIA 30336

SYSTEM	SCALE
YHC 300 SINGLE GLAZING SYSTEM	1/2

DESCRIPTION: GLASS CAPACITY CHARTS

DRAWING NUMBER	REV.
YHC-300-OG-SL	

APPROVED BY	DRAWN BY	DATE	SHEET NO.
JIA	JIA	8/5/02	25 of 26

G:\SYSDWGS\YHC3000G\DADE\SINGLE\LARGEMISSILE\YHC300p25.DWG

REV.	DESCRIPTION	BY	DATE
B	ASTM E 1300-98	L.G.	4/7/06

MAXIMUM DESIGN WIND LOAD "W" (psf) SCHEDULE FOR A GIVEN GLASS TYPE AND GLASS PANEL DIMENSIONS WIDTH "b" (in) x LENGTH "a" (in)

GLASS TYPE "F1"

WIDTH "b"	LENGTH "a"	MAXIMUM DESIGN LOAD "W"
24"	from 24" to 120"	±90.0
30"	from 30" to 120"	±90.0
36"	from 36" to 96"	±90.0
	102"	±89.5
	108"	±87.1
	114"	±85.0
	120"	±83.1
42"	from 42" to 66"	±90.0
	72"	±86.9
	78"	±80.5
	84"	±76.0
	90"	±72.7
	96"	±69.8
	102"	±67.3
	108"	±65.1
	114"	±63.1
	120"	±61.7
48"	from 48" to 54"	±90.0
	60"	±87.6
	66"	±78.1
	72"	±72.3
	78"	±67.1
	84"	±62.3
	90"	±59.5
	96"	±56.8
	102"	±54.5
	108"	±52.4
	112"	±51.2

WIDTH "b"	LENGTH "a"	MAXIMUM DESIGN LOAD "W"
54"	54"	±86.1
	60"	±75.6
	66"	±68.6
	72"	±62.3
	78"	±58.2
	84"	±54.4
	90"	±50.8
	96"	±47.5
	100"	±46.0
60"	60"	±67.1
	66"	±60.7
	72"	±56.0
	78"	±51.3
	84"	±47.1
	90"	±44.2
66"	66"	±56.1
	72"	±51.0
	78"	±46.2
	82"	±44.2
72"	72"	±56.6
	75"	±54.3

GLASS TYPES "F2", & "G"

WIDTH "b"	LENGTH "a"	MAXIMUM DESIGN LOAD "W"
24"	from 24" to 120"	±90.0
30"	from 30" to 120"	±90.0
36"	from 36" to 120"	±90.0
42"	from 42" to 120"	±90.0
48"	from 48" to 112"	±90.0
54"	from 54" to 100"	±90.0
60"	from 60" to 84"	±90.0
	90"	±85.5
66"	from 66" to 78"	±90.0
	82"	±88.5
72"	from 72" to 75"	±90.0

GLASS TYPE "F3"

WIDTH "b"	LENGTH "a"	MAXIMUM DESIGN LOAD "W"
24"	from 24" to 120"	±90.0
30"	from 30" to 120"	±90.0
36"	from 36" to 120"	±90.0
42"	from 42" to 120"	±90.0
48"	from 48" to 112"	±90.0
54"	from 54" to 100"	±90.0
57"	from 57" to 95"	±90.0
60"	from 60" to 90"	±90.0
66"	from 66" to 82"	±90.0
72"	from 72" to 75"	±90.0

TILTECO INC.

TILLIT TESTING & ENGINEERING COMPANY
6355 NW 36th STREET, STE. 305
MIAMI, FLORIDA 33166
FL E.B. LICENSE No. 0006719

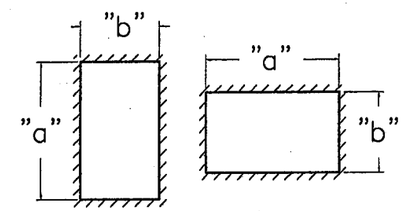

a ≥ b ALWAYS

GLASS PANEL SCHEDULE LEGEND

DIM. a & b REFER TO D.L.O. ON SHOP DRAWINGS.

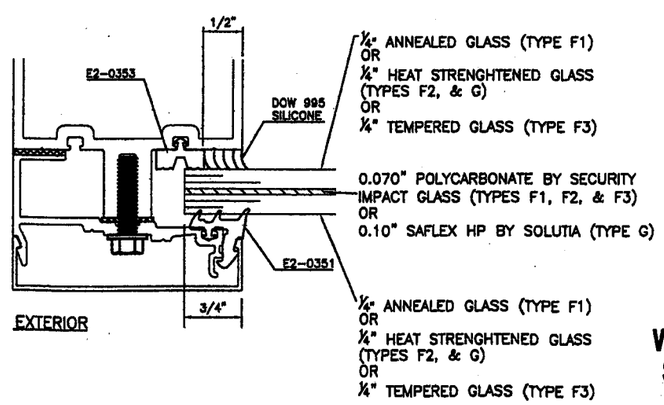

GLAZING DETAIL

FOR GLASS TYPES "F1", "F2", "F3", & "G"

B ASTM E 1300-98

WALTER A. TILLIT JR., P.E.
STRUCTURAL ENGINEER
FL. LIC.NO. 44167

APR 12 2006

PRODUCT REVISED
as complying with the Florida Building Code
Acceptance No 06-0306.02
Expiration Date 03/04/11
By
Miami Dade Product Control Division

PRODUCT REVISED
as complying with the Florida Building Code
Acceptance No 08-1224.15
Expiration Date 03/04/2011
By
Miami Dade Product Control Division

RESERVED FOR METRO-DADE USE ONLY

YKK AP America

YKK AP AMERICA, INC.
5630 GWALTNEY DRIVE
ATLANTA, GEORGIA 30336

SYSTEM	SCALE
YHC 300 SINGLE GLAZING SYSTEM	1/2

DESCRIPTION: GLASS CAPACITY CHARTS

DRAWING NUMBER	REV.
YHC-300-OG-SL	

APPROVED BY	DRAWN BY	DATE	SHEET NO.
JIA	JIA	8/5/02	26 of 26

G:\SYSDWGS\YHC3000G\DADE\SINGLE\LARGEMISSILE\YHC300p26.DWG